THANG LE, S.E.
STRUCTURAL ENGINEER
Phone: (626) 731-1539 Fax: (626) 447-3400

SUPPLEMENTAL STRUCTURAL CALCULATIONS

FOR

ESSEX TOWER
44948 10TH STREET WEST
LANCASTER, CA 93534

August 13, 2021

THANG LE, S.E.
STRUCTURAL ENGINEER
Phone: (626) 731-1539 Fax: (626) 447-3400

ESSEX TOWER
44948 10TH STREET WEST
LANCASTER, CA 93534

TABLE OF CONTENTS

I.	DESIGN CRITERIA	A1 --- A2
II.	WOOD FRAMING	B1 --- B32
III.	WOOD LATERAL ANALYSIS	C1 --- C41
IV.	TWO – WAY SLAB	D1 --- D74
V.	CONCRETE COLUMN	E1 --- E24
VI.	FOUNDATION	F1 --- F50
VII.	CONCRETE LATERAL ANALYSIS	G1 --- G86
VII.	MISCELLANEOUS	H1 --- H1

THANG LE, S.E.
STRUCTURAL ENGINEER
Phone: (626) 731-1539 Fax: (626) 447-3400

DESIGN CRITERIA

THANG LE & ASSOCIATES
STRUCTURAL ENGINEERS, INC.

319 E. Foothill Blvd., Arcadia, CA 91006 - Suite C

Phone: (626) 538-2702

Project: Essex Tower

DESIGN CRITERIA

CODE: 2019 CALIFORNIA BUILDING CODE WITH LOCAL ADDENDA
Seismic Design Category: E
Wind: 95 mph Exp. C

FOUNDATION:

SITE CLASS :	D	
Sds :	1.200	g
S1 :	0.6	g
ALLOWABLE BEARING CAPACITY =	2,000	PSF

MATERIALS:

CONC. SLAB:	F'c =	4,000	PSI
CONC. WALL:	F'c =	3,000	PSI
CONC. COLUMN:	F'c =	4,000	PSI
CMU WALL:	F'c =	1,500	PSI
STEEL:	A36 - WELDING :	INSPECTED	
	TUBES - A500 GRADE B		
	BOLTS - A307		
WOOD:	STUDS, JOISTS :	DF #2	U.O.N.
	BEAMS, POSTS :	DF #1	U.O.N.

LOADING:

		JOIST		BEAM	
ROOF:	ROOFING =	4.5	PSF	4.5	PSF
	1/2" SHEATHING =	2.0	PSF	2.0	PSF
	FRAMING =	3.0	PSF	4.0	PSF
	INSULATION =	0.5	PSF	0.5	PSF
	2-LAYERS OF GYB. =	6.0	PSF	6.0	PSF
	MISC =	1.0	PSF	3.0	PSF
	DL =	**17.0**	**PSF**	**20.0**	**PSF**
	LL =	**20.0**	**PSF**	**20.0**	**PSF**
	Wall DL =	**6.0**	**PSF**		
	SEISMIC DL =	**23.0**	**PSF**		
	LL REDUCTION (SLAB) =	**12.0**	**PSF**		

		JOIST		BEAM	
FLOOR:	FLOORING =	5.0	PSF	4.0	PSF
	L.W. CONCRETE =	10.0	PSF	14.5	PSF
	3/4" SHEATHING =	3.0	PSF	3.0	PSF
	FRAMING =	3.0	PSF	3.5	PSF
	2-LAYERS OF GYB. =	6.0	PSF	6.0	PSF
	MISC =	2.5	PSF	1.5	PSF
	DL =	**29.5**	**PSF**	**32.5**	**PSF**
	LL =	**40.0**	**PSF**	**40.0**	**PSF**
	WALL DL =	**12.0**	**PSF**		
	SEISMIC DL =	**41.5**	**PSF**		

PODIUM:	12" CONC. SLAB =	150.0	PSF
(WORST CASE)	MISC =	5.0	PSF
	DL =	**155.0**	**PSF**
	SUPERIMPOSED DL =	**75.5**	**PSF**
	SUPERIMPOSED LL =	**76.0**	**PSF**

A2

44948 10th St W, Lancaster, CA 93534, USA

Latitude, Longitude: 34.7004966, -118.1476057

Date	12/11/2020, 4:57:28 PM
Design Code Reference Document	ASCE7-16
Risk Category	II
Site Class	D - Default (See Section 11.4.3)

Type	Value	Description
S_S	1.5	MCE_R ground motion. (for 0.2 second period)
S_1	0.6	MCE_R ground motion. (for 1.0s period)
S_{MS}	1.8	Site-modified spectral acceleration value
S_{M1}	null -See Section 11.4.8	Site-modified spectral acceleration value
S_{DS}	1.2	Numeric seismic design value at 0.2 second SA
S_{D1}	null -See Section 11.4.8	Numeric seismic design value at 1.0 second SA

Type	Value	Description
SDC	null -See Section 11.4.8	Seismic design category
F_a	1.2	Site amplification factor at 0.2 second
F_v	null -See Section 11.4.8	Site amplification factor at 1.0 second
PGA	0.563	MCE_G peak ground acceleration
F_{PGA}	1.2	Site amplification factor at PGA
PGA_M	0.676	Site modified peak ground acceleration
T_L	12	Long-period transition period in seconds
SsRT	1.552	Probabilistic risk-targeted ground motion. (0.2 second)
SsUH	1.742	Factored uniform-hazard (2% probability of exceedance in 50 years) spectral acceleration
SsD	1.5	Factored deterministic acceleration value. (0.2 second)
S1RT	0.638	Probabilistic risk-targeted ground motion. (1.0 second)
S1UH	0.723	Factored uniform-hazard (2% probability of exceedance in 50 years) spectral acceleration.
S1D	0.6	Factored deterministic acceleration value. (1.0 second)
PGAd	0.563	Factored deterministic acceleration value. (Peak Ground Acceleration)
C_{RS}	0.891	Mapped value of the risk coefficient at short periods
C_{R1}	0.883	Mapped value of the risk coefficient at a period of 1 s

THANG LE, S.E.
STRUCTURAL ENGINEER
Phone: (626) 731-1539 Fax: (626) 447-3400

ROOF & FLOOR FRAMING DESIGN

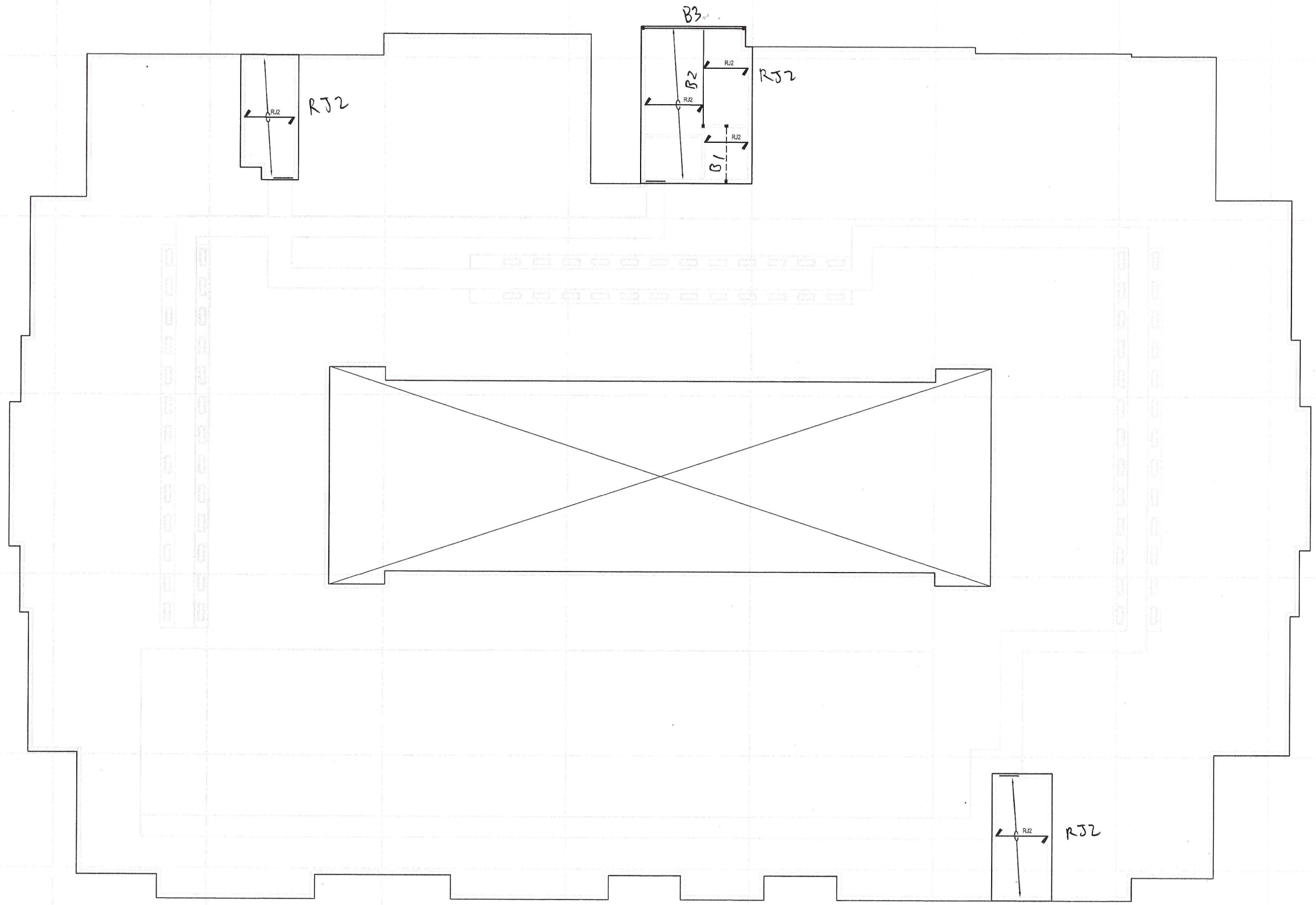

ROOF BULKHEAD FRAMING ID MAP

B1

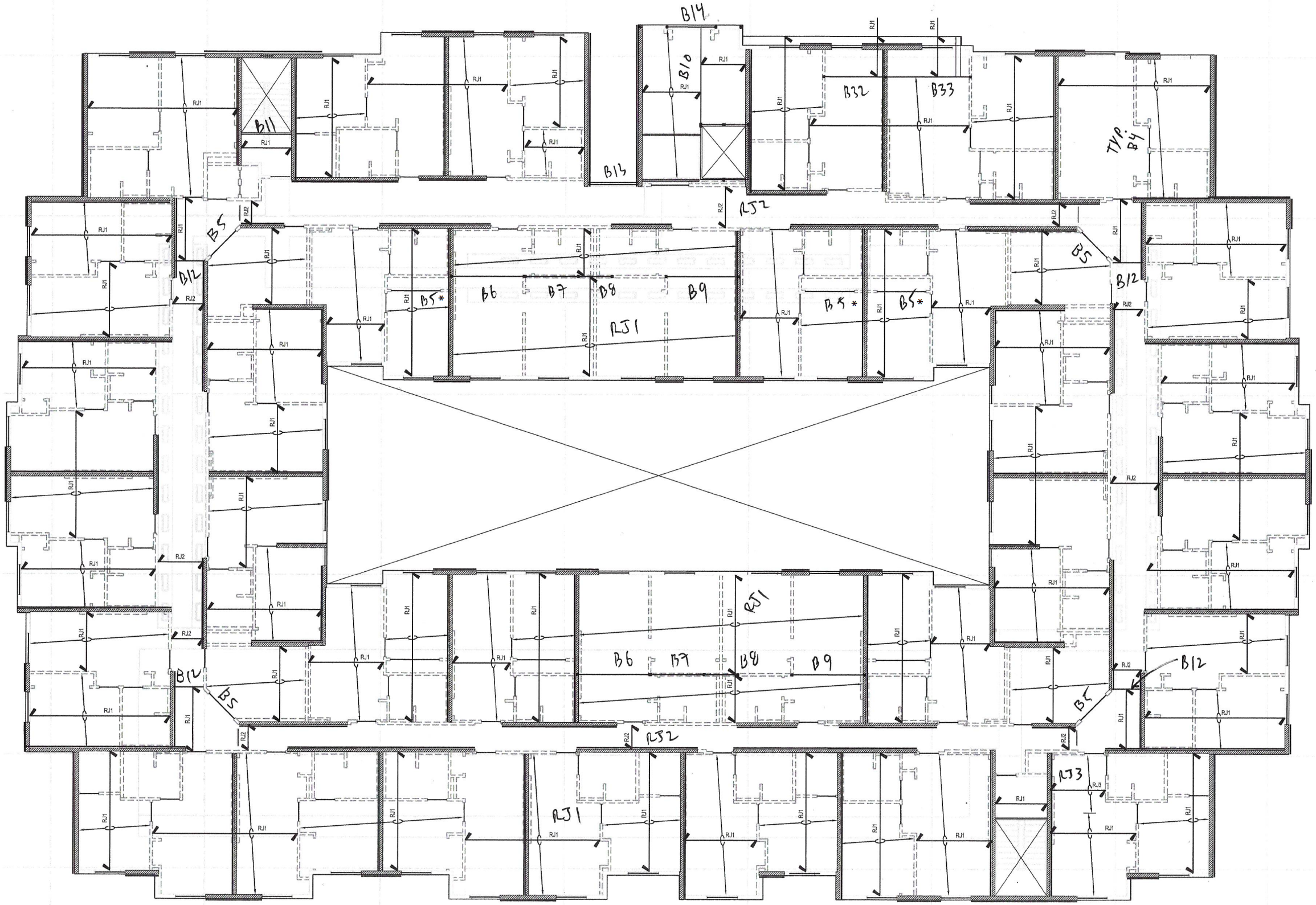

ROOF LEVEL FRAMING ID MAP

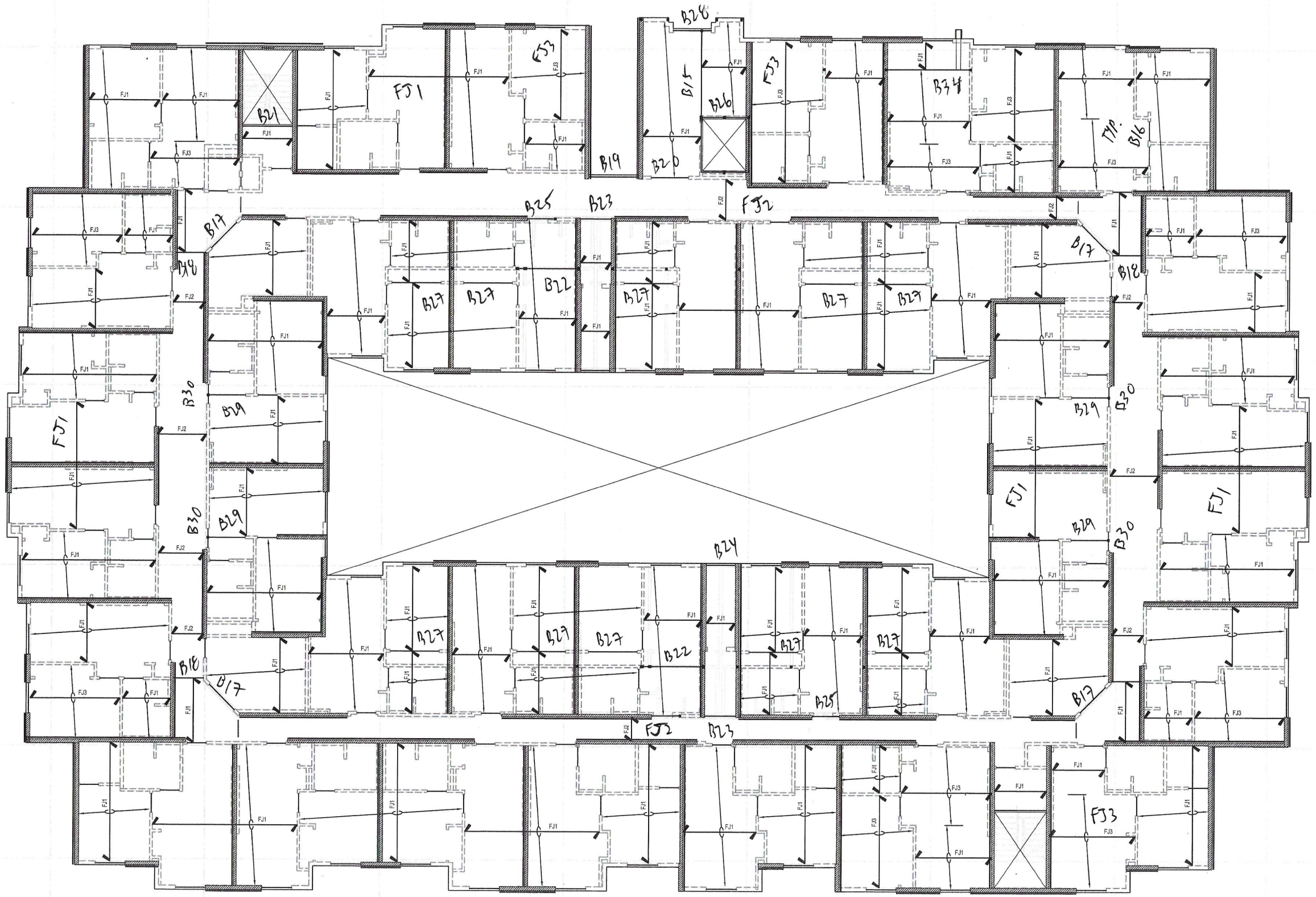

LEVEL THREE FRAMING ID MAP

THANG LE, S.E.
STRUCTURAL ENGINEER

3029 Eisenhower Ave., Arcadia, CA 91006

Phone: (626) 731-1539 Fax: (626) 447-3400

Project: ESSEX TOWER

SIMPLY SUPPORTED WOOD BEAM

BEAM DESIGNATION: WOOD JOIST - RJ1 LOAD DURATION FACTOR (Cd): 1

BEAM SPAN: 17 ft. REPETITIVE USE FACTOR (Cru): 1.15

LOADING:	1.33 ft	*	(	17	+	20	)			
	0 ft	*	(	0	+	0	)			
	0 ft	*	(	0	+	0	)			
				23	+	27	plf	=	49	plf

ALLOWABLE DEFLECTION: Total Load - TL: L / 240 Live Load - LL: L / 360

DESIGN: 1 2 x 10 DF#2 Fv = 95 psi.

Fb = 875 psi.

b = 1.5 " d = 9.25 " Cf = 1.200

E = 1,600 ksi.

End Reaction: R = 192 lbs + 226 lbs = 418 lbs

Shear: V = 380 lbs fv= 41 psi < 95 psi SHEAR OK

Flexure: M = 1,778 lb-f fb= 997 psi < 1,208 psi FLEXURE OK

Deflection: Total Load Deflection = 0.58 in = L / 349 TL DEFL OK

Live Load Deflection = 0.32 in = L / 646 LL DEFL OK

BEAM DESIGNATION: WOOD JOIST - RJ2 LOAD DURATION FACTOR (Cd): 1

BEAM SPAN: 11 ft. REPETITIVE USE FACTOR (Cru): 1.15

LOADING:	1.33 ft	*	(	17	+	20	)			
	0 ft	*	(	0	+	0	)			
	0 ft	*	(	0	+	0	)			
				23	+	27	plf	=	49	plf

ALLOWABLE DEFLECTION: Total Load - TL: L / 240 Live Load - LL: L / 360

DESIGN: 1 2 x 6 DF#2 Fv = 95 psi.

Fb = 875 psi.

b = 1.5 " d = 5.5 " Cf = 1.400

E = 1,600 ksi.

End Reaction: R = 124 lbs + 146 lbs = 271 lbs.

Shear: V = 248 lbs fv= 45 psi < 95 psi SHEAR OK

Flexure: M = 744 lb-f fb= 1,181 psi < 1,409 psi FLEXURE OK

Deflection: Total Load Deflection = 0.49 in = L / 271 TL DEFL OK

Live Load Deflection = 0.26 in = L / 501 LL DEFL OK

SHEET NO: _____

THANG LE, S.E.
STRUCTURAL ENGINEER

3029 Eisenhower Ave., Arcadia, CA 91006

Phone: (626) 731-1539 Fax: (626) 447-3400

PROJECT NO: _____

Project: Essex Tower

SIMPLY SUPPORTED WOOD BEAM

BEAM DESIGNATION: WOOD JOIST - RJ3 LOAD DURATION FACTOR (Cd): 1

BEAM SPAN: 15.5 ft. REPETITIVE USE FACTOR (Cru): 1

LOADING:	1.33	ft	*	(	20	+	20	)		
	1.33	ft	*	(	55	+	0	)		
	0	ft	*	(	0	+	0	)		
					100	+	27	plf	=	126 plf

ALLOWABLE DEFLECTION: Total Load - TL: L / 240 Live Load - LL: L / 360

DESIGN: 1 1.75 x 9.25 LVL

Fv = 165 psi.
Fb = 2,600 psi.
Cv = 1.000
E = 2,000 ksi.

b = 1.75 " d = 9.25 "

End Reaction: R = 773 lbs + 206 lbs = 979 lbs

Shear: V = 882 lbs fv= 82 psi < 165 psi SHEAR OK

Flexure: M = 3,794 lb-f fb= 1,825 psi < 2,600 psi FLEXURE OK

Deflection: Total Load Deflection = 0.71 in = L / 262 TL DEFL OK

Live Load Deflection = 0.15 in = L / 1243 LL DEFL OK

SHEET NO: _____

THANG LE, S.E.
STRUCTURAL ENGINEER

3029 Eisenhower Ave., Arcadia, CA 91006

Phone: (626) 731-1539 Fax: (626) 447-3400

PROJECT NO: _____

Project: Essex Tower

SIMPLY SUPPORTED WOOD BEAM

BEAM DESIGNATION: WOOD JOIST - FJ1 LOAD DURATION FACTOR (Cd): 1

BEAM SPAN: 13.5 ft. REPETITIVE USE FACTOR (Cru): 1.15

LOADING:	1.33 ft	*	(	29	+	40	)			
	0 ft	*	(	0	+	0	)			
	0 ft	*	(	0	+	0	)			
				39	+	53	plf	=	92	plf

ALLOWABLE DEFLECTION: Total Load - TL: L / 240 Live Load - LL: L / 360

DESIGN: 1 2 x 10 DF#2 Fv = 95 psi.

Fb = 900 psi.

b = 1.5 " d = 9.25 " Cf = 1.200

E = 1,600 ksi.

End Reaction: R = 260 lbs + 359 lbs = 619 lbs

Shear: V = 549 lbs fv= 59 psi < 95 psi SHEAR OK

Flexure: M = 2,091 lb-f fb= 1,173 psi < 1,242 psi FLEXURE OK

Deflection: Total Load Deflection = 0.43 in = L / 374 TL DEFL OK

Live Load Deflection = 0.25 in = L / 645 LL DEFL OK

BEAM DESIGNATION: WOOD JOIST - FJ2 LOAD DURATION FACTOR (Cd): 1

BEAM SPAN: 9 ft. REPETITIVE USE FACTOR (Cru): 1.15

LOADING:	1.33 ft	*	(	29	+	40	)			
	0 ft	*	(	0	+	0	)			
	0 ft	*	(	0	+	0	)			
				39	+	53	plf	=	92	plf

ALLOWABLE DEFLECTION: Total Load - TL: L / 240 Live Load - LL: L / 360

DESIGN: 1 2 x 6 DF#1 Fv = 95 psi.

Fb = 1,000 psi.

b = 1.5 " d = 5.5 " Cf = 1.400

E = 1,700 ksi.

End Reaction: R = 174 lbs + 239 lbs = 413 lbs.

Shear: V = 371 lbs fv= 67 psi < 95 psi SHEAR OK

Flexure: M = 929 lb-f fb= 1,474 psi < 1,610 psi FLEXURE OK

Deflection: Total Load Deflection = 0.38 in = L / 282 TL DEFL OK

Live Load Deflection = 0.22 in = L / 486 LL DEFL OK

THANG LE, S.E.
STRUCTURAL ENGINEER

3029 Eisenhower Ave., Arcadia, CA 91006

Phone: (626) 731-1539 Fax: (626) 447-3400

SHEET NO: B7

PROJECT NO:

Project: ESSEX TOWER

SIMPLY SUPPORTED WOOD BEAM

BEAM DESIGNATION: WOOD JOIST - FJ3 LOAD DURATION FACTOR (Cd): 1

BEAM SPAN: 14.5 ft. REPETITIVE USE FACTOR (Cru): 1.15

LOADING:	1.33	ft	*	(	29	+	40	)		
	0	ft	*	(	0	+	0	)		
	0	ft	*	(	0	+	0	)		
					39	+	53	plf	=	92 plf

ALLOWABLE DEFLECTION: Total Load - TL: L / 240 Live Load - LL: L / 360

DESIGN: 1 2 x 10 DF#1

Fv = 95 psi.
Fb = 1,000 psi.
Cf = 1.200
E = 1,700 ksi.

b = 1.5 " d = 9.25 "

End Reaction:	R =	280	lbs	+	386	lbs	=	665	lbs	
Shear:	V =	595	lbs	fv=	64	psi	<	95	psi	SHEAR OK
Flexure:	M =	2,412	lb-f	fb=	1,353	psi	<	1,380	psi	FLEXURE OK
Deflection:	Total Load Deflection =				0.54	in	= L /	321		TL DEFL OK
	Live Load Deflection =				0.31	in	= L /	553		LL DEFL OK

Gravity Beam Design

RAM SBeam v06.00.00
STEEL BEAM - B1

07/06/21 12:26:18

STEEL CODE: AISC 360-10 ASD

SPAN INFORMATION (ft): I-End (0.00,0.00) J-End (9.00,0.00)

Beam Size (User Selected) = W8X15 Fy = 50.0 ksi
Total Beam Length (ft) = 9.00
Mp (kip-ft) = 56.67
Top flange not braced by decking.

POINT LOADS (kips):

Dist (ft)	DL	LL	PartL	Flange Bracing Top	Flange Bracing Bottom
4.500	10.00	0.00	0.00	No	No

LINE LOADS (k/ft):

Load	Dist (ft)	DL	LL	PartL
1	0.000	0.015	0.000	0.000
	9.000	0.015	0.000	0.000

SHEAR: Max Va (DL+LL) = 5.07 kips Vn/1.50 = 39.74 kips

MOMENTS:

Span	Cond	LoadCombo	Ma kip-ft	@ ft	Lb ft	Cb	Ω	Mn / Ω kip-ft
Center	Max +	DL	22.7	4.5	9.0	1.31	1.67	29.77
Controlling		DL	22.7	4.5	9.0	1.31	1.67	29.77

REACTIONS (kips):

	Left	**Right**
DL reaction	5.07	5.07
Max +total reaction	5.07	5.07

DEFLECTIONS:

Dead load (in)	at	4.50 ft	=	-0.190	L/D	=	568
Live load (in)	at	4.50 ft	=	-0.000			
Net Total load (in)	at	4.50 ft	=	-0.190	L/D	=	568

THANG LE, S.E.
STRUCTURAL ENGINEER

3029 Eisenhower Ave., Arcadia, CA 91006

Phone: (626) 731-1539 Fax: (626) 447-3400

Project: ESSEX TOWER

SIMPLY SUPPORTED WOOD BEAM

BEAM DESIGNATION: WOOD BEAM - B2 LOAD DURATION FACTOR (Cd): 1

BEAM SPAN: 16 ft. REPETITIVE USE FACTOR (Cru): 1

LOADING:	8.5	ft	*	(	20	+	20	)		
	0	ft	*	(	0	+	0	)		
	0	ft	*	(	0	+	0	)		
					170	+	170	plf	=	340 plf

ALLOWABLE DEFLECTION: Total Load - TL: L / 240 Live Load - LL: L / 360

DESIGN: 1 7 x 9.25 PSL

Fv = 165 psi.
Fb = 2,600 psi.
Cv = 1.000
E = 2,000 ksi.

b = 7 " d = 9.25 "

End Reaction: R = 1,360 lbs + 1,360 lbs = 2,720 lbs

Shear: V = 2,458 lbs fv= 57 psi < 165 psi SHEAR OK

Flexure: M = 10,880 lb-f fb= 1,308 psi < 2,600 psi FLEXURE OK

Deflection: Total Load Deflection = 0.54 in = L / 354 TL DEFL OK

Live Load Deflection = 0.27 in = L / 707 LL DEFL OK

THANG LE, S.E.
STRUCTURAL ENGINEER

3029 Eisenhower Ave., Arcadia, CA 91006
Phone: (626) 731-1539 Fax: (626) 447-3400

SHEET NO: _____

PROJECT NO: _____

Project: **Essex Tower**

SIMPLY SUPPORTED WOOD BEAM

LOAD DURATION FACTOR (Cd): 1
BEAM DESIGNATION: **WOOD BEAM - B3** REPETITIVE USE FACTOR (Cru): 1
BEAM SPAN: 16.5 ft ALLOWABLE TOTAL LOAD DEFLECTION: L / 240
ALLOWABLE LIVE LOAD DEFLECTION: L / 360

				DL		LL					
w =	2	ft	* (	20	+	20	)	=	80	lbs/ft	
P1 =	2720	sf	* (	1	+	1	)	=	2720	lbs	at 10 ft
P2 =		sf	* (		+		)	=	0	lbs	at
P3 =		sf	* (		+		)	=	0	lbs	at
wa1 =		ft	* (		+		)	=	0	lbs/ft	at
wb1 =		ft	* (		+		)	=	0	lbs/ft	at
wa2 =		ft	* (		+		)	=	0	lbs/ft	at
wb2 =		ft	* (		+		)	=	0	lbs/ft	at

1 5.25 x 11.25 PSL

b = 5.25 in Fv = 165 psi E = 2000 psi
d = 11.25 in Cv = 1.000 Fb = 2600 psi

End Reactions:	R,L =	660	lbs	+	1,072	lbs	=	1,732	lbs		
	R,R =	660	lbs	+	1,648	lbs	=	2,308	lbs		
Shear:	V_{max} =	2,308	lbs				fv =	59	psi < 165 psi		**<< OK**
Flexure:	M =	13,438	lb-ft	at	10 ft		fb =	1,456	psi < 2,600 psi		**<< OK**
Deflection:	Total Load Deflection = 0.529 in						=	L / 375	TL DEFLECTION OK		
	Live Load Deflection = 0.264 in						=	L / 749	LL DEFLECTION OK		

THANG LE, S.E.
STRUCTURAL ENGINEER

3029 Eisenhower Ave., Arcadia, CA 91006

Phone: (626) 731-1539 Fax: (626) 447-3400

Project: ESSEX TOWER

SIMPLY SUPPORTED WOOD BEAM

BEAM DESIGNATION: WOOD BEAM - B4 — LOAD DURATION FACTOR (Cd): 1

BEAM SPAN: 3.25 ft. — REPETITIVE USE FACTOR (Cru): 1

LOADING:	12.5 ft	*	(	20	+	20	)			
	0 ft	*	(	0	+	0	)			
	0 ft	*	(	0	+	0	)			
				250	+	250	plf	=	500	plf

ALLOWABLE DEFLECTION: Total Load - TL: L / 240 Live Load - LL: L / 360

DESIGN: 1 4 x 6 DF#2

Fv = 95 psi.
Fb = 875 psi.
Cf = 1.400
E = 1,600 ksi.

b = 3.5 " d = 5.5 "

End Reaction: R = 406 lbs + 406 lbs = 813 lbs

Shear: V = 583 lbs fv= 45 psi < 95 psi SHEAR OK

Flexure: M = 660 lb-f fb= 449 psi < 1,225 psi FLEXURE OK

Deflection: Total Load Deflection = 0.02 in = L / 2413 TL DEFL OK

Live Load Deflection = 0.01 in = L / 4825 LL DEFL OK

BEAM DESIGNATION: WOOD BEAM - B5 — LOAD DURATION FACTOR (Cd): 1

BEAM SPAN: 6 ft. — REPETITIVE USE FACTOR (Cru): 1

LOADING:	11 ft	*	(	20	+	20	)			
	0 ft	*	(	0	+	0	)			
	0 ft	*	(	0	+	0	)			
				220	+	220	plf	=	440	plf

ALLOWABLE DEFLECTION: Total Load - TL: L / 240 Live Load - LL: L / 360

DESIGN: 1 4 x 10 DF#2

Fv = 95 psi.
Fb = 875 psi.
Cf = 1.200
E = 1,600 ksi.

b = 3.5 " d = 9.25 "

End Reaction: R = 660 lbs + 660 lbs = 1,320 lbs.

Shear: V = 981 lbs fv= 45 psi < 95 psi SHEAR OK

Flexure: M = 1,980 lb-f fb= 476 psi < 1,050 psi FLEXURE OK

Deflection: Total Load Deflection = 0.03 in = L / 2073 TL DEFL OK

Live Load Deflection = 0.02 in = L / 4145 LL DEFL OK

THANG LE, S.E.
STRUCTURAL ENGINEER

3029 Eisenhower Ave., Arcadia, CA 91006

Phone: (626) 731-1539 Fax: (626) 447-3400

SHEET NO: B12

PROJECT NO:

Project: ESSEX TOWER

SIMPLY SUPPORTED WOOD BEAM

BEAM DESIGNATION: WOOD BEAM - B5* LOAD DURATION FACTOR (Cd): 1

BEAM SPAN: 8.25 ft. REPETITIVE USE FACTOR (Cru): 1

LOADING:	12.5	ft	*	(	20	+	20	)		
	0	ft	*	(	0	+	0	)		
	0	ft	*	(	0	+	0	)		
					250	+	250	plf	=	500 plf

ALLOWABLE DEFLECTION: Total Load - TL: L / 240 Live Load - LL: L / 360

DESIGN: 1 4 x 10 DF#2

Fv = 95 psi.
Fb = 875 psi.
Cf = 1.200
E = 1,600 ksi.

b = 3.5 " d = 9.25 "

End Reaction: R = 1,031 lbs + 1,031 lbs = 2,063 lbs

Shear: V = 1,677 lbs fv= 78 psi < 95 psi SHEAR OK

Flexure: M = 4,254 lb-f fb= 1,023 psi < 1,050 psi FLEXURE OK

Deflection: Total Load Deflection = 0.14 in = L / 702 TL DEFL OK
Live Load Deflection = 0.07 in = L / 1403 LL DEFL OK

THANG LE, S.E.
STRUCTURAL ENGINEER

3029 Eisenhower Ave., Arcadia, CA 91006

Phone: (626) 731-1539 Fax: (626) 447-3400

Project: ESSEX TOWER

SIMPLY SUPPORTED WOOD BEAM

BEAM DESIGNATION: WOOD BEAM - B6 LOAD DURATION FACTOR (Cd): 1

BEAM SPAN: 12 ft. REPETITIVE USE FACTOR (Cru): 1

LOADING:	12.5 ft	*	(	20	+	20	)			
	0 ft	*	(	0	+	0	)			
	0 ft	*	(	0	+	0	)			
				250	+	250	plf	=	500	plf

ALLOWABLE DEFLECTION: Total Load - TL: L / 240 Live Load - LL: L / 360

DESIGN: 1 5.25 x 9.25 PSL

Fv = 165 psi.
Fb = 2,600 psi.
Cv = 1.000
E = 2,000 ksi.

b = 5.25 " d = 9.25 "

End Reaction: R = 1,500 lbs + 1,500 lbs = 3,000 lbs

Shear: V = 2,615 lbs fv= 81 psi < 165 psi SHEAR OK

Flexure: M = 9,000 lb-f fb= 1,443 psi < 2,600 psi FLEXURE OK

Deflection: Total Load Deflection = 0.34 in = L / 427 TL DEFL OK
Live Load Deflection = 0.17 in = L / 855 LL DEFL OK

BEAM DESIGNATION: WOOD BEAM - B7 LOAD DURATION FACTOR (Cd): 1

BEAM SPAN: 8.5 ft. REPETITIVE USE FACTOR (Cru): 1

LOADING:	12.5 ft	*	(	20	+	20	)			
	0 ft	*	(	0	+	0	)			
	0 ft	*	(	0	+	0	)			
				250	+	250	plf	=	500	plf

ALLOWABLE DEFLECTION: Total Load - TL: L / 240 Live Load - LL: L / 360

DESIGN: 1 6 x 10 DF#2

Fv = 85 psi.
Fb = 875 psi.
Cf = 1.026
E = 1,300 ksi.

b = 5.5 " d = 9.5 "

End Reaction: R = 1,063 lbs + 1,063 lbs = 2,125 lbs.

Shear: V = 1,729 lbs fv= 50 psi < 85 psi SHEAR OK

Flexure: M = 4,516 lb-f fb= 655 psi < 898 psi FLEXURE OK

Deflection: Total Load Deflection = 0.11 in = L / 887 TL DEFL OK
Live Load Deflection = 0.06 in = L / 1775 LL DEFL OK

THANG LE, S.E.
STRUCTURAL ENGINEER

3029 Eisenhower Ave., Arcadia, CA 91006

Phone: (626) 731-1539 Fax: (626) 447-3400

Project: ESSEX TOWER

SIMPLY SUPPORTED WOOD BEAM

BEAM DESIGNATION: WOOD BEAM - B8 LOAD DURATION FACTOR (Cd): 1

BEAM SPAN: 5.5 ft. REPETITIVE USE FACTOR (Cru): 1

LOADING:	12.5 ft	*	(	20	+	20	)			
	0 ft	*	(	0	+	0	)			
	0 ft	*	(	0	+	0	)			
				250	+	250	plf	=	500	plf

ALLOWABLE DEFLECTION: Total Load - TL: L / 240 Live Load - LL: L / 360

DESIGN: 1 6 x 10 DF#2 Fv = 85 psi.

Fb = 875 psi.

b = 5.5 " d = 9.5 " Cf = 1.026

E = 1,300 ksi.

End Reaction: R = 688 lbs + 688 lbs = 1,375 lbs

Shear: V = 979 lbs fv= 28 psi < 85 psi SHEAR OK

Flexure: M = 1,891 lb-f fb= 274 psi < 898 psi FLEXURE OK

Deflection: Total Load Deflection = 0.02 in = L / 3275 TL DEFL OK

Live Load Deflection = 0.01 in = L / 6550 LL DEFL OK

BEAM DESIGNATION: WOOD BEAM - B9 LOAD DURATION FACTOR (Cd): 1

BEAM SPAN: 12 ft. REPETITIVE USE FACTOR (Cru): 1

LOADING:	12.5 ft	*	(	20	+	20	)			
	0 ft	*	(	0	+	0	)			
	0 ft	*	(	0	+	0	)			
				250	+	250	plf	=	500	plf

ALLOWABLE DEFLECTION: Total Load - TL: L / 240 Live Load - LL: L / 360

DESIGN: 1 5.25 x 9.25 PSL Fv = 290 psi.

Fb = 2,600 psi.

b = 5.25 " d = 9.25 " Cv = 1.000

E = 2,000 ksi.

End Reaction: R = 1,500 lbs + 1,500 lbs = 3,000 lbs.

Shear: V = 2,615 lbs fv= 81 psi < 290 psi SHEAR OK

Flexure: M = 9,000 lb-f fb= 1,443 psi < 2,600 psi FLEXURE OK

Deflection: Total Load Deflection = 0.34 in = L / 427 TL DEFL OK

Live Load Deflection = 0.17 in = L / 855 LL DEFL OK

THANG LE, S.E.
STRUCTURAL ENGINEER

3029 Eisenhower Ave., Arcadia, CA 91006

Phone: (626) 731-1539 Fax: (626) 447-3400

Project: ESSEX TOWER

SIMPLY SUPPORTED WOOD BEAM

BEAM DESIGNATION: WOOD BEAM - B10 LOAD DURATION FACTOR (Cd): 1

BEAM SPAN: 16 ft. REPETITIVE USE FACTOR (Cru): 1

LOADING:	8.5 ft	*	(	20	+	20	)			
	0 ft	*	(	0	+	20	)			
	0 ft	*	(	0	+	0	)			
				170	+	170	plf	=	340	plf

ALLOWABLE DEFLECTION: Total Load - TL: L / 240 Live Load - LL: L / 360

DESIGN: 1 7 x 9.25 PSL

b = 7 " d = 9.25 "

Fv = 165 psi.
Fb = 2,600 psi.
Cv = 1.000
E = 2,000 ksi.

End Reaction: R = 1,360 lbs + 1,360 lbs = 2,720 lbs

Shear: V = 2,458 lbs fv= 57 psi < 165 psi SHEAR OK

Flexure: M = 10,880 lb-f fb= 1,308 psi < 2,600 psi FLEXURE OK

Deflection: Total Load Deflection = 0.54 in = L / 354 TL DEFL OK
Live Load Deflection = 0.27 in = L / 707 LL DEFL OK

BEAM DESIGNATION: WOOD BEAM - B11 LOAD DURATION FACTOR (Cd): 1

BEAM SPAN: 9 ft. REPETITIVE USE FACTOR (Cru): 1

LOADING:	4.5 ft	*	(	20	+	100	)			
	0 ft	*	(	0	+	0	)			
	0 ft	*	(	0	+	0	)			
				90	+	450	plf	=	540	plf

ALLOWABLE DEFLECTION: Total Load - TL: L / 240 Live Load - LL: L / 360

DESIGN: 1 6 x 10 DF#2

b = 5.5 " d = 9.5 "

Fv = 85 psi.
Fb = 875 psi.
Cf = 1.026
E = 1,300 ksi.

End Reaction: R = 405 lbs + 2,025 lbs = 2,430 lbs.

Shear: V = 2,003 lbs fv= 57 psi < 85 psi SHEAR OK

Flexure: M = 5,468 lb-f fb= 793 psi < 898 psi FLEXURE OK

Deflection: Total Load Deflection = 0.16 in = L / 692 TL DEFL OK
Live Load Deflection = 0.13 in = L / 831 LL DEFL OK

THANG LE, S.E.
STRUCTURAL ENGINEER

3029 Eisenhower Ave., Arcadia, CA 91006

Phone: (626) 731-1539 Fax: (626) 447-3400

Project: ESSEX TOWER

SIMPLY SUPPORTED WOOD BEAM

BEAM DESIGNATION: WOOD BEAM - B12 LOAD DURATION FACTOR (Cd): 1

BEAM SPAN: 5 ft. REPETITIVE USE FACTOR (Cru): 1

LOADING:	5.5 ft	*	(	20	+	20	)			
	0 ft	*	(	0	+	0	)			
	0 ft	*	(	0	+	0	)			
				110	+	110	plf	=	220	plf

ALLOWABLE DEFLECTION: Total Load - TL: L / 240 Live Load - LL: L / 360

DESIGN: 1 4 x 10 DF#2 Fv = 95 psi.

Fb = 875 psi.

b = 3.5 " d = 9.25 " Cf = 1.200

E = 1,600 ksi.

End Reaction: R = 275 lbs + 275 lbs = 550 lbs

Shear: V = 380 lbs fv= 18 psi < 95 psi SHEAR OK

Flexure: M = 688 lb-f fb= 165 psi < 1,050 psi FLEXURE OK

Deflection: Total Load Deflection = 0.01 in = L / 7163 TL DEFL OK

Live Load Deflection = 0.00 in = L / 14326 LL DEFL OK

BEAM DESIGNATION: WOOD BEAM - B13 LOAD DURATION FACTOR (Cd): 1

BEAM SPAN: 8.5 ft. REPETITIVE USE FACTOR (Cru): 1

LOADING:	3.5 ft	*	(	20	+	20	)			
	0 ft	*	(	0	+	0	)			
	0 ft	*	(	0	+	0	)			
				70	+	70	plf	=	140	plf

ALLOWABLE DEFLECTION: Total Load - TL: L / 240 Live Load - LL: L / 360

DESIGN: 1 4 x 10 DF#2 Fv = 95 psi.

Fb = 875 psi.

b = 3.5 " d = 9.25 " Cf = 1.200

E = 1,600 ksi.

End Reaction: R = 298 lbs + 298 lbs = 595 lbs.

Shear: V = 487 lbs fv= 23 psi < 95 psi SHEAR OK

Flexure: M = 1,264 lb-f fb= 304 psi < 1,050 psi FLEXURE OK

Deflection: Total Load Deflection = 0.04 in = L / 2291 TL DEFL OK

Live Load Deflection = 0.02 in = L / 4582 LL DEFL OK

THANG LE, S.E.
STRUCTURAL ENGINEER

3029 Eisenhower Ave., Arcadia, CA 91006
Phone: (626) 731-1539 Fax: (626) 447-3400

SHEET NO: _____

PROJECT NO: _____

Project: **Essex Tower**

SIMPLY SUPPORTED WOOD BEAM

LOAD DURATION FACTOR (Cd): 1
BEAM DESIGNATION: **WOOD BEAM - B14** REPETITIVE USE FACTOR (Cru): 1
BEAM SPAN: 8 ft ALLOWABLE TOTAL LOAD DEFLECTION: L / 240
ALLOWABLE LIVE LOAD DEFLECTION: L / 360

				DL		LL					
w =	10	ft	* (	29	+	8	)	=	370	lbs/ft	
P1 =	2720	sf	* (	1	+	1	)	=	2720	lbs	at 5.5 ft
P2 =		sf	* (		+		)	=	0	lbs	at
P3 =		sf	* (		+		)	=	0	lbs	at
wa1 =		ft	* (		+		)	=	0	lbs/ft	at
wb1 =		ft	* (		+		)	=	0	lbs/ft	at
wa2 =		ft	* (		+		)	=	0	lbs/ft	at
wb2 =		ft	* (		+		)	=	0	lbs/ft	at

1 5.25 x 9.25 PSL

b = 5.25 in Fv = 165 psi E = 2000 psi
d = 9.25 in Cv = 1.000 Fb = 2600 psi

End Reactions:	R,L =	1,480	lbs	+	850	lbs	=	2,330	lbs		
	R,R =	1,480	lbs	+	1,870	lbs	=	3,350	lbs		
Shear:	V_{max} =	3,350	lbs				fv =	103	psi < 165 psi		**<< OK**
Flexure:	M =	7,635	lb-ft	at	5.5 ft		fb =	1,224	psi < 2,600 psi		**<< OK**
Deflection:	Total Load Deflection = 0.127 in						=	L / 756	TL DEFLECTION OK		
	Live Load Deflection = 0.064 in						=	L / 1512	LL DEFLECTION OK		

THANG LE, S.E.
STRUCTURAL ENGINEER

3029 Eisenhower Ave., Arcadia, CA 91006

Phone: (626) 731-1539 Fax: (626) 447-3400

Project: ESSEX TOWER

SIMPLY SUPPORTED WOOD BEAM

BEAM DESIGNATION: WOOD BEAM - B15 LOAD DURATION FACTOR (Cd): 1

BEAM SPAN: 14 ft. REPETITIVE USE FACTOR (Cru): 1

LOADING:	8.5 ft	*	(	32.5	+	40	)			
	0 ft	*	(	0	+	0	)			
	0 ft	*	(	0	+	0	)			
				276	+	340	plf	=	616	plf

ALLOWABLE DEFLECTION: Total Load - TL: L / 240 Live Load - LL: L / 360

DESIGN:	1	7	x	11.25	PSL	Fv =	165	psi.
						Fb =	2,600	psi.
	b =	7 "	d =	11.25 "		Cv =	1.000	
						E =	2,000	ksi.

End Reaction:	R =	1,934	lbs	+	2,380	lbs	=	4,314	lbs		
Shear:	V =	3,736	lbs	fv=	71	psi	<	165	psi	SHEAR OK	
Flexure:	M =	15,098	lb-f	fb=	1,227	psi	<	2,600	psi	FLEXURE OK	
Deflection:	Total Load Deflection =				0.32	in	= L /	524		TL DEFL OK	
	Live Load Deflection =				0.18	in	= L /	950		LL DEFL OK	

BEAM DESIGNATION: WOOD BEAM - B16 LOAD DURATION FACTOR (Cd): 1

BEAM SPAN: 3.25 ft. REPETITIVE USE FACTOR (Cru): 1

LOADING:	12.5 ft	*	(	32.5	+	40	)		
	0 ft	*	(	0	+	0	)		
	0 ft	*	(	0	+	0	)		
				406	+	500	plf	=	906 plf

ALLOWABLE DEFLECTION: Total Load - TL: L / 240 Live Load - LL: L / 360

DESIGN:	1	4	x	6	DF#2	Fv =	95	psi.
						Fb =	875	psi.
	b =	3.5 "	d =	5.5 "		Cf =	1.091	
						E =	1,600	ksi.

End Reaction:	R =	660	lbs	+	813	lbs	=	1,473	lbs.		
Shear:	V =	1,057	lbs	fv=	82	psi	<	95	psi	SHEAR OK	
Flexure:	M =	1,197	lb-f	fb=	814	psi	<	954	psi	FLEXURE OK	
Deflection:	Total Load Deflection =				0.03	in	= L /	1331		TL DEFL OK	
	Live Load Deflection =				0.02	in	= L /	2413		LL DEFL OK	

THANG LE, S.E.
STRUCTURAL ENGINEER

3029 Eisenhower Ave., Arcadia, CA 91006

Phone: (626) 731-1539 Fax: (626) 447-3400

SHEET NO: B18*

PROJECT NO:

Project: ESSEX TOWER

SIMPLY SUPPORTED WOOD BEAM

BEAM DESIGNATION: WOOD BEAM - B15 LOAD DURATION FACTOR (Cd): 1

BEAM SPAN: 14 ft. REPETITIVE USE FACTOR (Cru): 1

LOADING:	8.5	ft	*	(	32.5	+	40	)		
	0	ft	*	(	0	+	0	)		
	0	ft	*	(	0	+	0	)		
					276	+	340	plf	=	616 plf

ALLOWABLE DEFLECTION: Total Load - TL: L / 240 Live Load - LL: L / 360

DESIGN: 2 5.25 x 9.25 PSL

Fv = 165 psi.
Fb = 2,600 psi.
Cv = 0.995
E = 2,000 ksi.

b = 10.5 " d = 9.25 "

End Reaction: R = 1,934 lbs + 2,380 lbs = 4,314 lbs

Shear: V = 3,839 lbs fv= 59 psi < 165 psi SHEAR OK

Flexure: M = 15,098 lb-f fb= 1,210 psi < 2,587 psi FLEXURE OK

Deflection: Total Load Deflection = 0.38 in = L / 437 TL DEFL OK

Live Load Deflection = 0.21 in = L / 792 LL DEFL OK

THANG LE, S.E.
STRUCTURAL ENGINEER

3029 Eisenhower Ave., Arcadia, CA 91006

Phone: (626) 731-1539 Fax: (626) 447-3400

Project: ESSEX TOWER

SIMPLY SUPPORTED WOOD BEAM

BEAM DESIGNATION: WOOD BEAM - B17 LOAD DURATION FACTOR (Cd): 1

BEAM SPAN: 6 ft. REPETITIVE USE FACTOR (Cru): 1

LOADING:	9 ft	*	(	32.5	+	40	)			
	0 ft	*	(	0	+	0	)			
	0 ft	*	(	0	+	0	)			
				293	+	360	plf	=	653	plf

ALLOWABLE DEFLECTION: Total Load - TL: L / 240 Live Load - LL: L / 360

DESIGN: 1 4 x 10 DF#2 Fv = 180 psi.

Fb = 900 psi.

b = 3.5 " d = 9.25 " Cf = 1.200

E = 1,600 ksi.

End Reaction: R = 878 lbs + 1,080 lbs = 1,958 lbs

Shear: V = 1,455 lbs fv= 67 psi < 180 psi SHEAR OK

Flexure: M = 2,936 lb-f fb= 706 psi < 1,080 psi FLEXURE OK

Deflection: Total Load Deflection = 0.05 in = L / 1398 TL DEFL OK

Live Load Deflection = 0.03 in = L / 2533 LL DEFL OK

BEAM DESIGNATION: WOOD BEAM - B18 LOAD DURATION FACTOR (Cd): 1

BEAM SPAN: 5 ft. REPETITIVE USE FACTOR (Cru): 1.15

LOADING:	5.5 ft	*	(	32.5	+	40	)			
	0 ft	*	(	0	+	0	)			
	0 ft	*	(	0	+	0	)			
				179	+	220	plf	=	399	plf

ALLOWABLE DEFLECTION: Total Load - TL: L / 240 Live Load - LL: L / 360

DESIGN: 1 4 x 10 DF#2 Fv = 180 psi.

Fb = 900 psi.

b = 3.5 " d = 9.25 " Cf = 1.200

E = 1,600 ksi.

End Reaction: R = 447 lbs + 550 lbs = 997 lbs.

Shear: V = 690 lbs fv= 32 psi < 180 psi SHEAR OK

Flexure: M = 1,246 lb-f fb= 300 psi < 1,242 psi FLEXURE OK

Deflection: Total Load Deflection = 0.02 in = L / 3952 TL DEFL OK

Live Load Deflection = 0.01 in = L / 7163 LL DEFL OK

THANG LE, S.E.
STRUCTURAL ENGINEER

3029 Eisenhower Ave., Arcadia, CA 91006

Phone: (626) 731-1539 Fax: (626) 447-3400

SHEET NO: B20

PROJECT NO:

Project: ESSEX TOWER

SIMPLY SUPPORTED WOOD BEAM

BEAM DESIGNATION: WOOD BEAM - B19 LOAD DURATION FACTOR (Cd): 1

BEAM SPAN: 8.5 ft. REPETITIVE USE FACTOR (Cru): 1

LOADING:	3.5 ft	*	(	39	+	40	)			
	10 ft	*	(	12	+	0	)			
	0 ft	*	(	0	+	0	)			
				257	+	140	plf	=	397	plf

ALLOWABLE DEFLECTION: Total Load - TL: L / 240 Live Load - LL: L / 360

DESIGN: 1 6 x 10 DF#2 Fv = 85 psi.

Fb = 900 psi.

b = 5.5 " d = 9.5 " Cf = 1.026

E = 1,300 ksi.

End Reaction: R = 1,090 lbs + 595 lbs = 1,685 lbs

Shear: V = 1,371 lbs fv= 39 psi < 85 psi SHEAR OK

Flexure: M = 3,581 lb-f fb= 519 psi < 924 psi FLEXURE OK

Deflection: Total Load Deflection = 0.09 in = L / 1119 TL DEFL OK

Live Load Deflection = 0.03 in = L / 3169 LL DEFL OK

BEAM DESIGNATION: WOOD BEAM - B20 LOAD DURATION FACTOR (Cd): 1

BEAM SPAN: 6 ft. REPETITIVE USE FACTOR (Cru): 1

LOADING:	3.5 ft	*	(	39	+	40	)			
	10 ft	*	(	12	+	0	)			
	0 ft	*	(	0	+	0	)			
				257	+	140	plf	=	397	plf

ALLOWABLE DEFLECTION: Total Load - TL: L / 240 Live Load - LL: L / 360

DESIGN: 1 4 x 10 DF#2 Fv = 180 psi.

Fb = 900 psi.

b = 3.5 " d = 9.25 " Cf = 1.029

E = 1,600 ksi.

End Reaction: R = 770 lbs + 420 lbs = 1,190 lbs.

Shear: V = 884 lbs fv= 41 psi < 180 psi SHEAR OK

Flexure: M = 1,784 lb-f fb= 429 psi < 926 psi FLEXURE OK

Deflection: Total Load Deflection = 0.03 in = L / 2300 TL DEFL OK

Live Load Deflection = 0.01 in = L / 6514 LL DEFL OK

THANG LE, S.E.
STRUCTURAL ENGINEER

3029 Eisenhower Ave., Arcadia, CA 91006

Phone: (626) 731-1539 Fax: (626) 447-3400

SHEET NO: B21

PROJECT NO:

Project: ESSEX TOWER

SIMPLY SUPPORTED WOOD BEAM

BEAM DESIGNATION: WOOD BEAM - B21 LOAD DURATION FACTOR (Cd): 1

BEAM SPAN: 8.5 ft. REPETITIVE USE FACTOR (Cru): 1

LOADING:	4.5	ft	*	(	32.5	+	100	)		
	0	ft	*	(	0	+	0	)		
	0	ft	*	(	0	+	0	)		
					146	+	450	plf	=	596 plf

ALLOWABLE DEFLECTION: Total Load - TL: L / 240 Live Load - LL: L / 360

DESIGN: 1 6 x 10 DF#2

Fv = 85 psi.
Fb = 900 psi.
Cf = 1.026
E = 1,300 ksi.

b = 5.5 " d = 9.5 "

End Reaction: R = 622 lbs + 1,913 lbs = 2,534 lbs

Shear: V = 2,062 lbs fv= 59 psi < 85 psi SHEAR OK

Flexure: M = 5,385 lb-f fb= 781 psi < 924 psi FLEXURE OK

Deflection: Total Load Deflection = 0.14 in = L / 744 TL DEFL OK

Live Load Deflection = 0.10 in = L / 986 LL DEFL OK

THANG LE, S.E.
STRUCTURAL ENGINEER

3029 Eisenhower Ave., Arcadia, CA 91006
Phone: (626) 731-1539 Fax: (626) 447-3400

SHEET NO: _____

PROJECT NO: _____

Project: **ESSEX TOWER**

SIMPLY SUPPORTED WOOD BEAM

LOAD DURATION FACTOR (Cd): 1
BEAM DESIGNATION: **WOOD BEAM - B22** REPETITIVE USE FACTOR (Cru): 1
BEAM SPAN: 10 ft ALLOWABLE TOTAL LOAD DEFLECTION: L / 240
ALLOWABLE LIVE LOAD DEFLECTION: L / 360

				DL		LL					
w =	10	ft	* (	31.5	+	8	)	=	395	lbs/ft	
P1 =	5125	sf	* (	1	+	1	)	=	5125	lbs	at 1 ft
P2 =		sf	* (		+		)	=	0	lbs	at
P3 =		sf	* (		+		)	=	0	lbs	at
wa1 =		ft	* (		+		)	=	0	lbs/ft	at
wb1 =		ft	* (		+		)	=	0	lbs/ft	at
wa2 =		ft	* (		+		)	=	0	lbs/ft	at
wb2 =		ft	* (		+		)	=	0	lbs/ft	at

1 5.25 x 9.25 PSL

b = 5.25 in Fv = 290 psi E = 2000 psi
d = 9.25 in Cv = 1.000 Fb = 2600 psi

End Reactions:	R,L =	1,975	lbs	+	4,613	lbs	=	6,588	lbs		
	R,R =	1,975	lbs	+	513	lbs	=	2,488	lbs		
Shear:	V_{max} =	6,588	lbs				fv =	203	psi < 290 psi		**<< OK**
Flexure:	M =	9,550	lb-ft	at	5 ft		fb =	1,531	psi < 2,600 psi		**<< OK**
Deflection:	Total Load Deflection = 0.248 in						=	L / 483	TL DEFLECTION OK		
	Live Load Deflection = 0.124 in						=	L / 967	LL DEFLECTION OK		

THANG LE, S.E.
STRUCTURAL ENGINEER

3029 Eisenhower Ave., Arcadia, CA 91006

Phone: (626) 731-1539 Fax: (626) 447-3400

SHEET NO: B23

PROJECT NO:

Project: ESSEX TOWER

SIMPLY SUPPORTED WOOD BEAM

BEAM DESIGNATION: WOOD BEAM - B23 LOAD DURATION FACTOR (Cd): 1

BEAM SPAN: 5.5 ft. REPETITIVE USE FACTOR (Cru): 1

LOADING:	7 ft	*	(	20	+	20	)			
	3.5 ft	*	(	32.5	+	40	)			
	10 ft	*	(	12	+	0	)			
				374	+	280	plf	=	654	plf

ALLOWABLE DEFLECTION: Total Load - TL: L / 240 Live Load - LL: L / 360

DESIGN: 1 6 x 10 DF#2 Fv = 85 psi.

Fb = 900 psi.

b = 5.5 " d = 9.5 " Cf = 1.026

E = 1,300 ksi.

End Reaction: R = 1,028 lbs + 770 lbs = 1,798 lbs

Shear: V = 1,280 lbs fv= 37 psi < 85 psi SHEAR OK

Flexure: M = 2,472 lb-f fb= 359 psi < 924 psi FLEXURE OK

Deflection: Total Load Deflection = 0.03 in = L / 2505 TL DEFL OK

Live Load Deflection = 0.01 in = L / 5849 LL DEFL OK

BEAM DESIGNATION: WOOD BEAM - B24 LOAD DURATION FACTOR (Cd): 1

BEAM SPAN: 5.5 ft. REPETITIVE USE FACTOR (Cru): 1

LOADING:	8.5 ft	*	(	20	+	20	)			
	2 ft	*	(	32.5	+	40	)			
	10 ft	*	(	12	+	0	)			
				355	+	250	plf	=	605	plf

ALLOWABLE DEFLECTION: Total Load - TL: L / 240 Live Load - LL: L / 360

DESIGN: 1 6 x 10 DF#2 Fv = 85 psi.

Fb = 900 psi.

b = 5.5 " d = 9.5 " Cf = 1.026

E = 1,300 ksi.

End Reaction: R = 976 lbs + 688 lbs = 1,664 lbs.

Shear: V = 1,185 lbs fv= 34 psi < 85 psi SHEAR OK

Flexure: M = 2,288 lb-f fb= 332 psi < 924 psi FLEXURE OK

Deflection: Total Load Deflection = 0.02 in = L / 2707 TL DEFL OK

Live Load Deflection = 0.01 in = L / 6550 LL DEFL OK

THANG LE, S.E.
STRUCTURAL ENGINEER

3029 Eisenhower Ave., Arcadia, CA 91006

Phone: (626) 731-1539 Fax: (626) 447-3400

SHEET NO: B24

PROJECT NO:

Project: ESSEX TOWER

SIMPLY SUPPORTED WOOD BEAM

BEAM DESIGNATION: WOOD BEAM - B25 LOAD DURATION FACTOR (Cd): 1

BEAM SPAN: 4.5 ft. REPETITIVE USE FACTOR (Cru): 1

LOADING:	8 ft	*	(	20	+	20	)			
	4 ft	*	(	32.5	+	40	)			
	10 ft	*	(	12	+	0	)			
				410	+	320	plf	=	730	plf

ALLOWABLE DEFLECTION: Total Load - TL: L / 240 Live Load - LL: L / 360

DESIGN: 1 6 x 10 DF#2

Fv = 85 psi.
Fb = 875 psi.
Cf = 1.026
E = 1,300 ksi.

b = 5.5 " d = 9.5 "

End Reaction:	R =	923	lbs	+	720	lbs	=	1,643	lbs		
Shear:	V =	1,065	lbs	fv=	31	psi	<	85	psi	SHEAR OK	
Flexure:	M =	1,848	lb-f	fb=	268	psi	<	898	psi	FLEXURE OK	
Deflection:	Total Load Deflection =				0.01	in	=	L / 4096		TL DEFL OK	
	Live Load Deflection =				0.01	in	=	L / 9343		LL DEFL OK	

THANG LE, S.E.
STRUCTURAL ENGINEER

3029 Eisenhower Ave., Arcadia, CA 91006
Phone: (626) 731-1539 Fax: (626) 447-3400

SHEET NO: _____

PROJECT NO: _____

Project: **ESSEX TOWER**

SIMPLY SUPPORTED WOOD BEAM

LOAD DURATION FACTOR (Cd): 1
BEAM DESIGNATION: **WOOD BEAM - B26** REPETITIVE USE FACTOR (Cru): 1
BEAM SPAN: 8 ft ALLOWABLE TOTAL LOAD DEFLECTION: L / 240
ALLOWABLE LIVE LOAD DEFLECTION: L / 360

				DL		LL					
w =	10	ft	* (	12	+	0	)	=	120	lbs/ft	
P1 =	5140	sf	* (	1	+	1	)	=	5140	lbs	at 4 ft
P2 =		sf	* (		+		)	=	0	lbs	at
P3 =		sf	* (		+		)	=	0	lbs	at
wa1 =		ft	* (		+		)	=	0	lbs/ft	at
wb1 =		ft	* (		+		)	=	0	lbs/ft	at
wa2 =		ft	* (		+		)	=	0	lbs/ft	at
wb2 =		ft	* (		+		)	=	0	lbs/ft	at

1 3.5 x 14 PSL

b = 3.5 in Fv = 290 psi E = 2000 psi
d = 14 in Cv = 1.000 Fb = 2600 psi

End Reactions:	R,L =	480	lbs	+	2,570	lbs	=	3,050	lbs	
	R,R =	480	lbs	+	2,570	lbs	=	3,050	lbs	
Shear:	V_{max} =	3,050	lbs				fv =	93	psi < 290 psi	**<< OK**
Flexure:	M =	11,240	lb-ft	at	4 ft		fb =	1,180	psi < 2,600 psi	**<< OK**
Deflection:	Total Load Deflection = 0.081 in						=	L / 1187	TL DEFLECTION OK	
	Live Load Deflection = 0.04 in						=	L / 2373	LL DEFLECTION OK	

THANG LE, S.E.
STRUCTURAL ENGINEER

3029 Eisenhower Ave., Arcadia, CA 91006

Phone: (626) 731-1539 Fax: (626) 447-3400

SHEET NO: B26

PROJECT NO:

Project: ESSEX TOWER

SIMPLY SUPPORTED WOOD BEAM

BEAM DESIGNATION: WOOD BEAM - B27 LOAD DURATION FACTOR (Cd): 1

BEAM SPAN: 8 ft. REPETITIVE USE FACTOR (Cru): 1

LOADING:	7.5	ft	*	(	32.5	+	40	)		
	0	ft	*	(	0	+	0	)		
	0	ft	*	(	0	+	0	)		
					244	+	300	plf	=	544 plf

ALLOWABLE DEFLECTION: Total Load - TL: L / 240 Live Load - LL: L / 360

DESIGN: 1 4 x 10 DF#2

Fv = 180 psi.
Fb = 900 psi.
Cf = 1.200
E = 1,600 ksi.

b = 3.5 " d = 9.25 "

End Reaction: R = 975 lbs + 1,200 lbs = 2,175 lbs

Shear: V = 1,756 lbs fv= 81 psi < 180 psi SHEAR OK

Flexure: M = 4,350 lb-f fb= 1,046 psi < 1,080 psi FLEXURE OK

Deflection: Total Load Deflection = 0.14 in = L / 708 TL DEFL OK

Live Load Deflection = 0.07 in = L / 1282 LL DEFL OK

THANG LE, S.E.
STRUCTURAL ENGINEER

3029 Eisenhower Ave., Arcadia, CA 91006
Phone: (626) 731-1539 Fax: (626) 447-3400

SHEET NO: _____

PROJECT NO: _____

Project: **Essex Tower**

SIMPLY SUPPORTED WOOD BEAM

LOAD DURATION FACTOR (Cd): 1
BEAM DESIGNATION: **WOOD BEAM - B28** REPETITIVE USE FACTOR (Cru): 1
BEAM SPAN: 6.5 ft ALLOWABLE TOTAL LOAD DEFLECTION: L / 240
ALLOWABLE LIVE LOAD DEFLECTION: L / 360

				DL		LL					
w =	10	ft	* (	12	+	0	)	=	120	lbs/ft	
P1 =	4314	sf	* (	1	+	1	)	=	4314	lbs	at 5 ft
P2 =		sf	* (		+		)	=	0	lbs	at
P3 =		sf	* (		+		)	=	0	lbs	at
wa1 =		ft	* (		+		)	=	0	lbs/ft	at
wb1 =		ft	* (		+		)	=	0	lbs/ft	at
wa2 =		ft	* (		+		)	=	0	lbs/ft	at
wb2 =		ft	* (		+		)	=	0	lbs/ft	at

1 5.25 x 9.25 PSL

b = 5.25 in Fv = 165 psi E = 2000 psi
d = 9.25 in Cv = 1.000 Fb = 2600 psi

End Reactions:	R,L =	390	lbs	+	996	lbs	=	1,386	lbs		
	R,R =	390	lbs	+	3,318	lbs	=	3,708	lbs		
Shear:	V_{max} =	3,708	lbs				fv =	115	psi < 165 psi		**<< OK**
Flexure:	M =	5,611	lb-ft	at	5 ft		fb =	899	psi < 2,600 psi		**<< OK**
Deflection:	Total Load Deflection = 0.062 in						=	L / 1266	TL DEFLECTION OK		
	Live Load Deflection = 0.031 in						=	L / 2532	LL DEFLECTION OK		

THANG LE, S.E.
STRUCTURAL ENGINEER

3029 Eisenhower Ave., Arcadia, CA 91006

Phone: (626) 731-1539 Fax: (626) 447-3400

Project: ESSEX TOWER

SIMPLY SUPPORTED WOOD BEAM

BEAM DESIGNATION: WOOD BEAM - B29 LOAD DURATION FACTOR (Cd): 1

BEAM SPAN: 6.5 ft. REPETITIVE USE FACTOR (Cru): 1

LOADING:	7.5 ft	*	(	32.5	+	40	)			
	0 ft	*	(	0	+	0	)			
	0 ft	*	(	0	+	0	)			
				244	+	300	plf	=	544	plf

ALLOWABLE DEFLECTION: Total Load - TL: L / 240 Live Load - LL: L / 360

DESIGN:	1	4	x	10	DF#2				Fv =	180	psi.
									Fb =	900	psi.
	b =	3.5 "	d =	9.25 "					Cf =	1.200	
									E =	1,600	ksi.
End Reaction:	R =	792	lbs	+	975	lbs	=	1,767	lbs		
Shear:	V =	1,348	lbs	fv=	62	psi	<	180	psi	SHEAR OK	
Flexure:	M =	2,872	lb-f	fb=	690	psi	<	1,080	psi	FLEXURE OK	
Deflection:	Total Load Deflection =				0.06	in	= L /	1319		TL DEFL OK	
	Live Load Deflection =				0.03	in	= L /	2391		LL DEFL OK	

THANG LE, S.E.
STRUCTURAL ENGINEER

3029 Eisenhower Ave., Arcadia, CA 91006
Phone: (626) 731-1539 Fax: (626) 447-3400

SHEET NO: _____

PROJECT NO: _____

Project: **Essex Tower**

SIMPLY SUPPORTED WOOD BEAM

LOAD DURATION FACTOR (Cd): 1
BEAM DESIGNATION: **WOOD BEAM - B30** REPETITIVE USE FACTOR (Cru): 1
BEAM SPAN: 3.5 ft ALLOWABLE TOTAL LOAD DEFLECTION: L / 240
ALLOWABLE LIVE LOAD DEFLECTION: L / 360

				DL		LL					
w =	10	ft	* (	70.5	+	56	)	=	1265	lbs/ft	
P1 =	1767	sf	* (	1	+	1	)	=	1767	lbs	at 2 ft
P2 =		sf	* (		+		)	=	0	lbs	at
P3 =		sf	* (		+		)	=	0	lbs	at
wa1 =		ft	* (		+		)	=	0	lbs/ft	at
wb1 =		ft	* (		+		)	=	0	lbs/ft	at
wa2 =		ft	* (		+		)	=	0	lbs/ft	at
wb2 =		ft	* (		+		)	=	0	lbs/ft	at

1 4 x 10 DF#2

b = 3.5 in Fv = 180 psi E = 1600 psi
d = 9.25 in Cf = 1.200 Fb = 875 psi

End Reactions:	R,L =	2,214	lbs	+	757	lbs	=	2,971	lbs		
	R,R =	2,214	lbs	+	1,010	lbs	=	3,223	lbs		
Shear:	V_{max} =	3,223	lbs				fv =	149	psi < 180 psi		**<< OK**
Flexure:	M =	3,452	lb-ft	at	2 ft		fb =	830	psi < 875 psi		**<< OK**
Deflection:	Total Load Deflection = 0.021 in						=	L / 2038	TL DEFLECTION OK		
	Live Load Deflection = 0.01 in						=	L / 4076	LL DEFLECTION OK		

THANG LE, S.E.
STRUCTURAL ENGINEER

3029 Eisenhower Ave., Arcadia, CA 91006

Phone: (626) 731-1539 Fax: (626) 447-3400

SHEET NO: B30

PROJECT NO:

Project: ESSEX TOWER

SIMPLY SUPPORTED WOOD BEAM

BEAM DESIGNATION: WOOD BEAM - B31 LOAD DURATION FACTOR (Cd): 1

BEAM SPAN: 8 ft. REPETITIVE USE FACTOR (Cru): 1

LOADING:	7.5	ft	*	(	32.5	+	40	)		
	0	ft	*	(	0	+	0	)		
	0	ft	*	(	0	+	0	)		
					244	+	300	plf	=	544 plf

ALLOWABLE DEFLECTION: Total Load - TL: L / 240 Live Load - LL: L / 360

DESIGN: 1 4 x 10 DF#2

Fv = 180 psi.
Fb = 900 psi.
Cf = 1.200
E = 1,600 ksi.

b = 3.5 " d = 9.25 "

End Reaction: R = 975 lbs + 1,200 lbs = 2,175 lbs

Shear: V = 1,756 lbs fv= 81 psi < 180 psi SHEAR OK

Flexure: M = 4,350 lb-f fb= 1,046 psi < 1,080 psi FLEXURE OK

Deflection: Total Load Deflection = 0.14 in = L / 708 TL DEFL OK

Live Load Deflection = 0.07 in = L / 1282 LL DEFL OK

THANG LE, S.E.
STRUCTURAL ENGINEER

3029 Eisenhower Ave., Arcadia, CA 91006

Phone: (626) 731-1539 Fax: (626) 447-3400

Project: ESSEX TOWER

SIMPLY SUPPORTED WOOD BEAM

BEAM DESIGNATION: WOOD BEAM - B32 LOAD DURATION FACTOR (Cd): 1

BEAM SPAN: 10 ft. REPETITIVE USE FACTOR (Cru): 1

LOADING:	2.5 ft	*	(	20	+	20	)			
	0 ft	*	(	0	+	0	)			
	0 ft	*	(	0	+	0	)			
				50	+	50	plf	=	100	plf

ALLOWABLE DEFLECTION: Total Load - TL: L / 240 Live Load - LL: L / 360

DESIGN: 1 4 x 10 DF#2 Fv = 95 psi.

Fb = 875 psi.

b = 3.5 " d = 9.25 " Cf = 1.200

E = 1,600 ksi.

End Reaction: R = 250 lbs + 250 lbs = 500 lbs

Shear: V = 423 lbs fv= 20 psi < 95 psi SHEAR OK

Flexure: M = 1,250 lb-f fb= 301 psi < 1,050 psi FLEXURE OK

Deflection: Total Load Deflection = 0.06 in = L / 1970 TL DEFL OK

Live Load Deflection = 0.03 in = L / 3940 LL DEFL OK

BEAM DESIGNATION: WOOD BEAM - B33 LOAD DURATION FACTOR (Cd): 1

BEAM SPAN: 14 ft. REPETITIVE USE FACTOR (Cru): 1

LOADING:	2.5 ft	*	(	20	+	20	)			
	0 ft	*	(	0	+	0	)			
	0 ft	*	(	0	+	0	)			
				50	+	50	plf	=	100	plf

ALLOWABLE DEFLECTION: Total Load - TL: L / 240 Live Load - LL: L / 360

DESIGN: 1 4 x 10 DF#2 Fv = 95 psi.

Fb = 875 psi.

b = 3.5 " d = 9.25 " Cf = 1.200

E = 1,600 ksi.

End Reaction: R = 350 lbs + 350 lbs = 700 lbs.

Shear: V = 623 lbs fv= 29 psi < 95 psi SHEAR OK

Flexure: M = 2,450 lb-f fb= 589 psi < 1,050 psi FLEXURE OK

Deflection: Total Load Deflection = 0.23 in = L / 718 TL DEFL OK

Live Load Deflection = 0.12 in = L / 1436 LL DEFL OK

THANG LE, S.E.
STRUCTURAL ENGINEER

3029 Eisenhower Ave., Arcadia, CA 91006

Phone: (626) 731-1539 Fax: (626) 447-3400

SHEET NO: B32

PROJECT NO:

Project: ESSEX TOWER

SIMPLY SUPPORTED WOOD BEAM

BEAM DESIGNATION: WOOD BEAM - B34 LOAD DURATION FACTOR (Cd): 1

BEAM SPAN: 10 ft. REPETITIVE USE FACTOR (Cru): 1

LOADING:	2.5	ft	*	(	32.5	+	40	)		
	0	ft	*	(	0	+	0	)		
	0	ft	*	(	0	+	0	)		
					81	+	100	plf	=	181 plf

ALLOWABLE DEFLECTION: Total Load - TL: L / 240 Live Load - LL: L / 360

DESIGN: 1 4 x 10 DF#2

Fv = 95 psi.
Fb = 875 psi.
Cf = 1.200
E = 1,600 ksi.

b = 3.5 " d = 9.25 "

End Reaction: R = 406 lbs + 500 lbs = 906 lbs

Shear: V = 767 lbs fv= 36 psi < 95 psi SHEAR OK

Flexure: M = 2,266 lb-f fb= 545 psi < 1,050 psi FLEXURE OK

Deflection: Total Load Deflection = 0.11 in = L / 1087 TL DEFL OK

Live Load Deflection = 0.06 in = L / 1970 LL DEFL OK

THANG LE, S.E.
STRUCTURAL ENGINEER
Phone: (626) 731-1539 Fax: (626) 447-3400

WOOD FRAME
LATERAL ANALYSIS

C1

Hazards by Location

Search Information

Address:	44948 10th St W, Lancaster, CA 93534, USA
Coordinates:	34.7004966, -118.1476057
Elevation:	2338 ft
Timestamp:	2020-12-10T00:36:20.678Z
Hazard Type:	Seismic
Reference Document:	ASCE7-16
Risk Category:	II
Site Class:	D-default

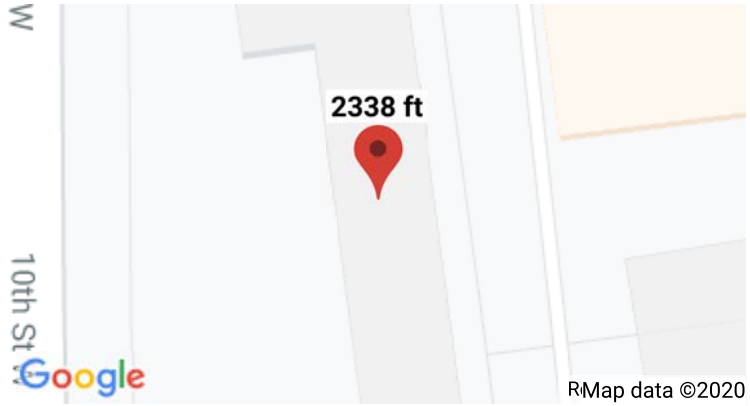

Basic Parameters

Name	Value	Description
S_S	1.5	MCE_R ground motion (period=0.2s)
S_1	0.6	MCE_R ground motion (period=1.0s)
S_{MS}	1.8	Site-modified spectral acceleration value
S_{M1}	* null	Site-modified spectral acceleration value
S_{DS}	1.2	Numeric seismic design value at 0.2s SA
S_{D1}	* null	Numeric seismic design value at 1.0s SA

* See Section 11.4.8

Additional Information

Name	Value	Description
SDC	* null	Seismic design category
F_a	1.2	Site amplification factor at 0.2s
F_v	* null	Site amplification factor at 1.0s
CR_S	0.891	Coefficient of risk (0.2s)
CR_1	0.883	Coefficient of risk (1.0s)
PGA	0.563	MCE_G peak ground acceleration
F_{PGA}	1.2	Site amplification factor at PGA
PGA_M	0.676	Site modified peak ground acceleration

C2

T_L	12	Long-period transition period (s)
SsRT	1.552	Probabilistic risk-targeted ground motion (0.2s)
SsUH	1.742	Factored uniform-hazard spectral acceleration (2% probability of exceedance in 50 years)
SsD	1.5	Factored deterministic acceleration value (0.2s)
S1RT	0.638	Probabilistic risk-targeted ground motion (1.0s)
S1UH	0.723	Factored uniform-hazard spectral acceleration (2% probability of exceedance in 50 years)
S1D	0.6	Factored deterministic acceleration value (1.0s)
PGAd	0.563	Factored deterministic acceleration value (PGA)

* See Section 11.4.8

The results indicated here DO NOT reflect any state or local amendments to the values or any delineation lines made during the building code adoption process. Users should confirm any output obtained from this tool with the local Authority Having Jurisdiction before proceeding with design.

Disclaimer

Hazard loads are provided by the U.S. Geological Survey Seismic Design Web Services.

While the information presented on this website is believed to be correct, ATC and its sponsors and contributors assume no responsibility or liability for its accuracy. The material presented in the report should not be used or relied upon for any specific application without competent examination and verification of its accuracy, suitability and applicability by engineers or other licensed professionals. ATC does not intend that the use of this information replace the sound judgment of such competent professionals, having experience and knowledge in the field of practice, nor to substitute for the standard of care required of such professionals in interpreting and applying the results of the report provided by this website. Users of the information from this website assume all liability arising from such use. Use of the output of this website does not imply approval by the governing building code bodies responsible for building code approval and interpretation for the building site described by latitude/longitude location in the report.

PROJECT :		PAGE :	
CLIENT :		DESIGN BY :	
JOB NO. :	DATE :	REVIEW BY :	

Wind Analysis for Low-rise Building, Based on 2018 IBC/ASCE 7-16 — **ESSEX TOWER**

INPUT DATA

Exposure category (B, C or D, ASCE 7-16 26.7.3)		C	
Importance factor (ASCE 7-16 Table 1.5-2)	I_w =	1.00	for all Category
Basic wind speed (ASCE 7-16 26.5.1 or 2018 IBC)	V =	**95**	*mph, (152.89 kph)*
Topographic factor (ASCE 7-16 26.8 & Table 26.8-1)	K_{zt} =	1	Flat
Building height to eave	h_e =	20	*ft, (6.10 m)*
Building height to ridge	h_r =	23	*ft, (7.01 m)*
Building length	L =	217.5	*ft, (66.29 m)*
Building width	B =	145.25	*ft, (44.27 m)*
Effective area of components (or Solar Panel area)	A =	3661	ft^2, <== Overhang? (Yes or No) Yes
		(340.56	*m^2)*

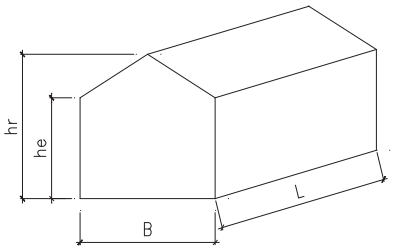

DESIGN SUMMARY

Max horizontal force normal to building length, L, face	=	74.82 *kips, (333 kN), SD level (LRFD level), Typ.*
Max horizontal force normal to building length, B, face	=	49.97 *kips, (222 kN)*
Max total horizontal torsional load	=	1306.03 *ft-kips, (1771 kN-m)*
Max total upward force	=	505.47 *kips, (2248 kN)*

ANALYSIS

SEISMIC GOVERNS

Velocity pressure

$q_h = 0.00256\ K_z K_{zt} K_d K_e V^2$ = **17.91** psf

where: q_h = velocity pressure at mean roof height, h. (Eq. 26.10-1 page 268)

K_z = velocity pressure exposure coefficient evaluated at height, h, (Tab. 26.10-1, pg 268) = **0.91**

K_d = wind directionality factor. (Tab. 26.6-1, for building, page 266) = **0.85**

h = mean roof height = **21.50** ft

K_e = ground elevation factor. (***1.0*** per Sec. 26.9, page 268) **< 60 ft, [Satisfactory]** (ASCE 7-16 26.2.1)

< Min (L, B), [Satisfactory] (ASCE 7-16 26.2.2)

Design pressures for MWFRS

$p = q_h\ [(G\ C_{pf}) - (G\ C_{pi})]$

where: p = pressure in appropriate zone. (Eq. 28.3-1, page 311). p_{min} = **16** psf (ASCE 7-16 28.3.4)

$G\ C_{pf}$ = product of gust effect factor and external pressure coefficient, see table below. (Fig. 28.3-1, page 312 & 313)

$G\ C_{pi}$ = product of gust effect factor and internal pressure coefficient.(Tab. 26.13-1, Enclosed Building, page 271)

= **0.18** or **-0.18**

a = width of edge strips, Fig 28.3-1, page 312, MAX[MIN(0.1B, 0.1L, 0.4h), MIN(0.04B, 0.04L), 3] = **8.60** **ft**

Net Pressures (psf), Basic Load Cases

Surface	Roof angle θ = 2.37			Roof angle θ = 0.00		
	$G\ C_{pf}$	Net Pressure with		$G\ C_{pf}$	Net Pressure with	
		$(+GC_{pi})$	$(-GC_{pi})$		$(+GC_{pi})$	$(-GC_{pi})$
1	0.40	3.94	10.39	-0.45	-11.28	-4.84
2	-0.69	-15.58	-9.13	-0.69	-15.58	-9.13
3	-0.37	-9.85	-3.40	-0.37	-9.85	-3.40
4	-0.29	-8.42	-1.97	-0.45	-11.28	-4.84
5				0.40	3.94	10.39
6				-0.29	-8.42	-1.97
1E	0.61	7.70	14.15	-0.48	-11.82	-5.37
2E	-1.07	-22.39	-15.94	-1.07	-22.39	-15.94
3E	-0.53	-12.72	-6.27	-0.53	-12.72	-6.27
4E	-0.43	-10.93	-4.48	-0.48	-11.82	-5.37
5E				0.61	7.70	14.15
6E				-0.43	-10.93	-4.48

Net Pressures (psf), Torsional Load Cases

Surface	Roof angle θ = 2.37		
	$G\ C_{pf}$	Net Pressure with	
		$(+GC_{pi})$	$(-GC_{pi})$
1T	0.40	0.99	2.60
2T	-0.69	-3.90	-2.28
3T	-0.37	-2.46	-0.85
4T	-0.29	-2.10	-0.49
Surface	Roof angle θ = 0.00		
	$G\ C_{pf}$	Net Pressure with	
		$(+GC_{pi})$	$(-GC_{pi})$
5T	0.40	0.99	2.60
6T	-0.29	-2.10	-0.49

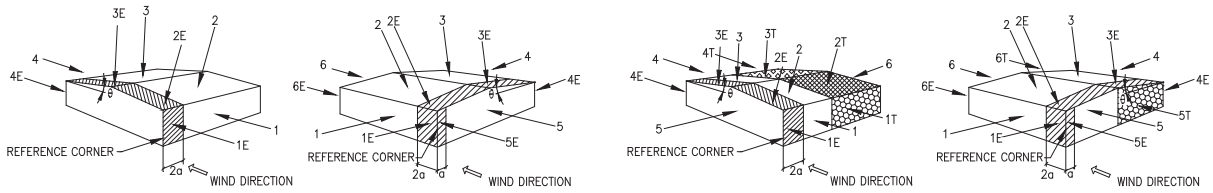

Load Case A (Transverse) Load Case B (Longitudinal) — Basic Load Cases

Load Case A (Transverse) Load Case B (Longitudinal) — Torsional Load Cases

Basic Load Case A (Transverse Direction)

Surface	Area (ft^2)	Pressure (k) with ($+GC_{pi}$)	Pressure (k) with ($-GC_{pi}$)
1	4006	15.78	41.61
2	14559	-226.86	-132.99
3	14559	-143.42	-49.54
4	4006	-33.72	-7.89
1E	344	2.65	4.87
2E	1250	-27.99	-19.93
3E	1250	-15.90	-7.84
4E	344	-3.76	-1.54
Σ	Horiz.	51.97	51.97
	Vert.	-413.81	-210.12
Min. wind 28.4.4	Horiz.	74.82	74.82
	Vert.	-505.47	-505.47

Basic Load Case B (Longitudinal Direction)

Surface	Area (ft^2)	Pressure (k) with ($+GC_{pi}$)	Pressure (k) with ($-GC_{pi}$)
2	14559	-226.86	-132.99
3	14559	-143.42	-49.54
5	2776	10.94	28.84
6	2776	-23.37	-5.47
2E	1250	-27.99	-19.93
3E	1250	-15.90	-7.84
5E	347	2.67	4.91
6E	347	-3.79	-1.55
Σ	Horiz.	40.77	40.77
	Vert.	-371.08	-179.02
Min. wind 28.4.4	Horiz.	49.97	49.97
	Vert.	-505.47	-505.47

Torsional Load Case A (Transverse Direction)

Surface	Area (ft^2)	Pressure (k) with ($+GC_{pi}$)	Pressure (k) with ($-GC_{pi}$)	Torsion (ft-k) ($+GC_{pi}$)	Torsion (ft-k) ($-GC_{pi}$)
1	1831	7.21	19.02	361	952
2	6654	-103.69	-60.78	-214	-126
3	6654	-65.55	-22.64	135	47
4	1831	-15.41	-3.61	772	181
1E	344	2.65	4.87	265	487
2E	1250	-27.99	-19.93	-116	-82
3E	1250	-15.90	-7.84	66	32
4E	344	-3.76	-1.54	376	154
1T	2175	2.14	5.65	-116	-307
2T	7905	-30.79	-18.05	69	41
3T	7905	-19.47	-6.72	-44	-15
4T	2175	-4.58	-1.07	-249	-58
Total Horiz. Torsional Load, M_T				1306	1306

Torsional Load Case B (Longitudinal Direction)

Surface	Area (ft^2)	Pressure (k) with ($+GC_{pi}$)	Pressure (k) with ($-GC_{pi}$)	Torsion (ft-k) ($+GC_{pi}$)	Torsion (ft-k) ($-GC_{pi}$)
2	14559	-226.86	-132.99	-40	-24
3	14559	-143.42	-49.54	25	9
5	1214	4.78	12.61	150	396
6	1214	-10.22	-2.39	321	75
2E	1250	-27.99	-19.93	121	86
3E	1250	-15.90	-7.84	-69	-34
5E	347	2.67	4.91	183	335
6E	347	-3.79	-1.55	259	106
5T	1561	1.54	4.06	-55	-144
6T	1561	-3.29	-0.77	-117	-27
Total Horiz. Torsional Load, M_T				778.5	778.5

Design pressures for components and cladding

$p = q_h[(G\,C_p) - (G\,C_{pi})]$

where: p = pressure on component. (Eq. 30.3-1, pg 334)

p_{min} = 16.00 psf (ASCE 7-16 30.2.2)

$G\,C_p$ = external pressure coefficient.

see table below. (ASCE 7-16 30.3.2)

θ = 2.37 °

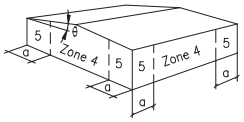

Walls

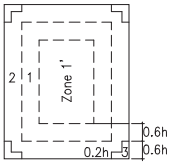

Roof θ≤7°

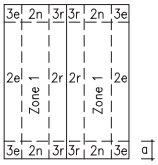

Roof θ>7°

Comp.	Effective Area (ft^2)	Zone 1		Zone 1'		Zone 2		Zone 2e		Zone 2n		Zone 2r	
		GC_P	$-GC_P$	GC_P	$-GC_P$	GC_P	$-GC_P$	GC_P	$-GC_P$	GC_P	$-GC_P$	GC_P	$-GC_P$
	3661	0.20	-1.00	0.20	-1.00	0.20	-1.10	-	-	-	-	-	-
	Effective Area (ft^2)	Zone 3		Zone 3e		Zone 3r		Zone 4		Zone 5			
		GC_P	$-GC_P$	GC_P	$-GC_P$	GC_P	$-GC_P$	GC_P	$-GC_P$	GC_P	$-GC_P$		
	3661	0.20	-1.10	-	-	-	-	0.63	-0.72	0.63	-0.72		

Comp. & Cladding Pressure (psf)	Zone 1		Zone 1'		Zone 2		Zone 2e		Zone 2n		Zone 2r	
	Positive	*Negative*	*Positive*	*Negative*	*Positive*	*Negative*	*Positive*	*Negative*	*Positive*	*Negative*	*Positive*	*Negative*
	16.00	-21.13	16.00	-21.13	16.00	-22.93						
	Zone 3		Zone 3e		Zone 3r		Zone 4		Zone 5			
	Positive	*Negative*	*Positive*	*Negative*	*Positive*	*Negative*	*Positive*	*Negative*	*Positive*	*Negative*		
	16.00	-22.93					16.00	-16.12	16.00	-16.12		

*(The Max Pressure **22.93** psf)*

MULTI-STORY LATERAL ANALYSIS - SEISMIC

(PER ASCE 7-16, CH 12.8 - EQUIVALENT LATERAL FORCE PROCEDURE)

SHEET NO. _____

PROJECT NO. _____

PROJECT

44948 10th Street West

BUILDING DESCRIPTION

Two story wood-frame on concrete podium slab.
(Using Two Stage Analysis Procedure per ASCE 7-16 12.2.3.2)

PART ONE OF TWO STAGE PROCEDURE

SEISMIC DESIGN CRITERIA

Site Class	D	Stiff Soil	(ASCE 7-10, Sec. 11.4.2)
Importance Factor, I_e	1.0		(ASCE 7-10, Table 1.5-2)

MAPPED ACCELERATION PARAMETERS

MCE_R, spectral response acceleration at short periods, S_s	1.500 g		(Per Soils Report)
MCE_R, spectral response acceleration at a period of 1 sec, S_1	0.600 g		(Per Soils Report)
Seismic Design Category	E		(ASCE 7-16, Sec. 11.6)
Short-period site coefficient, F_a	1.2	$S_s > 1.25$	(ASCE 7-16, Table 11.4-1)
Long-period site coefficient, F_v	1.7	$S_1 > 0.5$	(ASCE 7-16, Table 11.4-2)

PARAMETERS ADJUSTED FOR SITE CLASS EFFECTS

MCE_R, spectral response acceleration at short periods, S_{MS}	1.800 g	(ASCE 7-16, Sec. 11.4.3)
MCE_R, spectral response acceleration at a period of 1 sec, S_{M1}	1.020 g	(ASCE 7-16, Sec. 11.4.3)

DESIGN SPECTRAL ACCELERATION PARAMETERS

Design earthquake, spectral response acceleration at short periods, S_{DS}	1.200 g	(ASCE 7-16, Sec. 11.4.4)
Design earthquake, spectral response acceleration at a period of 1 sec, S_{D1}	0.680 g	(ASCE 7-16, Sec. 11.4.4)

SEISMIC FORCE-RESISTING SYSTEM

Light-Framed Shear Wall		
Response Modification Coefficient, R^a	6.5	(ASCE 7-16, Table 12.2-1)
Wall weight	12 psf	

BUILDING PERIOD

For structure type, "all other structural systems"		
Approximate period coefficient, Ct	0.020	(ASCE 7-16, Table 12.8-2)
Approximate period coefficient, x	0.75	(ASCE 7-16, Table 12.8-2)
Structural Height, h_n	20.00 ft	(ASCE 7-16, Sec. 11.2)
Approximate Fundamental Period, T_a	0.189 s	(ASCE 7-16, Sec. 12.8.2)
Long-period transition period, T_L	12 s	(ASCE 7-16, Fig. 22-12)
Distribution exponent, k	1	(ASCE 7-16, Sec. 12.8.3)

BASE SHEAR (STRENGTH)

Calculated Seismic Response Coefficient, C_s	0.185	OK	(ASCE 7-16, Sec. 12.8.1.1)
Max. Seismic Response Coefficient, C_s	0.553		(ASCE 7-16, Sec. 12.8.1.1)
Min. Seismic Response Coefficient, C_s	0.046		(ASCE 7-16, Sec. 12.8.1.1)
Effective Seismic Weight, W_{N-S}	1,600.2 kips		(ASCE 7-16, Sec. 12.7.2)
Redundancy Factor, ρ	1		(ASCE 7-16, Sec. 12.3.4)
Base Shear, V_{N-S}	295.4 kips		(ASCE 7-16, Sec. 12.8.1)

LEVEL	WALL HEIGHT [ft]	hx [ft]	FLOOR/ ROOF AREA [sf]	DEAD LOAD [psf]	Wx [kips]	$w_x h_x^k$	C_{VX}	F_X [kips]	V_X [kips]
Roof	10.00 ft	20.00 ft	25,004	23	575.08899	11,502	0.529	156.20	156.2
2nd Floor	10.00 ft	10.00 ft	25,004	41	1025.1586	10,252	0.471	139.23	295.4
1st Floor (Ground Level)	-	-	-	-	-	-	-	-	295.4

BASE SHEAR (SERVICE)

Calculated Seismic Response Coefficient, C_s	0.132	OK	(ASCE 7-16, Sec. 12.8.1.1)
Max. Seismic Response Coefficient, C_s	0.395		(ASCE 7-16, Sec. 12.8.1.1)
Min. Seismic Response Coefficient, C_s	0.053		(ASCE 7-16, Sec. 12.8.1.1)
Effective Seismic Weight, W_{N-S}	1,600.2 kips		(ASCE 7-16, Sec. 12.7.2)
Redundancy Factor, ρ	1		(ASCE 7-16, Sec. 12.3.4)
Base Shear, V_{N-S}	211.0 kips		(ASCE 7-16, Sec. 12.8.1)

LEVEL	WALL HEIGHT [ft]	h_x [ft]	FLOOR/ ROOF AREA [sf]	DEAD LOAD [psf]	W_x [kips]	$w_x h_x^k$	C_{VX}	F_X [kips]	V_X [kips]
Roof	10.00 ft	20.00 ft	25,004	23	575.08899	11,502	0.529	111.57	111.6
2nd Floor	10.00 ft	10.00 ft	25,004	41	1025.1586	10,252	0.471	99.45	211.0
1st Floor (Ground Level)	-	-	-	-	-	-	-	-	211.0

DIAPHRAGM FORCES

Redundancy Factor, ρ	1.0	(ASCE 7-16, Sec. 12.3.4)
$F_{px,\ min} = 0.2 S_{DS} I_e W_{px}$		(ASCE 7-16, Eq 12.10-2

LEVEL	W_{px} [kips]	ΣW_i [kips]	F_X [kips]	ΣF_i [kips]	F_{px} [kips]	$F_{px,\ min}$ [kips]	$F_{px,\ max}$ [kips]	$F_{px,\ design}$ [kips]
Roof	575.089	575.089	111.57	111.57	111.57	138.02	276.04	138.02
2nd Floor	1025.159	1600.248	99.45	211.02	135.19	246.04	492.08	246.04
1st Floor (Ground Level)	-	-	-	-	-	-	-	-

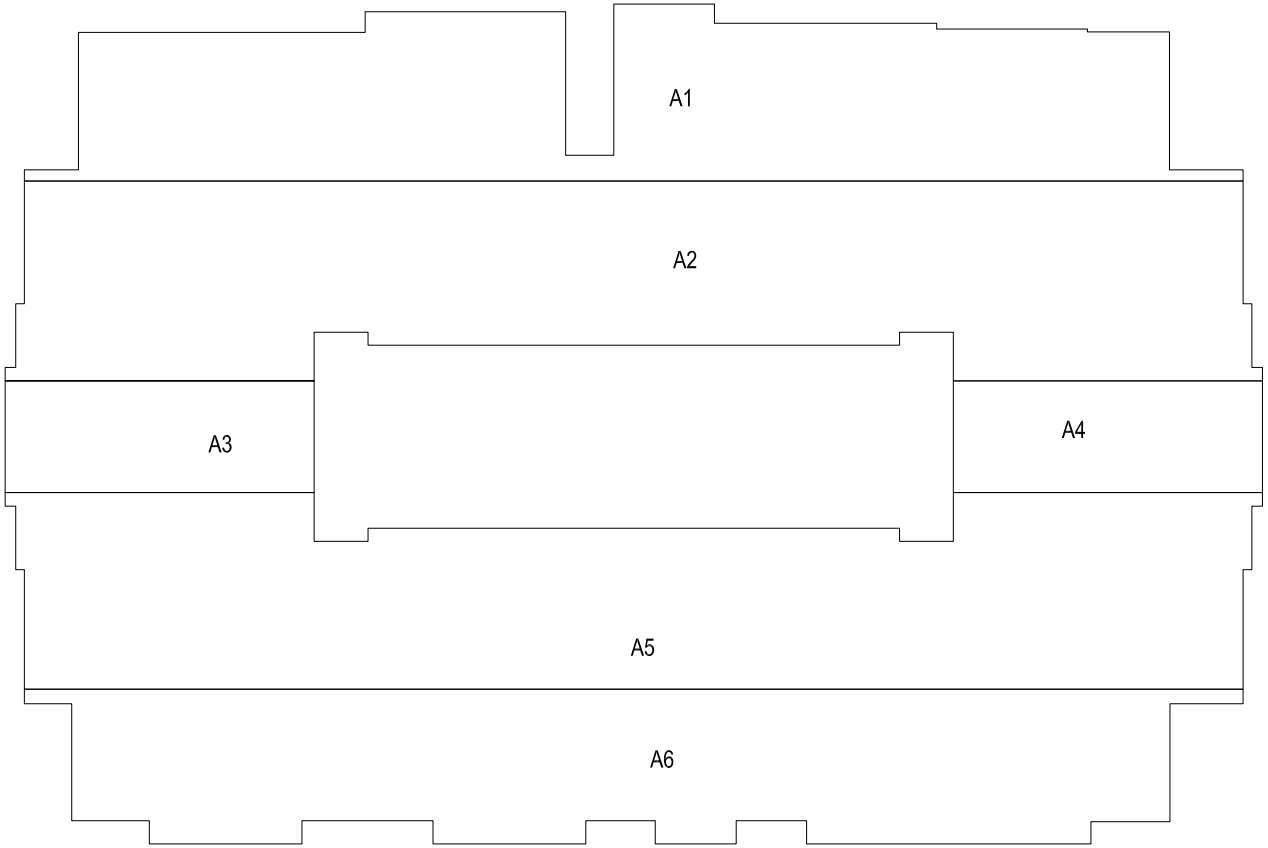

SUB-AREAS FOR EW DIRECTION

EW DIRECTION SHEAR WALL
ROOF LEVEL

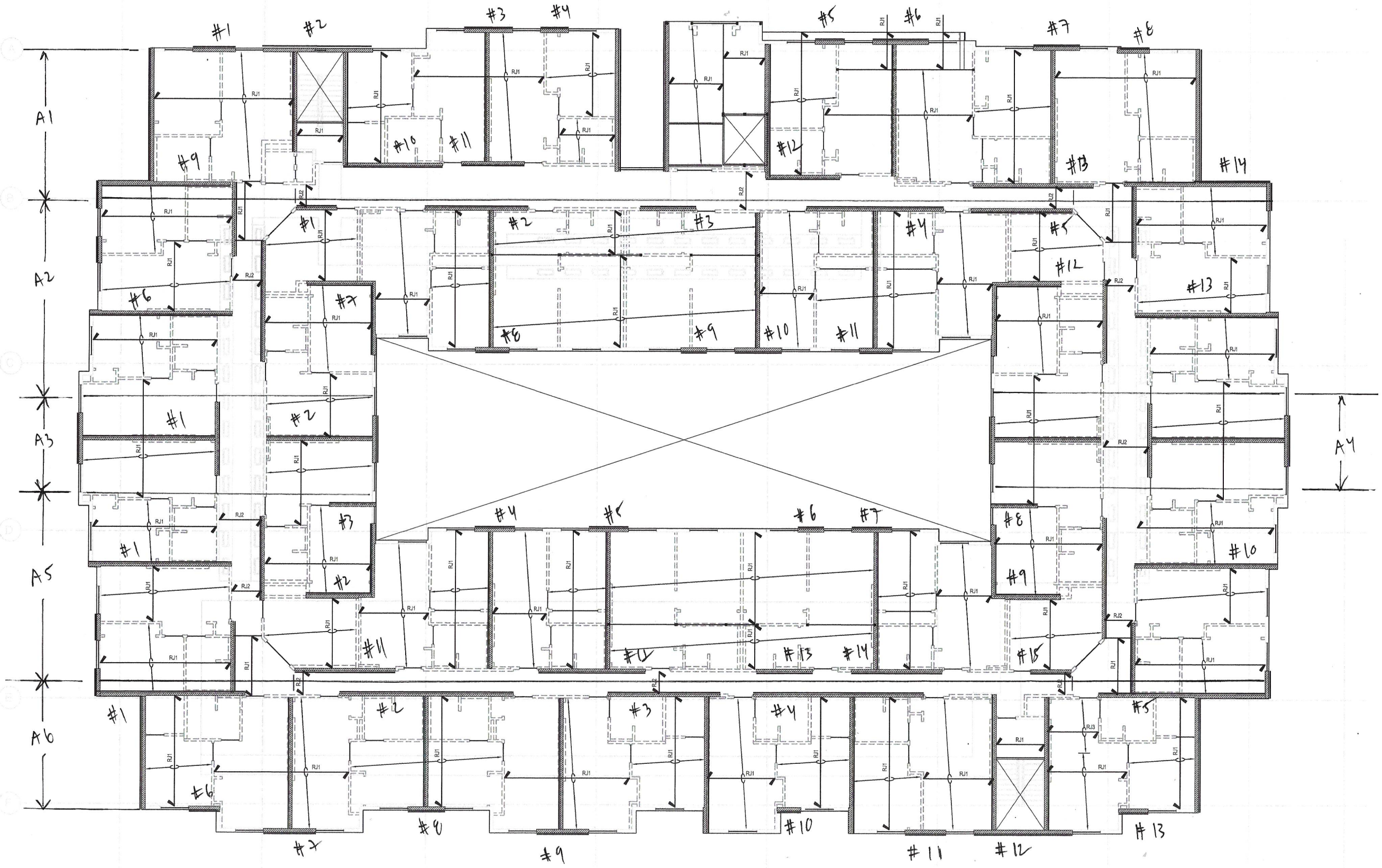

EW DIRECTION SHEAR WALL
LEVEL THREE

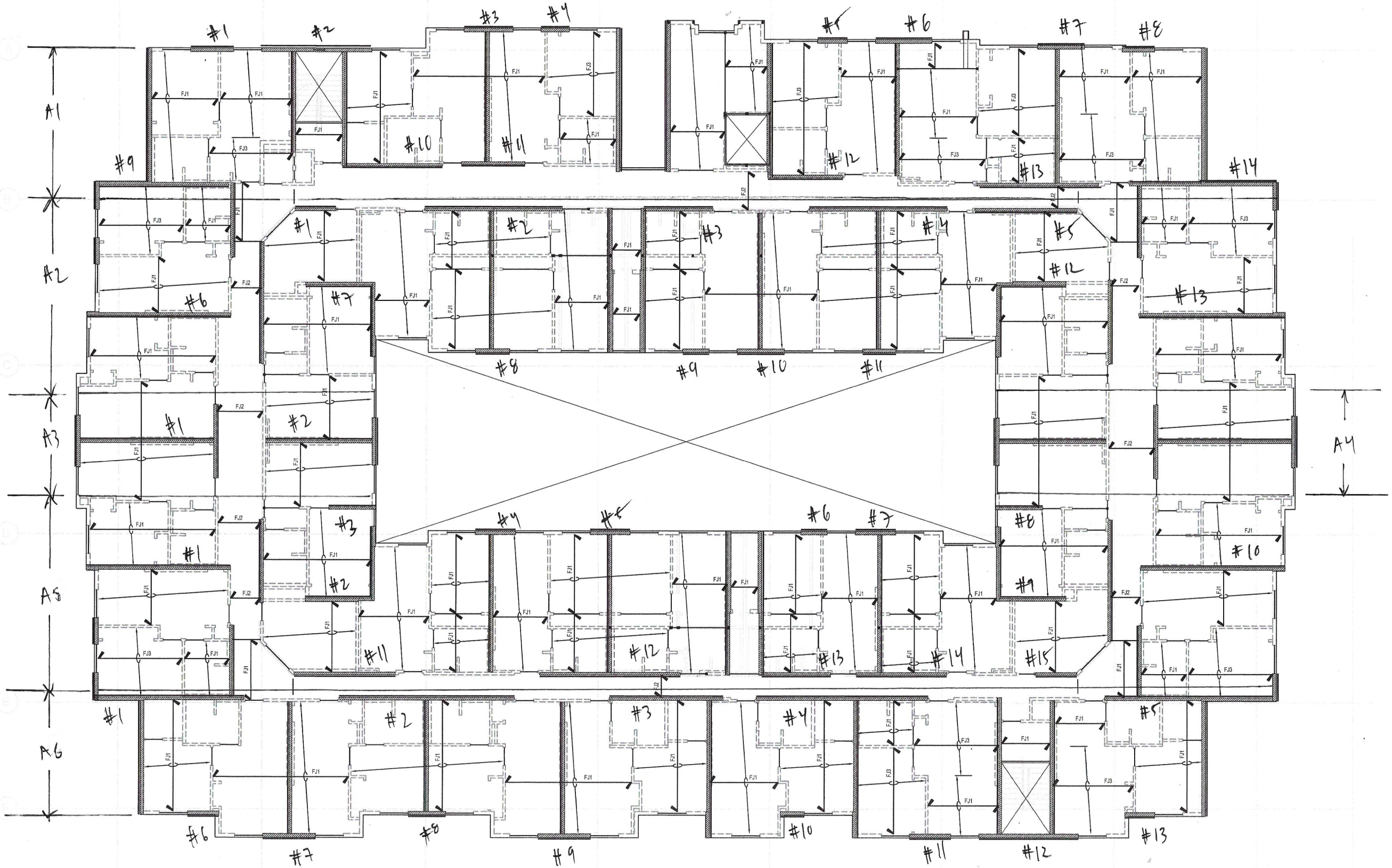

MULTI-STORY WOOD SHEAR WALL DESIGN BASED ON FLEXIBLE DIAPHRAGM ASSUMPTION

E-W DIRECTION ANALYSIS

Level	Shear Per Story	Cumulative Shear
Roof	111.57 kips	111.57 kips
2nd Floor	99.45 kips	211.02 kips

Level	Sub-Area #1	Sub-Area #2	Sub-Area #3	Sub-Area #4	Sub-Area #5	Sub-Area #6	Total Area
Roof	5,001 sq. ft	6,607 sq. ft	1,033 sq. ft	1,033 sq. ft	6,491 sq. ft	4,839 sq. ft	25,004 sq. ft
2nd Floor	5,001 sq. ft	6,607 sq. ft	1,033 sq. ft	1,033 sq. ft	6,491 sq. ft	4,839 sq. ft	25,004 sq. ft

Level	Sub-Area #1		Sub-Area #2		Sub-Area #3		Sub-Area #4	
	Shear Per Line	Cumulative Shear	Shear Per Line	Cumulative Shear	Shear Per Line	Cumulative Shear	Shear Per Line	Cumulative Shear
Roof	22.32 kips	22.32 kips	29.48 kips	29.48 kips	4.61 kips	4.61 kips	4.61 kips	4.61 kips
2nd Floor	19.89 kips	42.21 kips	26.28 kips	55.76 kips	4.11 kips	8.71 kips	4.11 kips	8.71 kips

Level	Sub-Area #5		Sub-Area #6	
	Shear Per Line	Cumulative Shear	Shear Per Line	Cumulative Shear
Roof	28.96 kips	28.96 kips	21.59 kips	21.59 kips
2nd Floor	25.82 kips	54.78 kips	19.25 kips	40.84 kips

DESIGN LATERAL FORCES ON SHEAR WALLS FOR E-W DIRECTION

SHEAR DISTRIBUTION FOR ROOF - SHEAR LINE EW-A1

WALL No.	Lw (ft)	Hw (ft)	Story Force Per Floor	Story Shear Per Line	Story Shear Cumulative	Distribution Factor	Aspect Ratio H/L	V (pounds)	Add'l Shear	(V/L)	Wall Type	OT (pound-ft)	ASD Uplift (pounds)	Simpson ATS Rod Model	Simpson ATS Capacity
1	7.5	10	111575	22318	22318	4%	1.33	925	0	123.30	A	9248	1321	MST72	5660
2	19.5	10	[lbs]	[lbs]	[lbs]	11%	0.51	2404	0	123.30	A	24044	1265	MST72	5660
3	8.5	10				5%	1.18	1048	0	123.30	A	10481	1310	MST72	5660
4	5	10				3%	2.00	617	0	123.30	A	6165	1370	MST72	5660
5	5	10				3%	2.00	617	0	123.30	A	6165	1370	MST72	5660
6	10	10				6%	1.00	1233	0	123.30	A	12330	1298	MST72	5660
7	8	10				4%	1.25	986	0	123.30	A	9864	1315	MST72	5660
8	5.5	10				3%	1.82	678	0	123.30	A	6782	1356	MST72	5660
9	23.5	10				13%	0.43	2898	0	123.30	A	28976	1260	MST72	5660
10	17.5	10				10%	0.57	2158	0	123.30	A	21578	1269	MST72	5660
11	11	10				6%	0.91	1356	0	123.30	A	13563	1292	MST72	5660
12	13	10				7%	0.77	1603	0	123.30	A	16029	1282	MST72	5660
13	21.5	10				12%	0.47	2651	0	123.30	A	26510	1262	MST72	5660
14	25.5	10				14%	0.39	3144	0	123.30	A	31442	1258	MST72	5660

SHEAR DISTRIBUTION FOR 2ND FLOOR - SHEAR LINE EW-A1

WALL No.	Lw (ft)	Hw (ft)	Story Force Per Floor	Story Shear Per Line	Story Shear Cumulative	Distribution Factor	Aspect Ratio H/L	V (pounds)	Add'l Shear	(V/L)	Wall Type	OT (pound-ft)	ASD Uplift (pounds)	Simpson ATS Rod Model	Simpson ATS Capacity
1	7.5	10	99447	19892	42209	4%	1.33	824	925	233.20	A	26738	3820	HDU8	5227
2	19.5	10	[lbs]	[lbs]	[lbs]	11%	0.51	2143	2404	233.20	A	69518	3659	HDU8	5227
3	8.5	10				5%	1.18	934	1048	233.20	A	30303	3788	HDU8	5227
4	5	10				3%	2.00	549	617	233.20	A	17825	3960	HDU8	5227
5	5	10				3%	2.00	549	617	233.20	A	17825	3960	HDU8	5227
6	10	10				6%	1.00	1099	1233	233.20	A	35650	3752	HDU8	5227
7	8	10				4%	1.25	879	986	233.20	A	28520	3802	HDU8	5227
8	5.5	10				3%	1.82	604	678	233.20	A	19608	3920	HDU8	5227
9	23.5	10				13%	0.43	2583	2898	233.20	A	83778	3642	HDU8	5227
10	17.5	10				10%	0.57	1923	2158	233.20	A	62388	3669	HDU8	5227
11	11	10				6%	0.91	1209	1356	233.20	A	39215	3734	HDU8	5227
12	13	10				7%	0.77	1429	1603	233.20	A	46345	3707	HDU8	5227
13	21.5	10				12%	0.47	2363	2651	233.20	A	76648	3649	HDU8	5227
14	25.5	10				14%	0.39	2802	3144	233.20	A	90908	3636	HDU8	5227

SHEATHED SHEAR WALL DEFLECTION

(Per Sec. 2305.3.2 of 2016 CBC - Deflection)
(NDS - SDPWS - 15th Edition - 4.3.2 Deflection)

$\Delta = 8\ v\ h^3 / E\ A\ b + v\ h / 1000\ Ga + d_a\ h / b$

$\Delta_{allow} = 0.02\ h$ **$C_d = 4$**

LEVEL	STORY HEIGHT [ft]	Δ_a [in]
Roof	10	2.400
2nd Floor	10	2.400
First Floor (Base)	-	-

b =	See Below	ft	(Length of wall in ft)
h =	See Above	ft	(Heigth of wall in ft)
v =	See Below	plf	(Maximum shear at top in plf)
d_a =	See Below	in	(Vertical elongation of holdown)
E =	1700000	psi	(Elastic Modulus of boundary elements)
Ga =	See Below	lb/in	(Panel rigidity through thickness lb/in of panel width or depth Table 2305.2.2)
t =	0.469	in	(Sheathing thickness)
A =	See Below	in^2	(Area of boundary element cross section)

SHEAR WALL DEFLECTION AT EW-A1

SHEAR LINE	WALL ID	b (ft)	v (plf)	End Post	A (in^2)	$8vh^3$ / EAb	Wall Type	Ga	v h / 1000 Ga	d_a	d_a h / b	Δ (in)	Δ_m (in)	Δ_{allow} (in)	Check
EW-A1 - Roof	1	7.5	123	4 x 4	12	0.006	A	13.000	0.095	0.125	0.1667	0.268	1.071317	2.400	OK
EW-A1 - Roof	2	19.5	123	4 x 4	12	0.002	A	13.000	0.095	0.125	0.0641	0.161	0.645515	2.400	OK
EW-A1 - Roof	3	8.5	123	4 x 4	12	0.006	A	13.000	0.095	0.125	0.1471	0.247	0.989914	2.400	OK
EW-A1 - Roof	4	5	123	4 x 4	12	0.009	A	13.000	0.095	0.125	0.2500	0.354	1.417281	2.400	OK
EW-A1 - Roof	5	5	123	4 x 4	12	0.009	A	13.000	0.095	0.125	0.2500	0.354	1.417281	2.400	OK
EW-A1 - Roof	6	10	123	4 x 4	12	0.005	A	13.000	0.095	0.125	0.1250	0.225	0.898335	2.400	OK
EW-A1 - Roof	7	8	123	4 x 4	12	0.006	A	13.000	0.095	0.125	0.1563	0.257	1.028071	2.400	OK
EW-A1 - Roof	8	5.5	123	4 x 4	12	0.009	A	13.000	0.095	0.125	0.2273	0.331	1.322927	2.400	OK
EW-A1 - Roof	9	23.5	123	4 x 4	12	0.002	A	13.000	0.095	0.125	0.0532	0.150	0.600216	2.400	OK
EW-A1 - Roof	10	17.5	123	4 x 4	12	0.003	A	13.000	0.095	0.125	0.0714	0.169	0.675929	2.400	OK
EW-A1 - Roof	11	11	123	4 x 4	12	0.004	A	13.000	0.095	0.125	0.1136	0.213	0.851158	2.400	OK
EW-A1 - Roof	12	13	123	4 x 4	12	0.004	A	13.000	0.095	0.125	0.0962	0.195	0.778578	2.400	OK
EW-A1 - Roof	13	21.5	123	4 x 4	12	0.002	A	13.000	0.095	0.125	0.0581	0.155	0.620759	2.400	OK
EW-A1 - Roof	14	25.5	123	4 x 4	12	0.002	A	13.000	0.095	0.125	0.0490	0.146	0.582897	2.400	OK
EW-A1 - 2nd Floor	1	7.5	233	4 x 4	12	0.012	A	13.000	0.179	0.125	0.1667	0.358	1.431983	2.400	OK
EW-A1 - 2nd Floor	2	19.5	233	4 x 4	12	0.005	A	13.000	0.179	0.125	0.0641	0.248	0.992325	2.400	OK
EW-A1 - 2nd Floor	3	8.5	233	4 x 4	12	0.011	A	13.000	0.179	0.125	0.1471	0.337	1.347931	2.400	OK
EW-A1 - 2nd Floor	4	5	233	4 x 4	12	0.018	A	13.000	0.179	0.125	0.2500	0.447	1.789206	2.400	OK
EW-A1 - 2nd Floor	5	5	233	4 x 4	12	0.018	A	13.000	0.179	0.125	0.2500	0.447	1.789206	2.400	OK
EW-A1 - 2nd Floor	6	10	233	4 x 4	12	0.009	A	13.000	0.179	0.125	0.1250	0.313	1.253372	2.400	OK
EW-A1 - 2nd Floor	7	8	233	4 x 4	12	0.011	A	13.000	0.179	0.125	0.1563	0.347	1.387331	2.400	OK
EW-A1 - 2nd Floor	8	5.5	233	4 x 4	12	0.016	A	13.000	0.179	0.125	0.2273	0.423	1.691782	2.400	OK
EW-A1 - 2nd Floor	9	23.5	233	4 x 4	12	0.004	A	13.000	0.179	0.125	0.0532	0.236	0.945553	2.400	OK
EW-A1 - 2nd Floor	10	17.5	233	4 x 4	12	0.005	A	13.000	0.179	0.125	0.0714	0.256	1.023729	2.400	OK
EW-A1 - 2nd Floor	11	11	233	4 x 4	12	0.008	A	13.000	0.179	0.125	0.1136	0.301	1.20466	2.400	OK
EW-A1 - 2nd Floor	12	13	233	4 x 4	12	0.007	A	13.000	0.179	0.125	0.0962	0.282	1.129718	2.400	OK
EW-A1 - 2nd Floor	13	21.5	233	4 x 4	12	0.004	A	13.000	0.179	0.125	0.0581	0.242	0.966763	2.400	OK
EW-A1 - 2nd Floor	14	25.5	233	4 x 4	12	0.004	A	13.000	0.179	0.125	0.0490	0.232	0.927669	2.400	OK

DESIGN LATERAL FORCES ON SHEAR WALLS FOR E-W DIRECTION

SHEAR DISTRIBUTION FOR ROOF - SHEAR LINE EW-A2

WALL No.	Lw (ft)	Hw (ft)	Story Force Per Floor	Story Shear Per Line	Story Shear Cumulative	Distribution Factor	Aspect Ratio H/L	V (pounds)	Add'l Shear	(V/L)	Wall Type	OT (pound-ft)	ASD Uplift (pounds)	Simpson ATS Rod Model	Simpson ATS Capacity
1	7	10	111575	29484	29484	4%	1.43	1163	0	166.11	A	11628	1789	MST72	5660
2	18.5	10	[lbs]	[lbs]	[lbs]	10%	0.54	3073	0	166.11	A	30730	1707	MST72	5660
3	10	10				6%	1.00	1661	0	166.11	A	16611	1749	MST72	5660
4	24.5	10				14%	0.41	4070	0	166.11	A	40696	1696	MST72	5660
5	18	10				10%	0.56	2990	0	166.11	A	29899	1709	MST72	5660
6	25.5	10				14%	0.39	4236	0	166.11	A	42357	1694	MST72	5660
7	12	10				7%	0.83	1993	0	166.11	A	19933	1733	MST72	5660
8	6	10				3%	1.67	997	0	166.11	A	9966	1812	MST72	5660
9	4.5	10				3%	2.22	768	0	170.72	A	7682	1921	MST72	5660
10	8	10				5%	1.25	1329	0	166.11	A	13289	1772	MST72	5660
11	6	10				3%	1.67	997	0	166.11	A	9966	1812	MST72	5660
12	12	10				7%	0.83	1993	0	166.11	A	19933	1733	MST72	5660
13	25.5	10				14%	0.39	4236	0	166.11	A	42357	1694	MST72	5660

SHEAR DISTRIBUTION FOR 2ND FLOOR - SHEAR LINE EW-A2

WALL No.	Lw (ft)	Hw (ft)	Story Force Per Floor	Story Shear Per Line	Story Shear Cumulative	Distribution Factor	Aspect Ratio H/L	V (pounds)	Add'l Shear	(V/L)	Wall Type	OT (pound-ft)	ASD Uplift (pounds)	Simpson ATS Rod Model	Simpson ATS Capacity
1	7	10	99447	26279	55763	4%	1.43	989	1110	299.80	A	27182	3708	HDU11	8381
2	24.5	10	[lbs]	[lbs]	[lbs]	13%	0.41	3462	3884	299.80	A	112288	4053	HDU8	5227
3	12.5	10				7%	0.80	1766	1981	299.80	A	57290	4449	HDU8	5227
4	24.5	10				13%	0.41	3462	3884	299.80	A	112288	4053	HDU8	5227
5	18	10				10%	0.56	2543	2853	299.80	A	82498	4251	HDU8	5227
6	25.5	10				14%	0.39	3603	4042	299.80	A	116872	4025	HDU8	5227
7	12	10				6%	0.83	1695	1902	299.80	A	54998	4469	HDU8	5227
8	6	10				3%	1.67	848	951	299.80	A	27499	4433	HDU11	8381
9	4.5	10				2%	2.22	653	733	308.13	A	21197	4598	HDU11	8381
10	8	10				4%	1.25	1130	1268	299.80	A	36666	4675	HDU8	5227
11	6	10				3%	1.67	848	951	299.80	A	27499	4433	HDU11	8381
12	12	10				6%	0.83	1695	1902	299.80	A	54998	4469	HDU8	5227
13	25.5	10				14%	0.39	3603	4042	299.80	A	116872	4025	HDU8	5227

SHEATHED SHEAR WALL DEFLECTION

(Per Sec. 2305.3.2 of 2016 CBC - Deflection)
(NDS - SDPWS - 15th Edition - 4.3.2 Deflection)

$\Delta = 8\ v\ h^3 / E\ A\ b + v\ h / 1000\ Ga + d_a\ h / b$

$\Delta_{allow} = 0.02\ h$ **$C_d = 4$**

LEVEL	STORY HEIGHT [ft]	Δ_a [in]
Roof	10	2.400
2nd Floor	10	2.400
First Floor (Base)	-	-

b =	See Below	ft	(Length of wall in ft)
h =	See Above	ft	(Heigth of wall in ft)
v =	See Below	plf	(Maximum shear at top in plf)
d_a =	See Below	in	(Vertical elongation of holdown)
E =	1700000	psi	(Elastic Modulus of boundary elements)
Ga =	See Below	lb/in	(Panel rigidity through thickness lb/in of panel width or depth Table 2305.2.2)
t =	0.469	in	(Sheathing thickness)
A =	See Below	in^2	(Area of boundary element cross section)

SHEAR WALL DEFLECTION AT EW-A2

SHEAR LINE	WALL ID	b (ft)	v (plf)	End Post	A (in^2)	$8vh^3$ / EAb	Wall Type	Ga	v h / 1000 Ga	d_a	d_a h / b	Δ (in)	Δ_m (in)	Δ_{allow} (in)	Check
EW-A2 - Roof	**1**	**7**	166	4 x 4	12	0.009	A	13.000	0.128	0.125	0.1786	0.315	1.261849	2.400	**OK**
EW-A2 - Roof	**2**	**18.5**	166	4 x 4	12	0.003	A	13.000	0.128	0.125	0.0676	0.199	0.795167	2.400	**OK**
EW-A2 - Roof	**3**	**10**	166	4 x 4	12	0.006	A	13.000	0.128	0.125	0.1250	0.259	1.036625	2.400	**OK**
EW-A2 - Roof	**4**	**24.5**	166	4 x 4	12	0.003	A	13.000	0.128	0.125	0.0510	0.181	0.7256	2.400	**OK**
EW-A2 - Roof	**5**	**18**	166	4 x 4	12	0.004	A	13.000	0.128	0.125	0.0694	0.201	0.803058	2.400	**OK**
EW-A2 - Roof	**6**	**25.5**	166	4 x 4	12	0.003	A	13.000	0.128	0.125	0.0490	0.179	0.717188	2.400	**OK**
EW-A2 - Roof	**7**	**12**	166	4 x 4	12	0.005	A	13.000	0.128	0.125	0.1042	0.237	0.949037	2.400	**OK**
EW-A2 - Roof	**8**	**6**	166	4 x 4	12	0.011	A	13.000	0.128	0.125	0.2083	0.347	1.386974	2.400	**OK**
EW-A2 - Roof	**9**	**4.5**	171	4 x 4	12	0.015	A	13.000	0.131	0.125	0.2778	0.424	1.694705	2.400	**OK**
EW-A2 - Roof	**10**	**8**	166	4 x 4	12	0.008	A	13.000	0.128	0.125	0.1563	0.292	1.168006	2.400	**OK**
EW-A2 - Roof	**11**	**6**	166	4 x 4	12	0.011	A	13.000	0.128	0.125	0.2083	0.347	1.386974	2.400	**OK**
EW-A2 - Roof	**12**	**12**	166	4 x 4	12	0.005	A	13.000	0.128	0.125	0.1042	0.237	0.949037	2.400	**OK**
EW-A2 - Roof	**13**	**25.5**	166	4 x 4	12	0.003	A	13.000	0.128	0.125	0.0490	0.179	0.717188	2.400	**OK**
EW-A2 - 2nd Floor	**1**	**7**	300	4 x 4	12	0.016	A	13.000	0.231	0.125	0.1786	0.426	1.702569	2.400	**OK**
EW-A2 - 2nd Floor	**2**	**24.5**	300	4 x 4	12	0.005	A	13.000	0.231	0.125	0.0510	0.286	1.145356	2.400	**OK**
EW-A2 - 2nd Floor	**3**	**12.5**	300	4 x 4	12	0.009	A	13.000	0.231	0.125	0.1000	0.340	1.359326	2.400	**OK**
EW-A2 - 2nd Floor	**4**	**24.5**	300	4 x 4	12	0.005	A	13.000	0.231	0.125	0.0510	0.286	1.145356	2.400	**OK**
EW-A2 - 2nd Floor	**5**	**18**	300	4 x 4	12	0.006	A	13.000	0.231	0.125	0.0694	0.306	1.225843	2.400	**OK**
EW-A2 - 2nd Floor	**6**	**25.5**	300	4 x 4	12	0.005	A	13.000	0.231	0.125	0.0490	0.284	1.136616	2.400	**OK**
EW-A2 - 2nd Floor	**7**	**12**	300	4 x 4	12	0.010	A	13.000	0.231	0.125	0.1042	0.344	1.377528	2.400	**OK**
EW-A2 - 2nd Floor	**8**	**6**	300	4 x 4	12	0.019	A	13.000	0.231	0.125	0.2083	0.458	1.832585	2.400	**OK**
EW-A2 - 2nd Floor	**9**	**4.5**	308	4 x 4	12	0.026	A	13.000	0.237	0.125	0.2778	0.541	2.164424	2.400	**OK**
EW-A2 - 2nd Floor	**10**	**8**	300	4 x 4	12	0.014	A	13.000	0.231	0.125	0.1563	0.401	1.605057	2.400	**OK**
EW-A2 - 2nd Floor	**11**	**6**	300	4 x 4	12	0.019	A	13.000	0.231	0.125	0.2083	0.458	1.832585	2.400	**OK**
EW-A2 - 2nd Floor	**12**	**12**	300	4 x 4	12	0.010	A	13.000	0.231	0.125	0.1042	0.344	1.377528	2.400	**OK**
EW-A2 - 2nd Floor	**13**	**25.5**	300	4 x 4	12	0.005	A	13.000	0.231	0.125	0.0490	0.284	1.136616	2.400	**OK**

DESIGN LATERAL FORCES ON SHEAR WALLS FOR E-W DIRECTION

SHEAR DISTRIBUTION FOR ROOF - SHEAR LINE EW-A3

WALL No.	Lw (ft)	Hw (ft)	Story Force Per Floor	Story Shear Per Line	Story Shear Cumulative	Distribution Factor	Aspect Ratio H/L	V (pounds)	Add'l Shear	(V/L)	Wall Type	OT (pound-ft)	ASD Uplift (pounds)	Simpson ATS Rod Model	Simpson ATS Capacity
1	23.5	10	111575	4608	4608	55%	0.43	2548	0	108.41	A	25477	1108	MST72	5660
2	19	10	[lbs]	[lbs]	[lbs]	45%	0.53	2060	0	108.41	A	20599	1113	MST72	5660

SHEAR DISTRIBUTION FOR 2ND FLOOR - SHEAR LINE EW-A3

WALL No.	Lw (ft)	Hw (ft)	Story Force Per Floor	Story Shear Per Line	Story Shear Cumulative	Distribution Factor	Aspect Ratio H/L	V (pounds)	Add'l Shear	(V/L)	Wall Type	OT (pound-ft)	ASD Uplift (pounds)	Simpson ATS Rod Model	Simpson ATS Capacity
1	23.5	10	99447	4107	8714	55%	0.43	2271	2548	205.05	A	73663	3203	HDU8	5227
2	19	10	[lbs]	[lbs]	[lbs]	45%	0.53	1836	2060	205.05	A	59557	3219	HDU8	5227

SHEATHED SHEAR WALL DEFLECTION

(Per Sec. 2305.3.2 of 2016 CBC - Deflection)
(NDS - SDPWS - 15th Edition - 4.3.2 Deflection)

$\Delta = 8\ v\ h^3 / E\ A\ b + v\ h / 1000\ Ga + d_a\ h / b$

$\Delta_{allow} = 0.02\ h$ **$C_d = 4$**

LEVEL	STORY HEIGHT [ft]	Δ_a [in]
Roof	10	2.400
2nd Floor	10	2.400
First Floor (Base)	-	-

b =	See Below	ft	(Length of wall in ft)
h =	See Above	ft	(Heigth of wall in ft)
v =	See Below	plf	(Maximum shear at top in plf)
d_a =	See Below	in	(Vertical elongation of holdown)
E =	1700000	psi	(Elastic Modulus of boundary elements)
Ga =	See Below	lb/in	(Panel rigidity through thickness lb/in of panel width or depth Table 2305.2.2)
t =	0.469	in	(Sheathing thickness)
A =	See Below	in^2	(Area of boundary element cross section)

SHEAR WALL DEFLECTION AT EW-A3

SHEAR LINE	WALL ID	b (ft)	v (plf)	End Post	A (in^2)	$8vh^3$ / EAb	Wall Type	Ga	v h / 1000 Ga	d_a	d_a h / b	Δ (in)	Δ_m (in)	Δ_{allow} (in)	Check
EW-A3 - Roof	**1**	**23.5**	108	4 x 4	12	0.002	A	13.000	0.083	0.125	0.0532	0.138	0.553439	2.400	**OK**
EW-A3 - Roof	**2**	**19**	108	4 x 4	12	0.002	A	13.000	0.083	0.125	0.0658	0.151	0.60551	2.400	**OK**
EW-A3 - 2nd Floor	**1**	**23.5**	205	4 x 4	12	0.003	A	13.000	0.158	0.125	0.0532	0.214	0.857082	2.400	**OK**
EW-A3 - 2nd Floor	**2**	**19**	205	4 x 4	12	0.004	A	13.000	0.158	0.125	0.0658	0.228	0.910649	2.400	**OK**

DESIGN LATERAL FORCES ON SHEAR WALLS FOR E-W DIRECTION

SHEAR DISTRIBUTION FOR ROOF - SHEAR LINE EW-A4

WALL No.	Lw (ft)	Hw (ft)	Story Force Per Floor	Story Shear Per Line	Story Shear Cumulative	Distribution Factor	Aspect Ratio H/L	V (pounds)	Add'l Shear	(V/L)	Wall Type	OT (pound-ft)	ASD Uplift (pounds)	Simpson ATS Rod Model	Simpson ATS Capacity
1	19	10	111575	4608	4608	45%	0.53	2060	0	108.41	A	20599	1113	MST72	5660
2	23.5	10	[lbs]	[lbs]	[lbs]	55%	0.43	2548	0	108.41	A	25477	1108	MST72	5660

SHEAR DISTRIBUTION FOR 2ND FLOOR - SHEAR LINE EW-A4

WALL No.	Lw (ft)	Hw (ft)	Story Force Per Floor	Story Shear Per Line	Story Shear Cumulative	Distribution Factor	Aspect Ratio H/L	V (pounds)	Add'l Shear	(V/L)	Wall Type	OT (pound-ft)	ASD Uplift (pounds)	Simpson ATS Rod Model	Simpson ATS Capacity
1	19	10	99447	4107	8714	45%	0.53	1836	2060	205.05	A	59557	3219	HDU8	5227
2	23.5	10	[lbs]	[lbs]	[lbs]	55%	0.43	2271	2548	205.05	A	73663	3203	HDU8	5227

SHEATHED SHEAR WALL DEFLECTION

(Per Sec. 2305.3.2 of 2016 CBC - Deflection)
(NDS - SDPWS - 15th Edition - 4.3.2 Deflection)

$\Delta = 8\ v\ h^3 / E\ A\ b + v\ h / 1000\ Ga + d_a\ h / b$

$\Delta_{allow} = 0.02\ h$ **$C_d = 4$**

LEVEL	STORY HEIGHT [ft]	Δ_a [in]
Roof	10	2.400
2nd Floor	10	2.400
First Floor (Base)	-	-

b =	See Below	ft	(Length of wall in ft)
h =	See Above	ft	(Heigth of wall in ft)
v =	See Below	plf	(Maximum shear at top in plf)
d_a =	See Below	in	(Vertical elongation of holdown)
E =	1700000	psi	(Elastic Modulus of boundary elements)
Ga =	See Below	lb/in	(Panel rigidity through thickness lb/in of panel width or depth Table 2305.2.2)
t =	0.469	in	(Sheathing thickness)
A =	See Below	in^2	(Area of boundary element cross section)

SHEAR WALL DEFLECTION AT EW-A4

SHEAR LINE	WALL ID	b (ft)	v (plf)	End Post	A (in^2)	$8vh^3$ / EAb	Wall Type	Ga	v h / 1000 Ga	d_a	d_a h / b	Δ (in)	Δ_m (in)	Δ_{allow} (in)	Check
EW-A4 - Roof	**1**	**19**	108	4 x 4	12	0.002	A	13.000	0.083	0.125	0.0658	0.151	0.60551	2.400	**OK**
EW-A4 - Roof	**2**	**23.5**	108	4 x 4	12	0.002	A	13.000	0.083	0.125	0.0532	0.138	0.553439	2.400	**OK**
EW-A4 - 2nd Floor	**1**	**19**	205	4 x 4	12	0.004	A	13.000	0.158	0.125	0.0658	0.228	0.910649	2.400	**OK**
EW-A4 - 2nd Floor	**2**	**23.5**	205	4 x 4	12	0.003	A	13.000	0.158	0.125	0.0532	0.214	0.857082	2.400	**OK**

DESIGN LATERAL FORCES ON SHEAR WALLS FOR E-W DIRECTION

SHEAR DISTRIBUTION FOR ROOF - SHEAR LINE EW-A5

WALL No.	Lw (ft)	Hw (ft)	Story Force Per Floor	Story Shear Per Line	Story Shear Cumulative	Distribution Factor	Aspect Ratio H/L	V (pounds)	Add'l Shear	(V/L)	Wall Type	OT (pound-ft)	ASD Uplift (pounds)	Simpson ATS Rod Model	Simpson ATS Capacity
1	25.5	10	111575	28965	28965	14%	0.39	3950	0	154.89	A	39498	1580	MST72	5660
2	12	10	[lbs]	[lbs]	[lbs]	6%	0.83	1859	0	154.89	A	18587	1616	MST72	5660
3	8.25	10				4%	1.21	1278	0	154.89	A	12779	1649	MST72	5660
4	7	10				4%	1.43	1084	0	154.89	A	10842	1668	MST72	5660
5	7	10				4%	1.43	1084	0	154.89	A	10842	1668	MST72	5660
6	4.5	10				2%	2.22	716	0	159.20	A	7164	1791	MST72	5660
7	7	10				4%	1.43	1084	0	154.89	A	10842	1668	MST72	5660
8	8.25	10				4%	1.21	1278	0	154.89	A	12779	1649	MST72	5660
9	12	10				6%	0.83	1859	0	154.89	A	18587	1616	MST72	5660
10	25.5	10				14%	0.39	3950	0	154.89	A	39498	1580	MST72	5660
11	18	10				10%	0.56	2788	0	154.89	A	27881	1593	MST72	5660
12	19	10				10%	0.53	2943	0	154.89	A	29430	1591	MST72	5660
13	10	10				5%	1.00	1549	0	154.89	A	15489	1630	MST72	5660
14	16	10				9%	0.63	2478	0	154.89	A	24783	1599	MST72	5660
15	7	10				4%	1.43	1084	0	154.89	A	10842	1668	MST72	5660

SHEAR DISTRIBUTION FOR 2ND FLOOR - SHEAR LINE EW-A5

WALL No.	Lw (ft)	Hw (ft)	Story Force Per Floor	Story Shear Per Line	Story Shear Cumulative	Distribution Factor	Aspect Ratio H/L	V (pounds)	Add'l Shear	(V/L)	Wall Type	OT (pound-ft)	ASD Uplift (pounds)	Simpson ATS Rod Model	Simpson ATS Capacity
1	26	10	99447	25817	54781	13%	0.38	3425	3842	279.50	A	111092	4357	HDU8	5227
2	12	10	[lbs]	[lbs]	[lbs]	6%	0.83	1581	1773	279.50	A	51273	4458	HDU8	5227
3	8.25	10				4%	1.21	1087	1219	279.50	A	35250	4548	HDU8	5227
4	7	10				4%	1.43	922	1034	279.50	A	29909	4601	HDU8	5227
5	7	10				4%	1.43	922	1034	279.50	A	29909	4601	HDU8	5227
6	4.5	10				2%	2.22	609	683	287.26	A	19762	4939	HDU11	8381
7	7	10				4%	1.43	922	1034	279.50	A	29909	4601	HDU8	5227
8	8.25	10				4%	1.21	1087	1219	279.50	A	35250	4548	HDU8	5227
9	12	10				6%	0.83	1581	1773	279.50	A	51273	4458	HDU8	5227
10	25.5	10				13%	0.39	3359	3768	279.50	A	108956	4358	HDU8	5227
11	18	10				9%	0.56	2371	2660	279.50	A	76910	4394	HDU8	5227
12	25	10				13%	0.40	3293	3695	279.50	A	106819	4360	HDU8	5227
13	12	10				6%	0.83	1581	1773	279.50	A	51273	4458	HDU8	5227
14	16.5	10				8%	0.61	2173	2438	279.50	A	70501	4405	HDU8	5227
15	7	10				4%	1.43	922	1034	279.50	A	29909	4599	HDU8	5227

SHEATHED SHEAR WALL DEFLECTION

(Per Sec. 2305.3.2 of 2016 CBC - Deflection)
(NDS - SDPWS - 15th Edition - 4.3.2 Deflection)

$\Delta = 8\ v\ h^3 / E\ A\ b + v\ h / 1000\ Ga + d_a\ h / b$

$\Delta_{allow} = 0.02\ h$ **$C_d = 4$**

LEVEL	STORY HEIGHT [ft]	Δ_a [in]
Roof	10	2.400
2nd Floor	10	2.400
First Floor (Base)	-	-

b =	See Below	ft	(Length of wall in ft)
h =	See Above	ft	(Heigth of wall in ft)
v =	See Below	plf	(Maximum shear at top in plf)
d_a =	See Below	in	(Vertical elongation of holdown)
E =	1700000	psi	(Elastic Modulus of boundary elements)
Ga =	See Below	lb/in	(Panel rigidity through thickness lb/in of panel width or depth Table 2305.2.2)
t =	0.469	in	(Sheathing thickness)
A =	See Below	in^2	(Area of boundary element cross section)

SHEAR WALL DEFLECTION AT EW-A5

SHEAR LINE	WALL ID	b (ft)	v (plf)	End Post	A (in^2)	$8vh^3$ / EAb	Wall Type	Ga	v h / 1000 Ga	d_a	d_a h / b	Δ (in)	Δ_m (in)	Δ_{allow} (in)	Check
EW-A5 - Roof	1	25.5	155	4 x 4	12	0.002	A	13.000	0.119	0.125	0.0490	0.171	0.682005	2.400	OK
EW-A5 - Roof	2	12	155	4 x 4	12	0.005	A	13.000	0.119	0.125	0.1042	0.228	0.913093	2.400	OK
EW-A5 - Roof	3	8.25	155	4 x 4	12	0.007	A	13.000	0.119	0.125	0.1515	0.278	1.111503	2.400	OK
EW-A5 - Roof	4	7	155	4 x 4	12	0.009	A	13.000	0.119	0.125	0.1786	0.306	1.22488	2.400	OK
EW-A5 - Roof	5	7	155	4 x 4	12	0.009	A	13.000	0.119	0.125	0.1786	0.306	1.22488	2.400	OK
EW-A5 - Roof	6	4.5	159	4 x 4	12	0.014	A	13.000	0.122	0.125	0.2778	0.414	1.655303	2.400	OK
EW-A5 - Roof	7	7	155	4 x 4	12	0.009	A	13.000	0.119	0.125	0.1786	0.306	1.22488	2.400	OK
EW-A5 - Roof	8	8.25	155	4 x 4	12	0.007	A	13.000	0.119	0.125	0.1515	0.278	1.111503	2.400	OK
EW-A5 - Roof	9	12	155	4 x 4	12	0.005	A	13.000	0.119	0.125	0.1042	0.228	0.913093	2.400	OK
EW-A5 - Roof	10	25.5	155	4 x 4	12	0.002	A	13.000	0.119	0.125	0.0490	0.171	0.682005	2.400	OK
EW-A5 - Roof	11	18	155	4 x 4	12	0.003	A	13.000	0.119	0.125	0.0694	0.192	0.767593	2.400	OK
EW-A5 - Roof	12	19	155	4 x 4	12	0.003	A	13.000	0.119	0.125	0.0658	0.188	0.752277	2.400	OK
EW-A5 - Roof	13	10	155	4 x 4	12	0.006	A	13.000	0.119	0.125	0.1250	0.250	1.000394	2.400	OK
EW-A5 - Roof	14	16	155	4 x 4	12	0.004	A	13.000	0.119	0.125	0.0781	0.201	0.803968	2.400	OK
EW-A5 - Roof	15	7	155	4 x 4	12	0.009	A	13.000	0.119	0.125	0.1786	0.306	1.22488	2.400	OK
EW-A5 - 2nd Floor	1	26	279	4 x 4	12	0.004	A	13.000	0.215	0.125	0.0481	0.267	1.068818	2.400	OK
EW-A5 - 2nd Floor	2	12	279	4 x 4	12	0.009	A	13.000	0.215	0.125	0.1042	0.328	1.312448	2.400	OK
EW-A5 - 2nd Floor	3	8.25	279	4 x 4	12	0.013	A	13.000	0.215	0.125	0.1515	0.380	1.51811	2.400	OK
EW-A5 - 2nd Floor	4	7	279	4 x 4	12	0.015	A	13.000	0.215	0.125	0.1786	0.409	1.635631	2.400	OK
EW-A5 - 2nd Floor	5	7	279	4 x 4	12	0.015	A	13.000	0.215	0.125	0.1786	0.409	1.635631	2.400	OK
EW-A5 - 2nd Floor	6	4.5	287	4 x 4	12	0.025	A	13.000	0.221	0.125	0.2778	0.523	2.093082	2.400	OK
EW-A5 - 2nd Floor	7	7	279	4 x 4	12	0.015	A	13.000	0.215	0.125	0.1786	0.409	1.635631	2.400	OK
EW-A5 - 2nd Floor	8	8.25	279	4 x 4	12	0.013	A	13.000	0.215	0.125	0.1515	0.380	1.51811	2.400	OK
EW-A5 - 2nd Floor	9	12	279	4 x 4	12	0.009	A	13.000	0.215	0.125	0.1042	0.328	1.312448	2.400	OK
EW-A5 - 2nd Floor	10	25.5	279	4 x 4	12	0.004	A	13.000	0.215	0.125	0.0490	0.268	1.072912	2.400	OK
EW-A5 - 2nd Floor	11	18	279	4 x 4	12	0.006	A	13.000	0.215	0.125	0.0694	0.290	1.161629	2.400	OK
EW-A5 - 2nd Floor	12	25	279	4 x 4	12	0.004	A	13.000	0.215	0.125	0.0500	0.269	1.077171	2.400	OK
EW-A5 - 2nd Floor	13	12	279	4 x 4	12	0.009	A	13.000	0.215	0.125	0.1042	0.328	1.312448	2.400	OK
EW-A5 - 2nd Floor	14	16.5	279	4 x 4	12	0.007	A	13.000	0.215	0.125	0.0758	0.297	1.189051	2.400	OK
EW-A5 - 2nd Floor	15	7	279	4 x 4	12	0.015	A	13.000	0.215	0.125	0.1786	0.409	1.635631	2.400	OK

DESIGN LATERAL FORCES ON SHEAR WALLS FOR E-W DIRECTION

SHEAR DISTRIBUTION FOR ROOF - SHEAR LINE EW-A6

WALL No.	Lw (ft)	Hw (ft)	Story Force Per Floor	Story Shear Per Line	Story Shear Cumulative	Distribution Factor	Aspect Ratio H/L	V (pounds)	Add'l Shear	(V/L)	Wall Type	OT (pound-ft)	ASD Uplift (pounds)	Simpson ATS Rod Model	Simpson ATS Capacity
1	26	10	111575	21593	21593	13%	0.38	2786	0	107.16	A	27862	1093	MST72	5660
2	31	10	[lbs]	[lbs]	[lbs]	15%	0.32	3322	0	107.16	A	33220	1089	MST72	5660
3	20	10				10%	0.50	2143	0	107.16	A	21432	1099	MST72	5660
4	30.5	10				15%	0.33	3268	0	107.16	A	32684	1089	MST72	5660
5	30.5	10				15%	0.33	3268	0	107.16	A	32684	1089	MST72	5660
6	5.5	10				3%	1.82	589	0	107.16	A	5894	1179	MST72	5660
7	9	10				4%	1.11	964	0	107.16	A	9644	1135	MST72	5660
8	6.5	10				3%	1.54	697	0	107.16	A	6965	1161	MST72	5660
9	9	10				4%	1.11	964	0	107.16	A	9644	1135	MST72	5660
10	4	10				2%	2.50	455	0	113.86	A	4554	1301	MST72	5660
11	7	10				3%	1.43	750	0	107.16	A	7501	1154	MST72	5660
12	17.5	10				9%	0.57	1875	0	107.16	A	18753	1103	MST72	5660
13	5	10				2%	2.00	536	0	107.16	A	5358	1191	MST72	5660

SHEAR DISTRIBUTION FOR 2ND FLOOR - SHEAR LINE EW-A6

WALL No.	Lw (ft)	Hw (ft)	Story Force Per Floor	Story Shear Per Line	Story Shear Cumulative	Distribution Factor	Aspect Ratio H/L	V (pounds)	Add'l Shear	(V/L)	Wall Type	OT (pound-ft)	ASD Uplift (pounds)	Simpson ATS Rod Model	Simpson ATS Capacity
1	26	10	99447	19246	40839	13%	0.38	2483	2786	202.67	A	80557	3159	HDU8	5227
2	31	10	[lbs]	[lbs]	[lbs]	15%	0.32	2961	3322	202.67	A	96049	3149	HDU8	5227
3	20	10				10%	0.50	1910	2143	202.67	A	61967	3178	HDU8	5227
4	30.5	10				15%	0.33	2913	3268	202.67	A	94500	3150	HDU8	5227
5	30.5	10				15%	0.33	2913	3268	202.67	A	94500	3150	HDU8	5227
6	5.5	10				3%	1.82	525	589	202.67	A	17041	3408	HDU8	5227
7	9	10				4%	1.11	860	964	202.67	A	27885	3281	HDU8	5227
8	6.5	10				3%	1.54	621	697	202.67	A	20139	3357	HDU8	5227
9	9	10				4%	1.11	860	964	202.67	A	27885	3281	HDU8	5227
10	4	10				2%	2.50	406	455	215.34	A	13168	3762	HDU8	5227
11	7	10				3%	1.43	669	750	202.67	A	21688	3337	HDU8	5227
12	17.5	10				9%	0.57	1671	1875	202.67	A	54221	3189	HDU8	5227
13	5	10				2%	2.00	478	536	202.67	A	15492	3443	HDU8	5227

SHEATHED SHEAR WALL DEFLECTION

(Per Sec. 2305.3.2 of 2016 CBC - Deflection)
(NDS - SDPWS - 15th Edition - 4.3.2 Deflection)

$\Delta = 8\ v\ h^3 / E\ A\ b + v\ h / 1000\ Ga + d_a\ h / b$

$\Delta_{allow} = 0.02\ h$ **$C_d = 4$**

LEVEL	STORY HEIGHT [ft]	Δ_a [in]
Roof	10	2.400
2nd Floor	10	2.400
First Floor (Base)	-	-

b =	See Below	ft	(Length of wall in ft)
h =	See Above	ft	(Heigth of wall in ft)
v =	See Below	plf	(Maximum shear at top in plf)
d_a =	See Below	in	(Vertical elongation of holdown)
E =	1700000	psi	(Elastic Modulus of boundary elements)
Ga =	See Below	lb/in	(Panel rigidity through thickness lb/in of panel width or depth Table 2305.2.2)
t =	0.469	in	(Sheathing thickness)
A =	See Below	in^2	(Area of boundary element cross section)

SHEAR WALL DEFLECTION AT EW-A6

SHEAR LINE	WALL ID	b (ft)	v (plf)	End Post	A (in^2)	$8vh^3$ / EAb	Wall Type	Ga	v h / 1000 Ga	d_a	d_a h / b	Δ (in)	Δ_m (in)	Δ_{allow} (in)	Check
EW-A6 - Roof	**1**	**26**	107	4 x 4	12	0.002	A	13.000	0.082	0.125	0.0481	0.132	0.528367	2.400	**OK**
EW-A5 - Roof	**2**	**31**	107	4 x 4	12	0.001	A	13.000	0.082	0.125	0.0403	0.124	0.496328	2.400	**OK**
EW-A5 - Roof	**3**	**20**	107	4 x 4	12	0.002	A	13.000	0.082	0.125	0.0625	0.147	0.587959	2.400	**OK**
EW-A5 - Roof	**4**	**30.5**	107	4 x 4	12	0.001	A	13.000	0.082	0.125	0.0410	0.125	0.499059	2.400	**OK**
EW-A5 - Roof	**5**	**30.5**	107	4 x 4	12	0.001	A	13.000	0.082	0.125	0.0410	0.125	0.499059	2.400	**OK**
EW-A5 - Roof	**6**	**5.5**	107	4 x 4	12	0.007	A	13.000	0.082	0.125	0.2273	0.317	1.268756	2.400	**OK**
EW-A5 - Roof	**7**	**9**	107	4 x 4	12	0.005	A	13.000	0.082	0.125	0.1389	0.226	0.903577	2.400	**OK**
EW-A5 - Roof	**8**	**6.5**	107	4 x 4	12	0.006	A	13.000	0.082	0.125	0.1923	0.281	1.12429	2.400	**OK**
EW-A5 - Roof	**9**	**9**	107	4 x 4	12	0.005	A	13.000	0.082	0.125	0.1389	0.226	0.903577	2.400	**OK**
EW-A5 - Roof	**10**	**4**	114	4 x 4	12	0.011	A	13.000	0.088	0.125	0.3125	0.411	1.644073	2.400	**OK**
EW-A5 - Roof	**11**	**7**	107	4 x 4	12	0.006	A	13.000	0.082	0.125	0.1786	0.267	1.067535	2.400	**OK**
EW-A5 - Roof	**12**	**17.5**	107	4 x 4	12	0.002	A	13.000	0.082	0.125	0.0714	0.156	0.624849	2.400	**OK**
EW-A5 - Roof	**13**	**5**	107	4 x 4	12	0.008	A	13.000	0.082	0.125	0.2500	0.341	1.362659	2.400	**OK**
EW-A6 - 2nd Floor	**1**	**26**	203	4 x 4	12	0.003	A	13.000	0.156	0.125	0.0481	0.207	0.827898	2.400	**OK**
EW-A5 - 2nd Floor	**2**	**31**	203	4 x 4	12	0.003	A	13.000	0.156	0.125	0.0403	0.199	0.794948	2.400	**OK**
EW-A5 - 2nd Floor	**3**	**20**	203	4 x 4	12	0.004	A	13.000	0.156	0.125	0.0625	0.222	0.889183	2.400	**OK**
EW-A5 - 2nd Floor	**4**	**30.5**	203	4 x 4	12	0.003	A	13.000	0.156	0.125	0.0410	0.199	0.797757	2.400	**OK**
EW-A5 - 2nd Floor	**5**	**30.5**	203	4 x 4	12	0.003	A	13.000	0.156	0.125	0.0410	0.199	0.797757	2.400	**OK**
EW-A5 - 2nd Floor	**6**	**5.5**	203	4 x 4	12	0.014	A	13.000	0.156	0.125	0.2273	0.397	1.589327	2.400	**OK**
EW-A5 - 2nd Floor	**7**	**9**	203	4 x 4	12	0.009	A	13.000	0.156	0.125	0.1389	0.303	1.213771	2.400	**OK**
EW-A5 - 2nd Floor	**8**	**6.5**	203	4 x 4	12	0.012	A	13.000	0.156	0.125	0.1923	0.360	1.440755	2.400	**OK**
EW-A5 - 2nd Floor	**9**	**9**	203	4 x 4	12	0.009	A	13.000	0.156	0.125	0.1389	0.303	1.213771	2.400	**OK**
EW-A5 - 2nd Floor	**10**	**4**	215	4 x 4	12	0.021	A	13.000	0.166	0.125	0.3125	0.499	1.995311	2.400	**OK**
EW-A5 - 2nd Floor	**11**	**7**	203	4 x 4	12	0.011	A	13.000	0.156	0.125	0.1786	0.346	1.382388	2.400	**OK**
EW-A5 - 2nd Floor	**12**	**17.5**	203	4 x 4	12	0.004	A	13.000	0.156	0.125	0.0714	0.232	0.927122	2.400	**OK**
EW-A5 - 2nd Floor	**13**	**5**	203	4 x 4	12	0.016	A	13.000	0.156	0.125	0.2500	0.421	1.685898	2.400	**OK**

SUB-AREAS FOR NS DIRECTION

C23

NS DIRECTION SHEAR WALL
ROOF LEVEL

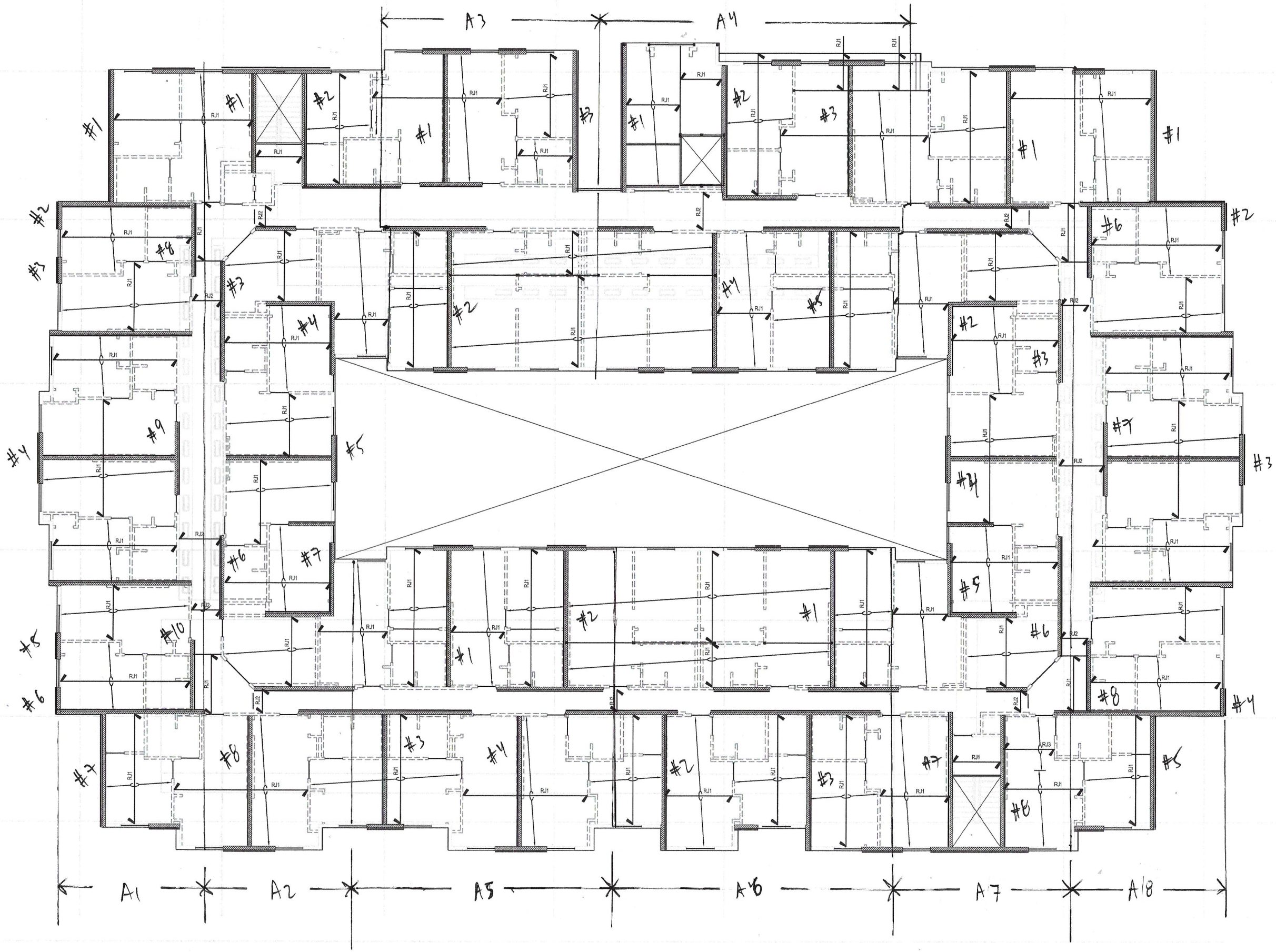

C24

NS DIRECTION SHEAR WALL
LEVEL THREE

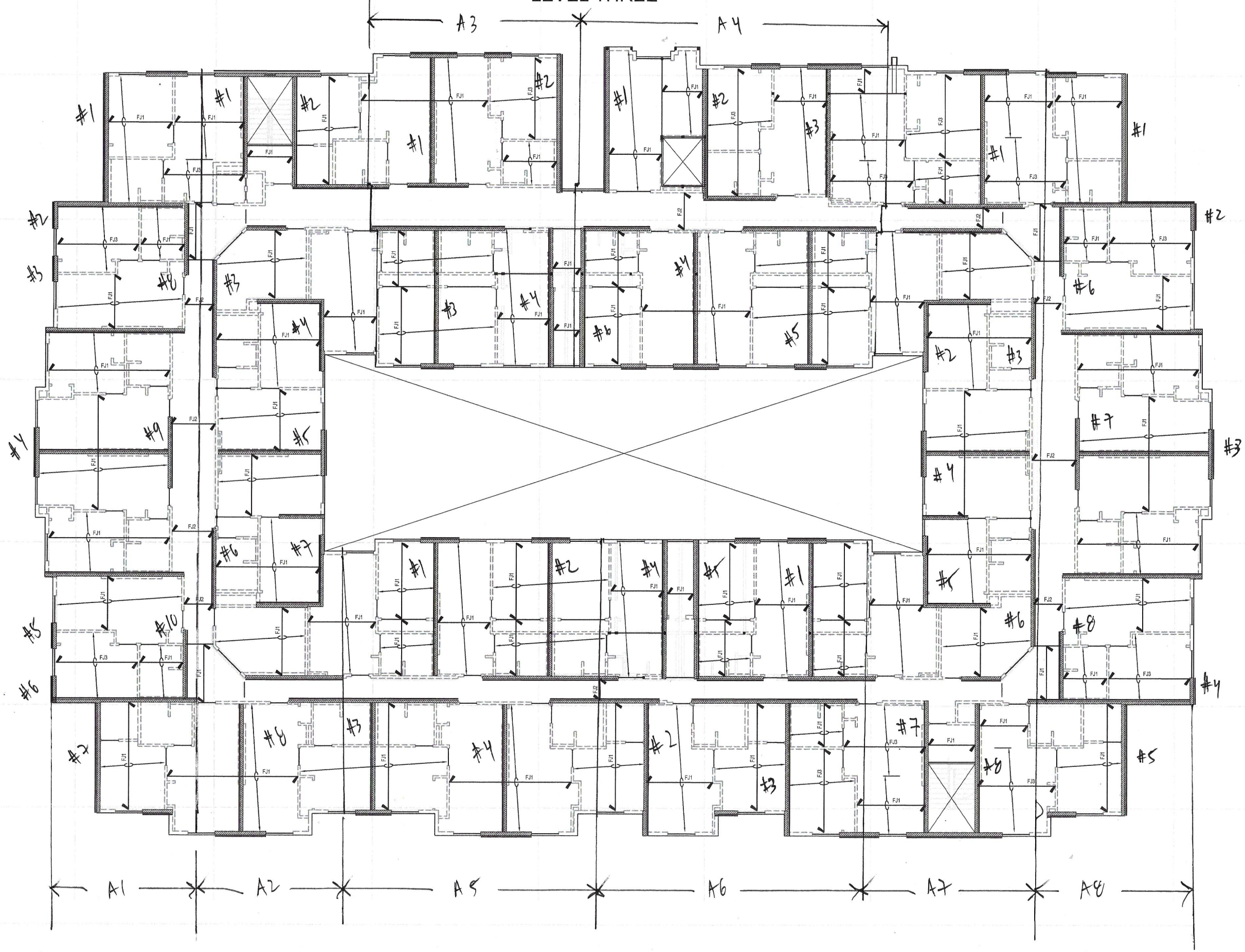

MULTI-STORY WOOD SHEAR WALL DESIGN BASED ON FLEXIBLE DIAPHRAGM ASSUMPTION

N-S DIRECTION ANALYSIS

Level	Shear Per Story	Cumulative Shear
Roof	111.57 kips	111.57 kips
2nd Floor	99.45 kips	211.02 kips

Level	Sub-Area #1	Sub-Area #2	Sub-Area #3	Sub-Area #4	Sub-Area #5	Sub-Area #6	Sub-Area #7	Sub-Area #8	Total Area
Roof	3,440 sq. ft	3,883 sq. ft	2,143 sq. ft	3,034 sq. ft	2,433 sq. ft	2,634 sq. ft	4,183 sq. ft	3,253 sq. ft	25,004 sq. ft
2nd Floor	3,440 sq. ft	3,883 sq. ft	2,069 sq. ft	3,109 sq. ft	2,433 sq. ft	2,634 sq. ft	4,183 sq. ft	3,253 sq. ft	25,004 sq. ft

Level	Sub-Area #1		Sub-Area #2		Sub-Area #3		Sub-Area #4		Sub-Area #5	
	Shear Per Line	Cumulative Shear	Shear Per Line	Cumulative Shear	Shear Per Line	Cumulative Shear	Shear Per Line	Cumulative Shear	Shear Per Line	Cumulative Shear
Roof	15.35 kips	15.35 kips	17.33 kips	17.33 kips	9.56 kips	9.56 kips	13.54 kips	13.54 kips	10.86 kips	10.86 kips
2nd Floor	13.68 kips	29.03 kips	15.44 kips	32.77 kips	8.23 kips	17.79 kips	12.36 kips	25.90 kips	9.68 kips	20.54 kips

Level	Sub-Area #6		Sub-Area #7		Sub-Area #8	
	Shear Per Line	Cumulative Shear	Shear Per Line	Cumulative Shear	Shear Per Line	Cumulative Shear
Roof	11.75 kips	11.75 kips	18.66 kips	18.66 kips	14.51 kips	14.51 kips
2nd Floor	10.48 kips	22.23 kips	16.64 kips	35.30 kips	12.94 kips	27.45 kips

DESIGN LATERAL FORCES ON SHEAR WALLS FOR N-S DIRECTION

SHEAR DISTRIBUTION FOR ROOF - SHEAR LINE NS-A1

WALL No.	Lw (ft)	Hw (ft)	Story Force Per Floor	Story Shear Per Line	Story Shear Cumulative	Distribution Factor	Aspect Ratio H/L	V (pounds)	Add'l Shear	(V/L)	Wall Type	OT (pound-ft)	ASD Uplift (pounds)	Simpson ATS Rod Model	Simpson ATS Capacity
1	23.5	10	111575	15352	15352	21%	0.43	3265	0	138.93	A	32648	1451	MST72	5660
2	5	10	[lbs]	[lbs]	[lbs]	5%	2.00	695	0	138.93	A	6946	1736	MST72	5660
3	4.75	10				4%	2.11	669	0	140.76	A	6686	1782	MST72	5660
4	9	10				8%	1.11	1250	0	138.93	A	12504	1563	MST72	5660
5	4.75	10				4%	2.11	669	0	140.76	A	6686	1782	MST72	5660
6	5	10				5%	2.00	695	0	138.93	A	6946	1735	MST72	5660
7	20	10				18%	0.50	2779	0	138.93	A	27786	1462	MST72	5660
8	13	10				12%	0.77	1806	0	138.93	A	18061	1504	MST72	5660
9	13	10				12%	0.77	1806	0	138.93	A	18061	1504	MST72	5660
10	12.5	10				11%	0.80	1737	0	138.93	A	17366	1509	MST72	5660

SHEAR DISTRIBUTION FOR 2ND FLOOR - SHEAR LINE NS-A1

WALL No.	Lw (ft)	Hw (ft)	Story Force Per Floor	Story Shear Per Line	Story Shear Cumulative	Distribution Factor	Aspect Ratio H/L	V (pounds)	Add'l Shear	(V/L)	Wall Type	OT (pound-ft)	ASD Uplift (pounds)	Simpson ATS Rod Model	Simpson ATS Capacity
1	23.5	10	99447	13683	29035	21%	0.43	2910	3265	262.76	A	94397	4195	HDU8	5227
2	5	10	[lbs]	[lbs]	[lbs]	5%	2.00	619	695	262.76	A	20084	5021	HDU11	8381
3	4.75	10				4%	2.11	596	669	266.22	A	19331	5154	HDU11	8381
4	9	10				8%	1.11	1114	1250	262.76	A	36152	4519	HDU8	5227
5	4.75	10				4%	2.11	596	669	266.22	A	19331	5154	HDU11	8381
6	5	10				5%	2.00	619	695	262.76	A	20084	5020	HDU11	8381
7	20	10				18%	0.50	2477	2779	262.76	A	80338	4228	HDU8	5227
8	13	10				12%	0.77	1610	1806	262.76	A	52219	4351	HDU8	5227
9	13	10				12%	0.77	1610	1806	262.76	A	52219	4351	HDU8	5227
10	12.5	10				11%	0.80	1548	1737	262.76	A	50211	4365	HDU8	5227

SHEATHED SHEAR WALL DEFLECTION

(Per Sec. 2305.3.2 of 2016 CBC - Deflection)
(NDS - SDPWS - 15th Edition - 4.3.2 Deflection)

$\Delta = 8\ v\ h^3 / E\ A\ b + v\ h / 1000\ Ga + d_a\ h / b$

$\Delta_{allow} = 0.02\ h$ **$C_d = 4$**

LEVEL	STORY HEIGHT [ft]	Δ_a [in]
Roof	10	2.400
2nd Floor	10	2.400
First Floor (Base)	-	-

b =	See Below	ft	(Length of wall in ft)
h =	See Above	ft	(Heigth of wall in ft)
v =	See Below	plf	(Maximum shear at top in plf)
d_a =	See Below	in	(Vertical elongation of holdown)
E =	1700000	psi	(Elastic Modulus of boundary elements)
Ga =	See Below	lb/in	(Panel rigidity through thickness lb/in of panel width or depth Table 2305.2.2)
t =	0.469	in	(Sheathing thickness)
A =	See Below	in^2	(Area of boundary element cross section)

SHEAR WALL DEFLECTION AT NS-A1

SHEAR LINE	WALL ID	b (ft)	v (plf)	End Post	A (in^2)	$8vh^3$ / EAb	Wall Type	Ga	v h / 1000 Ga	d_a	d_a h / b	Δ (in)	Δ_m (in)	Δ_{allow} (in)	Check
NS-A1 - Roof	**1**	**23.5**	139	4 x 4	12	0.002	A	13.000	0.107	0.125	0.0532	0.162	0.649326	2.400	**OK**
NS-A1 - Roof	**2**	**5**	139	4 x 4	12	0.011	A	13.000	0.107	0.125	0.2500	0.368	1.470172	2.400	**OK**
NS-A1 - Roof	**3**	**4.75**	141	4 x 4	12	0.011	A	13.000	0.108	0.125	0.2632	0.383	1.531267	2.400	**OK**
NS-A1 - Roof	**4**	**9**	139	4 x 4	12	0.006	A	13.000	0.107	0.125	0.1389	0.252	1.006751	2.400	**OK**
NS-A1 - Roof	**5**	**4.75**	141	4 x 4	12	0.011	A	13.000	0.108	0.125	0.2632	0.383	1.531267	2.400	**OK**
NS-A1 - Roof	**6**	**5**	139	4 x 4	12	0.011	A	13.000	0.107	0.125	0.2500	0.368	1.470172	2.400	**OK**
NS-A1 - Roof	**7**	**20**	139	4 x 4	12	0.003	A	13.000	0.107	0.125	0.0625	0.172	0.68815	2.400	**OK**
NS-A1 - Roof	**8**	**13**	139	4 x 4	12	0.004	A	13.000	0.107	0.125	0.0962	0.207	0.828513	2.400	**OK**
NS-A1 - Roof	**9**	**13**	139	4 x 4	12	0.004	A	13.000	0.107	0.125	0.0962	0.207	0.828513	2.400	**OK**
NS-A1 - Roof	**10**	**12.5**	139	4 x 4	12	0.004	A	13.000	0.107	0.125	0.1000	0.211	0.844554	2.400	**OK**
NS-A1 - 2nd Floor	**1**	**23.5**	263	4 x 4	12	0.004	A	13.000	0.202	0.125	0.0532	0.260	1.038434	2.400	**OK**
NS-A1 - 2nd Floor	**2**	**5**	263	4 x 4	12	0.020	A	13.000	0.202	0.125	0.2500	0.472	1.889238	2.400	**OK**
NS-A1 - 2nd Floor	**3**	**4.75**	266	4 x 4	12	0.022	A	13.000	0.205	0.125	0.2632	0.489	1.957877	2.400	**OK**
NS-A1 - 2nd Floor	**4**	**9**	263	4 x 4	12	0.011	A	13.000	0.202	0.125	0.1389	0.352	1.408904	2.400	**OK**
NS-A1 - 2nd Floor	**5**	**4.75**	266	4 x 4	12	0.022	A	13.000	0.205	0.125	0.2632	0.489	1.957877	2.400	**OK**
NS-A1 - 2nd Floor	**6**	**5**	263	4 x 4	12	0.020	A	13.000	0.202	0.125	0.2500	0.472	1.889238	2.400	**OK**
NS-A1 - 2nd Floor	**7**	**20**	263	4 x 4	12	0.005	A	13.000	0.202	0.125	0.0625	0.270	1.078675	2.400	**OK**
NS-A1 - 2nd Floor	**8**	**13**	263	4 x 4	12	0.008	A	13.000	0.202	0.125	0.0962	0.306	1.224161	2.400	**OK**
NS-A1 - 2nd Floor	**9**	**13**	263	4 x 4	12	0.008	A	13.000	0.202	0.125	0.0962	0.306	1.224161	2.400	**OK**
NS-A1 - 2nd Floor	**10**	**12.5**	263	4 x 4	12	0.008	A	13.000	0.202	0.125	0.1000	0.310	1.240787	2.400	**OK**

DESIGN LATERAL FORCES ON SHEAR WALLS FOR N-S DIRECTION

SHEAR DISTRIBUTION FOR ROOF - SHEAR LINE NS-A2

WALL No.	Lw (ft)	Hw (ft)	Story Force Per Floor	Story Shear Per Line	Story Shear Cumulative	Distribution Factor	Aspect Ratio H/L	V (pounds)	Add'l Shear	(V/L)	Wall Type	OT (pound-ft)	ASD Uplift (pounds)	Simpson ATS Rod Model	Simpson ATS Capacity
1	17.5	10	111575	17328	17328	13%	0.57	2324	0	132.78	A	23237	1408	MST72	5660
2	20	10	[lbs]	[lbs]	[lbs]	15%	0.50	2656	0	132.78	A	26557	1398	MST72	5660
3	21.5	10				16%	0.47	2855	0	132.78	A	28548	1393	MST72	5660
4	13	10				10%	0.77	1726	0	132.78	A	17262	1438	MST72	5660
5	8	10				6%	1.25	1062	0	132.78	A	10623	1518	MST72	5660
6	14.5	10				11%	0.69	1925	0	132.78	A	19254	1426	MST72	5660
7	13	10				10%	0.77	1726	0	132.78	A	17262	1438	MST72	5660
8	23	10				18%	0.43	3054	0	132.78	A	30540	1388	MST72	5660

SHEAR DISTRIBUTION FOR 2ND FLOOR - SHEAR LINE NS-A2

WALL No.	Lw (ft)	Hw (ft)	Story Force Per Floor	Story Shear Per Line	Story Shear Cumulative	Distribution Factor	Aspect Ratio H/L	V (pounds)	Add'l Shear	(V/L)	Wall Type	OT (pound-ft)	ASD Uplift (pounds)	Simpson ATS Rod Model	Simpson ATS Capacity
1	17.5	10	99447	15445	32773	13%	0.57	2071	2324	251.13	A	67186	4072	HDU8	5227
2	20	10	[lbs]	[lbs]	[lbs]	15%	0.50	2367	2656	251.13	A	76784	4041	HDU8	5227
3	21.5	10				16%	0.47	2545	2855	251.13	A	82542	4026	HDU8	5227
4	13	10				10%	0.77	1539	1726	251.13	A	49909	4159	HDU8	5227
5	8	10				6%	1.25	947	1062	251.13	A	30713	4388	HDU8	5227
6	14.5	10				11%	0.69	1716	1925	251.13	A	55668	4124	HDU8	5227
7	13	10				10%	0.77	1539	1726	251.13	A	49909	4159	HDU8	5227
8	23	10				18%	0.43	2722	3054	251.13	A	88301	4014	HDU8	5227

SHEATHED SHEAR WALL DEFLECTION

(Per Sec. 2305.3.2 of 2016 CBC - Deflection)
(NDS - SDPWS - 15th Edition - 4.3.2 Deflection)

$\Delta = 8\ v\ h^3 / E\ A\ b + v\ h / 1000\ Ga + d_a\ h / b$

$\Delta_{allow} = 0.02\ h$ **$C_d = 4$**

LEVEL	STORY HEIGHT [ft]	Δ_a [in]
Roof	10	2.400
2nd Floor	10	2.400
First Floor (Base)	-	-

b =	See Below	ft	(Length of wall in ft)
h =	See Above	ft	(Heigth of wall in ft)
v =	See Below	plf	(Maximum shear at top in plf)
d_a =	See Below	in	(Vertical elongation of holdown)
E =	1700000	psi	(Elastic Modulus of boundary elements)
Ga =	See Below	lb/in	(Panel rigidity through thickness lb/in of panel width or depth Table 2305.2.2)
t =	0.469	in	(Sheathing thickness)
A =	See Below	in^2	(Area of boundary element cross section)

SHEAR WALL DEFLECTION AT NS-A2

SHEAR LINE	WALL ID	b (ft)	v (plf)	End Post	A (in^2)	$8vh^3$ / EAb	Wall Type	Ga	v h / 1000 Ga	d_a	d_a h / b	Δ (in)	Δ_m (in)	Δ_{allow} (in)	Check
NS-A2 - Roof	**1**	**17.5**	133	4 x 4	12	0.003	A	13.000	0.102	0.125	0.0714	0.176	0.705938	2.400	**OK**
NS-A2 - Roof	**2**	**20**	133	4 x 4	12	0.003	A	13.000	0.102	0.125	0.0625	0.167	0.668767	2.400	**OK**
NS-A2 - Roof	**3**	**21.5**	133	4 x 4	12	0.002	A	13.000	0.102	0.125	0.0581	0.163	0.650613	2.400	**OK**
NS-A2 - Roof	**4**	**13**	133	4 x 4	12	0.004	A	13.000	0.102	0.125	0.0962	0.202	0.808875	2.400	**OK**
NS-A2 - Roof	**5**	**8**	133	4 x 4	12	0.006	A	13.000	0.102	0.125	0.1563	0.265	1.059069	2.400	**OK**
NS-A2 - Roof	**6**	**14.5**	133	4 x 4	12	0.004	A	13.000	0.102	0.125	0.0862	0.192	0.767464	2.400	**OK**
NS-A2 - Roof	**7**	**13**	133	4 x 4	12	0.004	A	13.000	0.102	0.125	0.0962	0.202	0.808875	2.400	**OK**
NS-A2 - Roof	**8**	**23**	133	4 x 4	12	0.002	A	13.000	0.102	0.125	0.0543	0.159	0.634827	2.400	**OK**
NS-A2 - 2nd Floor	**1**	**17.5**	251	4 x 4	12	0.006	A	13.000	0.193	0.125	0.0714	0.270	1.080486	2.400	**OK**
NS-A2 - 2nd Floor	**2**	**20**	251	4 x 4	12	0.005	A	13.000	0.193	0.125	0.0625	0.261	1.042015	2.400	**OK**
NS-A2 - 2nd Floor	**3**	**21.5**	251	4 x 4	12	0.004	A	13.000	0.193	0.125	0.0581	0.256	1.023227	2.400	**OK**
NS-A2 - 2nd Floor	**4**	**13**	251	4 x 4	12	0.007	A	13.000	0.193	0.125	0.0962	0.297	1.18702	2.400	**OK**
NS-A2 - 2nd Floor	**5**	**8**	251	4 x 4	12	0.012	A	13.000	0.193	0.125	0.1563	0.361	1.445957	2.400	**OK**
NS-A2 - 2nd Floor	**6**	**14.5**	251	4 x 4	12	0.007	A	13.000	0.193	0.125	0.0862	0.286	1.144161	2.400	**OK**
NS-A2 - 2nd Floor	**7**	**13**	251	4 x 4	12	0.007	A	13.000	0.193	0.125	0.0962	0.297	1.18702	2.400	**OK**
NS-A2 - 2nd Floor	**8**	**23**	251	4 x 4	12	0.004	A	13.000	0.193	0.125	0.0543	0.252	1.00689	2.400	**OK**

DESIGN LATERAL FORCES ON SHEAR WALLS FOR N-S DIRECTION

SHEAR DISTRIBUTION FOR ROOF - SHEAR LINE NS-A3

WALL No.	Lw (ft)	Hw (ft)	Story Force Per Floor	Story Shear Per Line	Story Shear Cumulative	Distribution Factor	Aspect Ratio H/L	V (pounds)	Add'l Shear	(V/L)	Wall Type	OT (pound-ft)	ASD Uplift (pounds)	Simpson ATS Rod Model	Simpson ATS Capacity
1	23	10	111575	9564	9564	32%	0.43	3013	0	131.01	A	30132	1370	MST72	5660
2	24.5	10	[lbs]	[lbs]	[lbs]	34%	0.41	3210	0	131.01	A	32097	1366	MST72	5660
3	25.5	10				35%	0.39	3341	0	131.01	A	33407	1364	MST72	5660

SHEAR DISTRIBUTION FOR 2ND FLOOR - SHEAR LINE NS-A3

WALL No.	Lw (ft)	Hw (ft)	Story Force Per Floor	Story Shear Per Line	Story Shear Cumulative	Distribution Factor	Aspect Ratio H/L	V (pounds)	Add'l Shear	(V/L)	Wall Type	OT (pound-ft)	ASD Uplift (pounds)	Simpson ATS Rod Model	Simpson ATS Capacity
1	23	10	99447	8229	17793	23%	0.43	1921	3013	214.55	A	79479	3613	HDU8	5227
2	24.5	10	[lbs]	[lbs]	[lbs]	25%	0.41	2047	3210	214.55	A	84662	3603	HDU8	5227
3	25.5	10				26%	0.39	2130	3341	214.55	A	88118	3597	HDU8	5227
4	25.5	10				26%	0.39	2130	2476	180.63	A	70820	2891	HDU8	5227

SHEATHED SHEAR WALL DEFLECTION

(Per Sec. 2305.3.2 of 2016 CBC - Deflection)
(NDS - SDPWS - 15th Edition - 4.3.2 Deflection)

$\Delta = 8\ v\ h^3 / E\ A\ b + v\ h / 1000\ Ga + d_a\ h / b$

$\Delta_{allow} = 0.02\ h$ **$C_d = 4$**

LEVEL	STORY HEIGHT [ft]	Δ_a [in]
Roof	10	2.400
2nd Floor	10	2.400
First Floor (Base)	-	-

b =	See Below	ft	(Length of wall in ft)
h =	See Above	ft	(Heigth of wall in ft)
v =	See Below	plf	(Maximum shear at top in plf)
d_a =	See Below	in	(Vertical elongation of holdown)
E =	1700000	psi	(Elastic Modulus of boundary elements)
Ga =	See Below	lb/in	(Panel rigidity through thickness lb/in of panel width or depth Table 2305.2.2)
t =	0.469	in	(Sheathing thickness)
A =	See Below	in^2	(Area of boundary element cross section)

SHEAR WALL DEFLECTION AT NS-A3

SHEAR LINE	WALL ID	b (ft)	v (plf)	End Post	A (in^2)	$8vh^3$ / EAb	Wall Type	Ga	v h / 1000 Ga	d_a	d_a h / b	Δ (in)	Δ_m (in)	Δ_{allow} (in)	Check
NS-A3 - Roof	**1**	**23**	131	4 x 4	12	0.002	A	13.000	0.101	0.125	0.0543	0.157	0.629247	2.400	**OK**
NS-A3 - Roof	**2**	**24.5**	131	4 x 4	12	0.002	A	13.000	0.101	0.125	0.0510	0.154	0.615401	2.400	**OK**
NS-A3 - Roof	**3**	**25.5**	131	4 x 4	12	0.002	A	13.000	0.101	0.125	0.0490	0.152	0.607076	2.400	**OK**
NS-A3 - 2nd Floor	**1**	**23**	215	4 x 4	12	0.004	A	13.000	0.165	0.125	0.0543	0.223	0.891881	2.400	**OK**
NS-A3 - 2nd Floor	**2**	**24.5**	215	4 x 4	12	0.003	A	13.000	0.165	0.125	0.0510	0.219	0.877694	2.400	**OK**
NS-A3 - 2nd Floor	**3**	**25.5**	215	4 x 4	12	0.003	A	13.000	0.165	0.125	0.0490	0.217	0.869163	2.400	**OK**
NS-A3 - 2nd Floor	**4**	**25.5**	181	4 x 4	12	0.003	A	13.000	0.139	0.125	0.0490	0.191	0.762763	2.400	**OK**

DESIGN LATERAL FORCES ON SHEAR WALLS FOR N-S DIRECTION

SHEAR DISTRIBUTION FOR ROOF - SHEAR LINE NS-A4

WALL No.	Lw (ft)	Hw (ft)	Story Force Per Floor	Story Shear Per Line	Story Shear Cumulative	Distribution Factor	Aspect Ratio H/L	V (pounds)	Add'l Shear	(V/L)	Wall Type	OT (pound-ft)	ASD Uplift (pounds)	Simpson ATS Rod Model	Simpson ATS Capacity
1	26.5	10	111575	13540	13540	21%	0.38	2905	0	109.64	A	29054	1139	MST72	5660
2	23.5	10	[lbs]	[lbs]	[lbs]	19%	0.43	2576	0	109.64	A	25765	1145	MST72	5660
3	25	10				20%	0.40	2741	0	109.64	A	27409	1142	MST72	5660
4	24	10				19%	0.42	2631	0	109.64	A	26313	1144	MST72	5660
5	24.5	10				20%	0.41	2686	0	109.64	A	26861	1143	MST72	5660

SHEAR DISTRIBUTION FOR 2ND FLOOR - SHEAR LINE NS-A4

WALL No.	Lw (ft)	Hw (ft)	Story Force Per Floor	Story Shear Per Line	Story Shear Cumulative	Distribution Factor	Aspect Ratio H/L	V (pounds)	Add'l Shear	(V/L)	Wall Type	OT (pound-ft)	ASD Uplift (pounds)	Simpson ATS Rod Model	Simpson ATS Capacity
1	26.5	10	99447	12364	25904	18%	0.38	2199	2905	192.61	A	80097	3141	HDU8	5227
2	23.5	10	[lbs]	[lbs]	[lbs]	16%	0.43	1950	2576	192.61	A	71029	3157	HDU8	5227
3	25	10				17%	0.40	2074	2741	192.61	A	75563	3148	HDU8	5227
4	24	10				16%	0.42	1991	2631	192.61	A	72540	3154	HDU8	5227
5	24.5	10				16%	0.41	2033	2686	192.61	A	74052	3151	HDU8	5227
6	25.5	10				17%	0.39	2116	2317	173.85	A	67505	2755	HDU8	5227

SHEATHED SHEAR WALL DEFLECTION

(Per Sec. 2305.3.2 of 2016 CBC - Deflection)
(NDS - SDPWS - 15th Edition - 4.3.2 Deflection)

$\Delta = 8\ v\ h^3 / E\ A\ b + v\ h / 1000\ Ga + d_a\ h / b$

$\Delta_{allow} = 0.02\ h$ **$C_d = 4$**

LEVEL	STORY HEIGHT [ft]	Δ_a [in]
Roof	10	2.400
2nd Floor	10	2.400
First Floor (Base)	-	-

b =	See Below	ft	(Length of wall in ft)
h =	See Above	ft	(Heigth of wall in ft)
v =	See Below	plf	(Maximum shear at top in plf)
d_a =	See Below	in	(Vertical elongation of holdown)
E =	1700000	psi	(Elastic Modulus of boundary elements)
Ga =	See Below	lb/in	(Panel rigidity through thickness lb/in of panel width or depth Table 2305.2.2)
t =	0.469	in	(Sheathing thickness)
A =	See Below	in^2	(Area of boundary element cross section)

SHEAR WALL DEFLECTION AT NS-A4

SHEAR LINE	WALL ID	b (ft)	v (plf)	End Post	A (in^2)	$8vh^3$ / EAb	Wall Type	Ga	v h / 1000 Ga	d_a	d_a h / b	Δ (in)	Δ_m (in)	Δ_{allow} (in)	Check
NS-A4 - Roof	**1**	**26.5**	110	4 x 4	12	0.002	A	13.000	0.084	0.125	0.0472	0.133	0.532382	2.400	**OK**
NS-A4 - Roof	**2**	**23.5**	110	4 x 4	12	0.002	A	13.000	0.084	0.125	0.0532	0.139	0.55728	2.400	**OK**
NS-A4 - Roof	**3**	**25**	110	4 x 4	12	0.002	A	13.000	0.084	0.125	0.0500	0.136	0.544084	2.400	**OK**
NS-A4 - Roof	**4**	**24**	110	4 x 4	12	0.002	A	13.000	0.084	0.125	0.0521	0.138	0.552698	2.400	**OK**
NS-A4 - Roof	**5**	**24.5**	110	4 x 4	12	0.002	A	13.000	0.084	0.125	0.0510	0.137	0.548303	2.400	**OK**
NS-A4 - 2nd Floor	**1**	**26.5**	193	4 x 4	12	0.003	A	13.000	0.148	0.125	0.0472	0.198	0.792508	2.400	**OK**
NS-A4 - 2nd Floor	**2**	**23.5**	193	4 x 4	12	0.003	A	13.000	0.148	0.125	0.0532	0.205	0.81802	2.400	**OK**
NS-A4 - 2nd Floor	**3**	**25**	193	4 x 4	12	0.003	A	13.000	0.148	0.125	0.0500	0.201	0.804499	2.400	**OK**
NS-A4 - 2nd Floor	**4**	**24**	193	4 x 4	12	0.003	A	13.000	0.148	0.125	0.0521	0.203	0.813325	2.400	**OK**
NS-A4 - 2nd Floor	**5**	**24.5**	193	4 x 4	12	0.003	A	13.000	0.148	0.125	0.0510	0.202	0.808822	2.400	**OK**
NS-A4 - 2nd Floor	**6**	**25.5**	174	4 x 4	12	0.003	A	13.000	0.134	0.125	0.0490	0.185	0.741481	2.400	**OK**

DESIGN LATERAL FORCES ON SHEAR WALLS FOR N-S DIRECTION

SHEAR DISTRIBUTION FOR ROOF - SHEAR LINE NS-A5

WALL No.	Lw (ft)	Hw (ft)	Story Force Per Floor	Story Shear Per Line	Story Shear Cumulative	Distribution Factor	Aspect Ratio H/L	V (pounds)	Add'l Shear	(V/L)	Wall Type	OT (pound-ft)	ASD Uplift (pounds)	Simpson ATS Rod Model	Simpson ATS Capacity
1	24.5	10	111575	10858	10858	27%	0.41	2907	0	118.67	A	29074	1237	MST72	5660
2	24.5	10	[lbs]	[lbs]	[lbs]	27%	0.41	2907	0	118.67	A	29074	1237	MST72	5660
3	19.5	10				21%	0.51	2314	0	118.67	A	23140	1251	MST72	5660
4	23	10				25%	0.43	2729	0	118.67	A	27294	1240	MST72	5660

SHEAR DISTRIBUTION FOR 2ND FLOOR - SHEAR LINE NS-A5

WALL No.	Lw (ft)	Hw (ft)	Story Force Per Floor	Story Shear Per Line	Story Shear Cumulative	Distribution Factor	Aspect Ratio H/L	V (pounds)	Add'l Shear	(V/L)	Wall Type	OT (pound-ft)	ASD Uplift (pounds)	Simpson ATS Rod Model	Simpson ATS Capacity
1	24.5	10	99447	9678	20536	27%	0.41	2591	2907	224.44	A	84061	3577	HDU8	5227
2	24.5	10	[lbs]	[lbs]	[lbs]	27%	0.41	2591	2907	224.44	A	84061	3577	HDU8	5227
3	19.5	10				21%	0.51	2062	2314	224.44	A	66905	3617	HDU8	5227
4	23	10				25%	0.43	2433	2729	224.44	A	78914	3587	HDU8	5227

SHEATHED SHEAR WALL DEFLECTION

(Per Sec. 2305.3.2 of 2016 CBC - Deflection)
(NDS - SDPWS - 15th Edition - 4.3.2 Deflection)

$\Delta = 8\ v\ h^3 / E\ A\ b + v\ h / 1000\ Ga + d_a\ h / b$

$\Delta_{allow} = 0.02\ h$ **$C_d = 4$**

LEVEL	STORY HEIGHT [ft]	Δ_a [in]
Roof	10	2.400
2nd Floor	10	2.400
First Floor (Base)	-	-

b =	See Below	ft	(Length of wall in ft)
h =	See Above	ft	(Heigth of wall in ft)
v =	See Below	plf	(Maximum shear at top in plf)
d_a =	See Below	in	(Vertical elongation of holdown)
E =	1700000	psi	(Elastic Modulus of boundary elements)
Ga =	See Below	lb/in	(Panel rigidity through thickness lb/in of panel width or depth Table 2305.2.2)
t =	0.469	in	(Sheathing thickness)
A =	See Below	in^2	(Area of boundary element cross section)

SHEAR WALL DEFLECTION AT NS-A5

SHEAR LINE	WALL ID	b (ft)	v (plf)	End Post	A (in^2)	$8vh^3$ / EAb	Wall Type	Ga	v h / 1000 Ga	d_a	d_a h / b	Δ (in)	Δ_m (in)	Δ_{allow} (in)	Check
NS-A5 - Roof	**1**	**24.5**	119	4 x 4	12	0.002	A	13.000	0.091	0.125	0.0510	0.144	0.576656	2.400	**OK**
NS-A5 - Roof	**2**	**24.5**	119	4 x 4	12	0.002	A	13.000	0.091	0.125	0.0510	0.144	0.576656	2.400	**OK**
NS-A5 - Roof	**3**	**19.5**	119	4 x 4	12	0.002	A	13.000	0.091	0.125	0.0641	0.158	0.630893	2.400	**OK**
NS-A5 - 2nd Floor	**1**	**24.5**	224	4 x 4	12	0.004	A	13.000	0.173	0.125	0.0510	0.227	0.908733	2.400	**OK**
NS-A5 - 2nd Floor	**2**	**24.5**	224	4 x 4	12	0.004	A	13.000	0.173	0.125	0.0510	0.227	0.908733	2.400	**OK**
NS-A5 - 2nd Floor	**3**	**19.5**	224	4 x 4	12	0.004	A	13.000	0.173	0.125	0.0641	0.241	0.964671	2.400	**OK**
NS-A5 - 2nd Floor	**4**	**23**	224	4 x 4	12	0.004	A	13.000	0.173	0.125	0.0543	0.231	0.922961	2.400	**OK**

DESIGN LATERAL FORCES ON SHEAR WALLS FOR N-S DIRECTION

SHEAR DISTRIBUTION FOR ROOF - SHEAR LINE NS-A6

WALL No.	Lw (ft)	Hw (ft)	Story Force Per Floor	Story Shear Per Line	Story Shear Cumulative	Distribution Factor	Aspect Ratio H/L	V (pounds)	Add'l Shear	(V/L)	Wall Type	OT (pound-ft)	ASD Uplift (pounds)	Simpson ATS Rod Model	Simpson ATS Capacity
1	24.5	10	111575	11754	11754	34%	0.41	3972	0	162.13	A	39721	1690	MST72	5660
2	24	10	[lbs]	[lbs]	[lbs]	33%	0.42	3891	0	162.13	A	38910	1692	MST72	5660
3	24	10				33%	0.42	3891	0	162.13	A	38910	1692	MST72	5660

SHEAR DISTRIBUTION FOR 2ND FLOOR - SHEAR LINE NS-A6

WALL No.	Lw (ft)	Hw (ft)	Story Force Per Floor	Story Shear Per Line	Story Shear Cumulative	Distribution Factor	Aspect Ratio H/L	V (pounds)	Add'l Shear	(V/L)	Wall Type	OT (pound-ft)	ASD Uplift (pounds)	Simpson ATS Rod Model	Simpson ATS Capacity
1	24.5	10	99447	10476	22231	20%	0.41	2078	3972	246.96	A	100225	4265	HDU8	5227
2	24	10	[lbs]	[lbs]	[lbs]	19%	0.42	2036	3891	246.96	A	98179	4269	HDU8	5227
3	24	10				19%	0.42	2036	3891	246.96	A	98179	4269	HDU8	5227
4	25.5	10				21%	0.39	2163	2427	180.00	A	70171	2864	HDU8	5227
5	25.5	10				21%	0.39	2163	2427	180.00	A	70171	2864	HDU8	5227

SHEATHED SHEAR WALL DEFLECTION

(Per Sec. 2305.3.2 of 2016 CBC - Deflection)
(NDS - SDPWS - 15th Edition - 4.3.2 Deflection)

$\Delta = 8\ v\ h^3 / E\ A\ b + v\ h / 1000\ Ga + d_a\ h / b$

$\Delta_{allow} = 0.02\ h$ **$C_d = 4$**

LEVEL	STORY HEIGHT [ft]	Δ_a [in]
Roof	10	2.400
2nd Floor	10	2.400
First Floor (Base)	-	-

b =	See Below	ft	(Length of wall in ft)
h =	See Above	ft	(Heigth of wall in ft)
v =	See Below	plf	(Maximum shear at top in plf)
d_a =	See Below	in	(Vertical elongation of holdown)
E =	1700000	psi	(Elastic Modulus of boundary elements)
Ga =	See Below	lb/in	(Panel rigidity through thickness lb/in of panel width or depth Table 2305.2.2)
t =	0.469	in	(Sheathing thickness)
A =	See Below	in^2	(Area of boundary element cross section)

SHEAR WALL DEFLECTION AT NS-A6

SHEAR LINE	WALL ID	b (ft)	v (plf)	End Post	A (in^2)	$8vh^3$ / EAb	Wall Type	Ga	v h / 1000 Ga	d_a	d_a h / b	Δ (in)	Δ_m (in)	Δ_{allow} (in)	Check
NS-A6 - Roof	**1**	**24.5**	162	4 x 4	12	0.003	A	13.000	0.125	0.125	0.0510	0.178	0.713097	2.400	**OK**
NS-A6 - Roof	**2**	**24**	162	4 x 4	12	0.003	A	13.000	0.125	0.125	0.0521	0.179	0.717561	2.400	**OK**
NS-A6 - Roof	**3**	**24**	162	4 x 4	12	0.003	A	13.000	0.125	0.125	0.0521	0.179	0.717561	2.400	**OK**
NS-A6 - 2nd Floor	**1**	**24.5**	247	4 x 4	12	0.004	A	13.000	0.190	0.125	0.0510	0.245	0.979432	2.400	**OK**
NS-A6 - 2nd Floor	**2**	**24**	247	4 x 4	12	0.004	A	13.000	0.190	0.125	0.0521	0.246	0.984007	2.400	**OK**
NS-A6 - 2nd Floor	**3**	**24**	247	4 x 4	12	0.004	A	13.000	0.190	0.125	0.0521	0.246	0.984007	2.400	**OK**
NS-A6 - 2nd Floor	**4**	**25.5**	180	4 x 4	12	0.003	A	13.000	0.138	0.125	0.0490	0.190	0.760785	2.400	**OK**
NS-A6 - 2nd Floor	**5**	**25.5**	180	4 x 4	12	0.003	A	13.000	0.138	0.125	0.0490	0.190	0.760785	2.400	**OK**

DESIGN LATERAL FORCES ON SHEAR WALLS FOR N-S DIRECTION

SHEAR DISTRIBUTION FOR ROOF - SHEAR LINE NS-A7

WALL No.	Lw (ft)	Hw (ft)	Story Force Per Floor	Story Shear Per Line	Story Shear Cumulative	Distribution Factor	Aspect Ratio H/L	V (pounds)	Add'l Shear	(V/L)	Wall Type	OT (pound-ft)	ASD Uplift (pounds)	Simpson ATS Rod Model	Simpson ATS Capacity
1	23.5	10	111575	18665	18665	17%	0.43	3122	0	132.84	A	31218	1387	MST72	5660
2	12.5	10	[lbs]	[lbs]	[lbs]	9%	0.80	1661	0	132.84	A	16606	1444	MST72	5660
3	14.5	10				10%	0.69	1926	0	132.84	A	19262	1427	MST72	5660
4	8	10				6%	1.25	1063	0	132.84	A	10628	1518	MST72	5660
5	13	10				9%	0.77	1727	0	132.84	A	17270	1439	MST72	5660
6	21.5	10				15%	0.47	2856	0	132.84	A	28561	1393	MST72	5660
7	24	10				17%	0.42	3188	0	132.84	A	31883	1386	MST72	5660
8	23.5	10				17%	0.43	3122	0	132.84	A	31218	1387	MST72	5660

SHEAR DISTRIBUTION FOR 2ND FLOOR - SHEAR LINE NS-A7

WALL No.	Lw (ft)	Hw (ft)	Story Force Per Floor	Story Shear Per Line	Story Shear Cumulative	Distribution Factor	Aspect Ratio H/L	V (pounds)	Add'l Shear	(V/L)	Wall Type	OT (pound-ft)	ASD Uplift (pounds)	Simpson ATS Rod Model	Simpson ATS Capacity
1	23.5	10	99447	16636	35300	17%	0.43	2783	3122	251.25	A	90262	4012	HDU8	5227
2	12.5	10	[lbs]	[lbs]	[lbs]	9%	0.80	1480	1661	251.25	A	48012	4175	HDU8	5227
3	14.5	10				10%	0.69	1717	1926	251.25	A	55693	4125	HDU8	5227
4	8	10				6%	1.25	947	1063	251.25	A	30727	4390	HDU8	5227
5	13	10				9%	0.77	1539	1727	251.25	A	49932	4161	HDU8	5227
6	21.5	10				15%	0.47	2546	2856	251.25	A	82580	4028	HDU8	5227
7	24	10				17%	0.42	2842	3188	251.25	A	92182	4008	HDU8	5227
8	23.5	10				17%	0.43	2783	3122	251.25	A	90262	4012	HDU8	5227

SHEATHED SHEAR WALL DEFLECTION

(Per Sec. 2305.3.2 of 2016 CBC - Deflection)
(NDS - SDPWS - 15th Edition - 4.3.2 Deflection)

$\Delta = 8\ v\ h^3 / E\ A\ b + v\ h / 1000\ Ga + d_a\ h / b$

$\Delta_{allow} = 0.02\ h$ **$C_d = 4$**

LEVEL	STORY HEIGHT [ft]	Δ_a [in]
Roof	10	2.400
2nd Floor	10	2.400
First Floor (Base)	-	-

b =	See Below	ft	(Length of wall in ft)
h =	See Above	ft	(Heigth of wall in ft)
v =	See Below	plf	(Maximum shear at top in plf)
d_a =	See Below	in	(Vertical elongation of holdown)
E =	1700000	psi	(Elastic Modulus of boundary elements)
Ga =	See Below	lb/in	(Panel rigidity through thickness lb/in of panel width or depth Table 2305.2.2)
t =	0.469	in	(Sheathing thickness)
A =	See Below	in^2	(Area of boundary element cross section)

SHEAR WALL DEFLECTION AT NS-A7

SHEAR LINE	WALL ID	b (ft)	v (plf)	End Post	A (in^2)	$8vh^3$ / EAb	Wall Type	Ga	v h / 1000 Ga	d_a	d_a h / b	Δ (in)	Δ_m (in)	Δ_{allow} (in)	Check
NS-A7 - Roof	**1**	**23.5**	133	4 x 4	12	0.002	A	13.000	0.102	0.125	0.0532	0.158	0.630203	2.400	**OK**
NS-A7 - Roof	**2**	**12.5**	133	4 x 4	12	0.004	A	13.000	0.102	0.125	0.1000	0.206	0.825081	2.400	**OK**
NS-A7 - Roof	**3**	**14.5**	133	4 x 4	12	0.004	A	13.000	0.102	0.125	0.0862	0.192	0.767656	2.400	**OK**
NS-A7 - Roof	**4**	**8**	133	4 x 4	12	0.006	A	13.000	0.102	0.125	0.1563	0.265	1.059267	2.400	**OK**
NS-A7 - Roof	**5**	**13**	133	4 x 4	12	0.004	A	13.000	0.102	0.125	0.0962	0.202	0.809069	2.400	**OK**
NS-A7 - Roof	**6**	**21.5**	133	4 x 4	12	0.002	A	13.000	0.102	0.125	0.0581	0.163	0.650803	2.400	**OK**
NS-A7 - Roof	**7**	**24**	133	4 x 4	12	0.002	A	13.000	0.102	0.125	0.0521	0.156	0.62559	2.400	**OK**
NS-A7 - Roof	**8**	**23.5**	133	4 x 4	12	0.002	A	13.000	0.102	0.125	0.0532	0.158	0.630203	2.400	**OK**
NS-A7 - 2nd Floor	**1**	**23.5**	251	4 x 4	12	0.004	A	13.000	0.193	0.125	0.0532	0.251	1.002267	2.400	**OK**
NS-A7 - 2nd Floor	**2**	**12.5**	251	4 x 4	12	0.008	A	13.000	0.193	0.125	0.1000	0.301	1.203958	2.400	**OK**
NS-A7 - 2nd Floor	**3**	**14.5**	251	4 x 4	12	0.007	A	13.000	0.193	0.125	0.0862	0.286	1.144526	2.400	**OK**
NS-A7 - 2nd Floor	**4**	**8**	251	4 x 4	12	0.012	A	13.000	0.193	0.125	0.1563	0.362	1.446331	2.400	**OK**
NS-A7 - 2nd Floor	**5**	**13**	251	4 x 4	12	0.007	A	13.000	0.193	0.125	0.0962	0.297	1.187385	2.400	**OK**
NS-A7 - 2nd Floor	**6**	**21.5**	251	4 x 4	12	0.004	A	13.000	0.193	0.125	0.0581	0.256	1.023587	2.400	**OK**
NS-A7 - 2nd Floor	**7**	**24**	251	4 x 4	12	0.004	A	13.000	0.193	0.125	0.0521	0.249	0.997492	2.400	**OK**
NS-A7 - 2nd Floor	**8**	**23.5**	251	4 x 4	12	0.004	A	13.000	0.193	0.125	0.0532	0.251	1.002267	2.400	**OK**

DESIGN LATERAL FORCES ON SHEAR WALLS FOR N-S DIRECTION

SHEAR DISTRIBUTION FOR ROOF - SHEAR LINE NS-A8

WALL No.	Lw (ft)	Hw (ft)	Story Force Per Floor	Story Shear Per Line	Story Shear Cumulative	Distribution Factor	Aspect Ratio H/L	V (pounds)	Add'l Shear	(V/L)	Wall Type	OT (pound-ft)	ASD Uplift (pounds)	Simpson ATS Rod Model	Simpson ATS Capacity
1	24.5	10	111575	14514	14514	24%	0.41	3503	0	143.00	A	35034	1491	MST72	5660
2	5	10	[lbs]	[lbs]	[lbs]	5%	2.00	715	0	143.00	A	7150	1787	MST72	5660
3	9	10				9%	1.11	1287	0	143.00	A	12870	1609	MST72	5660
4	5	10				5%	2.00	715	0	143.00	A	7150	1787	MST72	5660
5	20	10				20%	0.50	2860	0	143.00	A	28599	1505	MST72	5660
6	12.5	10				12%	0.80	1787	0	143.00	A	17875	1554	MST72	5660
7	13	10				13%	0.77	1859	0	143.00	A	18590	1549	MST72	5660
8	12.5	10				12%	0.80	1787	0	143.00	A	17875	1554	MST72	5660

SHEAR DISTRIBUTION FOR 2ND FLOOR - SHEAR LINE NS-A8

WALL No.	Lw (ft)	Hw (ft)	Story Force Per Floor	Story Shear Per Line	Story Shear Cumulative	Distribution Factor	Aspect Ratio H/L	V (pounds)	Add'l Shear	(V/L)	Wall Type	OT (pound-ft)	ASD Uplift (pounds)	Simpson ATS Rod Model	Simpson ATS Capacity
1	24.5	10	99447	12936	27451	24%	0.41	3123	3503	270.45	A	101294	4310	HDU8	5227
2	5	10	[lbs]	[lbs]	[lbs]	5%	2.00	637	715	270.45	A	20672	5168	HDU8	5227
3	9	10				9%	1.11	1147	1287	270.45	A	37210	4651	HDU8	5227
4	5	10				5%	2.00	637	715	270.45	A	20672	5168	HDU8	5227
5	20	10				20%	0.50	2549	2860	270.45	A	82689	4352	HDU8	5227
6	12.5	10				12%	0.80	1593	1787	270.45	A	51681	4494	HDU8	5227
7	13	10				13%	0.77	1657	1859	270.45	A	53748	4479	HDU8	5227
8	12.5	10				12%	0.80	1593	1787	270.45	A	51681	4494	HDU8	5227

SHEATHED SHEAR WALL DEFLECTION

(Per Sec. 2305.3.2 of 2016 CBC - Deflection)
(NDS - SDPWS - 15th Edition - 4.3.2 Deflection)

$\Delta = 8\ v\ h^3 / E\ A\ b + v\ h / 1000\ Ga + d_a\ h / b$

$\Delta_{allow} = 0.02\ h$ **$C_d = 4$**

LEVEL	STORY HEIGHT [ft]	Δ_a [in]
Roof	10	2.400
2nd Floor	10	2.400
First Floor (Base)	-	-

b =	See Below	ft	(Length of wall in ft)
h =	See Above	ft	(Heigth of wall in ft)
v =	See Below	plf	(Maximum shear at top in plf)
d_a =	See Below	in	(Vertical elongation of holdown)
E =	1700000	psi	(Elastic Modulus of boundary elements)
Ga =	See Below	lb/in	(Panel rigidity through thickness lb/in of panel width or depth Table 2305.2.2)
t =	0.469	in	(Sheathing thickness)
A =	See Below	in^2	(Area of boundary element cross section)

SHEAR WALL DEFLECTION AT NS-A8

SHEAR LINE	WALL ID	b (ft)	v (plf)	End Post	A (in^2)	$8vh^3$ / EAb	Wall Type	Ga	v h / 1000 Ga	d_a	d_a h / b	Δ (in)	Δ_m (in)	Δ_{allow} (in)	Check
NS-A8 - Roof	**1**	**24.5**	143	4 x 4	12	0.002	A	13.000	0.110	0.125	0.0510	0.163	0.653039	2.400	**OK**
NS-A7 - Roof	**2**	**5**	143	4 x 4	12	0.011	A	13.000	0.110	0.125	0.2500	0.371	1.483934	2.400	**OK**
NS-A7 - Roof	**3**	**9**	143	4 x 4	12	0.006	A	13.000	0.110	0.125	0.1389	0.255	1.019958	2.400	**OK**
NS-A7 - Roof	**4**	**5**	143	4 x 4	12	0.011	A	13.000	0.110	0.125	0.2500	0.371	1.483934	2.400	**OK**
NS-A7 - Roof	**5**	**20**	143	4 x 4	12	0.003	A	13.000	0.110	0.125	0.0625	0.175	0.700975	2.400	**OK**
NS-A7 - Roof	**6**	**12.5**	143	4 x 4	12	0.004	A	13.000	0.110	0.125	0.1000	0.214	0.857567	2.400	**OK**
NS-A7 - Roof	**7**	**13**	143	4 x 4	12	0.004	A	13.000	0.110	0.125	0.0962	0.210	0.841506	2.400	**OK**
NS-A7 - Roof	**8**	**12.5**	143	4 x 4	12	0.004	A	13.000	0.110	0.125	0.1000	0.214	0.857567	2.400	**OK**
NS-A8 - 2nd Floor	**1**	**24.5**	270	4 x 4	12	0.004	A	13.000	0.208	0.125	0.0510	0.263	1.053196	2.400	**OK**
NS-A7 - 2nd Floor	**2**	**5**	270	4 x 4	12	0.021	A	13.000	0.208	0.125	0.2500	0.479	1.915267	2.400	**OK**
NS-A7 - 2nd Floor	**3**	**9**	270	4 x 4	12	0.012	A	13.000	0.208	0.125	0.1389	0.358	1.433883	2.400	**OK**
NS-A7 - 2nd Floor	**4**	**5**	270	4 x 4	12	0.021	A	13.000	0.208	0.125	0.2500	0.479	1.915267	2.400	**OK**
NS-A7 - 2nd Floor	**5**	**20**	270	4 x 4	12	0.005	A	13.000	0.208	0.125	0.0625	0.276	1.102931	2.400	**OK**
NS-A7 - 2nd Floor	**6**	**12.5**	270	4 x 4	12	0.008	A	13.000	0.208	0.125	0.1000	0.316	1.265398	2.400	**OK**
NS-A7 - 2nd Floor	**7**	**13**	270	4 x 4	12	0.008	A	13.000	0.208	0.125	0.0962	0.312	1.248735	2.400	**OK**
NS-A7 - 2nd Floor	**8**	**12.5**	270	4 x 4	12	0.008	A	13.000	0.208	0.125	0.1000	0.316	1.265398	2.400	**OK**

THANG LE, S.E.
STRUCTURAL ENGINEER
Phone: (626) 731-1539 Fax: (626) 447-3400

TWO-WAY SLAB ANALYSIS

THANG LE & ASSOCIATES

STRUCTURAL ENGINEERS

ESSEX PROJECT

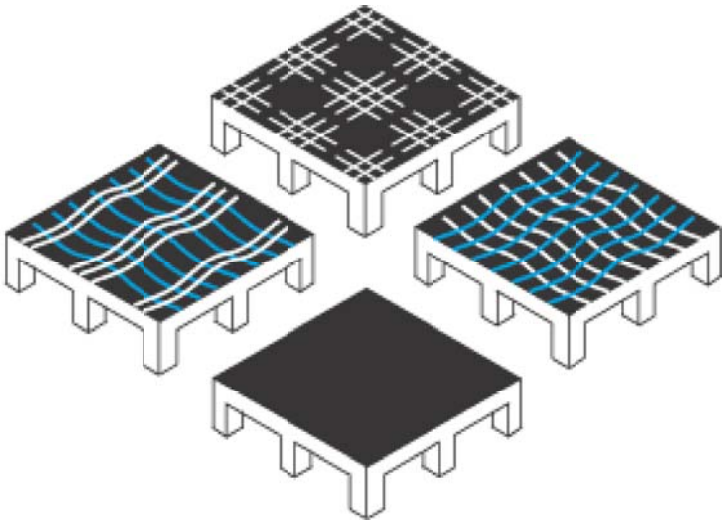

04.19.21 - ESSEX - Recheck.cpt
7/27/2021
TWO-WAY SLAB ANALYSIS

RAM Concept © 2021 Bentley Systems, Inc.
RAM Concept™ is a trademark of Bentley Systems

8.2

Table of Contents

Loadings 3
Load Combinations 4
Detailing Rules 8
Load History 9
Element: Standard Plan 10
Element: Slab Summary Plan 11
Other Dead Loading: All Loads Plan 12
Live (Unreducible) Loading: All Loads Plan 13
Design Strip: Latitude Design Spans Plan 14
Design Strip: Longitude Design Spans Plan 15
Design Strip: Punching Checks Plan 16
Reinforcement: Top Bars Plan 17
Reinforcement: Bottom Bars Plan 18
Self Weight: Std Deflection Plan 19
Sustained Load: Std Deflection Plan 20
Dead Load Only: Std Deflection Plan 21
Final Instantaneous : Std Deflection Plan 22
Final Instantaneous : Final Instantaneous Load - Live Load Only Plan 23
Design Status: Status Plan 24
Design Status: Punching Shear Status Plan 25

Loadings

Loading Name	*Type*	*Analysis*	*On-Pattern Factor*	*Off-Pattern Factor*
Self-Dead Loading	Self-Weight	Normal	1	1
Balance Loading	Balance	Normal	1	1
Hyperstatic Loading	Hyperstatic	Hyperstatic	1	1
Temporary Construction (At Stressing) Loading	Stressing Dead	Normal	1	1
Other Dead Loading	Dead	Normal	1	1
Live (Reducible) Loading	Live (Reducible)	Normal	1	0
Live (Unreducible) Loading	Live (Unreducible)	Normal	1	0
Live (Storage) Loading	Live (Storage)	Normal	1	0
Live (Parking) Loading	Live (Parking)	Normal	1	0
Live (Roof) Loading	Live (Roof)	Normal	1	0
Snow Loading	Snow	Normal	1	1

Load Combinations

All Dead LC

Active Design Criteria: <none>
Analysis: Linear

Loading	*Standard Factor*	*Alt. Envelope Factor*
Self-Dead Loading	1	1
Other Dead Loading	1	1

Dead + Balance LC

Active Design Criteria: <none>
Analysis: Linear

Loading	*Standard Factor*	*Alt. Envelope Factor*
Self-Dead Loading	1	1
Balance Loading	1	1
Other Dead Loading	1	1

Initial Service LC

Active Design Criteria: Initial Service Design
Analysis: Linear

Loading	*Standard Factor*	*Alt. Envelope Factor*
Self-Dead Loading	1	1
Balance Loading	1.13	1.13
Temporary Construction (At Stressing) Loading	1	1

Service LC: D + L

Active Design Criteria: User Minimum Design, Code Minimum Design, Service Design
Analysis: Linear

Loading	*Standard Factor*	*Alt. Envelope Factor*
Self-Dead Loading	1	1
Balance Loading	1	1
Other Dead Loading	1	1
Live (Reducible) Loading	1	0
Live (Unreducible) Loading	1	0
Live (Storage) Loading	1	0
Live (Parking) Loading	1	0

Service LC: D + Lr

Active Design Criteria: User Minimum Design, Code Minimum Design, Service Design
Analysis: Linear

Loading	*Standard Factor*	*Alt. Envelope Factor*
Self-Dead Loading	1	1
Balance Loading	1	1
Other Dead Loading	1	1
Live (Roof) Loading	1	0

Load Combinations (2)

Service LC: D + S

Active Design Criteria: User Minimum Design, Code Minimum Design, Service Design
Analysis: Linear

Loading	*Standard Factor*	*Alt. Envelope Factor*
Self-Dead Loading	1	1
Balance Loading	1	1
Other Dead Loading	1	1
Snow Loading	1	0

Service LC: D + 0.75L + 0.75Lr

Active Design Criteria: User Minimum Design, Code Minimum Design, Service Design
Analysis: Linear

Loading	*Standard Factor*	*Alt. Envelope Factor*
Self-Dead Loading	1	1
Balance Loading	1	1
Other Dead Loading	1	1
Live (Reducible) Loading	0.75	0
Live (Unreducible) Loading	0.75	0
Live (Storage) Loading	0.75	0
Live (Parking) Loading	0.75	0
Live (Roof) Loading	0.75	0

Service LC: D + 0.75L + 0.75S

Active Design Criteria: User Minimum Design, Code Minimum Design, Service Design
Analysis: Linear

Loading	*Standard Factor*	*Alt. Envelope Factor*
Self-Dead Loading	1	1
Balance Loading	1	1
Other Dead Loading	1	1
Live (Reducible) Loading	0.75	0
Live (Unreducible) Loading	0.75	0
Live (Storage) Loading	0.75	0
Live (Parking) Loading	0.75	0
Snow Loading	0.75	0

Sustained Service LC

Active Design Criteria: Sustained Service Design
Analysis: Linear

Loading	*Standard Factor*	*Alt. Envelope Factor*
Self-Dead Loading	1	1
Balance Loading	1	1
Other Dead Loading	1	1
Live (Reducible) Loading	0.5	0.5
Live (Unreducible) Loading	0.5	0.5
Live (Storage) Loading	1	1
Live (Parking) Loading	0.5	0.5
Live (Roof) Loading	0.5	0.5

Load Combinations (3)

Factored LC: 1.4D

Active Design Criteria: User Minimum Design, Code Minimum Design, Strength Design, Ductility Design
Analysis: Linear

Loading	*Standard Factor*	*Alt. Envelope Factor*
Self-Dead Loading	1.4	0.9
Hyperstatic Loading	1	1
Other Dead Loading	1.4	0.9

Factored LC: 1.2D + 1.6L + 0.5Lr

Active Design Criteria: User Minimum Design, Code Minimum Design, Strength Design, Ductility Design
Analysis: Linear

Loading	*Standard Factor*	*Alt. Envelope Factor*
Self-Dead Loading	1.2	0.9
Hyperstatic Loading	1	1
Other Dead Loading	1.2	0.9
Live (Reducible) Loading	1.6	0
Live (Unreducible) Loading	1.6	0
Live (Storage) Loading	1.6	0
Live (Parking) Loading	1.6	0
Live (Roof) Loading	0.5	0

Factored LC: 1.2D + f1L + 1.6Lr

Active Design Criteria: User Minimum Design, Code Minimum Design, Strength Design, Ductility Design
Analysis: Linear

Loading	*Standard Factor*	*Alt. Envelope Factor*
Self-Dead Loading	1.2	0.9
Hyperstatic Loading	1	1
Other Dead Loading	1.2	0.9
Live (Reducible) Loading	0.5	0
Live (Unreducible) Loading	1	0
Live (Storage) Loading	1	0
Live (Parking) Loading	1	0
Live (Roof) Loading	1.6	0

Factored LC: 1.2D + 1.6L + 0.5S

Active Design Criteria: User Minimum Design, Code Minimum Design, Strength Design, Ductility Design
Analysis: Linear

Loading	*Standard Factor*	*Alt. Envelope Factor*
Self-Dead Loading	1.2	0.9
Hyperstatic Loading	1	1
Other Dead Loading	1.2	0.9
Live (Reducible) Loading	1.6	0
Live (Unreducible) Loading	1.6	0
Live (Storage) Loading	1.6	0
Live (Parking) Loading	1.6	0
Snow Loading	0.5	0

Load Combinations (4)

Factored LC: 1.2D + f1L + 1.6S

Active Design Criteria: User Minimum Design, Code Minimum Design, Strength Design, Ductility Design
Analysis: Linear

Loading	*Standard Factor*	*Alt. Envelope Factor*
Self-Dead Loading	1.2	0.9
Hyperstatic Loading	1	1
Other Dead Loading	1.2	0.9
Live (Reducible) Loading	0.5	0
Live (Unreducible) Loading	1	0
Live (Storage) Loading	1	0
Live (Parking) Loading	1	0
Snow Loading	1.6	0

Detailing Rules

Custom Span Detailing Rules

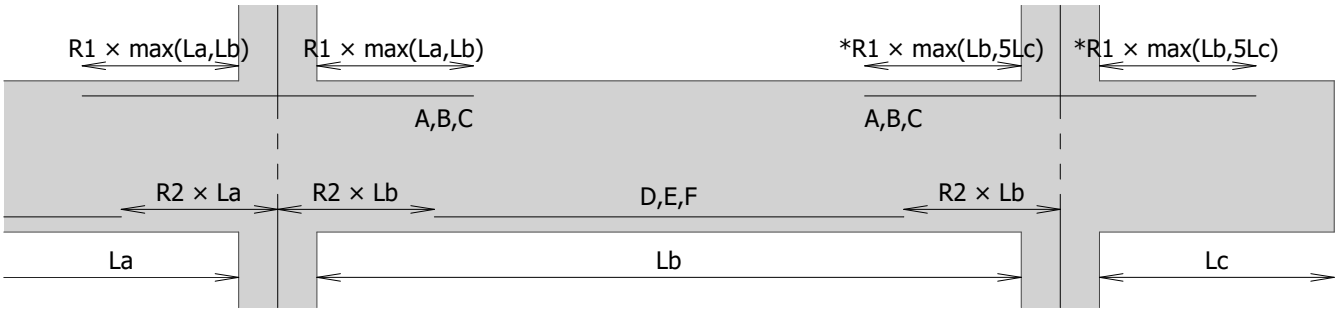

Rule Name	*A Fraction*	*A R1*	*B Fraction*	*B R1*	*C Fraction*	*C R1*	*D Fraction*	*D R2*	*E Fraction*	*E R2*	*F Fraction*	*F R2*
None	0	0	0	0	0	0	0	0	0	0	0	0
Typical	0	0.333	0	0.333	0	0.333	0	0	0	0	0	0

"A", "B" and "C", are support reinforcement sets, based on the peak reinforcement in the support zone.
"D", "E" and "F", are span reinforcement sets, based on the peak reinforcement in the span zone.
"*R1" is never taken as greater than 0.2 when multiplied by Lc (or Lcc).
"Fraction" is the ratio of set reinforcement to peak reinforcement. It is always in the 0.0 to 1.0 range.

Load History

Load History Step Name	*Load Combination*	*Duration (days)*	*Total Age (days)*
Self Weight	Initial Service LC	7	14
Sustained Load	Sustained Service LC	1825	1839
Dead Load Only	All Dead LC	0	1839
Final Instantaneous	Service LC: D + L	0	1839

Element: Standard Plan

Element: User Lines; User Notes; User Dimensions; Wall Elements Below; Wall Elements Above; Column Elements Below; Column Elements Above; Slab Elements; Point Springs; Point Spring Icons; Line Springs; Line Spring Icons; Area Springs; Area S
Scale = 1:310

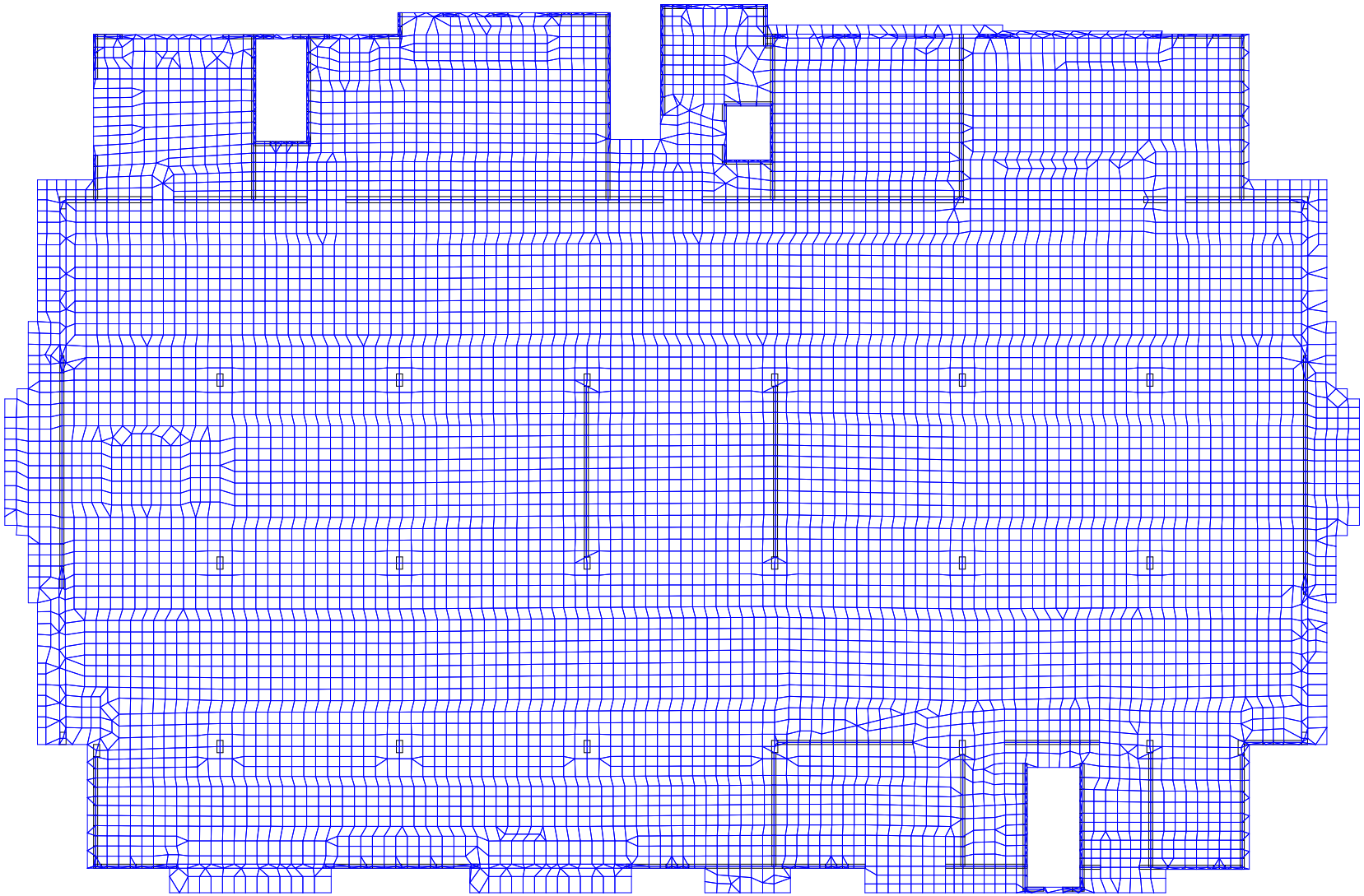

C10

Element: Slab Summary Plan

Element: User Lines; User Notes; User Dimensions; Wall Elements Below; Wall Elements Above; Column Elements Below; Column Elements Above; Point Springs; Point Spring Icons; Line Springs; Line Spring Icons; Slab Elements; Slab Element Outline
Scale = 1:310

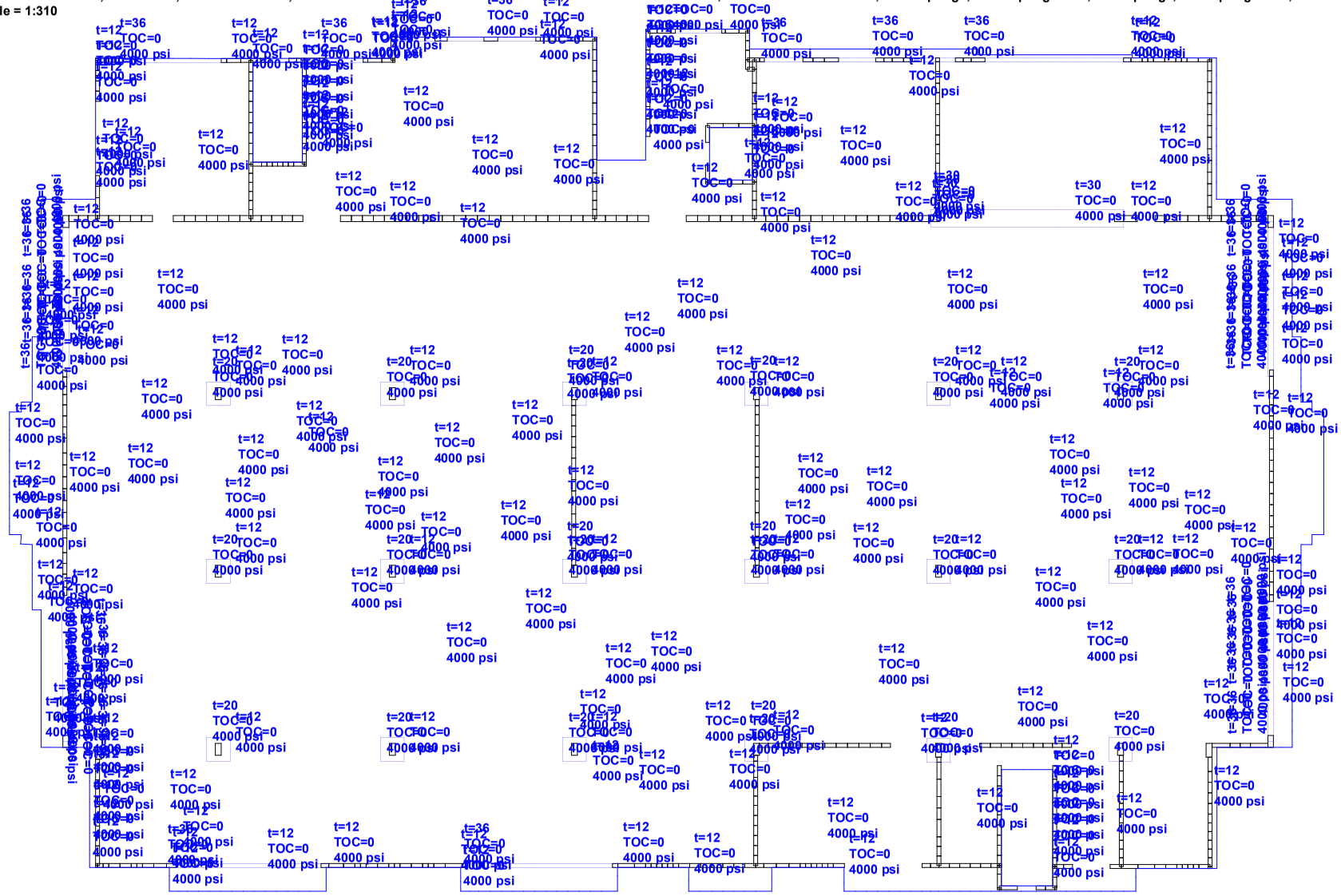

C11

Other Dead Loading: All Loads Plan

Other Dead Loading: User Lines; User Notes; User Dimensions; Point Loads; Point Load Icons; Point Load Values; Line Loads; Line Load Icons; Line Load Values; Area Loads; Area Load Icons; Area Load Values;
Element: Wall Elements Below; Wall Elements Above; Wall Element Outline Only; Column Elements Below; Column Elements Above; Slab Elements; Slab Element Outline Only;
Scale = 1:310

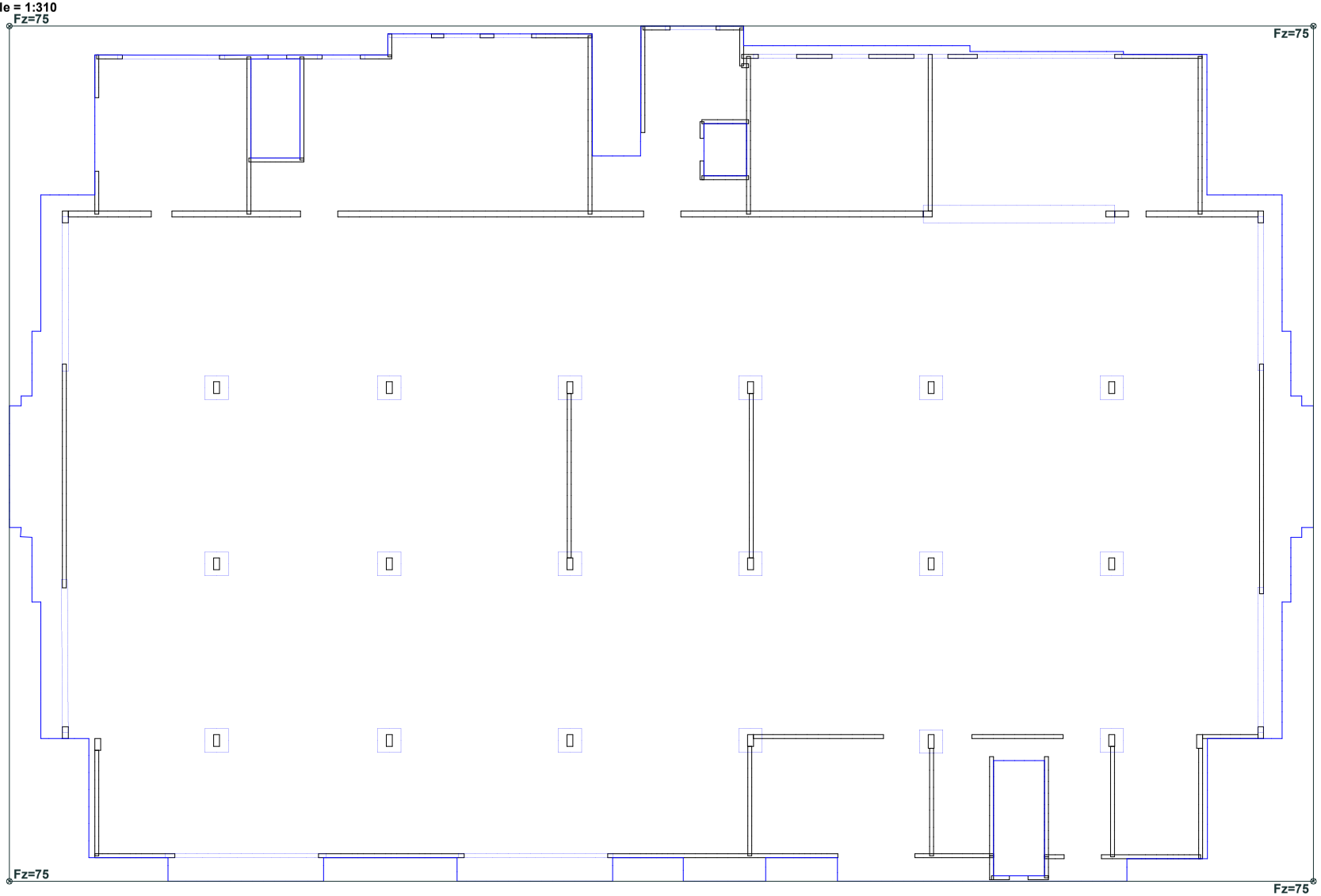

C12

Live (Unreducible) Loading: All Loads Plan

Live (Unreducible) Loading: User Lines; User Notes; User Dimensions; Point Loads; Point Load Icons; Point Load Values; Line Loads; Line Load Icons; Line Load Values; Area Loads; Area Load Icons; Area Load Values;
Element: Wall Elements Below; Wall Elements Above; Wall Element Outline Only; Column Elements Below; Column Elements Above; Slab Elements; Slab Element Outline Only;
Scale = 1:310

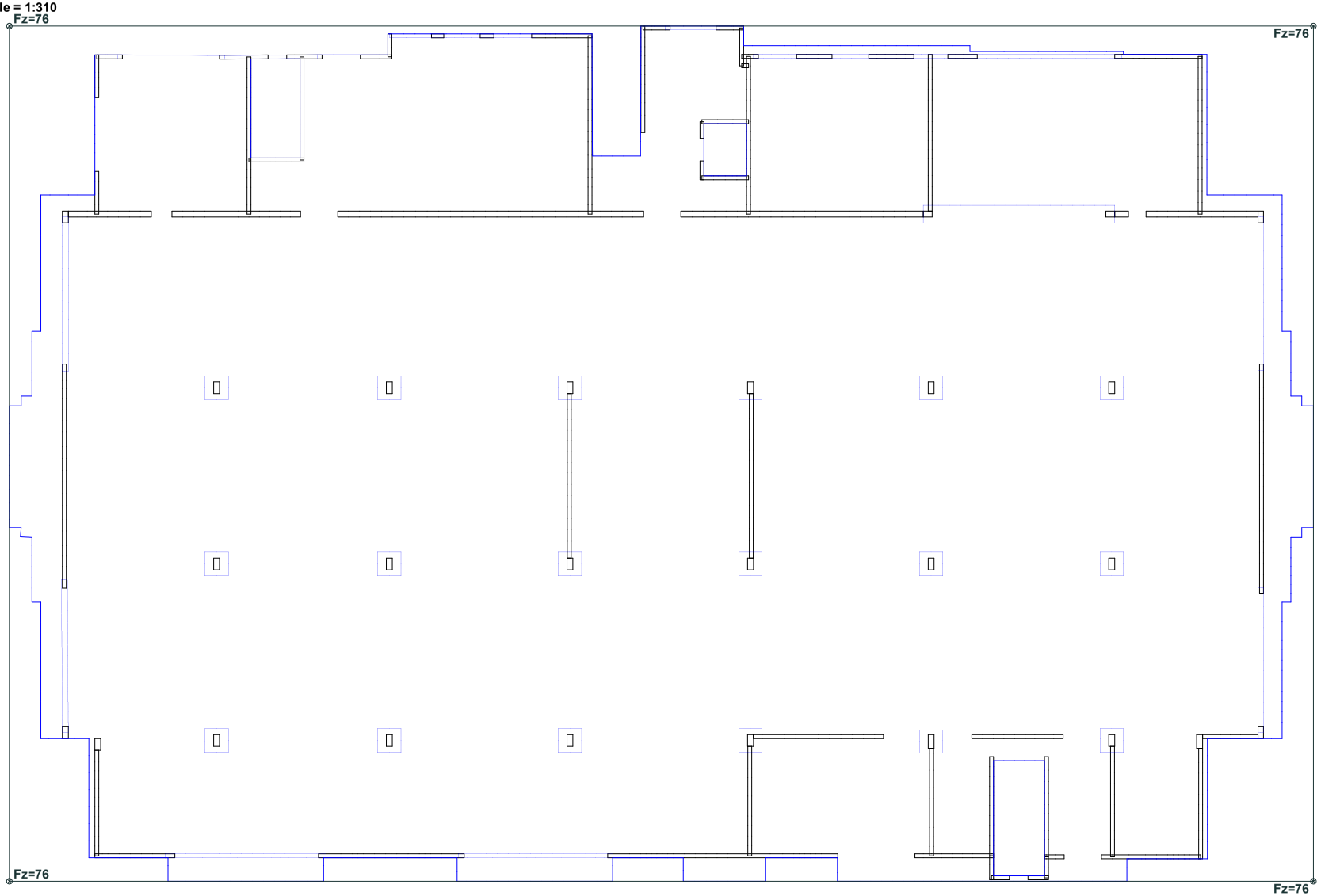

C13

Design Strip: Latitude Design Spans Plan

Design Strip: Latitude Span Boundaries; Latitude SSs; Latitude DSs; Latitude Strip Boundaries; Latitude SSSs; SSS Hatching; User Notes; User Lines; User Dimensions;
Element: Wall Elements Above; Wall Elements Below; Wall Element Outline Only; Column Elements Above; Column Elements Below; Slab Elements; Slab Element Outline Only;
Scale = 1:310

C14

Design Strip: Longitude Design Spans Plan

Design Strip: Longitude Span Boundaries; Longitude SSs; SS Numbers; Longitude DSs; Longitude Strip Boundaries; Longitude SSSs; SSS Hatching; User Notes; User Lines; User Dimensions;
Element: Wall Elements Above; Wall Elements Below; Wall Element Outline Only; Column Elements Above; Column Elements Below; Slab Elements; Slab Element Outline Only;
Scale = 1:310

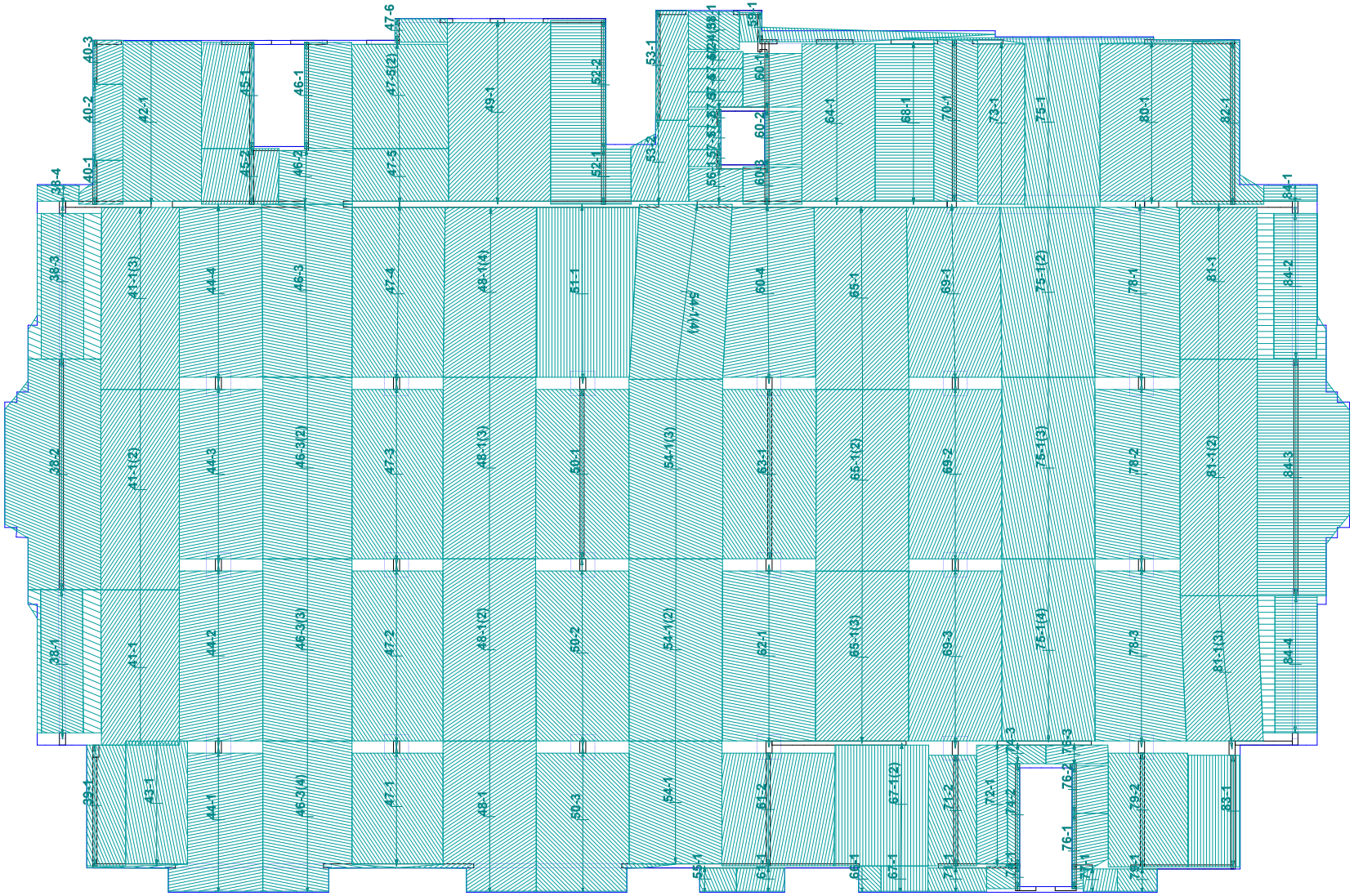

Design Strip: Punching Checks Plan

Design Strip: User Lines; User Notes; User Dimensions; Punching Checks; Punching Check Sections;
Element: Wall Elements Below; Wall Elements Above; Wall Element Outline Only; Column Elements Below; Column Elements Above; Slab Elements; Slab Element Outline Only;
Scale = 1:310

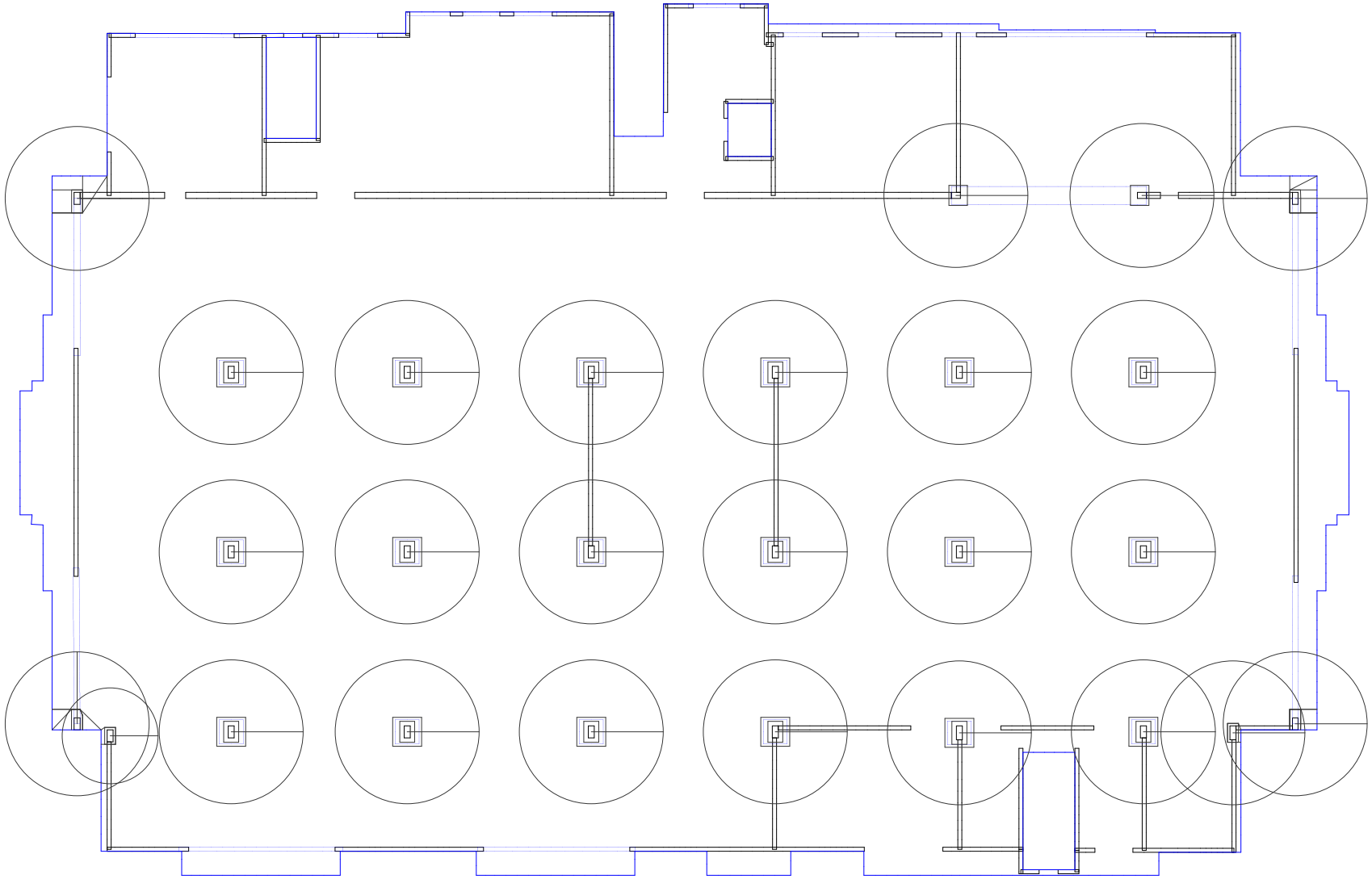

C16

Reinforcement: Top Bars Plan

Reinforcement: Latitude User Concentrated Reinf.; Longitude User Concentrated Reinf.; Top Face Concentrated Reinf.; Both Faces Concentrated Reinf.; Concentrated Reinf. Descriptions; Concentrated Reinf. Extent; Latitude User Distributed Reinf.; Long
Element: Wall Elements Above; Wall Elements Below; Wall Element Outline Only; Column Elements Above; Column Elements Below; Slab Elements; Slab Element Outline Only;
Scale = 1:310

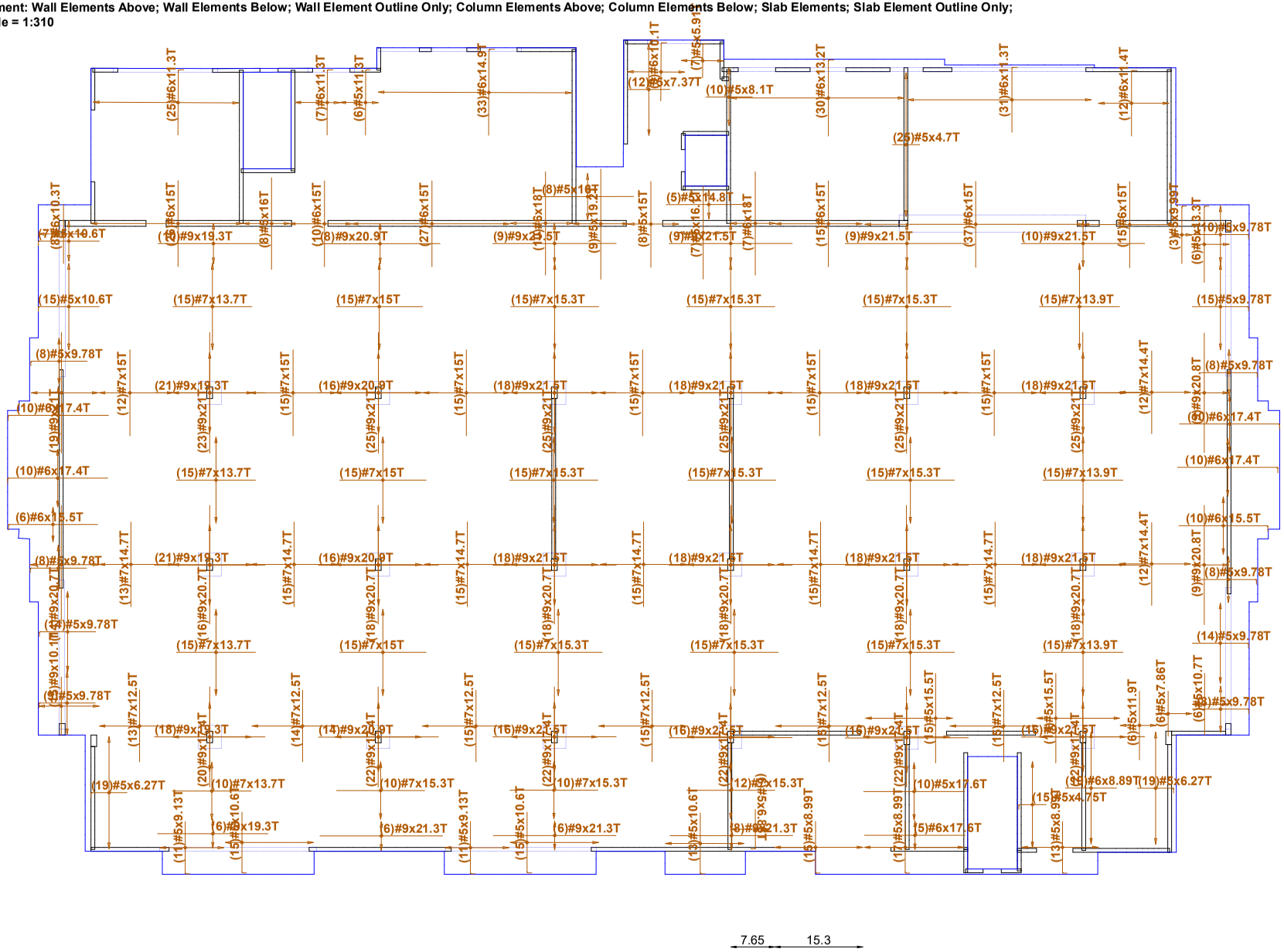

Reinforcement: Bottom Bars Plan

Reinforcement: Latitude User Concentrated Reinf.; Longitude User Concentrated Reinf.; Bottom Face Concentrated Reinf.; Both Faces Concentrated Reinf.; Concentrated Reinf. Descriptions; Concentrated Reinf. Extent; Latitude User Distributed Reinf.; L
Element: Wall Elements Above; Wall Elements Below; Wall Element Outline Only; Column Elements Above; Column Elements Below; Slab Elements; Slab Element Outline Only;
Scale = 1:310

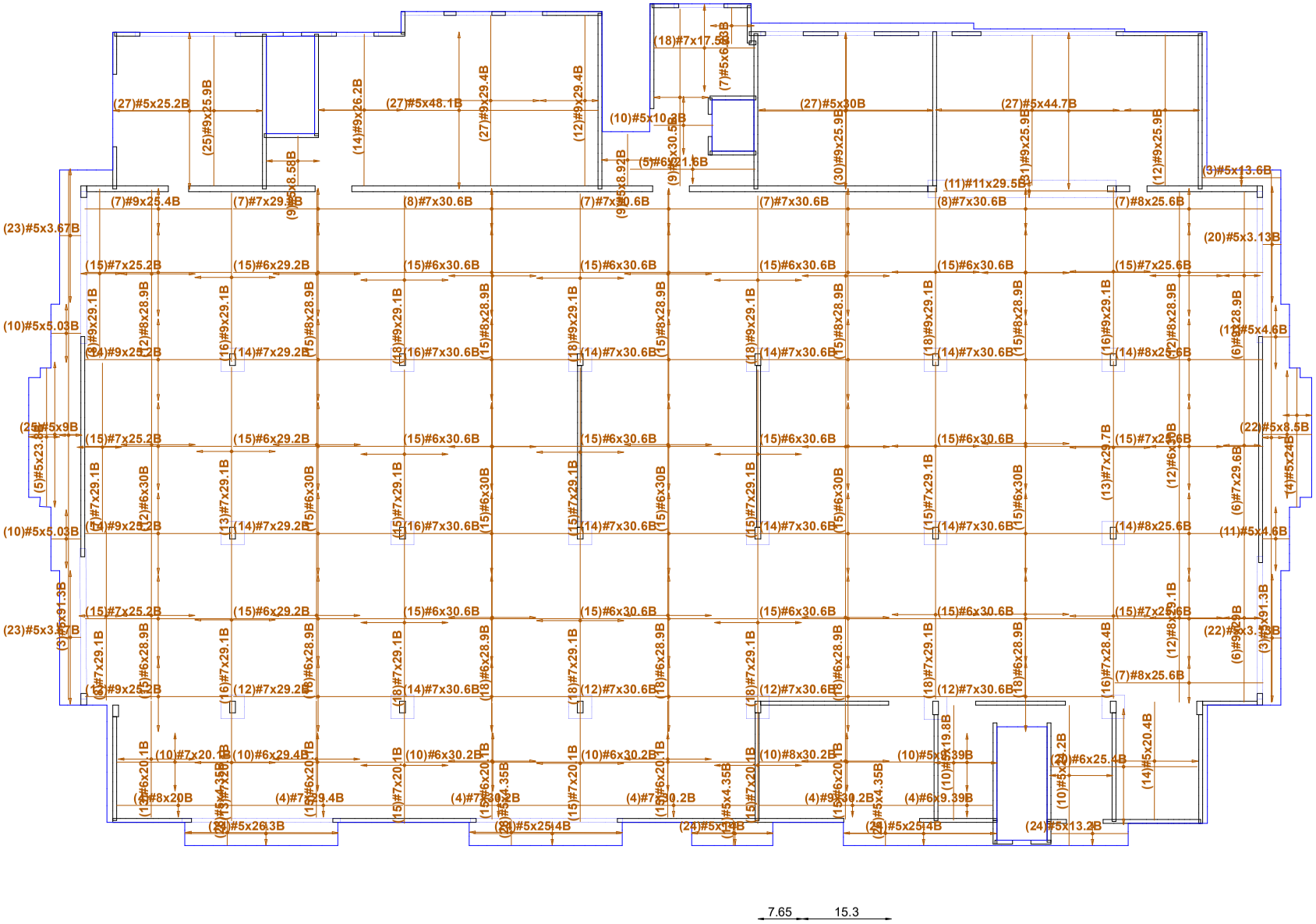

Self Weight: Std Deflection Plan

Self Weight: User Lines; User Notes; User Dimensions;
Element: Wall Elements Below; Wall Elements Above; Wall Element Outline Only; Column Elements Below; Column Elements Above; Slab Elements; Slab Element Outline Only;
Scale = 1:315
Self Weight - Vertical Deflection Plot

-0.08 -0.04 0 0.04 0.08 0.12 0.16 0.2 0.24

Min Value = -0.08405 inches @ (278.5,94.68) Max Value = 0.3051 inches @ (168,72.22)

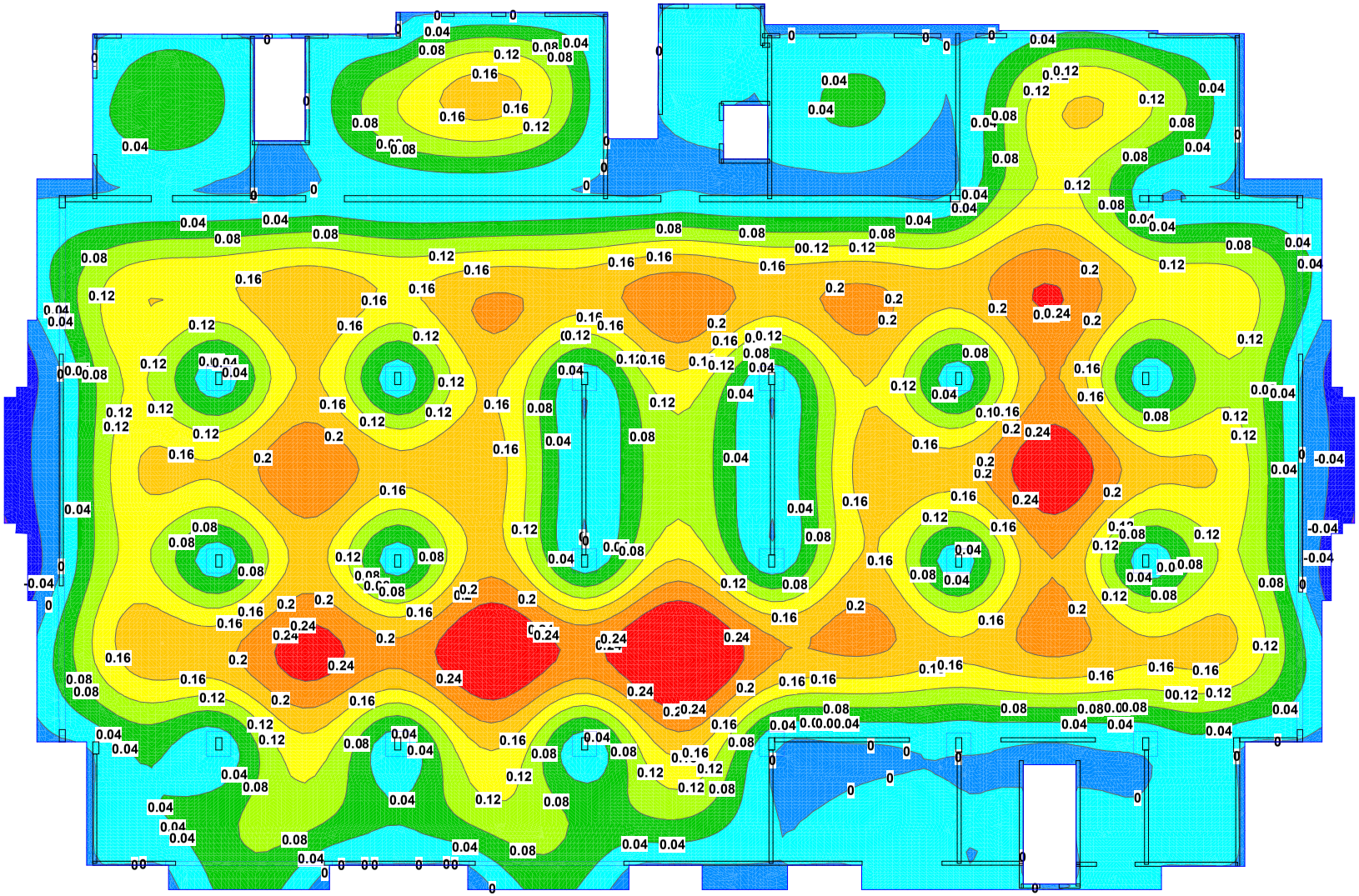

C19

Sustained Load: Std Deflection Plan

Sustained Load: User Lines; User Notes; User Dimensions;
Element: Wall Elements Below; Wall Elements Above; Wall Element Outline Only; Column Elements Below; Column Elements Above; Slab Elements; Slab Element Outline Only;
Scale = 1:315
Sustained Load - Vertical Deflection Plot

Min Value = -0.434 inches @ (278.5,94.68) Max Value = 1.64 inches @ (168,74.18)

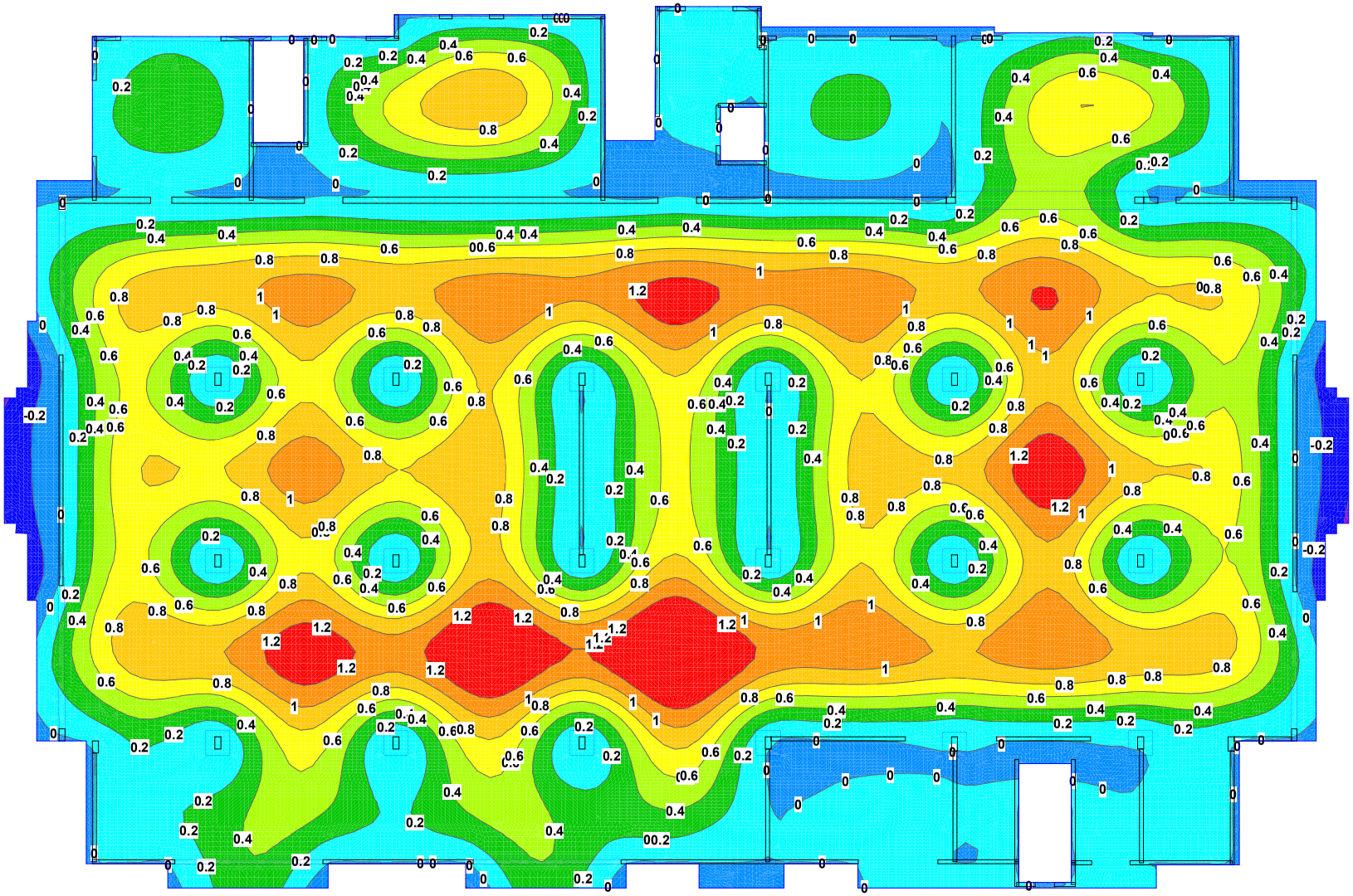

C20

Dead Load Only: Std Deflection Plan

Dead Load Only: User Lines; User Notes; User Dimensions;
Element: Wall Elements Below; Wall Elements Above; Wall Element Outline Only; Column Elements Below; Column Elements Above; Slab Elements; Slab Element Outline Only;
Scale = 1:310
Dead Load Only - Vertical Deflection Plot

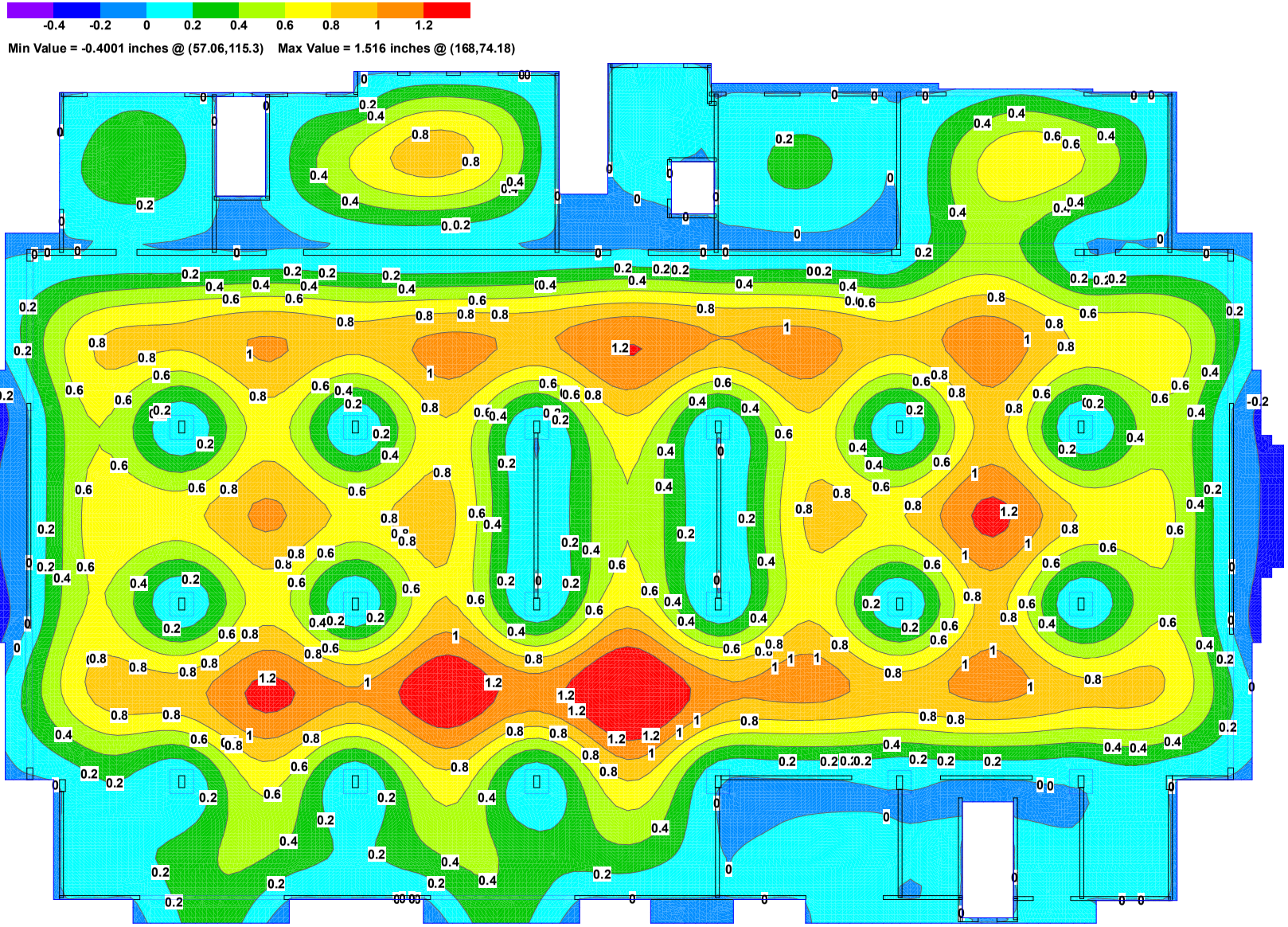

Min Value = -0.4001 inches @ (57.06,115.3) Max Value = 1.516 inches @ (168,74.18)

C21

Final Instantaneous : Std Deflection Plan

Final Instantaneous : User Lines; User Notes; User Dimensions;
Element: Wall Elements Below; Wall Elements Above; Wall Element Outline Only; Column Elements Below; Column Elements Above; Slab Elements; Slab Element Outline Only;
Scale = 1:310
Final Instantaneous - Vertical Deflection Plot

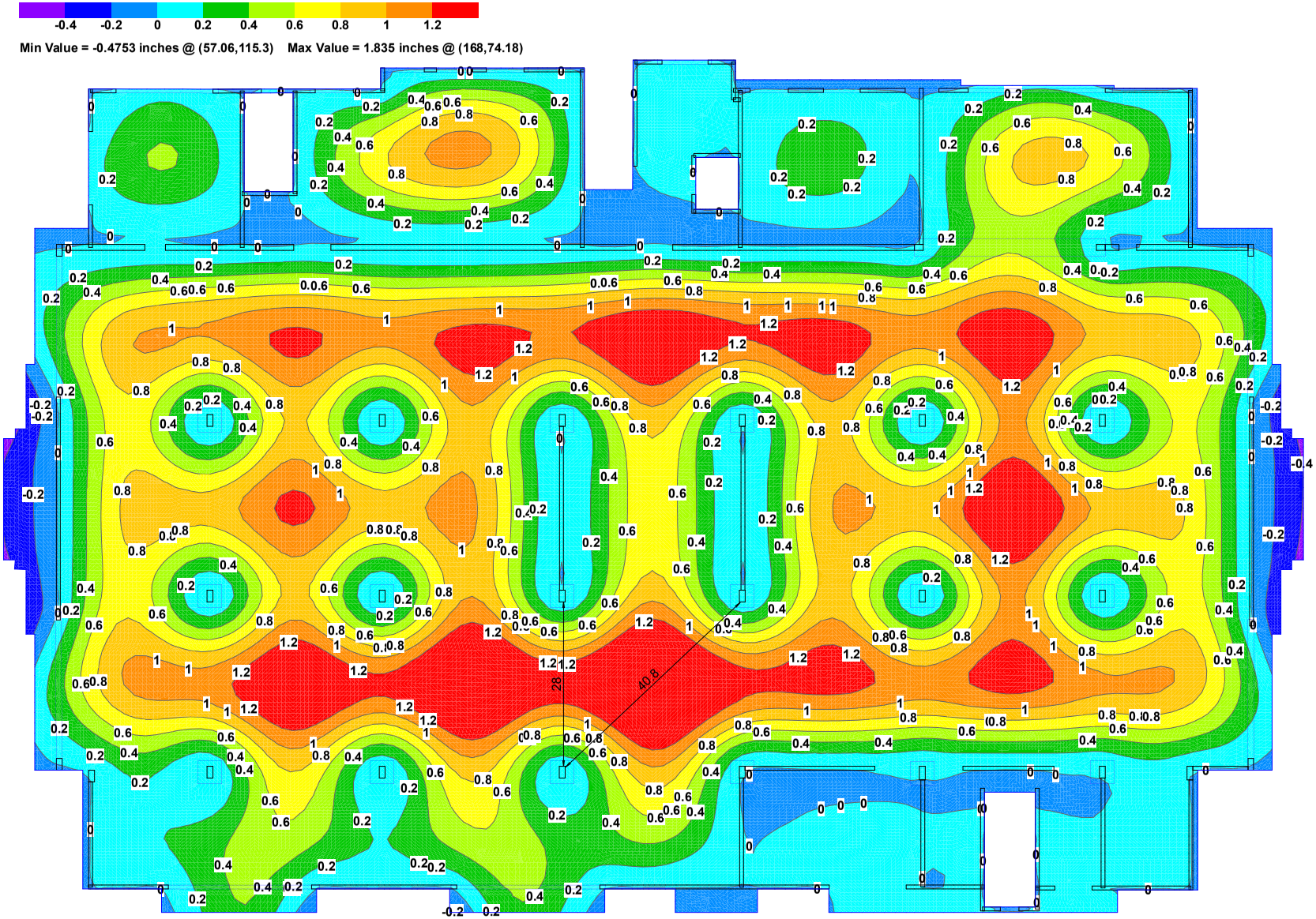

C22

Final Instantaneous : Final Instantaneous Load - Live Load Only Plan

Final Instantaneous : User Notes; User Lines; User Dimensions;
Element: Wall Elements Above; Wall Elements Below; Wall Element Outline Only; Column Elements Above; Column Elements Below; Slab Elements; Slab Element Outline Only;
Scale = 1:310
(Final Instantaneous - Dead Load Only) - Vertical Deflection Plot

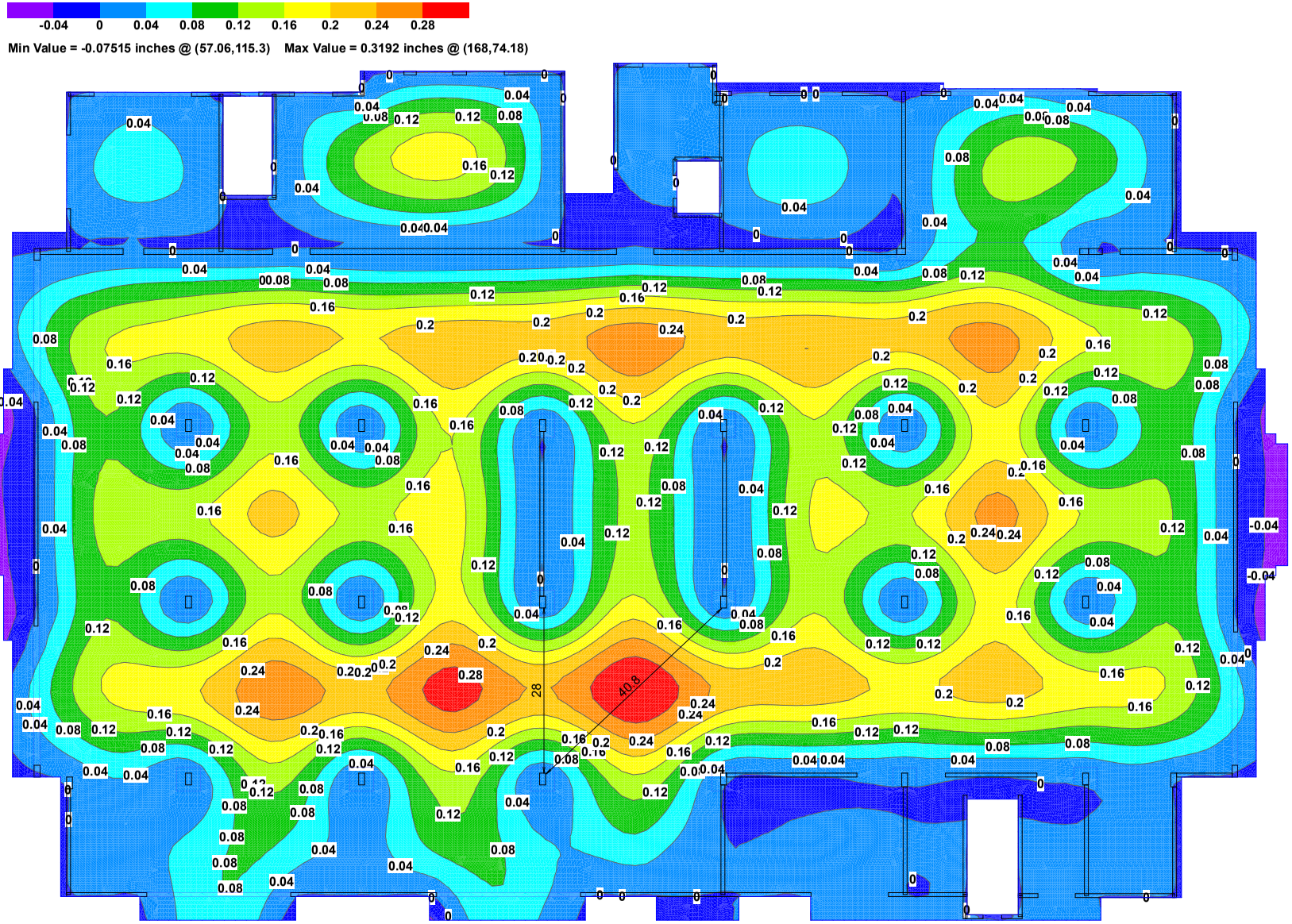

Min Value = -0.07515 inches @ (57.06,115.3) Max Value = 0.3192 inches @ (168,74.18)

Design Status: Status Plan

Design Status: User Lines; User Notes; User Dimensions; Latitude Span Designs; Longitude Span Designs; Span Design Numbers; Span Design Status; Latitude DS Designs; Longitude DS Designs; DS Design Numbers; DS Design Status; PC Designs; P
Element: Wall Elements Below; Wall Elements Above; Wall Element Outline Only; Column Elements Below; Column Elements Above; Slab Elements; Slab Element Outline Only;
Scale = 1:310

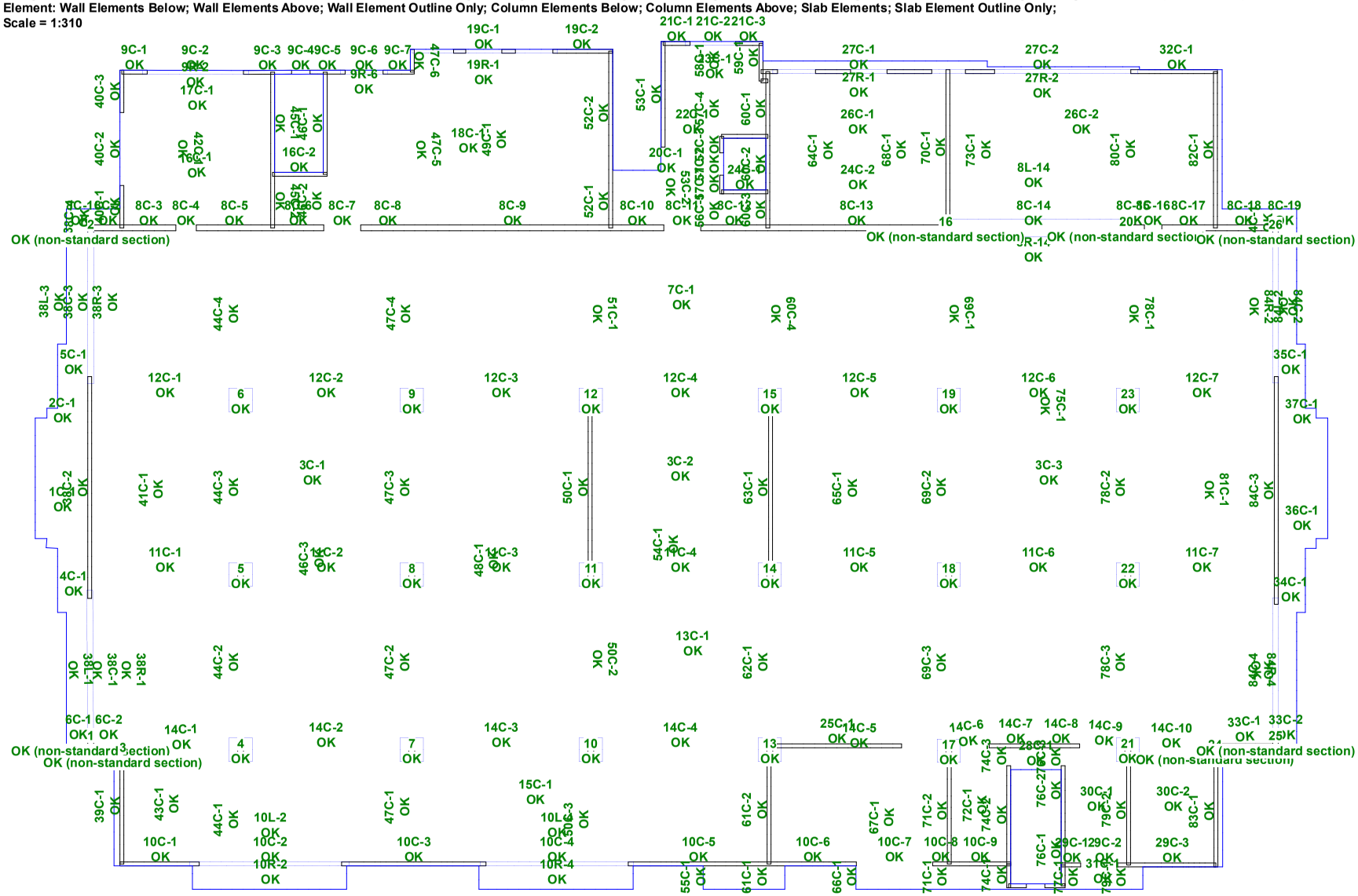

Design Status: Punching Shear Status Plan

Design Status: User Lines; User Notes; User Dimensions; PC Designs; PC Design Numbers; PC Design Status; PC Design Stress Ratios; PC Design Sections;
Element: Wall Elements Below; Wall Elements Above; Wall Element Outline Only; Column Elements Below; Column Elements Above; Slab Elements; Slab Element Outline Only;
Scale = 1:310

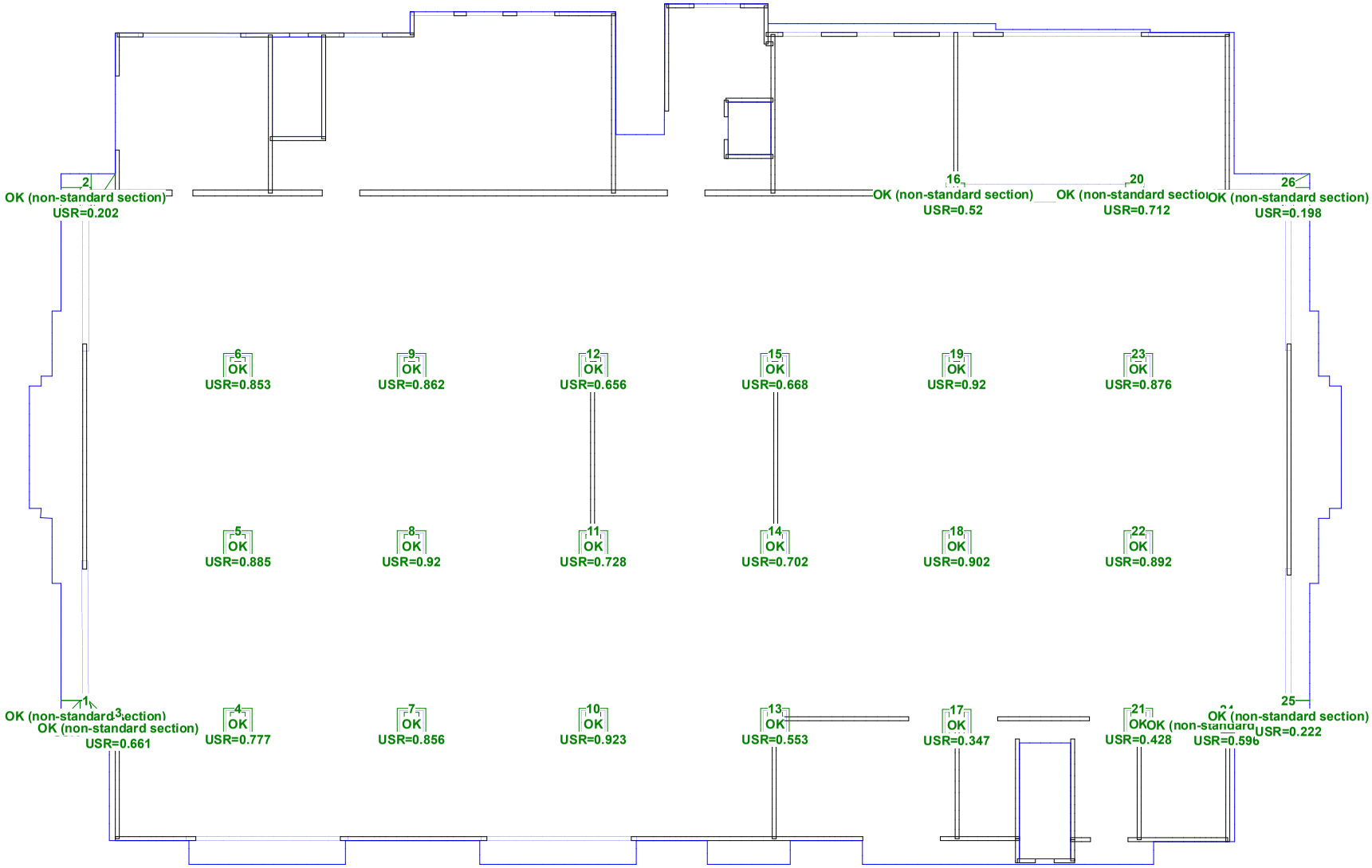

C25

CB1 12×36 (size) Length = 24ft.

T: 4-#7

B: 6-#9

Transv.: #3 @ 6" o.c.

DL = 222 psf (Included self weight of slab ~ 12" thick)

LL = 80 psf

Clear Span

Tributary Width = (25ft)(0.25ft) = 6.25ft + 5.5ft ≅ 12ft

Column Strips. Cant. span

Beam Weight = (1)(36/12)(150) = 450 plf

* Strength Design

$$\left.\begin{aligned} \Sigma DL &= (1.2)\left[(222\,psf)(12ft) + 450)\right] = 3737\,plf \\ \Sigma LL &= (1.6)(80\,psf \cdot 12ft) = 1536\,plf \end{aligned}\right\} \underline{\underline{5.28\,klf}} \text{ (Line load)}$$

Current Date: 2/9/2021 2:09 PM
Units system: English
File name: Z:\!2020 Projects\Archeon - Lancaster\Calc\!2nd Submittal\Concrete Beams\CBM1.rcb

Moments

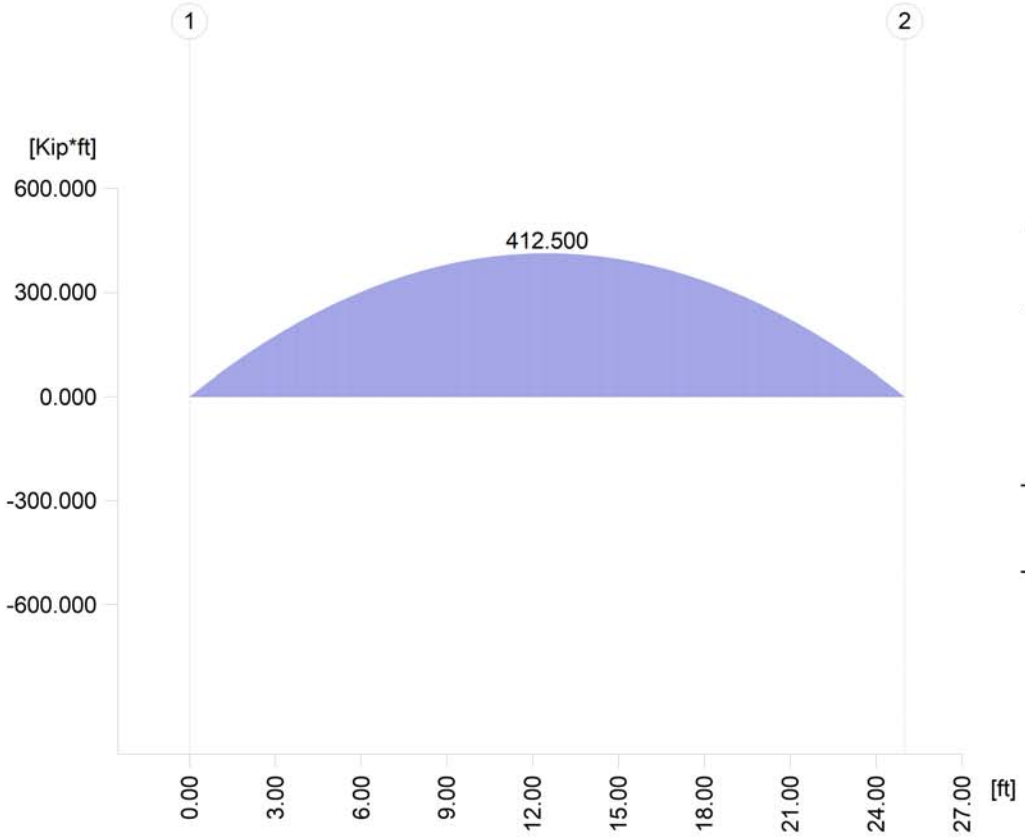

Shear

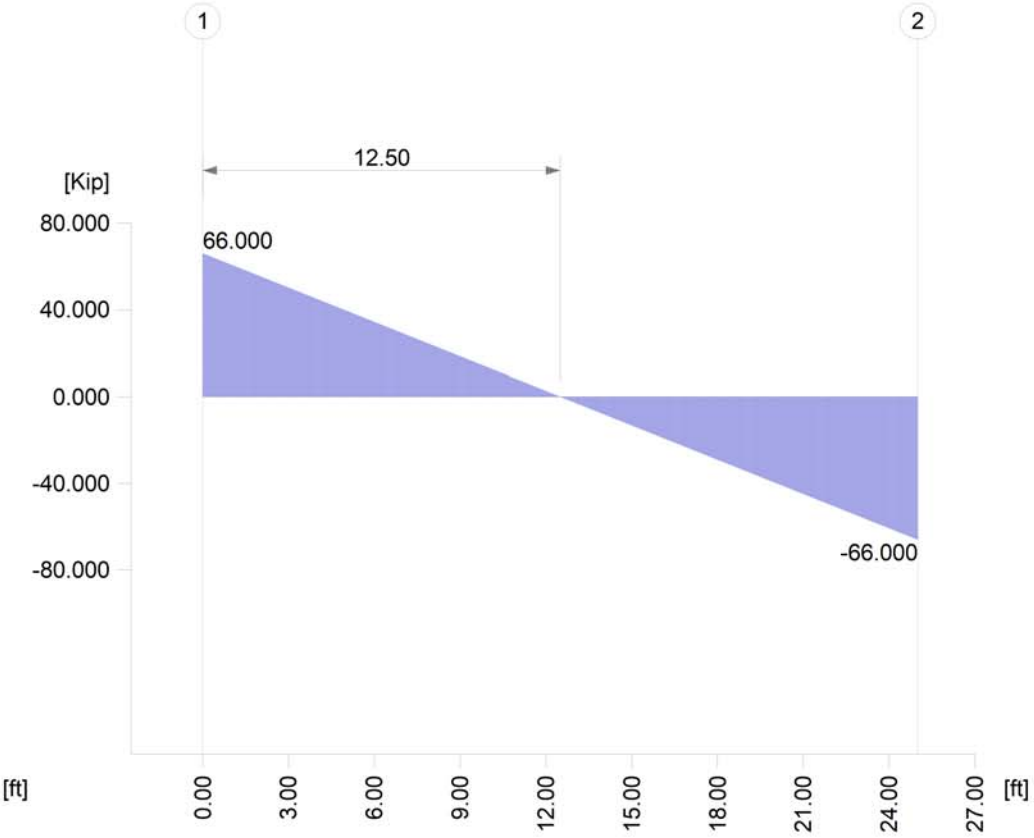

Current Date: 2/9/2021 2:10 PM
Units system: English
File name: Z:\!2020 Projects\Archeon - Lancaster\Calc\!2nd Submittal\Concrete Beams\CBM1.rcb

Design Results

Continuous Beam
Design code ACI 318-2014

GENERAL INFORMATION:

Spans:

Span	Span length [ft]	Section	Material
1	25.00	RcBeam 12x36in	C 4-60

Nodes:

Distance [ft]	Restraint	Tx	Ty	Rz
0.00	Pinned	1	1	0
25.00	Pinned	1	1	0

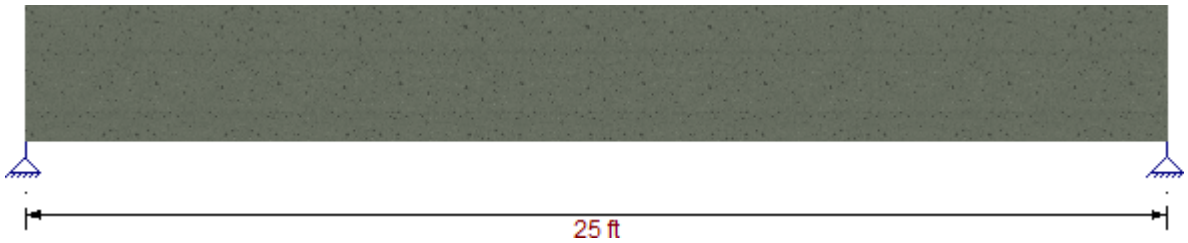

Load conditions:

Condition	Description	Comb.	Category	Duration	Self Weight
DL	Dead Load	No	DL	--	No
LL	Live Load	No	LL	--	--
S1	DL+LL	Yes	Service	--	No
D1	DL+LL	Yes	Design	--	No

Distributed loads on spans

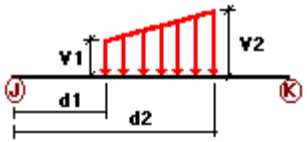

Condition	Span(s)	Dist1 [ft]	Dist2 [ft]	Val1 [Kip/ft]	Val2 [Kip/ft]
DL	1	0.00	25.00	-5.28	-5.28

Loads summary

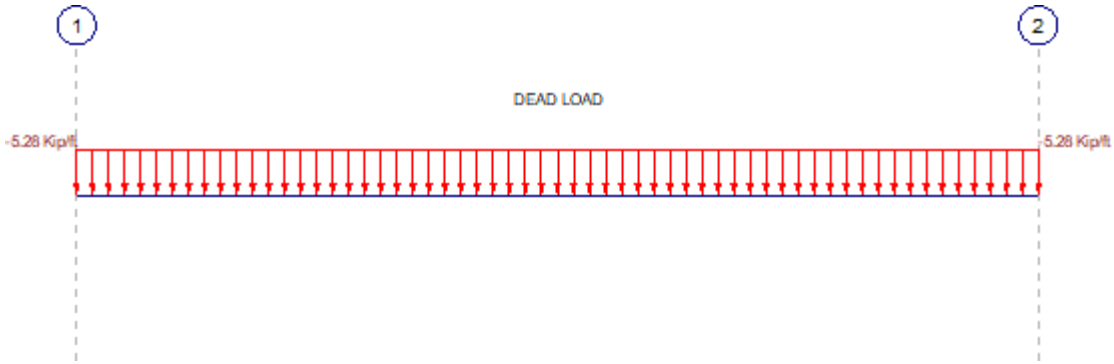

Reactions:

Nodes	condition	Rx [Kip]	Ry [Kip]	Mz [Kip*ft]
1	D1	0.00	66.00	0.00
2	D1	0.00	66.00	0.00
1	Min.	0.00	66.00	0.00
2	Min.	0.00	66.00	0.00
1	Max.	0.00	66.00	0.00
2	Max.	0.00	66.00	0.00

Member forces and inflection points

Station [%]	Condition	Distance [ft]	Shear V [Kip]	Moment M [Kip*ft]
0	D1	0.00	66.00	0.00
50	D1	12.50	0.00	412.50
100	D1	25.00	-66.00	0.00

Critical deflections

Condition	Span	Distance [ft]	@ [%]	Deflection [in]	Deflection f(L)	Allowable [in]
S1	1	12.50	50.00	0.79746	(L/376)	0.83333

Envelopes :

C30

M33 bending moment:
Moments [Kip*ft], Length [ft]

Max : 412.4371[Kip*ft] at 12.35[ft] from J

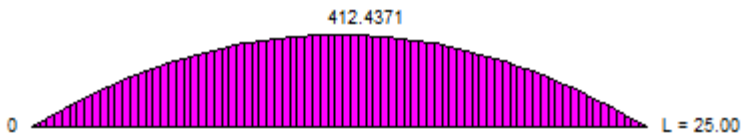

Min : 0.000[Kip*ft] at 0.00[ft] from J

V2 shear forces:
Forces [Kip], Length [ft]

Max : 66.0000[Kip] at 0.00[ft] from J

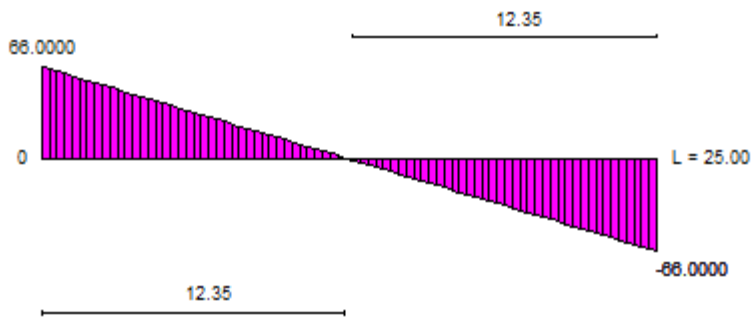

Min : -66.0000[Kip] at 25.00[ft] from J

Vertical Translation
Deflection [in], Length [ft]

Max : 0.000[in] at 0.00[ft] from J

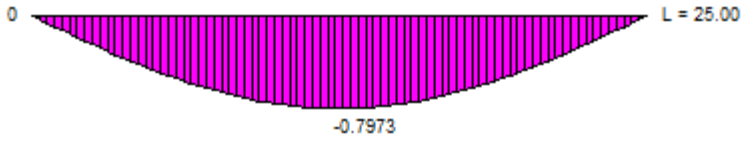

Min : -0.7973[in] at 12.35[ft] from J

DESIGN:

Status : OK

Rebar

Free cover : 1.00 [in]

Longitudinal reinforcement

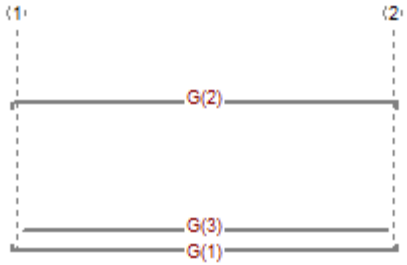

Group	Quantity	Diameter	Pos	Ref. Axis 1	Dist1 [ft]	Ref. Axis 2	Dist2 [ft]	Hook1	Hook2
1	3	#9	Bottom	1	-0.33	2	0.33	Yes	Yes
2	4	#7	Top	1	-0.33	2	0.33	Yes	Yes
3	3	#9	Bottom	2	-24.58	1	24.58	No	No

Development and splice lengths

Group	Diameter	Ld [in]	Ldh [in]	Splice L. [in]	Total L [ft]
1	#9	54.00	15.00	70.00	28.50
2	#7	54.00	12.00	71.00	27.67
3	#9	54.00	15.00	70.00	24.17

Transverse reinforcement

Span	Diameter	Quantity	@ [in]	Legs	Closed
1-2	#3	49	6.00	2	Yes

Initial spacing of stirrups:

Span	Initial S [in]	Sin lim [in]
0-1	1.00	17.50

FLEXURE

Span: 1-2 **Member No: 0**

Percentage of moment redistribution Support A = 0.00% Support B = 0.00%
Code specified max Rho: ρ_{maxtop} = 2.06% ρ_{maxbot}= 2.06%
Limit spacing between bars for cracking control: sb lim = 12.00 [in]

Positive bending moments

Station No.	Dist	d[in]	Mu[Kip*ft]	ϕ*Mn[Kip*ft]	Asreq [in2]	Asprov [in2]	ρ (%)	sb [in]	Mu/(ϕ*Mn)
1	0%	34.06	0.00	384.92	0.00	2.66	0.65	2.75	0.00
2	10%	33.00	148.43	616.05	1.02	4.63	1.17	2.75	0.24
3	20%	33.00	263.95	771.80	1.85	6.00	1.52	2.75	0.34
4	30%	33.00	346.45	771.80	2.47	6.00	1.52	2.75	0.45
5	40%	33.00	395.93	771.80	2.85	6.00	1.52	2.75	0.51
6	50%	33.00	412.50	771.80	2.98	6.00	1.52	2.75	0.53
7	60%	33.00	395.93	771.80	2.85	6.00	1.52	2.75	0.51
8	70%	33.00	346.45	771.80	2.47	6.00	1.52	2.75	0.45
9	80%	33.00	263.95	771.80	1.85	6.00	1.52	2.75	0.34
10	90%	33.00	148.43	616.05	1.02	4.63	1.17	2.75	0.24
11	100%	34.06	0.00	384.92	0.00	2.66	0.65	2.75	0.00
C	50%	33.00	412.50	771.80	2.98	6.00	1.52	2.75	0.53

Negative bending moments

Station No.	Dist	d[in]	Mu[Kip*ft]	ϕ*Mn[Kip*ft]	Asreq [in2]	Asprov [in2]	ρ (%)	sb [in]	Mu/(ϕ*Mn)
1	0%	34.19	0.00	-329.18	0.00	2.25	0.55	1.71	0.00
2	10%	34.19	0.00	-350.17	0.00	2.40	0.59	1.71	0.24
3	20%	34.19	0.00	-350.17	0.00	2.40	0.59	1.71	0.34
4	30%	34.19	0.00	-350.17	0.00	2.40	0.59	1.71	0.45
5	40%	34.19	0.00	-350.17	0.00	2.40	0.59	1.71	0.51
6	50%	34.19	0.00	-350.17	0.00	2.40	0.59	1.71	0.53
7	60%	34.19	0.00	-350.17	0.00	2.40	0.59	1.71	0.51
8	70%	34.19	0.00	-350.17	0.00	2.40	0.59	1.71	0.45
9	80%	34.19	0.00	-350.17	0.00	2.40	0.59	1.71	0.34
10	90%	34.19	0.00	-350.17	0.00	2.40	0.59	1.71	0.24
11	100%	34.19	0.00	-329.18	0.00	2.25	0.55	1.71	0.00
C	50%	34.19	0.00	-350.17	0.00	2.40	0.59	1.71	0.53

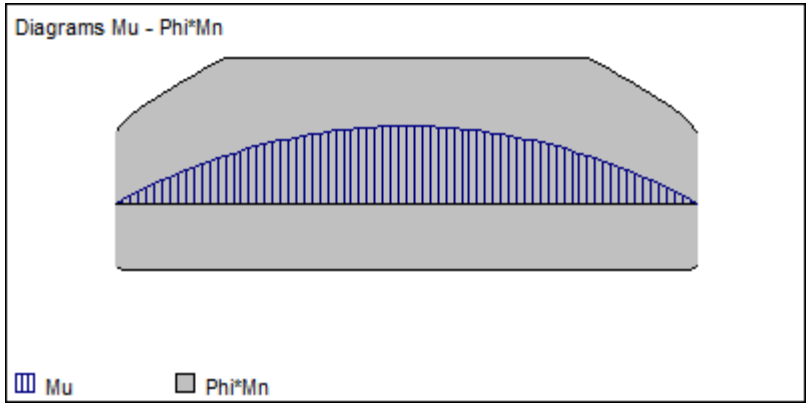

SHEAR AND TORSION

Span: 1-2 **Member No: 0**

Station		Stirrups		Spc prov	Spc lim	Tu	ϕ*Tn	Al	Vu	Vs	Vc	ϕ*Vn	Vu/(ϕ*Vn)
No.	Dist	Diam	VCT	[in]	[in]	[Kip*ft]	[Kip*ft]	[in2]	[Kip]	[Kip]	[Kip]	[Kip]	
1	0%	#3	V	6.00	17.03	0.00	29.94	0.00	50.50	74.93	51.70	94.98	0.53
2	10%	#3	V	6.00	16.50	0.00	28.84	0.00	50.50	72.59	50.09	92.01	0.55
3	20%	#3	V	6.00	16.50	0.00	36.41	0.00	39.60	72.59	50.09	92.01	0.43
4	30%	#3	V	6.00	16.50	0.00	37.83	0.00	26.40	72.59	50.09	92.01	0.29
5	40%	#3		6.00	16.50	0.00	37.83	0.00	13.20	72.59	50.09	92.01	0.14
6	50%	#3		6.00	16.50	0.00	37.83	0.00	0.00	72.59	50.09	92.01	0.00
7	60%	#3		6.00	16.50	0.00	37.83	0.00	13.20	72.59	50.09	92.01	0.14
8	70%	#3	V	6.00	16.50	0.00	37.83	0.00	26.40	72.59	50.09	92.01	0.29
9	80%	#3	V	6.00	16.50	0.00	36.41	0.00	39.60	72.59	50.09	92.01	0.43
10	90%	#3	V	6.00	16.50	0.00	28.84	0.00	50.50	72.59	50.09	92.01	0.55
11	100%	#3	V	6.00	17.03	0.00	29.94	0.00	50.50	74.93	51.70	94.98	0.53
C	1%	#3	V	6.00	16.50	0.00	28.84	0.00	50.50	72.59	50.09	92.01	0.55

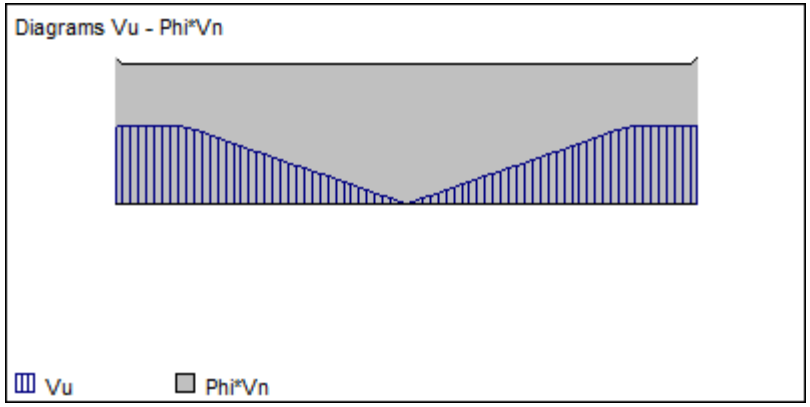

Notes

* Only the design bending forces (Mu), shear forces (Vu) and torsion moments (Tu) are considered in the design.
* Values shown in red are not in compliance with a provision of the code
* The positive and negative flexural reinforcement includes the longitudinal reinforcement required to resist torsion. Refer to the note below on the VCT column to determine when torsion and compression bars are provided. The longitudinal reinforcement area considers the minimum area required by Code (10.5).
* When the moments diagram increases in the same direction of the development length of the bars, the bars will not contribute to the member strength for a Code specified distance equal to max(12*db,d).

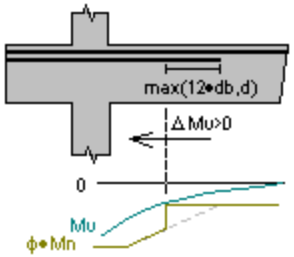

* If the section at which member flexural strength is being calculated is within the development length of a group of bars, the bars will contribute to the bending capacity an amount proportional to their actual length / their full development length.
* The transverse reinforcement is ordered from left to right.
* The program does not consider ACI318-14 section 7.7.3.8.3 whereby the bar diameter is limited according to the location of the bar cut-off.
* Asprov is the provided reinforcement, considering the reduction due to the development length as described previously.
* "C" shows the span critical station.
* Ld,Ldh = Development length of each bar. If the bar ends with a hook, it considers the Ldh length.
* Splice lengths shown are not reduced by the factor Asreq/Asprov.
* sb = Free distance between top or bottom bars corresponding to the layer closest to the extreme face of the beam (layer1). It is not calculated when there is only one bar.
* Stirrups VCT = Flag that determines if stirrups are required to resist shear forces (V), torsion (T) or to confine the the longitudinal compression bars from buckling (C).
* Closed = Flag that indicates if the stirrups are closed (yes) or open (no).
* Mu/(ϕ*Mn) = Critical strength ratio for the station. If the value is in red, it is larger than 1.0
* Al = Total additional longitudinal reinforcement required by torsion.
* Spa = stirrup spacing provided by the user.
* Spa lim = spacing limits due to geometry. (9.7.6.2.2, 9.7.6.5.2, 18.4.2.4, 18.6.4.7)

CB2

8 x 36 (size) Length = 24ft

T: 2 - #6

B: 2 - #8

Transv.: #3 @ 8" o.c

DL = 222 psf

LL = 80 psf

Tributary Width = 18.25ft (0.25) = 4.56ft + 4ft ≅ 9 ft

Cant. Slab

Beam Self weight = (8/12)(36/12)(150) = 300 plf

* Strength Design

$\Sigma DL = (1.2)[(222psf)(9ft) + 300)] = 2758 plf$

$\Sigma LL = (1.6)(80psf \cdot 9) = 1152 plf$

3.91 x 1f (line load)

Current Date: 2/9/2021 2:11 PM
Units system: English
File name: Z:\!2020 Projects\Archeon - Lancaster\Calc\!2nd Submittal\Concrete Beams\CBM2.rcb

Moments

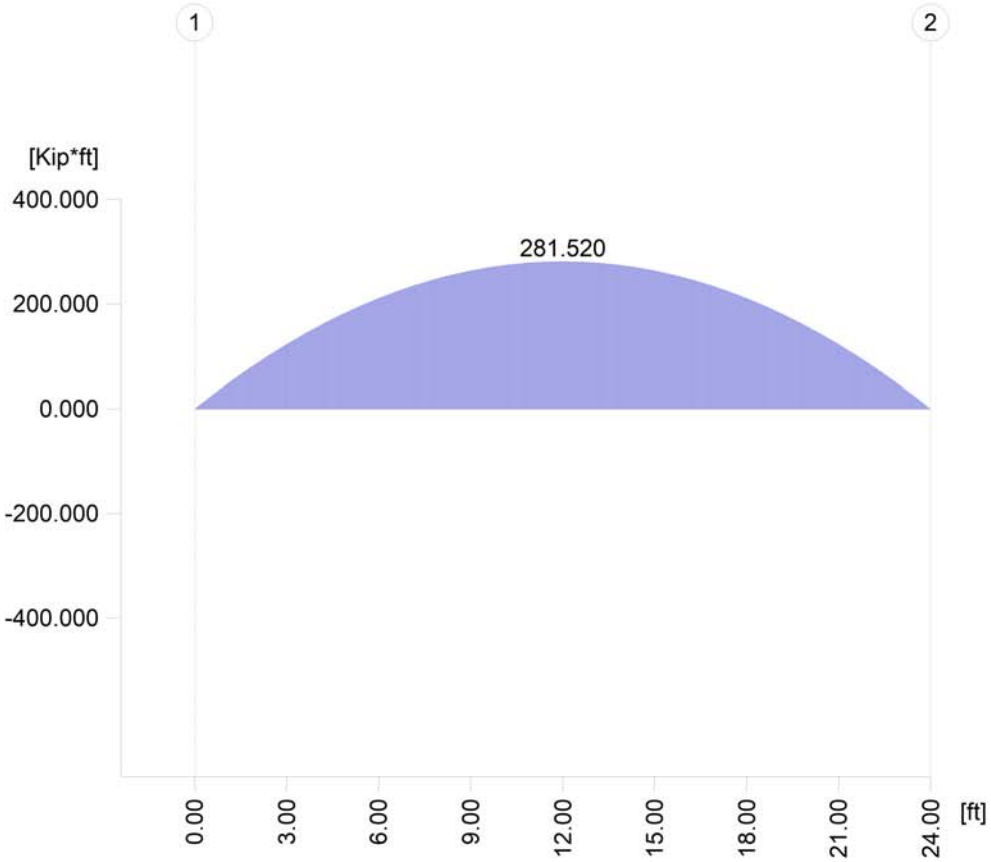

Shear

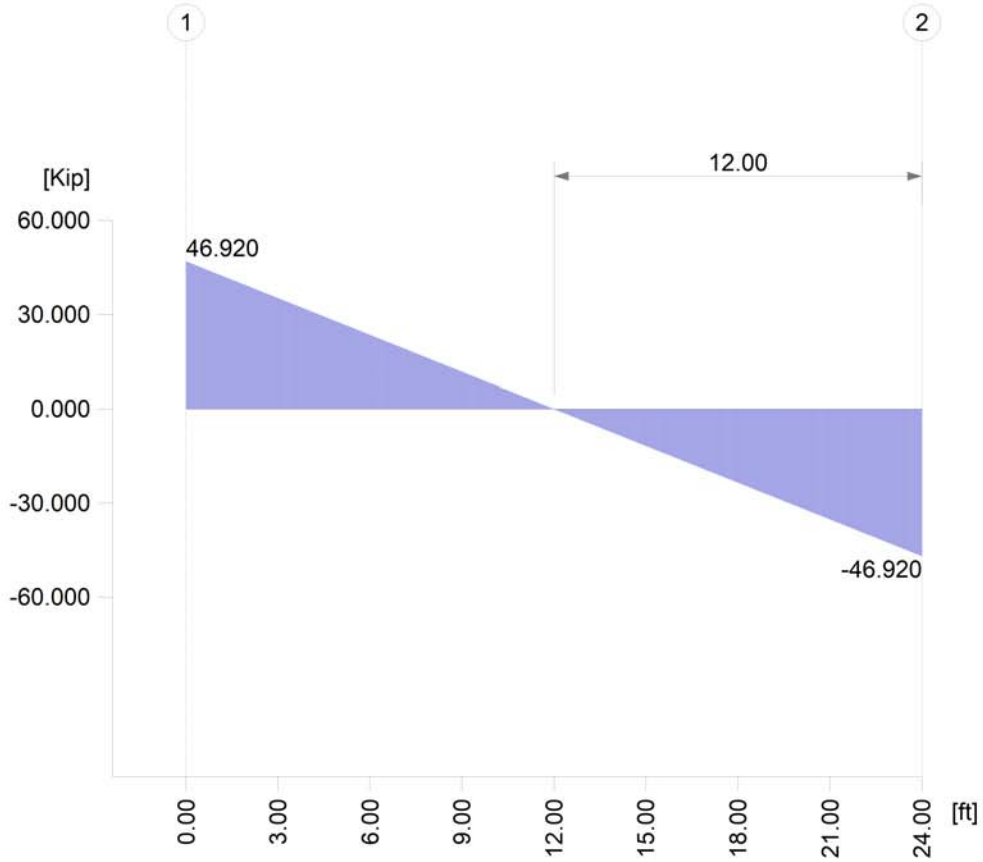

Current Date: 2/9/2021 2:11 PM
Units system: English
File name: Z:\!2020 Projects\Archeon - Lancaster\Calc\!2nd Submittal\Concrete Beams\CBM2.rcb

Design Results

Continuous Beam
Design code ACI 318-2014

GENERAL INFORMATION:

Spans:

Span	Span length [ft]	Section	Material
1	24.00	RcBeam 8x32in	C 4-60

Nodes:

Distance [ft]	Restraint	Tx	Ty	Rz
0.00	Pinned	1	1	0
24.00	Pinned	1	1	0

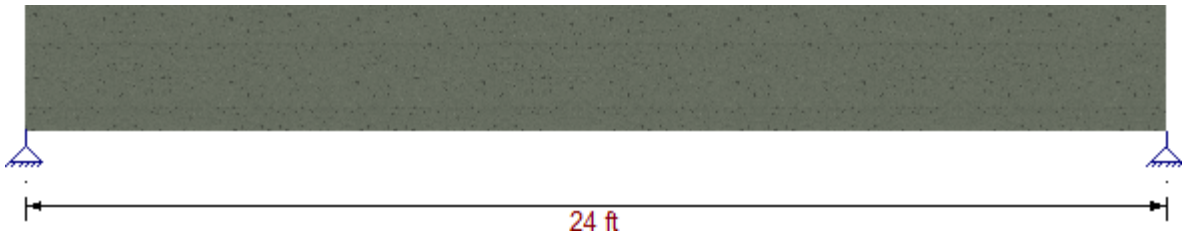

Load conditions:

Condition	Description	Comb.	Category	Duration	Self Weight
DL	Dead Load	No	DL	--	No
LL	Live Load	No	LL	--	--
S1	DL+LL	Yes	Service	--	No
D1	DL+LL	Yes	Design	--	No

Distributed loads on spans

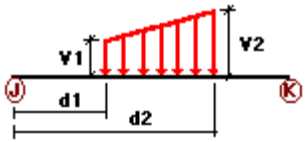

Condition	Span(s)	Dist1 [ft]	Dist2 [ft]	Val1 [Kip/ft]	Val2 [Kip/ft]
DL	1	0.00	24.00	-3.91	-3.91

Loads summary

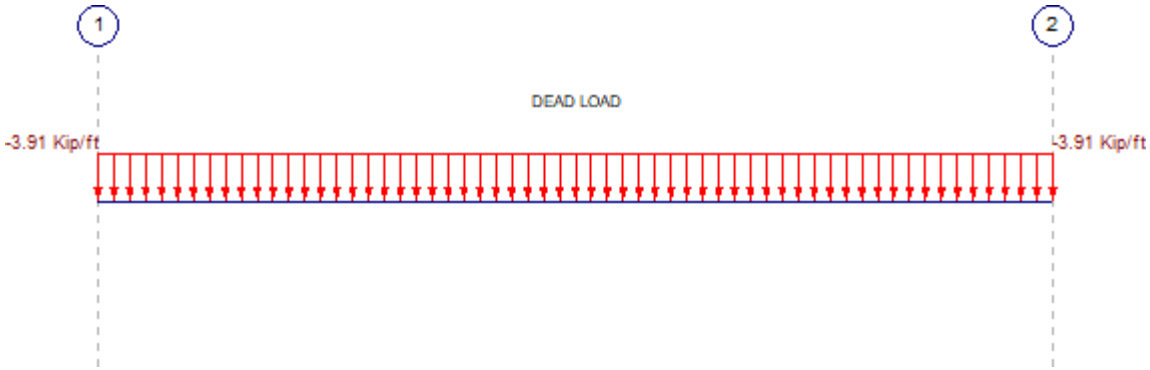

Reactions:

Nodes	condition	Rx [Kip]	Ry [Kip]	Mz [Kip*ft]
1	D1	0.00	46.92	0.00
2	D1	0.00	46.92	0.00
1	Min.	0.00	46.92	0.00
2	Min.	0.00	46.92	0.00
1	Max.	0.00	46.92	0.00
2	Max.	0.00	46.92	0.00

Member forces and inflection points

Station [%]	Condition	Distance [ft]	Shear V [Kip]	Moment M [Kip*ft]
0	D1	0.00	46.92	0.00
50	D1	12.00	0.00	281.52
100	D1	24.00	-46.92	0.00

Critical deflections

Condition	Span	Distance [ft]	@ [%]	Deflection [in]	Deflection f(L)	Allowable [in]
S1	1	12.00	50.00	1.06948	(L/269)	0.80000

Envelopes :

M33 bending moment:
Moments [Kip*ft], Length [ft]

Max : 281.4771[Kip*ft] at 12.15[ft] from J

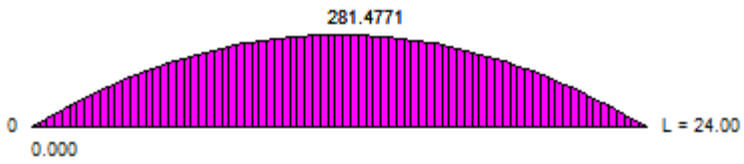

Min : 0.000[Kip*ft] at 0.00[ft] from J

V2 shear forces:
Forces [Kip], Length [ft]

Max : 46.9200[Kip] at 0.00[ft] from J

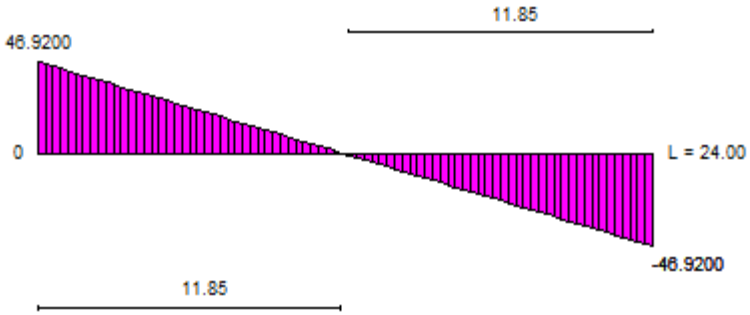

Min : -46.9200[Kip] at 24.00[ft] from J

Vertical Translation
Deflection [in], Length [ft]

Max : 0.000[in] at 0.00[ft] from J

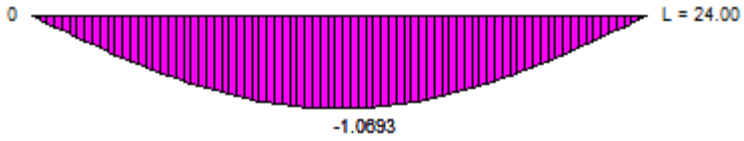

Min : -1.0693[in] at 12.15[ft] from J

DESIGN:

Status : OK

Rebar

Free cover : 1.00 [in]

Longitudinal reinforcement

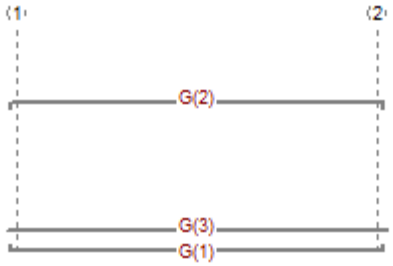

Group	Quantity	Diameter	Pos	Ref. Axis 1	Dist1 [ft]	Ref. Axis 2	Dist2 [ft]	Hook1	Hook2
1	2	#9	Bottom	1	-0.33	2	0.33	Yes	Yes
2	2	#8	Top	1	-0.33	2	0.33	Yes	Yes
3	2	#9	Bottom	2	-24.58	1	24.58	No	No

Development and splice lengths

Group	Diameter	Ld [in]	Ldh [in]	Splice L. [in]	Total L [ft]
1	#9	54.00	15.00	70.00	27.50
2	#8	62.00	14.00	81.00	26.92
3	#9	54.00	15.00	70.00	25.17

Transverse reinforcement

Span	Diameter	Quantity	@ [in]	Legs	Closed
1-2	#3	36	8.00	2	Yes

Initial spacing of stirrups:

Span	Initial S [in]	Sin lim [in]
0-1	0.00	15.50

FLEXURE

Span: 1-2 **Member No: 0**

Percentage of moment redistribution Support A = 0.00% Support B = 0.00%
Code specified max Rho: ρ_{maxtop} = 2.06% ρ_{maxbot}= 2.06%
Limit spacing between bars for cracking control: sb lim = 12.00 [in]

Positive bending moments

Station No.	Dist	d[in]	Mu[Kip*ft]	ϕ*Mn[Kip*ft]	Asreq [in2]	Asprov [in2]	ρ (%)	sb [in]	Mu/(ϕ*Mn)
1	0%	29.00	0.00	265.76	0.00	2.22	0.96	2.62	0.00
2	10%	29.00	101.31	394.71	0.80	3.49	1.50	2.62	0.26
3	20%	29.00	180.12	442.53	1.46	4.00	1.72	2.62	0.41
4	30%	29.00	236.42	442.53	1.96	4.00	1.72	2.62	0.53
5	40%	29.00	270.22	442.53	2.27	4.00	1.72	2.62	0.61
6	50%	29.00	281.52	442.53	2.37	4.00	1.72	2.62	0.64
7	60%	29.00	270.22	442.53	2.27	4.00	1.72	2.62	0.61
8	70%	29.00	236.42	442.53	1.96	4.00	1.72	2.62	0.53
9	80%	29.00	180.12	442.53	1.46	4.00	1.72	2.62	0.41
10	90%	29.00	101.31	394.71	0.80	3.49	1.50	2.62	0.26
11	100%	29.00	0.00	265.76	0.00	2.22	0.96	2.62	0.00
C	50%	29.00	281.52	442.53	2.37	4.00	1.72	2.62	0.64

Negative bending moments

Station No.	Dist	d[in]	Mu[Kip*ft]	ϕ*Mn[Kip*ft]	Asreq [in2]	Asprov [in2]	ρ (%)	sb [in]	Mu/(ϕ*Mn)
1	0%	30.13	0.00	-184.60	0.00	1.44	0.60	2.75	0.00
2	10%	30.13	0.00	-201.80	0.00	1.58	0.66	2.75	0.26
3	20%	30.13	0.00	-201.80	0.00	1.58	0.66	2.75	0.41
4	30%	30.13	0.00	-201.80	0.00	1.58	0.66	2.75	0.53
5	40%	30.13	0.00	-201.80	0.00	1.58	0.66	2.75	0.61
6	50%	30.13	0.00	-201.80	0.00	1.58	0.66	2.75	0.64
7	60%	30.13	0.00	-201.80	0.00	1.58	0.66	2.75	0.61
8	70%	30.13	0.00	-201.80	0.00	1.58	0.66	2.75	0.53
9	80%	30.13	0.00	-201.80	0.00	1.58	0.66	2.75	0.41
10	90%	30.13	0.00	-201.80	0.00	1.58	0.66	2.75	0.26
11	100%	30.13	0.00	-184.60	0.00	1.44	0.60	2.75	0.00
C	50%	30.13	0.00	-201.80	0.00	1.58	0.66	2.75	0.64

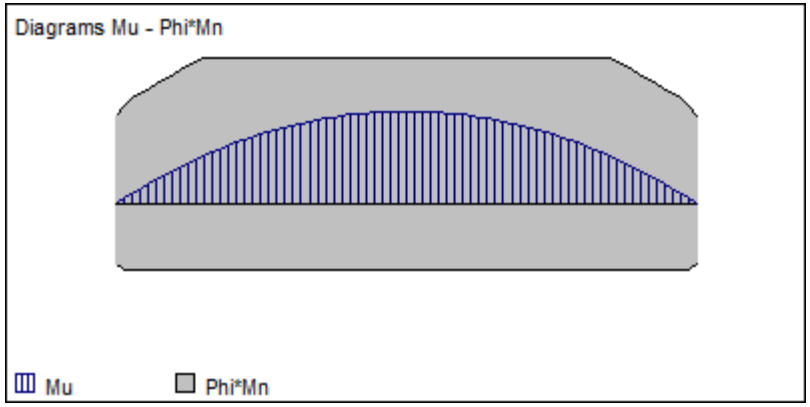

SHEAR AND TORSION

Span: 1-2 **Member No: 0**

Station		Stirrups		Spc prov	Spc lim	Tu	ϕ*Tn	Al	Vu	Vs	Vc	ϕ*Vn	Vu/(ϕ*Vn)
No.	Dist	Diam	VCT	[in]	[in]	[Kip*ft]	[Kip*ft]	[in2]	[Kip]	[Kip]	[Kip]	[Kip]	
1	0%	#3	V	8.00	15.06	0.00	9.02	0.00	37.13	49.71	30.48	60.14	0.62
2	10%	#3	V	8.00	14.50	0.00	8.50	0.00	37.00	47.85	29.34	57.89	0.64
3	20%	#3	V	8.00	14.50	0.00	12.11	0.00	28.15	47.85	29.34	57.89	0.49
4	30%	#3	V	8.00	14.50	0.00	14.61	0.00	18.77	47.85	29.34	57.89	0.32
5	40%	#3		8.00	14.50	0.00	14.61	0.00	9.38	47.85	29.34	57.89	0.16
6	50%	#3		8.00	14.50	0.00	14.61	0.00	0.00	47.85	29.34	57.89	0.00
7	60%	#3		8.00	14.50	0.00	14.61	0.00	9.38	47.85	29.34	57.89	0.16
8	70%	#3	V	8.00	14.50	0.00	14.61	0.00	18.77	47.85	29.34	57.89	0.32
9	80%	#3	V	8.00	14.50	0.00	12.11	0.00	28.15	47.85	29.34	57.89	0.49
10	90%	#3	V	8.00	14.50	0.00	8.50	0.00	37.00	47.85	29.34	57.89	0.64
11	100%	#3	V	8.00	14.50	0.00	8.45	0.00	37.13	47.85	29.34	57.89	0.64
C	1%	#3	V	8.00	14.50	0.00	8.45	0.00	37.13	47.85	29.34	57.89	0.64

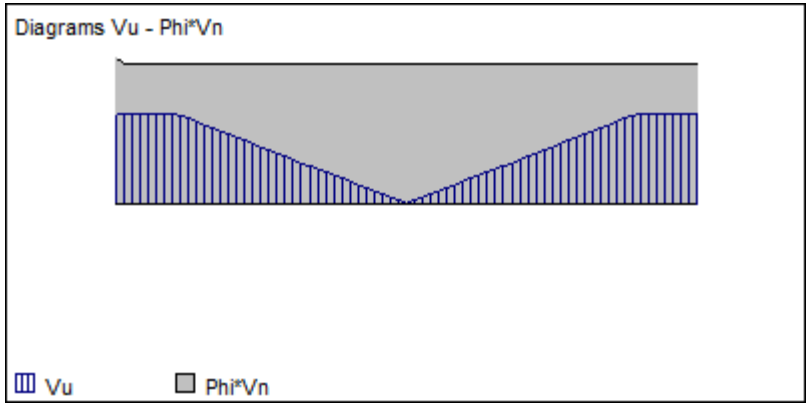

Notes

* Only the design bending forces (Mu), shear forces (Vu) and torsion moments (Tu) are considered in the design.
* Values shown in red are not in compliance with a provision of the code
* The positive and negative flexural reinforcement includes the longitudinal reinforcement required to resist torsion. Refer to the note below on the VCT column to determine when torsion and compression bars are provided. The longitudinal reinforcement area considers the minimum area required by Code (10.5).
* When the moments diagram increases in the same direction of the development length of the bars, the bars will not contribute to the member strength for a Code specified distance equal to max(12*db,d).

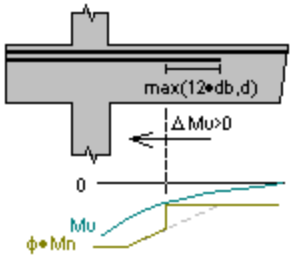

* If the section at which member flexural strength is being calculated is within the development length of a group of bars, the bars will contribute to the bending capacity an amount proportional to their actual length / their full development length.
* The transverse reinforcement is ordered from left to right.
* The program does not consider ACI318-14 section 7.7.3.8.3 whereby the bar diameter is limited according to the location of the bar cut-off.
* Asprov is the provided reinforcement, considering the reduction due to the development length as described previously.
* "C" shows the span critical station.
* Ld,Ldh = Development length of each bar. If the bar ends with a hook, it considers the Ldh length.
* Splice lengths shown are not reduced by the factor Asreq/Asprov.
* sb = Free distance between top or bottom bars corresponding to the layer closest to the extreme face of the beam (layer1). It is not calculated when there is only one bar.
* Stirrups VCT = Flag that determines if stirrups are required to resist shear forces (V), torsion (T) or to confine the the longitudinal compression bars from buckling (C).
* Closed = Flag that indicates if the stirrups are closed (yes) or open (no).
* Mu/(ϕ*Mn) = Critical strength ratio for the station. If the value is in red, it is larger than 1.0
* Al = Total additional longitudinal reinforcement required by torsion.
* Spa = stirrup spacing provided by the user.
* Spa lim = spacing limits due to geometry. (9.7.6.2.2, 9.7.6.5.2, 18.4.2.4, 18.6.4.7)

CB2A 8×24 (size) length = 8ft.

T: 2-#6

B: 2-#8

Transv.: #3@8" o.c.

DL = 222 psf

LL = 80 psf

Tributary Width = 3ft

Beam Self weight = 300 plf

* Strength Design

$$\left.\begin{aligned} \Sigma DL &= (1.2)\left[(222\,psf)(3ft) + 300\,plf\right] = 1160\,plf \\ \Sigma LL &= (1.6)(80 \cdot 3ft) = 384\,plf \end{aligned}\right\} \underline{\underline{1.55\,klf}}$$

Line load

Moments

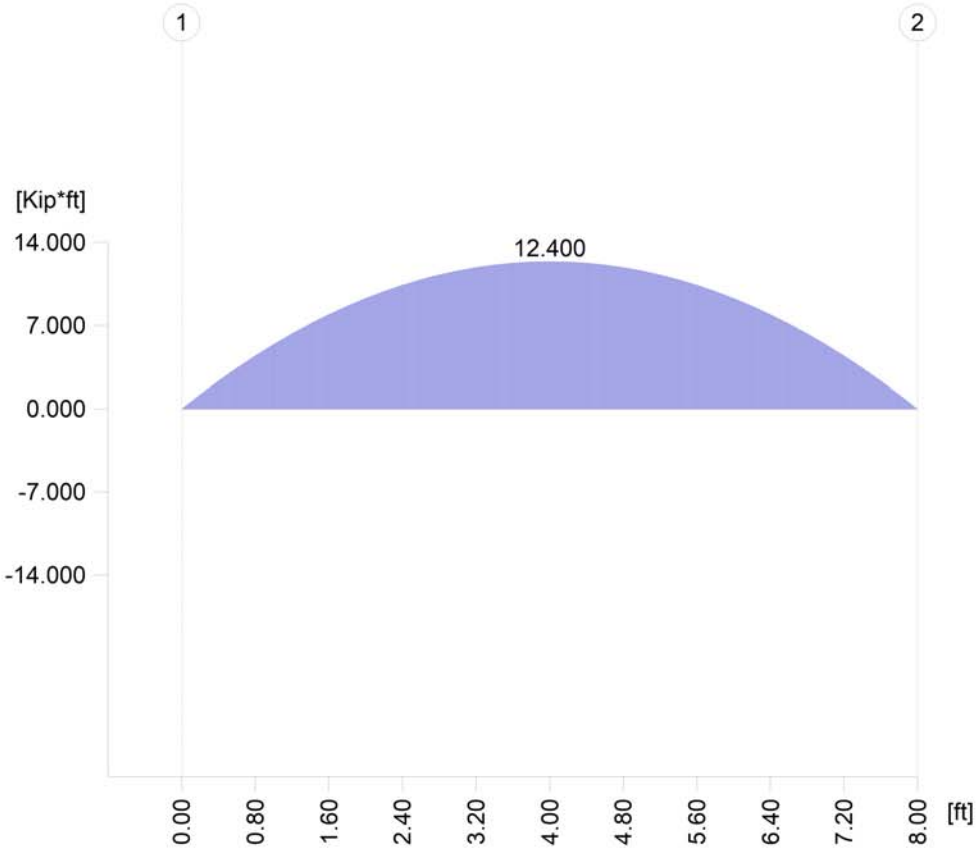

Shear

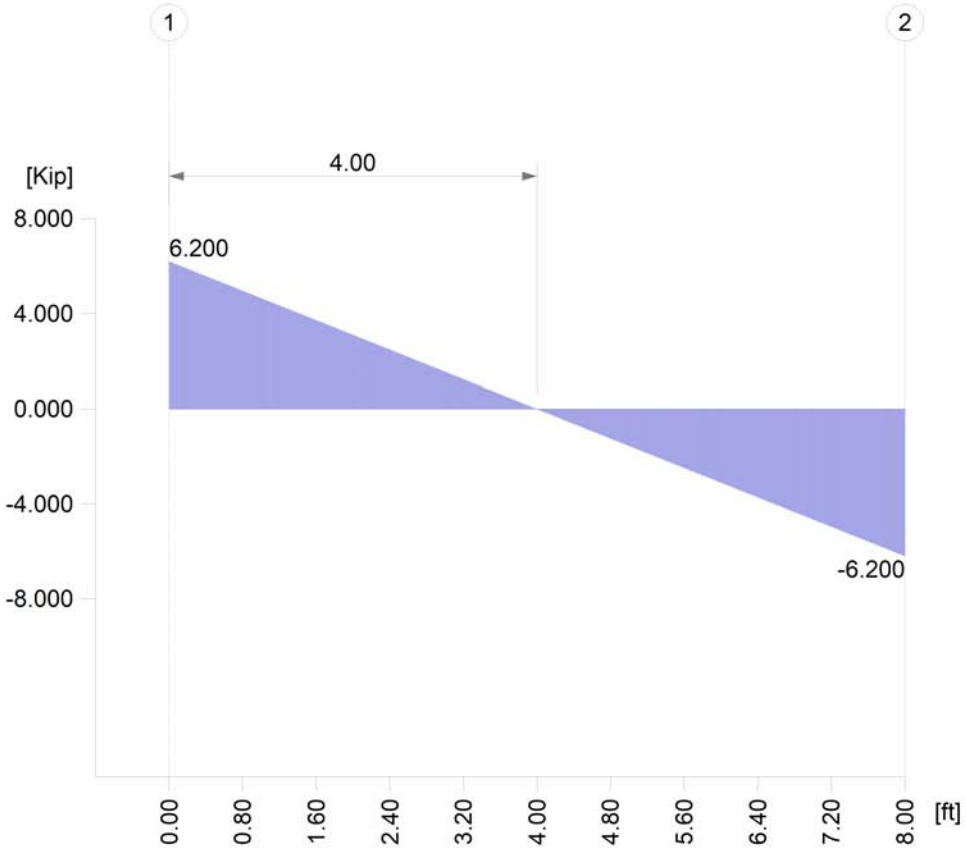

Current Date: 2/9/2021 2:12 PM
Units system: English
File name: Z:\!2020 Projects\Archeon - Lancaster\Calc\!2nd Submittal\Concrete Beams\CBM2A.rcb

Design Results

Continuous Beam
Design code ACI 318-2014

GENERAL INFORMATION:

Spans:

Span	Span length [ft]	Section	Material
1	8.00	RcBeam 8x24in	C 4-60

Nodes:

Distance [ft]	Restraint	Tx	Ty	Rz
0.00	Pinned	1	1	0
8.00	Pinned	1	1	0

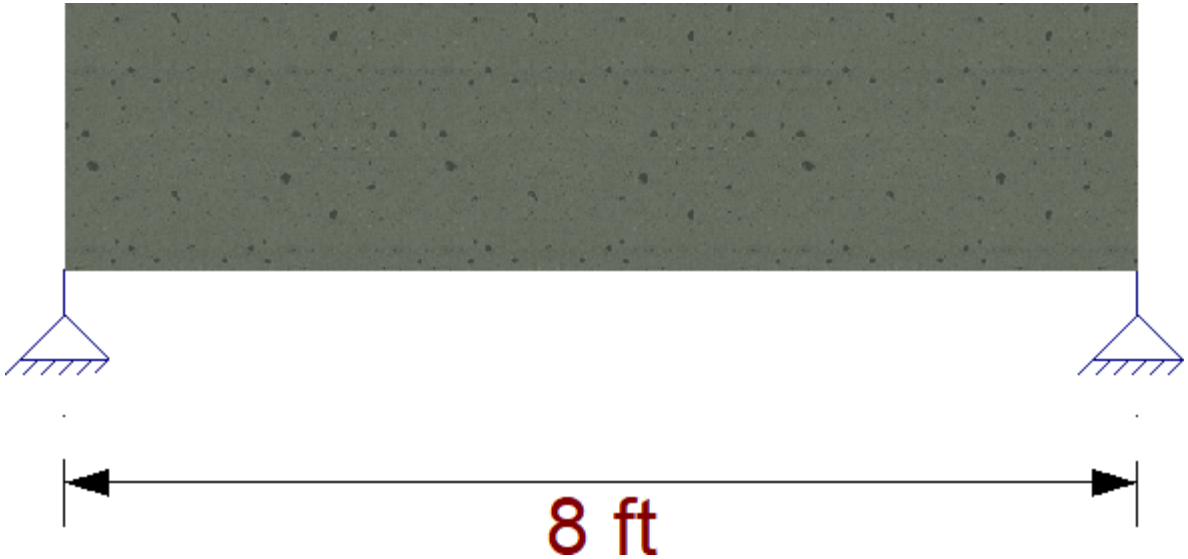

Load conditions:

Condition	Description	Comb.	Category	Duration	Self Weight
DL	Dead Load	No	DL	--	No
LL	Live Load	No	LL	--	--
S1	DL+LL	Yes	Service	--	No
D1	DL+LL	Yes	Design	--	No

Distributed loads on spans

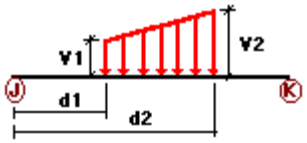

Condition	Span(s)	Dist1 [ft]	Dist2 [ft]	Val1 [Kip/ft]	Val2 [Kip/ft]
DL	1	0.00	8.00	-1.55	-1.55

Loads summary

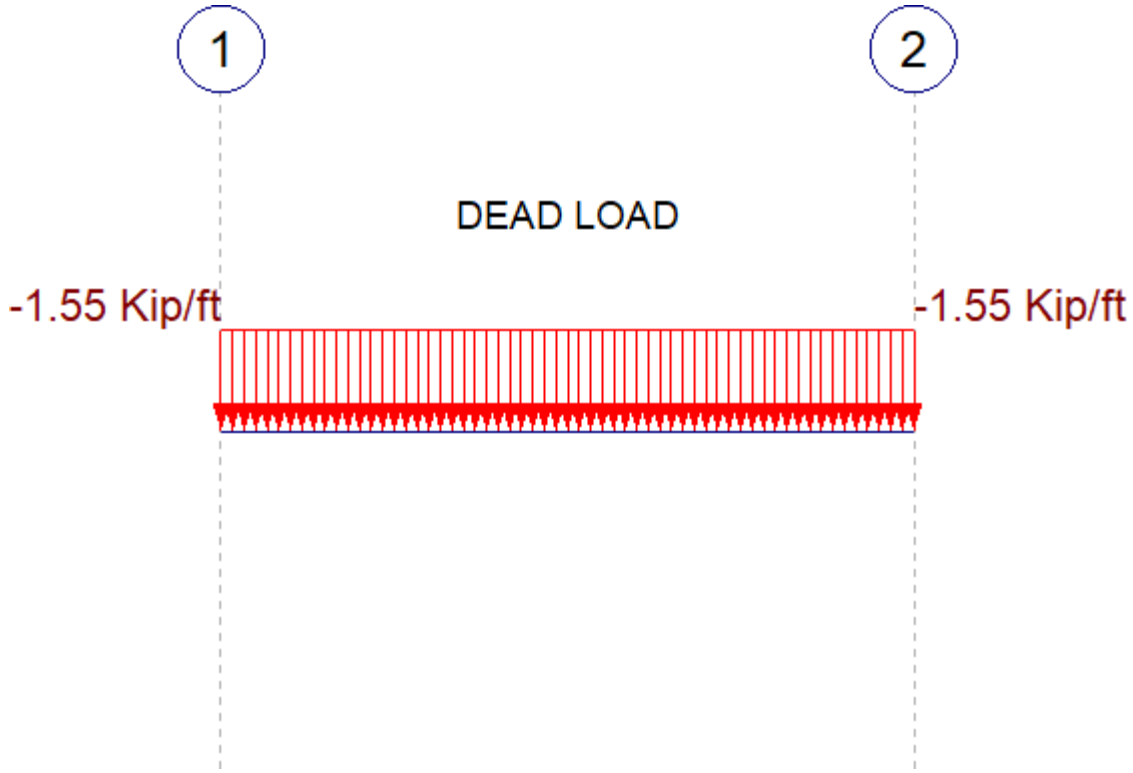

Reactions:

Nodes	condition	Rx [Kip]	Ry [Kip]	Mz [Kip*ft]
1	D1	0.00	6.20	0.00
2	D1	0.00	6.20	0.00
1	Min.	0.00	6.20	0.00
2	Min.	0.00	6.20	0.00
1	Max.	0.00	6.20	0.00
2	Max.	0.00	6.20	0.00

Member forces and inflection points

Station [%]	Condition	Distance [ft]	Shear V [Kip]	Moment M [Kip*ft]
0	D1	0.00	6.20	0.00
50	D1	4.00	0.00	12.40
100	D1	8.00	-6.20	0.00

Critical deflections

Condition	Span	Distance [ft]	@ [%]	Deflection [in]	Deflection f(L)	Allowable [in]
S1	1	4.00	50.00	0.01290	(L/7440)	0.40000

Envelopes :

M33 bending moment:
Moments [Kip*ft], Length [ft]

Max : 12.3981[Kip*ft] at 3.95[ft] from J

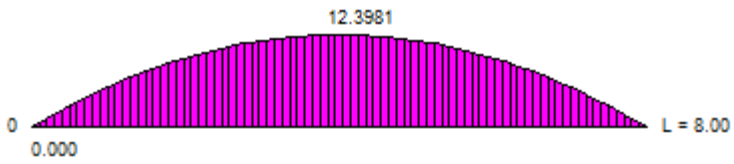

Min : 0.000[Kip*ft] at 0.00[ft] from J

V2 shear forces:
Forces [Kip], Length [ft]

Max : 6.2000[Kip] at 0.00[ft] from J

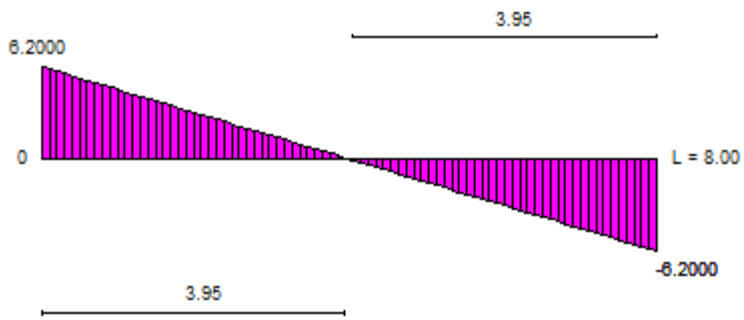

Min : -6.2000[Kip] at 8.00[ft] from J

Vertical Translation
Deflection [in], Length [ft]

Max : 0.000[in] at 0.00[ft] from J

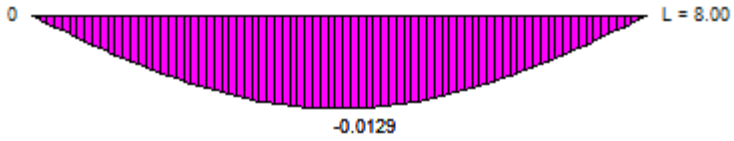

Min : -0.0129[in] at 4.05[ft] from J

DESIGN:

Status : OK

Rebar

Free cover : 1.00 [in]

Longitudinal reinforcement

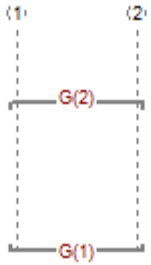

Group	Quantity	Diameter	Pos	Ref. Axis 1	Dist1 [ft]	Ref. Axis 2	Dist2 [ft]	Hook1	Hook2
1	2	#8	Bottom	1	-0.33	2	0.33	Yes	Yes
2	2	#6	Top	1	-0.33	2	0.33	Yes	Yes

Development and splice lengths

Group	Diameter	Ld [in]	Ldh [in]	Splice L. [in]	Total L [ft]
1	#8	48.00	14.00	62.00	10.92
2	#6	37.00	10.00	49.00	10.42

Transverse reinforcement

Span	Diameter	Quantity	@ [in]	Legs	Closed
1-2	#3	15	6.00	2	Yes

Initial spacing of stirrups:

Span	Initial S [in]	Sin lim [in]
0-1	1.00	11.50

FLEXURE

Span: 1-2 **Member No: 0**

Percentage of moment redistribution Support A = 0.00% Support B = 0.00%
Code specified max Rho: ρ_{maxtop} = 2.06% ρ_{maxbot}= 2.06%
Limit spacing between bars for cracking control: sb lim = 12.00 [in]

Positive bending moments

Station No.	Dist	**d**[in]	**Mu**[Kip*ft]	**ϕ*Mn**[Kip*ft]	**Asreq** [in2]	**Asprov** [in2]	**ρ (%)**	**sb** [in]	**Mu/(ϕ*Mn)**
1	0%	22.13	0.00	132.86	0.00	1.44	0.81	2.75	0.00
2	10%	22.13	4.46	144.92	0.04	1.58	0.89	2.75	0.03
3	20%	22.13	7.94	144.92	0.08	1.58	0.89	2.75	0.05
4	30%	22.13	10.42	144.92	0.11	1.58	0.89	2.75	0.07
5	40%	22.13	11.90	144.92	0.12	1.58	0.89	2.75	0.08
6	50%	22.13	12.40	144.92	0.13	1.58	0.89	2.75	0.09
7	60%	22.13	11.90	144.92	0.12	1.58	0.89	2.75	0.08
8	70%	22.13	10.42	144.92	0.11	1.58	0.89	2.75	0.07
9	80%	22.13	7.94	144.92	0.08	1.58	0.89	2.75	0.05
10	90%	22.13	4.46	144.92	0.04	1.58	0.89	2.75	0.03
11	100%	22.13	0.00	132.86	0.00	1.44	0.81	2.75	0.00
C	50%	22.13	12.40	144.92	0.13	1.58	0.89	2.75	0.09

Negative bending moments

Station No.	Dist	**d**[in]	**Mu**[Kip*ft]	**ϕ*Mn**[Kip*ft]	**Asreq** [in2]	**Asprov** [in2]	**ρ (%)**	**sb** [in]	**Mu/(ϕ*Mn)**
1	0%	22.25	0.00	-81.55	0.00	0.85	0.48	3.00	0.00
2	10%	22.25	0.00	-84.27	0.00	0.88	0.49	3.00	0.03
3	20%	22.25	0.00	-84.27	0.00	0.88	0.49	3.00	0.05
4	30%	22.25	0.00	-84.27	0.00	0.88	0.49	3.00	0.07
5	40%	22.25	0.00	-84.27	0.00	0.88	0.49	3.00	0.08
6	50%	22.25	0.00	-84.27	0.00	0.88	0.49	3.00	0.09
7	60%	22.25	0.00	-84.27	0.00	0.88	0.49	3.00	0.08
8	70%	22.25	0.00	-84.27	0.00	0.88	0.49	3.00	0.07
9	80%	22.25	0.00	-84.27	0.00	0.88	0.49	3.00	0.05
10	90%	22.25	0.00	-84.27	0.00	0.88	0.49	3.00	0.03
11	100%	22.25	0.00	-81.55	0.00	0.85	0.48	3.00	0.00

C	50%	22.25	0.00	-84.27	0.00	0.88	0.49	3.00	0.09

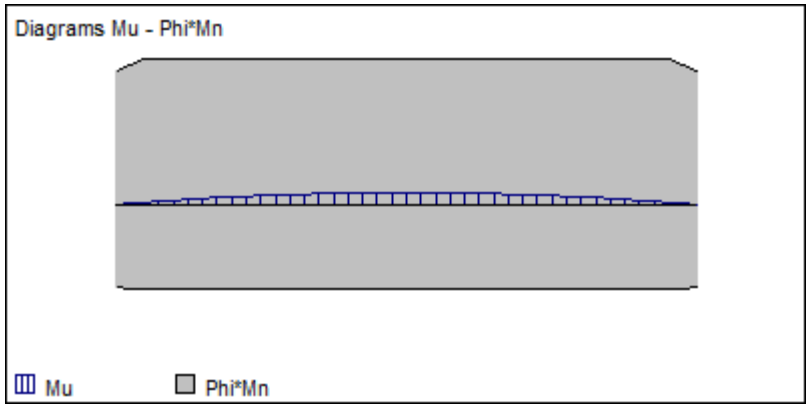

SHEAR AND TORSION

Span: 1-2 **Member No: 0**

Station		Stirrups		Spc prov	Spc lim	Tu	ϕ*Tn	Al	Vu	Vs	Vc	ϕ*Vn	Vu/(ϕ*Vn)
No.	Dist	Diam	VCT	[in]	[in]	[Kip*ft]	[Kip*ft]	[in2]	[Kip]	[Kip]	[Kip]	[Kip]	
1	0%	#3		6.00	11.13	0.00	14.22	0.00	3.01	48.95	22.52	53.60	0.06
2	10%	#3		6.00	11.06	0.00	14.22	0.00	3.01	48.68	22.39	53.30	0.06
3	20%	#3		6.00	11.06	0.00	14.22	0.00	3.01	48.68	22.39	53.30	0.06
4	30%	#3		6.00	11.06	0.00	14.22	0.00	2.48	48.68	22.39	53.30	0.05
5	40%	#3		6.00	11.06	0.00	14.22	0.00	1.24	48.68	22.39	53.30	0.02
6	50%	#3		6.00	11.06	0.00	14.22	0.00	0.00	48.68	22.39	53.30	0.00
7	60%	#3		6.00	11.06	0.00	14.22	0.00	1.24	48.68	22.39	53.30	0.02
8	70%	#3		6.00	11.06	0.00	14.22	0.00	2.48	48.68	22.39	53.30	0.05

C60

9	80%	#3	6.00	11.06	0.00	14.22	0.00	3.01	48.68	22.39	53.30	0.06
10	90%	#3	6.00	11.06	0.00	14.22	0.00	3.01	48.68	22.39	53.30	0.06
11	100%	#3	6.00	11.06	0.00	14.22	0.00	3.01	48.68	22.39	53.30	0.06
C	2%	#3	6.00	11.06	0.00	14.22	0.00	3.01	48.68	22.39	53.30	0.06

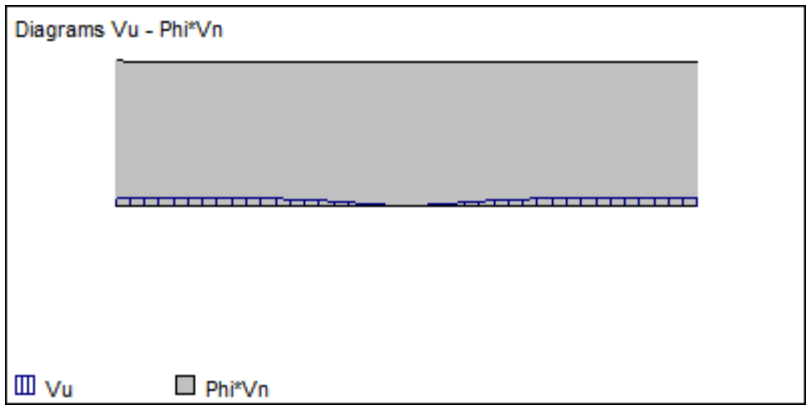

Notes

* Only the design bending forces (Mu), shear forces (Vu) and torsion moments (Tu) are considered in the design.
* Values shown in red are not in compliance with a provision of the code
* The positive and negative flexural reinforcement includes the longitudinal reinforcement required to resist torsion. Refer to the note below on the VCT column to determine when torsion and compression bars are provided. The longitudinal reinforcement area considers the minimum area required by Code (10.5).
* When the moments diagram increases in the same direction of the development length of the bars, the bars will not contribute to the member strength for a Code specified distance equal to max(12*db,d).

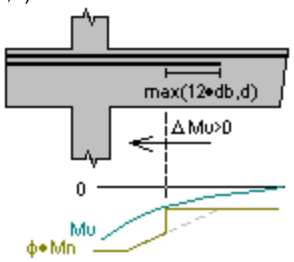

C61

* If the section at which member flexural strength is being calculated is within the development length of a group of bars, the bars will contribute to the bending capacity an amount proportional to their actual length / their full development length.
* The transverse reinforcement is ordered from left to right.
* The program does not consider ACI318-14 section 7.7.3.8.3 whereby the bar diameter is limited according to the location of the bar cut-off.
* Asprov is the provided reinforcement, considering the reduction due to the development length as described previously.
* "C" shows the span critical station.
* Ld,Ldh = Development length of each bar. If the bar ends with a hook, it considers the Ldh length.
* Splice lengths shown are not reduced by the factor Asreq/Asprov.
* sb = Free distance between top or bottom bars corresponding to the layer closest to the extreme face of the beam (layer1). It is not calculated when there is only one bar.
* Stirrups VCT = Flag that determines if stirrups are required to resist shear forces (V), torsion (T) or to confine the the longitudinal compression bars from buckling (C).
* Closed = Flag that indicates if the stirrups are closed (yes) or open (no).
* Mu/(ϕ*Mn) = Critical strength ratio for the station. If the value is in red, it is larger than 1.0
* Al = Total additional longitudinal reinforcement required by torsion.
* Spa = stirrup spacing provided by the user.
* Spa lim = spacing limits due to geometry. (9.7.6.2.2, 9.7.6.5.2, 18.4.2.4, 18.6.4.7)

CB3 36 × 30 (size) Length = 29.5 ft.

T: 5 - #10T

B: 11 - #11B

Transv.: #4 @ 5"

DL = 222 psf.

LL = 80 psf.

Tributary Width => $\left.\begin{array}{l}(26.5\,ft)(0.25) = 6.625\,ft \\ (28.5\,ft)(0.25) = 7.125\,ft\end{array}\right\} = \underline{\underline{14\,ft}}$

Beam Self Weight = $(36/12)(30/12)(150) = 825$ plf.

* Strength Design.

$$\left.\begin{array}{l}\Sigma DL = (1.2)\left[(222)(14) + 825\right] = 4720 \text{ plf.} \\ \Sigma LL = (1.6)(80 \cdot 14) = 1792 \text{ plf}\end{array}\right\} \underline{\underline{6.52 \text{ klf}}}$$

Line load.

Moments

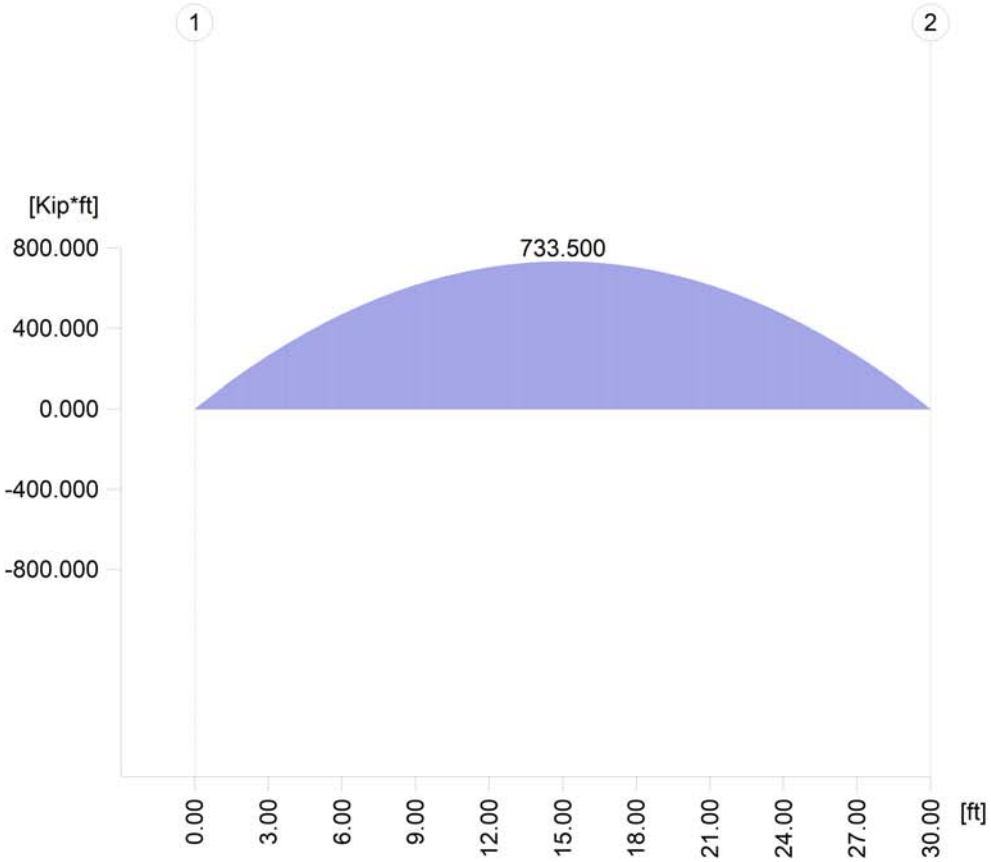

Shear

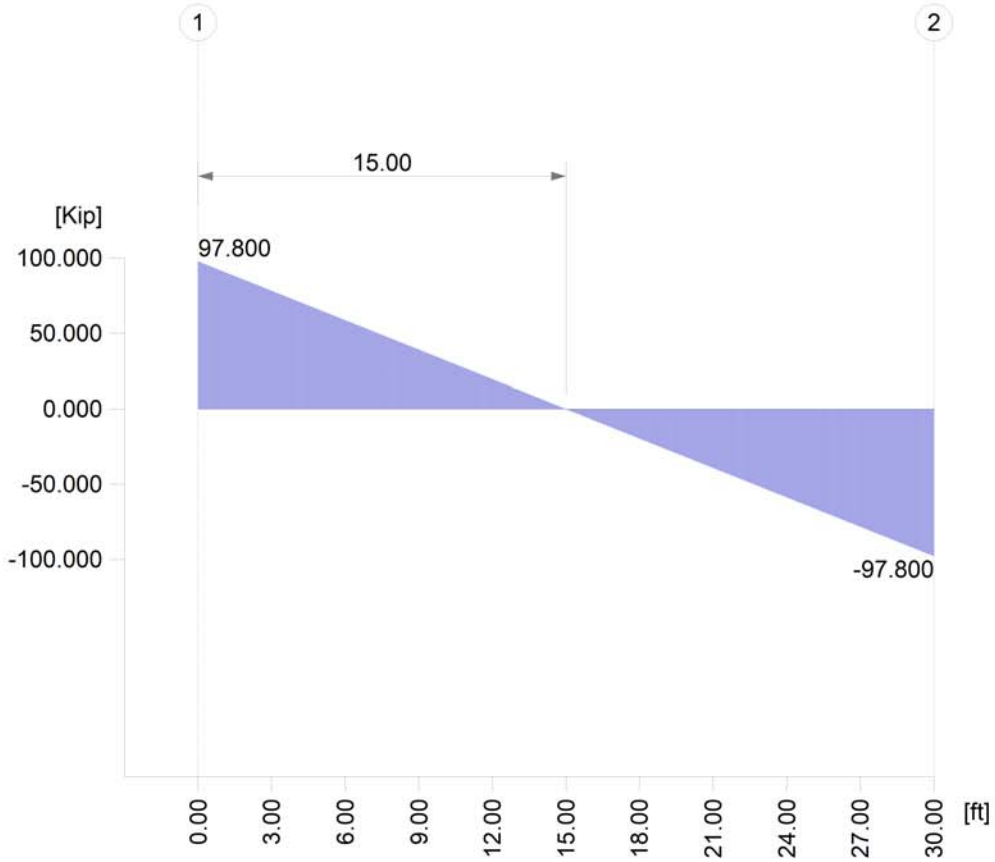

Current Date: 2/9/2021 2:13 PM
Units system: English
File name: Z:\!2020 Projects\Archeon - Lancaster\Calc\!2nd Submittal\Concrete Beams\CBM3.rcb

Design Results

Continuous Beam
Design code ACI 318-2014

GENERAL INFORMATION:

Spans:

Span	Span length [ft]	Section	Material
1	30.00	RcBeam 30x30in	C 4-60

Nodes:

Distance [ft]	Restraint	Tx	Ty	Rz
0.00	Pinned	1	1	0
30.00	Pinned	1	1	0

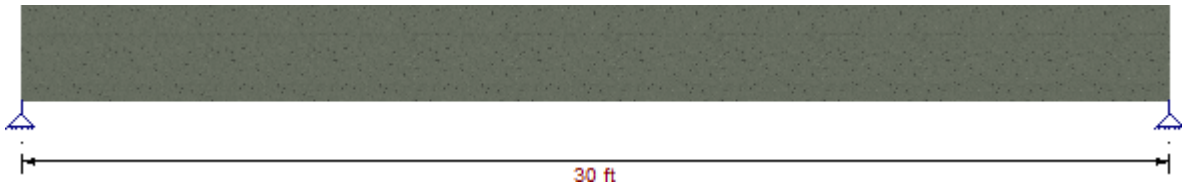

Load conditions:

Condition	Description	Comb.	Category	Duration	Self Weight
DL	Dead Load	No	DL	--	No
LL	Live Load	No	LL	--	--
S1	DL+LL	Yes	Service	--	No
D1	DL+LL	Yes	Design	--	No

Distributed loads on spans

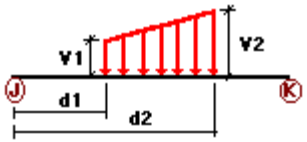

Condition	Span(s)	Dist1 [ft]	Dist2 [ft]	Val1 [Kip/ft]	Val2 [Kip/ft]
DL	1	0.00	30.00	-6.52	-6.52

Loads summary

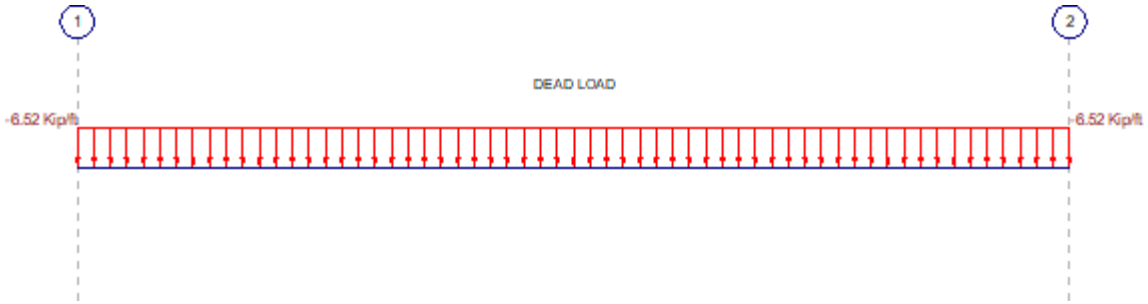

Reactions:

Nodes	condition	Rx [Kip]	Ry [Kip]	Mz [Kip*ft]
1	D1	0.00	97.80	0.00
2	D1	0.00	97.80	0.00
1	Min.	0.00	97.80	0.00
2	Min.	0.00	97.80	0.00
1	Max.	0.00	97.80	0.00
2	Max.	0.00	97.80	0.00

Member forces and inflection points

Station [%]	Condition	Distance [ft]	Shear V [Kip]	Moment M [Kip*ft]
0	D1	0.00	97.80	0.00
50	D1	15.00	0.00	733.50
100	D1	30.00	-97.80	0.00

Critical deflections

Condition	Span	Distance [ft]	@ [%]	Deflection [in]	Deflection f(L)	Allowable [in]
S1	1	15.00	50.00	1.40302	(L/257)	1.50000

Envelopes :

M33 bending moment:
Moments [Kip*ft], Length [ft]

Max : 733.3882[Kip*ft] at 15.19[ft] from J

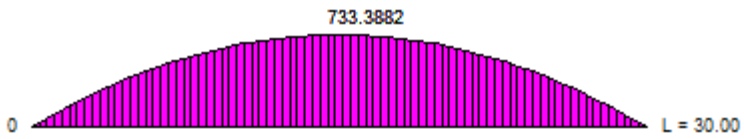

Min : 0.000[Kip*ft] at 0.00[ft] from J

V2 shear forces:
Forces [Kip], Length [ft]

Max : 97.8000[Kip] at 0.00[ft] from J

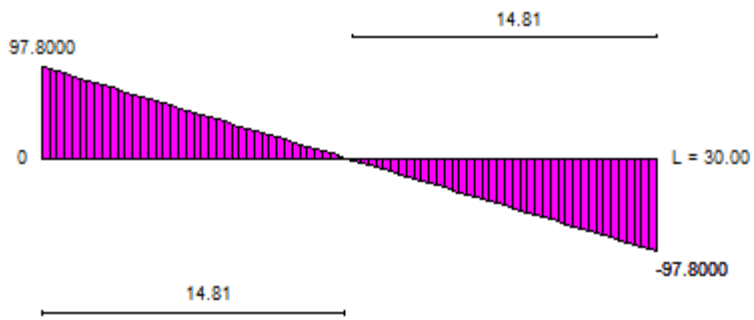

Min : -97.8000[Kip] at 30.00[ft] from J

Vertical Translation
Deflection [in], Length [ft]

Max : 0.000[in] at 0.00[ft] from J

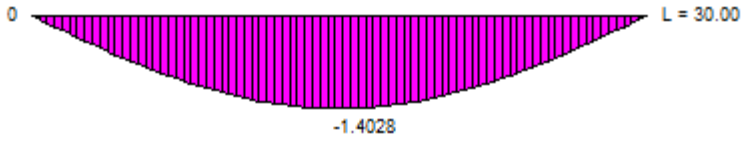

Min : -1.4028[in] at 14.81[ft] from J

DESIGN:

Status : OK

Rebar

Free cover : 1.00 [in]

Longitudinal reinforcement

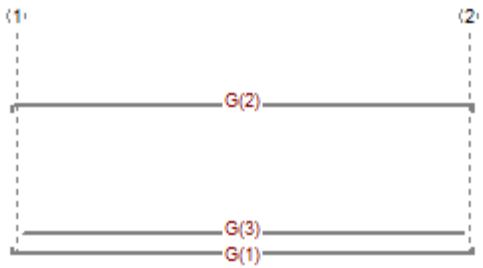

Group	Quantity	Diameter	Pos	Ref. Axis 1	Dist1 [ft]	Ref. Axis 2	Dist2 [ft]	Hook1	Hook2
1	6	#11	Bottom	1	-0.33	2	0.33	Yes	Yes
2	5	#10	Top	1	-0.33	2	0.33	Yes	Yes
3	5	#11	Bottom	2	-29.58	1	29.58	No	No

Development and splice lengths

Group	Diameter	Ld [in]	Ldh [in]	Splice L. [in]	Total L [ft]
1	#11	67.00	22.00	87.00	34.17
2	#10	79.00	17.00	102.00	33.83
3	#11	67.00	22.00	87.00	29.17

Transverse reinforcement

Span	Diameter	Quantity	@ [in]	Legs	Closed
1-2	#4	70	5.00	2	Yes

Initial spacing of stirrups:

Span	Initial S [in]	Sin lim [in]
0-1	2.50	14.50

FLEXURE

Span: 1-2 **Member No: 0**

Percentage of moment redistribution Support A = 0.00% Support B = 0.00%
Code specified max Rho: ρ_{maxtop} = 2.06% ρ_{maxbot}= 2.80%
Limit spacing between bars for cracking control: sb lim = 12.00 [in]

Positive bending moments

Station No.	Dist	d[in]	Mu[Kip*ft]	ϕ*Mn[Kip*ft]	Asreq [in2]	Asprov [in2]	ρ (%)	sb [in]	Mu/(ϕ*Mn)
1	0%	27.80	0.00	876.69	0.00	7.62	0.91	1.72	0.00
2	10%	27.36	264.06	1415.62	2.20	13.44	1.64	1.72	0.19
3	20%	27.36	469.44	1876.93	3.98	17.16	2.09	1.72	0.25
4	30%	27.36	616.14	1876.93	5.31	17.16	2.09	1.72	0.33
5	40%	27.36	704.16	1876.93	6.12	17.16	2.09	1.72	0.38
6	50%	27.36	733.50	1876.93	6.40	17.16	2.09	1.72	0.39
7	60%	27.36	704.16	1876.93	6.12	17.16	2.09	1.72	0.38
8	70%	27.36	616.14	1876.93	5.31	17.16	2.09	1.72	0.33
9	80%	27.36	469.44	1876.93	3.98	17.16	2.09	1.72	0.25
10	90%	27.36	264.06	1415.62	2.20	13.44	1.64	1.72	0.19
11	100%	27.80	0.00	876.69	0.00	7.62	0.91	1.72	0.00
C	50%	27.36	733.50	1876.93	6.40	17.16	2.09	1.72	0.39

Negative bending moments

Station No.	Dist	d[in]	Mu[Kip*ft]	ϕ*Mn[Kip*ft]	Asreq [in2]	Asprov [in2]	ρ (%)	sb [in]	Mu/(ϕ*Mn)
1	0%	27.87	0.00	-651.91	0.00	5.52	0.66	4.98	0.00
2	10%	27.87	0.00	-742.87	0.00	6.35	0.76	4.98	0.19
3	20%	27.87	0.00	-742.87	0.00	6.35	0.77	4.98	0.25
4	30%	27.87	0.00	-742.87	0.00	6.35	0.77	4.98	0.33
5	40%	27.87	0.00	-742.87	0.00	6.35	0.77	4.98	0.38
6	50%	27.87	0.00	-742.87	0.00	6.35	0.77	4.98	0.39
7	60%	27.87	0.00	-742.87	0.00	6.35	0.77	4.98	0.38
8	70%	27.87	0.00	-742.87	0.00	6.35	0.77	4.98	0.33
9	80%	27.87	0.00	-742.87	0.00	6.35	0.77	4.98	0.25
10	90%	27.87	0.00	-742.87	0.00	6.35	0.76	4.98	0.19
11	100%	27.87	0.00	-651.91	0.00	5.52	0.66	4.98	0.00
C	50%	27.87	0.00	-742.87	0.00	6.35	0.77	4.98	0.39

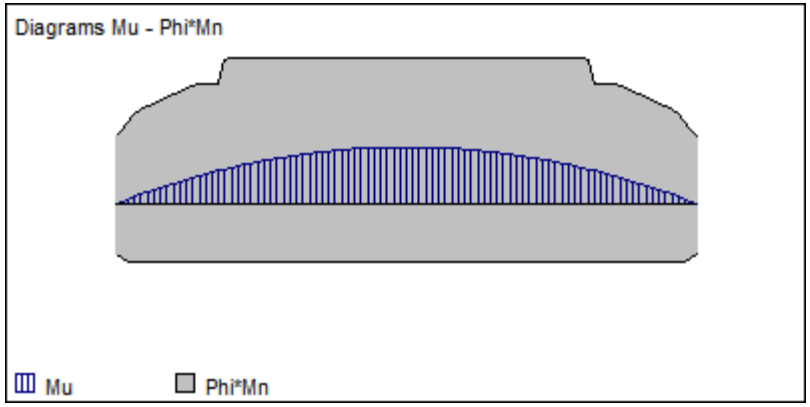

SHEAR AND TORSION

Span: 1-2 **Member No: 0**

Station		Stirrups		Spc prov	Spc lim	Tu	ϕ*Tn	Al	Vu	Vs	Vc	ϕ*Vn	Vu/(ϕ*Vn)
No.	Dist	Diam	VCT	[in]	[in]	[Kip*ft]	[Kip*ft]	[in2]	[Kip]	[Kip]	[Kip]	[Kip]	
1	0%	#4	V	5.00	13.90	0.00	186.75	0.00	82.27	133.42	105.47	179.17	0.46
2	10%	#4	V	5.00	13.68	0.00	192.10	0.00	78.24	131.31	103.81	176.34	0.44
3	20%	#4	V	5.00	13.68	0.00	192.84	0.00	58.68	131.31	103.81	176.34	0.33
4	30%	#4	V	5.00	13.68	0.00	192.84	0.00	39.12	131.31	103.81	176.34	0.22
5	40%	#4		5.00	13.68	0.00	192.84	0.00	19.56	131.31	103.81	176.34	0.11
6	50%	#4		5.00	13.68	0.00	192.84	0.00	0.00	131.31	103.81	176.34	0.00
7	60%	#4		5.00	13.68	0.00	192.84	0.00	19.56	131.31	103.81	176.34	0.11
8	70%	#4	V	5.00	13.68	0.00	192.84	0.00	39.12	131.31	103.81	176.34	0.22
9	80%	#4	V	5.00	13.68	0.00	192.84	0.00	58.68	131.31	103.81	176.34	0.33
10	90%	#4	V	5.00	13.68	0.00	192.10	0.00	78.24	131.31	103.81	176.34	0.44
11	100%	#4	V	5.00	13.90	0.00	186.75	0.00	82.27	133.42	105.47	179.17	0.46
C	1%	#4	V	5.00	13.68	0.00	184.21	0.00	82.27	131.31	103.81	176.34	0.47

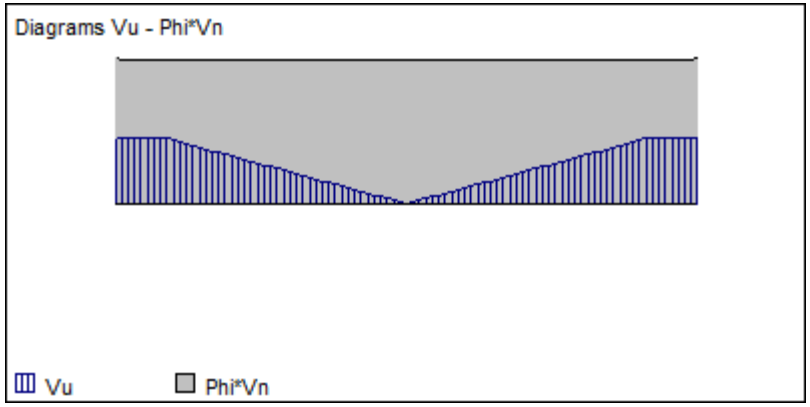

Notes

* Only the design bending forces (Mu), shear forces (Vu) and torsion moments (Tu) are considered in the design.
* Values shown in red are not in compliance with a provision of the code
* The positive and negative flexural reinforcement includes the longitudinal reinforcement required to resist torsion. Refer to the note below on the VCT column to determine when torsion and compression bars are provided. The longitudinal reinforcement area considers the minimum area required by Code (10.5).
* When the moments diagram increases in the same direction of the development length of the bars, the bars will not contribute to the member strength for a Code specified distance equal to max(12*db,d).

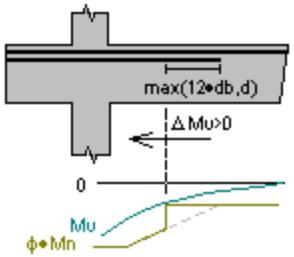

* If the section at which member flexural strength is being calculated is within the development length of a group of bars, the bars will contribute to the bending capacity an amount proportional to their actual length / their full development length.
* The transverse reinforcement is ordered from left to right.
* The program does not consider ACI318-14 section 7.7.3.8.3 whereby the bar diameter is limited according to the location of the bar cut-off.
* Asprov is the provided reinforcement, considering the reduction due to the development length as described previously.
* "C" shows the span critical station.
* Ld,Ldh = Development length of each bar. If the bar ends with a hook, it considers the Ldh length.
* Splice lengths shown are not reduced by the factor Asreq/Asprov.
* sb = Free distance between top or bottom bars corresponding to the layer closest to the extreme face of the beam (layer1). It is not calculated when there is only one bar.
* Stirrups VCT = Flag that determines if stirrups are required to resist shear forces (V), torsion (T) or to confine the the longitudinal compression bars from buckling (C).
* Closed = Flag that indicates if the stirrups are closed (yes) or open (no).
* Mu/(ϕ*Mn) = Critical strength ratio for the station. If the value is in red, it is larger than 1.0
* Al = Total additional longitudinal reinforcement required by torsion.
* Spa = stirrup spacing provided by the user.
* Spa lim = spacing limits due to geometry. (9.7.6.2.2, 9.7.6.5.2, 18.4.2.4, 18.6.4.7)

THANG LE, S.E.
STRUCTURAL ENGINEER
Phone: (626) 731-1539 Fax: (626) 447-3400

CONCRETE COLUMN DESIGN

Concrete Column Design Criteria

E1

RAM Concrete Column v17.01.01.05
Database: ASD CMU - 12.08.2020 - Essex Project - 02.05.21 02/08/21 14:31:26
Building Code: IBC Concrete Code: ACI 318-14

COLUMN DESIGN CRITERIA - GLOBAL:

Reinforcement Properties Table: RAMASTM

Code: ACI 318-14

Frame Type:
Ordinary Moment Frame

Seismic Design Category: A

Reinforcement:

Clear Bar Spacing - Shear/Transverse Ties (in)	Max:	CODE	Min:	CODE
Clear Bar Spacing - Shear Spiral (in)	Max:	CODE	Min:	CODE
Clear Bar Spacing - Flexure + Axial/Longitudinal (in)	Max:	CODE	Min:	CODE
Reinforcement Ratio	Max:	CODE	Min:	CODE
Clear Bar Cover (in)	CODE			

Bar Selection:

Transverse Segment Spacing Increment (in)	12.00			
Transverse Bar Spacing Increment (in)	3.00			
Number Of Shear Bar Legs	Major:	2	Minor:	2

Design Checks:
Include Torsional Capacity Code Check
Include Max Column Axial Load Limit Code Check
Lateral Column Gravity Design Forces from RAM Concrete Analysis

Lap Splices:

For Bars less than or equal to #6 use Lap Splice	36.00 x d
For Bars greater than #6 use Lap Splice	55.00 x d

Rectangular Bar Patterns:

Bar Pattern Name		Trans Bar Size	Longitudinal Bars Min Size	Longitudinal Bars Max Size	Bar Quantity Top/Bottom	Bar Quantity Additional Side Bars
6 (2 x 1)	#8 - #8	#3	#8	#8	2	1

COLUMN DESIGN CRITERIA - ASSIGNED:

Column Stack Location: (66.56ft-59.85ft)

		Shear Legs	
Level	**Section**	**Major**	**Minor**
Podium	*24 x 12	2	2

Assigned Pattern Groups **1:** 6 (2 x 1) #8 - #8, #3

Column Stack Location: (66.56ft-147.43ft)

		Shear Legs	
Level	**Section**	**Major**	**Minor**
Podium	*24 x 12	2	2

Assigned Pattern Groups **1:** 6 (2 x 1) #8 - #8, #3

Column Stack Location: (71.89ft-58.35ft)

		Shear Legs	
Level	**Section**	**Major**	**Minor**
Podium	*24 x 12	2	2

Assigned Pattern Groups **1:** 6 (2 x 1) #8 - #8, #3

Column Stack Location: (92.23ft-58.52ft)

		Shear Legs	
Level	**Section**	**Major**	**Minor**
Podium	*24 x 12	2	2

Assigned Pattern Groups **1:** 6 (2 x 1) #8 - #8, #3

Column Stack Location: (92.23ft-88.52ft)

		Shear Legs	
Level	**Section**	**Major**	**Minor**
Podium	*24 x 12	2	2

Assigned Pattern Groups **1:** 6 (2 x 1) #8 - #8, #3

Column Stack Location: (92.23ft-118.43ft)

		Shear Legs	
Level	**Section**	**Major**	**Minor**
Podium	*24 x 12	2	2

Assigned Pattern Groups **1:** 6 (2 x 1) #8 - #8, #3

Column Stack Location: (121.56ft-58.52ft)

		Shear Legs	
Level	**Section**	**Major**	**Minor**
Podium	*24 x 12	2	2

Assigned Pattern Groups **1:** 6 (2 x 1) #8 - #8, #3

Column Stack Location: (121.56ft-88.52ft)

		Shear Legs	
Level	**Section**	**Major**	**Minor**
Podium	*24 x 12	2	2

Assigned Pattern Groups **1:** 6 (2 x 1) #8 - #8, #3

Column Stack Location: (121.56ft-118.43ft)

		Shear Legs	
Level	**Section**	**Major**	**Minor**
Podium	*24 x 12	2	2

Assigned Pattern Groups **1:** 6 (2 x 1) #8 - #8, #3

Column Stack Location: (152.23ft-58.52ft)

		Shear Legs	
Level	**Section**	**Major**	**Minor**
Podium	*24 x 12	2	2

Assigned Pattern Groups **1:** 6 (2 x 1) #8 - #8, #3

Column Stack Location: (152.23ft-88.52ft)

		Shear Legs	
Level	**Section**	**Major**	**Minor**
Podium	*24 x 12	2	2

Assigned Pattern Groups **1:** 6 (2 x 1) #8 - #8, #3

Column Stack Location: (152.23ft-118.43ft)

		Shear Legs	
Level	**Section**	**Major**	**Minor**
Podium	*24 x 12	2	2

Assigned Pattern Groups **1:** 6 (2 x 1) #8 - #8, #3

Column Stack Location: (182.89ft-58.52ft)

		Shear Legs	
Level	**Section**	**Major**	**Minor**
Podium	*24 x 12	2	2

Assigned Pattern Groups **1:** 6 (2 x 1) #8 - #8, #3

Column Stack Location: (182.89ft-88.52ft)

Level	Section	Shear Legs Major	Shear Legs Minor
Podium	*24 x 12	2	2

Assigned Pattern Groups **1:** 6 (2 x 1) #8 - #8, #3

Column Stack Location: (182.89ft-118.43ft)

Level	Section	Shear Legs Major	Shear Legs Minor
Podium	*24 x 12	2	2

Assigned Pattern Groups **1:** 6 (2 x 1) #8 - #8, #3

Column Stack Location: (212.98ft-147.93ft)

Level	Section	Shear Legs Major	Shear Legs Minor
Podium	*24 x 12	2	2

Assigned Pattern Groups **1:** 6 (2 x 1) #8 - #8, #3

Column Stack Location: (213.56ft-58.35ft)

Level	Section	Shear Legs Major	Shear Legs Minor
Podium	*24 x 12	2	2

Assigned Pattern Groups **1:** 6 (2 x 1) #8 - #8, #3

Column Stack Location: (213.56ft-88.52ft)

Level	Section	Shear Legs Major	Shear Legs Minor
Podium	*24 x 12	2	2

Assigned Pattern Groups **1:** 6 (2 x 1) #8 - #8, #3

Column Stack Location: (213.56ft-118.43ft)

Level	Section	Shear Legs Major	Shear Legs Minor
Podium	*24 x 12	2	2

Assigned Pattern Groups **1:** 6 (2 x 1) #8 - #8, #3

Column Stack Location: (243.98ft-147.93ft)

		Shear Legs	
Level	**Section**	**Major**	**Minor**
Podium	*24 x 12	2	2

Assigned Pattern Groups **1:** 6 (2 x 1) #8 - #8, #3

Column Stack Location: (244.23ft-58.52ft)

		Shear Legs	
Level	**Section**	**Major**	**Minor**
Podium	*24 x 12	2	2

Assigned Pattern Groups **1:** 6 (2 x 1) #8 - #8, #3

Column Stack Location: (244.23ft-88.52ft)

		Shear Legs	
Level	**Section**	**Major**	**Minor**
Podium	*24 x 12	2	2

Assigned Pattern Groups **1:** 6 (2 x 1) #8 - #8, #3

Column Stack Location: (244.23ft-118.43ft)

		Shear Legs	
Level	**Section**	**Major**	**Minor**
Podium	*24 x 12	2	2

Assigned Pattern Groups **1:** 6 (2 x 1) #8 - #8, #3

Column Stack Location: (259.14ft-58.35ft)

		Shear Legs	
Level	**Section**	**Major**	**Minor**
Podium	*24 x 12	2	2

Assigned Pattern Groups **1:** 6 (2 x 1) #8 - #8, #3

Column Stack Location: (269.52ft-59.85ft)

		Shear Legs	
Level	**Section**	**Major**	**Minor**
Podium	*24 x 12	2	2

Assigned Pattern Groups **1:** 6 (2 x 1) #8 - #8, #3

Column Stack Location: (269.52ft-147.43ft)

		Shear Legs	
Level	**Section**	**Major**	**Minor**
Podium	*24 x 12	2	2

Assigned Pattern Groups **1:** 6 (2 x 1) #8 - #8, #3

COLUMN ID & MAP

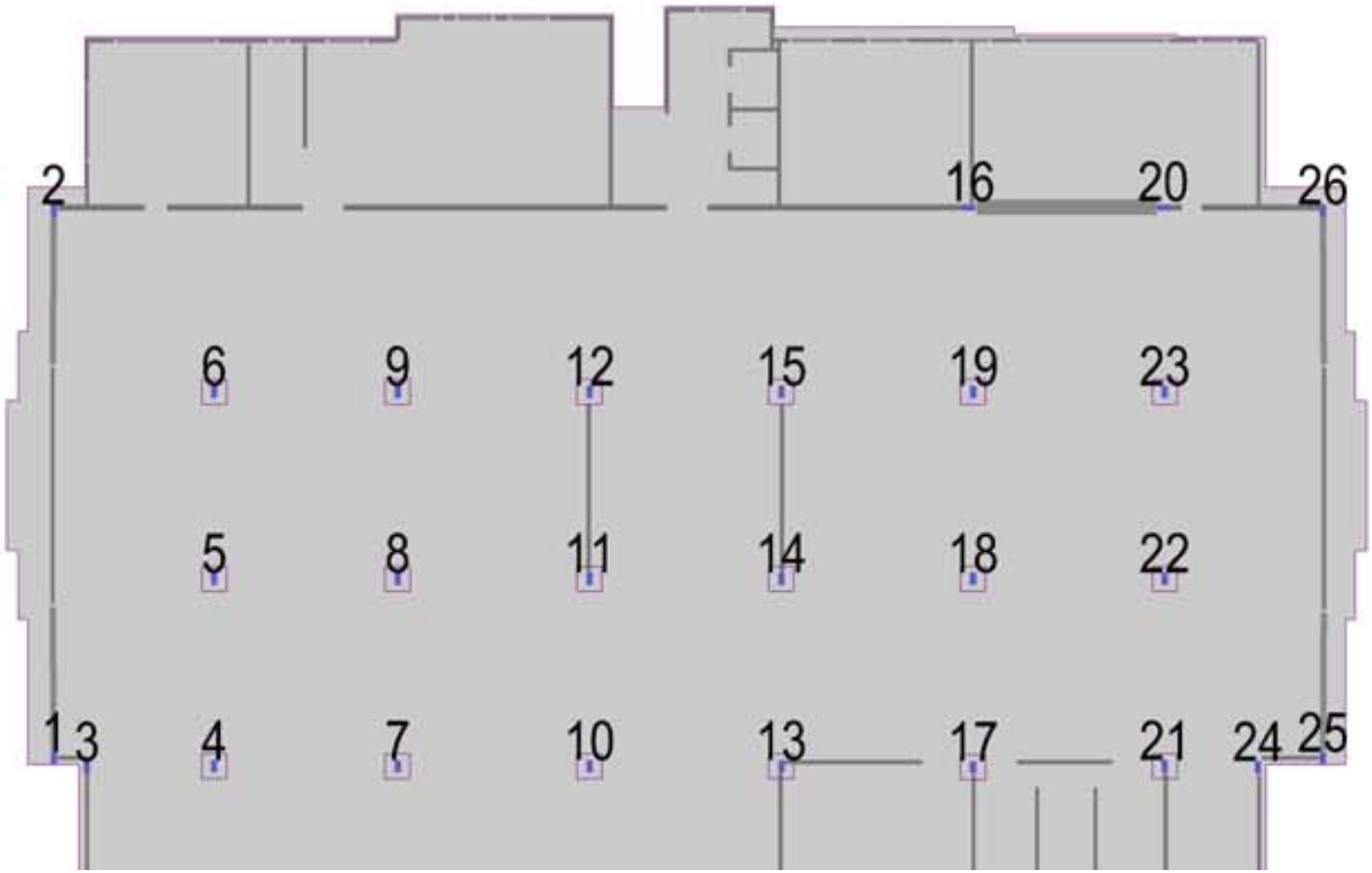

Concrete Column Design

RAM Concrete Column v17.01.01.05
Database: ASD CMU - 12.08.2020 - Essex Project - 02.05.21 — 02/08/21 14:31:26
Building Code: IBC — Concrete Code: ACI 318-14

COLUMN INFORMATION:

Level: Podium
Column Number: 26 — Grid Location: (269.52ft-147.43ft)
Size: ***24 x 12** — Depth x Width (in): 24.00x12.00
Reinforcement
Longitudinal: **6-#8 (2 x 1)** — As (in²): 4.74 (1.65%)
Transverse: **#3@ 4.0" 0'-0"-13'-0"**
Confinement: Tie — Clear Cover (in): 1.50
Shear Legs Major: 2 — Shear Legs Minor: 2
Longitudinal Bars Max Tension Stress Ratio: 1.00

MATERIAL PROPERTIES:

f'c (ksi): 4.00 — fy Long (ksi): 60.00
fct (ksi): 0.00 — fyt Trans (ksi): 60.00
Conc. Weight (pcf): 150.01 — Conc. Type: NWC
Conc. Modulus (ksi): 3834.80 — Reinf. Modulus (ksi): 29000.00

DESIGN PARAMETERS:

	Major	Minor
Unbraced Length (ft)	13.00	13.00
K	1.91	1.91
Braced Against Sidesway	No	No

LONGITUDINAL REINFORCEMENT:

Controlling Load Combination: (2) 1.200 D + 1.600 Lp

Axial		Load (kip)	62.25
Moment	Top	Major(kip-ft)	-80.66
		Minor(kip-ft)	4.98
Moment	Bottom	Major(kip-ft)	26.79
		Minor(kip-ft)	-4.98

Calculated Parameters (Angle = 3.53 degrees): Ld/Cap = 0.38
0.77 Pn(kip): 62.25
0.77 Mn Major(kip-ft): 214.29 — 0.77 Mn Minor(kip-ft): 13.23

	Major	Minor
Kl/r	43.01	86.02
Slender	Yes	Yes
Slenderness:		
Pu (kip)	62.25	62.25
Combination	2	2
Cm	0.47	0.47
K	1.00	1.00
δns	1.00	1.00
βd	0.75	0.75
Pc (kip)	4904.98	1226.25
Ig (in^4)	13824.00	3456.00

TRANSVERSE REINFORCEMENT:

Controlling Load Combination: (2) 1.200 D + 1.600 Lp

Concrete Column Design

E8

RAM Concrete Column v17.01.01.05 — Page 2/52
Database: ASD CMU - 12.08.2020 - Essex Project - 02.05.21 — 02/08/21 14:31:26
Building Code: IBC — Concrete Code: ACI 318-14

	LC	Vu (kip)	Vc (kip)	Vs (kip)	ϕ	ϕ (Vc + Vs) (kip)	Ld/Cap
1 Major:	0	9.14	36.37	71.36	0.75	80.80	0.11
1 Minor:	0	0.28	32.38	31.76	0.75	48.10	0.01

TORSION CAPACITY:

Controlling Load Combination: (2) 1.200 D + 1.600 Lp
0.75 Tn (kip-ft): 6.20 — Tu (kip-ft): 0.00

Concrete Column Design

RAM Concrete Column v17.01.01.05 — Page 3/52
Database: ASD CMU - 12.08.2020 - Essex Project - 02.05.21 — 02/08/21 14:31:26
Building Code: IBC — Concrete Code: ACI 318-14

COLUMN INFORMATION:

Level: Podium
Column Number: 25 — Grid Location: (269.52ft-59.85ft)
Size: ***24 x 12** — Depth x Width (in): 24.00x12.00
Reinforcement
Longitudinal: **6-#8 (2 x 1)** — As (in²): 4.74 (1.65%)
Transverse: **#3@ 4.0" 0'-0"-13'-0"**
Confinement: Tie — Clear Cover (in): 1.50
Shear Legs Major: 2 — Shear Legs Minor: 2
Longitudinal Bars Max Tension Stress Ratio: 1.00

MATERIAL PROPERTIES:

f'c (ksi): 4.00 — fy Long (ksi): 60.00
fct (ksi): 0.00 — fyt Trans (ksi): 60.00
Conc. Weight (pcf): 150.01 — Conc. Type: NWC
Conc. Modulus (ksi): 3834.80 — Reinf. Modulus (ksi): 29000.00

DESIGN PARAMETERS:

	Major	Minor
Unbraced Length (ft)	13.00	13.00
K	1.91	1.91
Braced Against Sidesway	No	No

LONGITUDINAL REINFORCEMENT:

Controlling Load Combination: (2) 1.200 D + 1.600 Lp

Axial		Load (kip)	45.82
Moment	Top	Major(kip-ft)	91.81
		Minor(kip-ft)	4.83
Moment	Bottom	Major(kip-ft)	-30.79
		Minor(kip-ft)	-3.67

Calculated Parameters (Angle = 3.02 degrees): Ld/Cap = 0.39
0.89 Pn(kip): 45.82
0.89 Mn Major(kip-ft): 236.19 — 0.89 Mn Minor(kip-ft): 12.44

	Major	Minor
Kl/r	43.01	86.02
Slender	Yes	Yes
Slenderness:		
Pu (kip)	45.82	45.82
Combination	2	2
Cm	0.47	0.46
K	1.00	1.00
δns	1.00	1.00
βd	0.77	0.77
Pc (kip)	4862.50	1215.63
Ig (in^4)	13824.00	3456.00

TRANSVERSE REINFORCEMENT:

Controlling Load Combination: (2) 1.200 D + 1.600 Lp

Concrete Column Design

RAM Concrete Column v17.01.01.05 — Page 4/52
Database: ASD CMU - 12.08.2020 - Essex Project - 02.05.21 — 02/08/21 14:31:26
Building Code: IBC — Concrete Code: ACI 318-14

	LC	Vu (kip)	Vc (kip)	Vs (kip)	ϕ	ϕ (Vc + Vs) (kip)	Ld/Cap
1 Major:	0	10.43	35.44	71.36	0.75	80.10	0.13
1 Minor:	0	0.55	31.54	31.76	0.75	47.48	0.01

TORSION CAPACITY:

Controlling Load Combination: (2) 1.200 D + 1.600 Lp
0.75 Tn (kip-ft): 5.81 — Tu (kip-ft): 0.00

COLUMN INFORMATION:

Level Podium
Column Number: 24 Grid Location: (259.14ft-58.35ft)
Size: ***24 x 12** Depth x Width (in) 24.00x12.00
Reinforcement
Longitudinal: **6-#8 (2 x 1)** As (in²) 4.74 (1.65%)
Transverse: **#3@ 4.0" 0'-0"-13'-0"**
Confinement Tie Clear Cover (in) 1.50
Shear Legs Major 2 Shear Legs Minor 2
Longitudinal Bars Max Tension Stress Ratio: 1.00

MATERIAL PROPERTIES:

f'c (ksi): 4.00 fy Long (ksi): 60.00
fct (ksi): 0.00 fyt Trans (ksi): 60.00
Conc. Weight (pcf): 150.01 Conc. Type: NWC
Conc. Modulus (ksi): 3834.80 Reinf. Modulus (ksi): 29000.00

DESIGN PARAMETERS:

	Major	Minor
Unbraced Length (ft)	13.00	13.00
K	1.91	1.91
Braced Against Sidesway	No	No

LONGITUDINAL REINFORCEMENT:

Controlling Load Combination: (2) 1.200 D + 1.600 Lp

Axial		Load (kip)	72.51
Moment	Top	Major(kip-ft)	60.01
		Minor(kip-ft)	13.76
Moment	Bottom	Major(kip-ft)	-19.54
		Minor(kip-ft)	-5.80

Calculated Parameters (Angle = 12.92 degrees): Ld/Cap = 0.35

0.66 Pn(kip): 72.51
0.66 Mn Major(kip-ft): 172.74 0.66 Mn Minor(kip-ft): 39.62

	Major	Minor
Kl/r	43.01	86.02
Slender	Yes	Yes
Slenderness:		
Pu (kip)	72.51	72.51
Combination	2	2
Cm	0.47	0.47
K	1.00	1.00
δns	1.00	1.00
βd	0.71	0.71
Pc (kip)	5017.82	1254.45
Ig (in^4)	13824.00	3456.00

TRANSVERSE REINFORCEMENT:

Controlling Load Combination: (2) 1.200 D + 1.600 Lp

	LC	Vu (kip)	Vc (kip)	Vs (kip)	ϕ	ϕ (Vc + Vs) (kip)	Ld/Cap
1 Major:	0	6.83	36.96	71.36	0.75	81.24	0.08
1 Minor:	0	1.58	32.90	31.76	0.75	48.50	0.03

TORSION CAPACITY:

Controlling Load Combination: (2) 1.200 D + 1.600 Lp
0.75 Tn (kip-ft) 6.43 Tu (kip-ft) 0.00

COLUMN INFORMATION:

Level Podium
Column Number: 23 Grid Location: (244.23ft-118.43ft)
Size: ***24 x 12** Depth x Width (in) 24.00x12.00
Reinforcement
Longitudinal: **6-#8 (2 x 1)** As (in²) 4.74 (1.65%)
Transverse: **#3@ 4.0" 0'-0"-13'-0"**
Confinement Tie Clear Cover (in) 1.50
Shear Legs Major 2 Shear Legs Minor 2
Longitudinal Bars Max Tension Stress Ratio: 0.00

MATERIAL PROPERTIES:

f'c (ksi): 4.00 fy Long (ksi): 60.00
fct (ksi): 0.00 fyt Trans (ksi): 60.00
Conc. Weight (pcf): 150.01 Conc. Type: NWC
Conc. Modulus (ksi): 3834.80 Reinf. Modulus (ksi): 29000.00

DESIGN PARAMETERS:

	Major	Minor
Unbraced Length (ft)	13.00	13.00
K	1.91	1.91
Braced Against Sidesway	No	No

LONGITUDINAL REINFORCEMENT:

Controlling Load Combination: (2) 1.200 D + 1.600 Lp

Axial		Load (kip)	355.56
Moment	Top	Major(kip-ft)	39.11
		Minor(kip-ft)	18.11
Moment	Bottom	Major(kip-ft)	-39.11
		Minor(kip-ft)	-5.98

Calculated Parameters (Angle = 8.70 degrees): Ld/Cap = 0.55

0.65 Pn(kip): 355.56
0.65 Mn Major(kip-ft): 215.49 0.65 Mn Minor(kip-ft): 32.96

	Major	Minor
Kl/r	43.01	86.02
Slender	Yes	Yes
Slenderness:		
Pu (kip)	355.56	355.56
Combination	2	2
Cm	0.46	0.47
K	1.00	1.00
δns	1.00	1.00
βd	0.68	0.68
Pc (kip)	5126.64	1281.66
Ig (in^4)	13824.00	3456.00

TRANSVERSE REINFORCEMENT:

Controlling Load Combination: (2) 1.200 D + 1.600 Lp

	LC	Vu (kip)	Vc (kip)	Vs (kip)	ϕ	ϕ (Vc + Vs) (kip)	Ld/Cap
1 Major:	0	2.28	53.09	71.36	0.75	93.34	0.02
1 Minor:	0	2.07	47.26	31.76	0.75	59.26	0.03

TORSION CAPACITY:

Controlling Load Combination: (2) 1.200 D + 1.600 Lp
0.75 Tn (kip-ft) 11.04 Tu (kip-ft) 0.00

COLUMN INFORMATION:

Level Podium
Column Number: 22 Grid Location: (244.23ft-88.52ft)
Size: ***24 x 12** Depth x Width (in) 24.00x12.00
Reinforcement
Longitudinal: **6-#8 (2 x 1)** As (in²) 4.74 (1.65%)
Transverse: **#3@ 4.0" 0'-0"-13'-0"**
Confinement Tie Clear Cover (in) 1.50
Shear Legs Major 2 Shear Legs Minor 2
Longitudinal Bars Max Tension Stress Ratio: 0.00

MATERIAL PROPERTIES:

f'c (ksi): 4.00 fy Long (ksi): 60.00
fct (ksi): 0.00 fyt Trans (ksi): 60.00
Conc. Weight (pcf): 150.01 Conc. Type: NWC
Conc. Modulus (ksi): 3834.80 Reinf. Modulus (ksi): 29000.00

DESIGN PARAMETERS:

	Major	Minor
Unbraced Length (ft)	13.00	13.00
K	1.91	1.91
Braced Against Sidesway	No	No

LONGITUDINAL REINFORCEMENT:

Controlling Load Combination: (2) 1.200 D + 1.600 Lp

Axial		Load (kip)	351.74
Moment	Top	Major(kip-ft)	-38.69
		Minor(kip-ft)	13.26
Moment	Bottom	Major(kip-ft)	38.69
		Minor(kip-ft)	-4.33

Calculated Parameters (Angle = 6.39 degrees): Ld/Cap = 0.54
0.65 Pn(kip): 351.74
0.65 Mn Major(kip-ft): 223.86 0.65 Mn Minor(kip-ft): 25.07

	Major	Minor
Kl/r	43.01	86.02
Slender	Yes	Yes
Slenderness:		
Pu (kip)	351.74	351.74
Combination	2	2
Cm	0.48	0.47
K	1.00	1.00
δns	1.00	1.00
βd	0.68	0.68
Pc (kip)	5129.96	1282.49
Ig (in^4)	13824.00	3456.00

TRANSVERSE REINFORCEMENT:

Controlling Load Combination: (2) 1.200 D + 1.600 Lp

	LC	Vu (kip)	Vc (kip)	Vs (kip)	ϕ	ϕ (Vc + Vs) (kip)	Ld/Cap
1 Major:	0	1.19	52.87	71.36	0.75	93.17	0.01
1 Minor:	0	1.52	47.06	31.76	0.75	59.12	0.03

TORSION CAPACITY:

Controlling Load Combination: (2) 1.200 D + 1.600 Lp
0.75 Tn (kip-ft) 10.99 Tu (kip-ft) 0.00

COLUMN INFORMATION:

Level Podium
Column Number: 21 Grid Location: (244.23ft-58.52ft)
Size: ***24 x 12** Depth x Width (in) 24.00x12.00
Reinforcement
Longitudinal: **6-#8 (2 x 1)** As (in²) 4.74 (1.65%)
Transverse: **#3@ 4.0" 0'-0"-13'-0"**
Confinement Tie Clear Cover (in) 1.50
Shear Legs Major 2 Shear Legs Minor 2
Longitudinal Bars Max Tension Stress Ratio: 0.57

MATERIAL PROPERTIES:

f'c (ksi): 4.00 fy Long (ksi): 60.00
fct (ksi): 0.00 fyt Trans (ksi): 60.00
Conc. Weight (pcf): 150.01 Conc. Type: NWC
Conc. Modulus (ksi): 3834.80 Reinf. Modulus (ksi): 29000.00

DESIGN PARAMETERS:

	Major	Minor
Unbraced Length (ft)	13.00	13.00
K	1.91	1.91
Braced Against Sidesway	No	No

LONGITUDINAL REINFORCEMENT:

Controlling Load Combination: (2) 1.200 D + 1.600 Lp

Axial		Load (kip)	165.82
Moment	Top	Major(kip-ft)	88.23
		Minor(kip-ft)	-13.27
Moment	Bottom	Major(kip-ft)	-28.00
		Minor(kip-ft)	13.27

Calculated Parameters (Angle = 8.55 degrees): Ld/Cap = 0.42
0.65 Pn(kip): 165.82
0.65 Mn Major(kip-ft): 211.99 0.65 Mn Minor(kip-ft): 31.88

	Major	Minor
Kl/r	43.01	86.02
Slender	Yes	Yes
Slenderness:		
Pu (kip)	165.82	165.82
Combination	2	2
Cm	0.47	0.47
K	1.00	1.00
δns	1.00	1.00
βd	0.69	0.69
Pc (kip)	5076.31	1269.08
Ig (in^4)	13824.00	3456.00

TRANSVERSE REINFORCEMENT:

Controlling Load Combination: (2) 1.200 D + 1.600 Lp

	LC	Vu (kip)	Vc (kip)	Vs (kip)	ϕ	ϕ (Vc + Vs) (kip)	Ld/Cap
1 Major:	0	10.03	42.27	71.36	0.75	85.23	0.12
1 Minor:	0	0.45	37.63	31.76	0.75	52.05	0.01

TORSION CAPACITY:

Controlling Load Combination: (2) 1.200 D + 1.600 Lp
0.75 Tn (kip-ft) 8.24 Tu (kip-ft) 0.00

COLUMN INFORMATION:

Level Podium
Column Number: 20 Grid Location: (243.98ft-147.93ft)
Size: ***24 x 12** Depth x Width (in) 24.00x12.00
Reinforcement
Longitudinal: **6-#8 (2 x 1)** As (in²) 4.74 (1.65%)
Transverse: **#3@ 4.0" 0'-0"-13'-0"**
Confinement Tie Clear Cover (in) 1.50
Shear Legs Major 2 Shear Legs Minor 2
Longitudinal Bars Max Tension Stress Ratio: 0.47

MATERIAL PROPERTIES:

f'c (ksi): 4.00 fy Long (ksi): 60.00
fct (ksi): 0.00 fyt Trans (ksi): 60.00
Conc. Weight (pcf): 150.01 Conc. Type: NWC
Conc. Modulus (ksi): 3834.80 Reinf. Modulus (ksi): 29000.00

DESIGN PARAMETERS:

	Major	Minor
Unbraced Length (ft)	13.00	13.00
K	1.91	1.91
Braced Against Sidesway	No	No

LONGITUDINAL REINFORCEMENT:

Controlling Load Combination: (2) 1.200 D + 1.600 Lp

Axial		Load (kip)	276.53
Moment	Top	Major(kip-ft)	-121.17
		Minor(kip-ft)	-22.12
Moment	Bottom	Major(kip-ft)	39.97
		Minor(kip-ft)	22.12

Calculated Parameters (Angle = 10.35 degrees): Ld/Cap = 0.56
0.65 Pn(kip): 276.53
0.65 Mn Major(kip-ft): 214.78 0.65 Mn Minor(kip-ft): 39.21

	Major	Minor
Kl/r	43.01	86.02
Slender	Yes	Yes
Slenderness:		
Pu (kip)	276.53	276.53
Combination	2	2
Cm	0.47	0.47
K	1.00	1.00
δns	1.00	1.00
βd	0.70	0.70
Pc (kip)	5047.99	1262.00
Ig (in^4)	13824.00	3456.00

TRANSVERSE REINFORCEMENT:

Controlling Load Combination: (2) 1.200 D + 1.600 Lp

	LC	Vu (kip)	Vc (kip)	Vs (kip)	ϕ	ϕ (Vc + Vs) (kip)	Ld/Cap
1 Major:	0	13.71	48.58	71.36	0.75	89.96	0.15
1 Minor:	0	0.78	43.25	31.76	0.75	56.26	0.01

TORSION CAPACITY:

Controlling Load Combination: (2) 1.200 D + 1.600 Lp
0.75 Tn (kip-ft) 9.97 Tu (kip-ft) 0.00

COLUMN INFORMATION:

Level Podium
Column Number: 19 Grid Location: (213.56ft-118.43ft)
Size: ***24 x 12** Depth x Width (in) 24.00x12.00
Reinforcement
Longitudinal: **6-#8 (2 x 1)** As (in²) 4.74 (1.65%)
Transverse: **#3@ 4.0" 0'-0"-13'-0"**
Confinement Tie Clear Cover (in) 1.50
Shear Legs Major 2 Shear Legs Minor 2
Longitudinal Bars Max Tension Stress Ratio: 0.17

MATERIAL PROPERTIES:

f'c (ksi): 4.00 fy Long (ksi): 60.00
fct (ksi): 0.00 fyt Trans (ksi): 60.00
Conc. Weight (pcf): 150.01 Conc. Type: NWC
Conc. Modulus (ksi): 3834.80 Reinf. Modulus (ksi): 29000.00

DESIGN PARAMETERS:

	Major	Minor
Unbraced Length (ft)	13.00	13.00
K	1.91	1.91
Braced Against Sidesway	No	No

LONGITUDINAL REINFORCEMENT:

Controlling Load Combination: (2) 1.200 D + 1.600 Lp

Axial		Load (kip)	373.40
Moment	Top	Major(kip-ft)	41.07
		Minor(kip-ft)	-10.35
Moment	Bottom	Major(kip-ft)	-41.07
		Minor(kip-ft)	3.56

Calculated Parameters (Angle = 4.95 degrees): Ld/Cap = 0.58
0.65 Pn(kip): 373.40
0.65 Mn Major(kip-ft): 227.49 0.65 Mn Minor(kip-ft): 19.70

	Major	Minor
Kl/r	43.01	86.02
Slender	Yes	Yes
Slenderness:		
Pu (kip)	373.40	373.40
Combination	2	2
Cm	0.46	0.46
K	1.00	1.00
δns	1.00	1.00
βd	0.68	0.68
Pc (kip)	5127.60	1281.90
Ig (in^4)	13824.00	3456.00

TRANSVERSE REINFORCEMENT:

Controlling Load Combination: (2) 1.200 D + 1.600 Lp

	LC	Vu (kip)	Vc (kip)	Vs (kip)	ϕ	ϕ (Vc + Vs) (kip)	Ld/Cap
1 Major:	0	2.70	54.10	71.36	0.75	94.10	0.03
1 Minor:	0	1.20	48.16	31.76	0.75	59.94	0.02

TORSION CAPACITY:

Controlling Load Combination: (2) 1.200 D + 1.600 Lp
0.75 Tn (kip-ft) 11.27 Tu (kip-ft) 0.00

COLUMN INFORMATION:

Level Podium
Column Number: 18 Grid Location: (213.56ft-88.52ft)
Size: ***24 x 12** Depth x Width (in) 24.00x12.00
Reinforcement
Longitudinal: **6-#8 (2 x 1)** As (in²) 4.74 (1.65%)
Transverse: **#3@ 4.0" 0'-0"-13'-0"**
Confinement Tie Clear Cover (in) 1.50
Shear Legs Major 2 Shear Legs Minor 2
Longitudinal Bars Max Tension Stress Ratio: 0.00

MATERIAL PROPERTIES:

f'c (ksi): 4.00 fy Long (ksi): 60.00
fct (ksi): 0.00 fyt Trans (ksi): 60.00
Conc. Weight (pcf): 150.01 Conc. Type: NWC
Conc. Modulus (ksi): 3834.80 Reinf. Modulus (ksi): 29000.00

DESIGN PARAMETERS:

	Major	Minor
Unbraced Length (ft)	13.00	13.00
K	1.91	1.91
Braced Against Sidesway	No	No

LONGITUDINAL REINFORCEMENT:

Controlling Load Combination: (2) 1.200 D + 1.600 Lp

Axial		Load (kip)	363.94
Moment	Top	Major(kip-ft)	-40.03
		Minor(kip-ft)	-4.27
Moment	Bottom	Major(kip-ft)	40.03
		Minor(kip-ft)	3.22

Calculated Parameters (Angle = 4.60 degrees): Ld/Cap = 0.56

0.65 Pn(kip): 363.94
0.65 Mn Major(kip-ft): 229.36 0.65 Mn Minor(kip-ft): 18.46

	Major	Minor
Kl/r	43.01	86.02
Slender	Yes	Yes
Slenderness:		
Pu (kip)	363.94	363.94
Combination	2	2
Cm	0.35	0.30
K	1.00	1.00
δns	1.00	1.00
βd	0.68	0.68
Pc (kip)	5130.33	1282.58
Ig (in^4)	13824.00	3456.00

TRANSVERSE REINFORCEMENT:

Controlling Load Combination: (2) 1.200 D + 1.600 Lp

	LC	Vu (kip)	Vc (kip)	Vs (kip)	ϕ	ϕ (Vc + Vs) (kip)	Ld/Cap
1 Major:	0	1.11	53.56	71.36	0.75	93.70	0.01
1 Minor:	0	0.74	47.68	31.76	0.75	59.58	0.01

TORSION CAPACITY:

Controlling Load Combination: (2) 1.200 D + 1.600 Lp
0.75 Tn (kip-ft) 11.15 Tu (kip-ft) 0.00

COLUMN INFORMATION:

Level Podium
Column Number: 17 Grid Location: (213.56ft-58.35ft)
Size: ***24 x 12** Depth x Width (in) 24.00x12.00
Reinforcement
Longitudinal: **6-#8 (2 x 1)** As (in²) 4.74 (1.65%)
Transverse: **#3@ 4.0" 0'-0"-13'-0"**
Confinement Tie Clear Cover (in) 1.50
Shear Legs Major 2 Shear Legs Minor 2
Longitudinal Bars Max Tension Stress Ratio: 0.65

MATERIAL PROPERTIES:

f'c (ksi): 4.00 fy Long (ksi): 60.00
fct (ksi): 0.00 fyt Trans (ksi): 60.00
Conc. Weight (pcf): 150.01 Conc. Type: NWC
Conc. Modulus (ksi): 3834.80 Reinf. Modulus (ksi): 29000.00

DESIGN PARAMETERS:

	Major	Minor
Unbraced Length (ft)	13.00	13.00
K	1.91	1.91
Braced Against Sidesway	No	No

LONGITUDINAL REINFORCEMENT:

Controlling Load Combination: (2) 1.200 D + 1.600 Lp

Axial		Load (kip)	143.65
Moment	Top	Major(kip-ft)	81.64
		Minor(kip-ft)	11.49
Moment	Bottom	Major(kip-ft)	-25.99
		Minor(kip-ft)	-11.49

Calculated Parameters (Angle = 8.01 degrees): Ld/Cap = 0.39

0.65 Pn(kip): 143.65
0.65 Mn Major(kip-ft): 206.72 0.65 Mn Minor(kip-ft): 29.10

	Major	Minor
Kl/r	43.01	86.02
Slender	Yes	Yes
Slenderness:		
Pu (kip)	143.65	143.65
Combination	2	2
Cm	0.47	0.47
K	1.00	1.00
δns	1.00	1.00
βd	0.70	0.70
Pc (kip)	5057.48	1264.37
Ig (in^4)	13824.00	3456.00

TRANSVERSE REINFORCEMENT:

Controlling Load Combination: (2) 1.200 D + 1.600 Lp

	LC	Vu (kip)	Vc (kip)	Vs (kip)	ϕ	ϕ (Vc + Vs) (kip)	Ld/Cap
1 Major:	0	9.30	41.01	71.36	0.75	84.28	0.11
1 Minor:	0	0.22	36.51	31.76	0.75	51.20	0.00

TORSION CAPACITY:

Controlling Load Combination: (2) 1.200 D + 1.600 Lp
0.75 Tn (kip-ft) 7.85 Tu (kip-ft) 0.00

COLUMN INFORMATION:

Level: Podium
Column Number: 16 — Grid Location: (212.98ft-147.93ft)
Size: ***24 x 12** — Depth x Width (in): 24.00x12.00
Reinforcement
Longitudinal: **6-#8 (2 x 1)** — As (in²): 4.74 (1.65%)
Transverse: **#3@ 4.0" 0'-0"-13'-0"**
Confinement: Tie — Clear Cover (in): 1.50
Shear Legs Major: 2 — Shear Legs Minor: 2
Longitudinal Bars Max Tension Stress Ratio: 0.75

MATERIAL PROPERTIES:

f'c (ksi): 4.00 — fy Long (ksi): 60.00
fct (ksi): 0.00 — fyt Trans (ksi): 60.00
Conc. Weight (pcf): 150.01 — Conc. Type: NWC
Conc. Modulus (ksi): 3834.80 — Reinf. Modulus (ksi): 29000.00

DESIGN PARAMETERS:

	Major	Minor
Unbraced Length (ft)	13.00	13.00
K	1.91	1.91
Braced Against Sidesway	No	No

LONGITUDINAL REINFORCEMENT:

Controlling Load Combination: (2) 1.200 D + 1.600 Lp

Axial		Load (kip)	197.08
Moment	Top	Major(kip-ft)	109.64
		Minor(kip-ft)	-33.32
Moment	Bottom	Major(kip-ft)	-36.95
		Minor(kip-ft)	15.77

Calculated Parameters (Angle = 16.91 degrees): Ld/Cap = 0.59

0.65 Pn(kip): 197.08
0.65 Mn Major(kip-ft): 184.49 — 0.65 Mn Minor(kip-ft): 56.07

	Major	Minor
Kl/r	43.01	86.02
Slender	Yes	Yes
Slenderness:		
Pu (kip)	197.08	197.08
Combination	2	2
Cm	0.47	0.47
K	1.00	1.00
δns	1.00	1.00
βd	0.72	0.72
Pc (kip)	5009.39	1252.35
Ig (in^4)	13824.00	3456.00

TRANSVERSE REINFORCEMENT:

Controlling Load Combination: (2) 1.200 D + 1.600 Lp

	LC	Vu (kip)	Vc (kip)	Vs (kip)	ϕ	ϕ (Vc + Vs) (kip)	Ld/Cap
1 Major:	0	12.48	44.06	71.36	0.75	86.56	0.14
1 Minor:	0	3.82	39.22	31.76	0.75	53.23	0.07

TORSION CAPACITY:

Controlling Load Combination: (2) 1.200 D + 1.600 Lp
0.75 Tn (kip-ft): 8.77 — Tu (kip-ft): 0.00

COLUMN INFORMATION:

Level: Podium
Column Number: 15 — Grid Location: (182.89ft-118.43ft)
Size: ***24 x 12** — Depth x Width (in): 24.00x12.00
Reinforcement
Longitudinal: **6-#8 (2 x 1)** — As (in²): 4.74 (1.65%)
Transverse: **#3@ 4.0" 0'-0"-13'-0"**
Confinement: Tie — Clear Cover (in): 1.50
Shear Legs Major: 2 — Shear Legs Minor: 2
Longitudinal Bars Max Tension Stress Ratio: 0.42

MATERIAL PROPERTIES:

f'c (ksi): 4.00 — fy Long (ksi): 60.00
fct (ksi): 0.00 — fyt Trans (ksi): 60.00
Conc. Weight (pcf): 150.01 — Conc. Type: NWC
Conc. Modulus (ksi): 3834.80 — Reinf. Modulus (ksi): 29000.00

DESIGN PARAMETERS:

	Major	Minor
Unbraced Length (ft)	13.00	13.00
K	1.91	1.91
Braced Against Sidesway	No	No

LONGITUDINAL REINFORCEMENT:

Controlling Load Combination: (2) 1.200 D + 1.600 Lp

Axial		Load (kip)	283.20
Moment	Top	Major(kip-ft)	106.03
		Minor(kip-ft)	22.66
Moment	Bottom	Major(kip-ft)	-33.77
		Minor(kip-ft)	-22.66

Calculated Parameters (Angle = 12.06 degrees): Ld/Cap = 0.51

0.65 Pn(kip): 283.20
0.65 Mn Major(kip-ft): 206.67 — 0.65 Mn Minor(kip-ft): 44.16

	Major	Minor
Kl/r	43.01	86.02
Slender	Yes	Yes
Slenderness:		
Pu (kip)	283.20	283.20
Combination	2	2
Cm	0.47	0.50
K	1.00	1.00
δns	1.00	1.00
βd	0.68	0.68
Pc (kip)	5110.11	1277.53
Ig (in^4)	13824.00	3456.00

TRANSVERSE REINFORCEMENT:

Controlling Load Combination: (2) 1.200 D + 1.600 Lp

	LC	Vu (kip)	Vc (kip)	Vs (kip)	ϕ	ϕ (Vc + Vs) (kip)	Ld/Cap
1 Major:	0	12.08	48.96	71.36	0.75	90.24	0.13
1 Minor:	0	0.07	43.59	31.76	0.75	56.51	0.00

TORSION CAPACITY:

Controlling Load Combination: (2) 1.200 D + 1.600 Lp
0.75 Tn (kip-ft): 10.07 — Tu (kip-ft): 0.00

COLUMN INFORMATION:

Level Podium
Column Number: 14 Grid Location: (182.89ft-88.52ft)
Size: ***24 x 12** Depth x Width (in) 24.00x12.00
Reinforcement
Longitudinal: **6-#8 (2 x 1)** As (in²) 4.74 (1.65%)
Transverse: **#3@ 4.0" 0'-0"-13'-0"**
Confinement Tie Clear Cover (in) 1.50
Shear Legs Major 2 Shear Legs Minor 2
Longitudinal Bars Max Tension Stress Ratio: 0.43

MATERIAL PROPERTIES:

f'c (ksi): 4.00 fy Long (ksi): 60.00
fct (ksi): 0.00 fyt Trans (ksi): 60.00
Conc. Weight (pcf): 150.01 Conc. Type: NWC
Conc. Modulus (ksi): 3834.80 Reinf. Modulus (ksi): 29000.00

DESIGN PARAMETERS:

	Major	Minor
Unbraced Length (ft)	13.00	13.00
K	1.91	1.91
Braced Against Sidesway	No	No

LONGITUDINAL REINFORCEMENT:

Controlling Load Combination: (2) 1.200 D + 1.600 Lp

Axial		Load (kip)	287.93
Moment	Top	Major(kip-ft)	-108.25
		Minor(kip-ft)	23.03
Moment	Bottom	Major(kip-ft)	33.47
		Minor(kip-ft)	-23.03

Calculated Parameters (Angle = 12.01 degrees): Ld/Cap = 0.52
0.65 Pn(kip): 287.93
0.65 Mn Major(kip-ft): 206.48 0.65 Mn Minor(kip-ft): 43.94

	Major	Minor
Kl/r	43.01	86.02
Slender	Yes	Yes
Slenderness:		
Pu (kip)	287.93	287.93
Combination	2	2
Cm	0.48	0.47
K	1.00	1.00
δns	1.00	1.00
βd	0.68	0.68
Pc (kip)	5108.07	1277.02
Ig (in^4)	13824.00	3456.00

TRANSVERSE REINFORCEMENT:

Controlling Load Combination: (2) 1.200 D + 1.600 Lp

	LC	Vu (kip)	Vc (kip)	Vs (kip)	ϕ	ϕ (Vc + Vs) (kip)	Ld/Cap
1 Major:	0	12.23	49.23	71.36	0.75	90.45	0.14
1 Minor:	0	0.46	43.83	31.76	0.75	56.69	0.01

TORSION CAPACITY:

Controlling Load Combination: (2) 1.200 D + 1.600 Lp
0.75 Tn (kip-ft) 10.13 Tu (kip-ft) 0.00

COLUMN INFORMATION:

Level Podium
Column Number: 13 Grid Location: (182.89ft-58.52ft)
Size: ***24 x 12** Depth x Width (in) 24.00x12.00
Reinforcement
Longitudinal: **6-#8 (2 x 1)** As (in²) 4.74 (1.65%)
Transverse: **#3@ 4.0" 0'-0"-13'-0"**
Confinement Tie Clear Cover (in) 1.50
Shear Legs Major 2 Shear Legs Minor 2
Longitudinal Bars Max Tension Stress Ratio: 0.58

MATERIAL PROPERTIES:

f'c (ksi): 4.00 fy Long (ksi): 60.00
fct (ksi): 0.00 fyt Trans (ksi): 60.00
Conc. Weight (pcf): 150.01 Conc. Type: NWC
Conc. Modulus (ksi): 3834.80 Reinf. Modulus (ksi): 29000.00

DESIGN PARAMETERS:

	Major	Minor
Unbraced Length (ft)	13.00	13.00
K	1.91	1.91
Braced Against Sidesway	No	No

LONGITUDINAL REINFORCEMENT:

Controlling Load Combination: (2) 1.200 D + 1.600 Lp

Axial		Load (kip)	219.18
Moment	Top	Major(kip-ft)	103.09
		Minor(kip-ft)	28.27
Moment	Bottom	Major(kip-ft)	-32.95
		Minor(kip-ft)	-17.53

Calculated Parameters (Angle = 15.33 degrees): Ld/Cap = 0.55
0.65 Pn(kip): 219.18
0.65 Mn Major(kip-ft): 188.25 0.65 Mn Minor(kip-ft): 51.62

	Major	Minor
Kl/r	43.01	86.02
Slender	Yes	Yes
Slenderness:		
Pu (kip)	219.18	219.18
Combination	2	2
Cm	0.47	0.47
K	1.00	1.00
δns	1.00	1.00
βd	0.69	0.69
Pc (kip)	5083.21	1270.80
Ig (in^4)	13824.00	3456.00

TRANSVERSE REINFORCEMENT:

Controlling Load Combination: (2) 1.200 D + 1.600 Lp

	LC	Vu (kip)	Vc (kip)	Vs (kip)	ϕ	ϕ (Vc + Vs) (kip)	Ld/Cap
1 Major:	0	11.74	45.31	71.36	0.75	87.51	0.13
1 Minor:	0	3.25	40.34	31.76	0.75	54.08	0.06

TORSION CAPACITY:

Controlling Load Combination: (2) 1.200 D + 1.600 Lp
0.75 Tn (kip-ft) 9.12 Tu (kip-ft) 0.00

COLUMN INFORMATION:

Level Podium
Column Number: 12 Grid Location: (152.23ft-118.43ft)
Size: ***24 x 12** Depth x Width (in) 24.00x12.00

Reinforcement

Longitudinal: **6-#8 (2 x 1)** As (in²) 4.74 (1.65%)
Transverse: **#3@ 4.0" 0'-0"-13'-0"**
Confinement Tie Clear Cover (in) 1.50
Shear Legs Major 2 Shear Legs Minor 2
Longitudinal Bars Max Tension Stress Ratio: 0.43

MATERIAL PROPERTIES:

f'c (ksi): 4.00 fy Long (ksi): 60.00
fct (ksi): 0.00 fyt Trans (ksi): 60.00
Conc. Weight (pcf): 150.01 Conc. Type: NWC
Conc. Modulus (ksi): 3834.80 Reinf. Modulus (ksi): 29000.00

DESIGN PARAMETERS:

	Major	Minor
Unbraced Length (ft)	13.00	13.00
K	1.91	1.91
Braced Against Sidesway	No	No

LONGITUDINAL REINFORCEMENT:

Controlling Load Combination: (2) 1.200 D + 1.600 Lp

Axial		Load (kip)	281.96
Moment	Top	Major(kip-ft)	103.69
		Minor(kip-ft)	28.81
Moment	Bottom	Major(kip-ft)	-49.99
		Minor(kip-ft)	28.81

Calculated Parameters (Angle = 15.53 degrees): Ld/Cap = 0.54

0.65 Pn(kip): 281.96
0.65 Mn Major(kip-ft): 190.61 0.65 Mn Minor(kip-ft): 52.95

	Major	Minor
Kl/r	43.01	86.02
Slender	Yes	Yes

Slenderness:

Pu (kip)	281.96	281.96
Combination	2	2
Cm	0.41	0.90
K	1.00	1.00
δns	1.00	1.28
βd	0.68	0.68
Pc (kip)	5108.98	1277.24
Ig (in^4)	13824.00	3456.00

TRANSVERSE REINFORCEMENT:

Controlling Load Combination: (2) 1.200 D + 1.600 Lp

	LC	Vu (kip)	Vc (kip)	Vs (kip)	ϕ	ϕ (Vc + Vs) (kip)	Ld/Cap
1 Major:	0	11.82	48.89	71.36	0.75	90.19	0.13
1 Minor:	0	0.00	43.52	31.76	0.75	56.46	0.00

TORSION CAPACITY:

Controlling Load Combination: (2) 1.200 D + 1.600 Lp
0.75 Tn (kip-ft) 10.05 Tu (kip-ft) 0.00

COLUMN INFORMATION:

Level Podium
Column Number: 11 Grid Location: (152.23ft-88.52ft)
Size: ***24 x 12** Depth x Width (in) 24.00x12.00

Reinforcement

Longitudinal: **6-#8 (2 x 1)** As (in²) 4.74 (1.65%)
Transverse: **#3@ 4.0" 0'-0"-13'-0"**
Confinement Tie Clear Cover (in) 1.50
Shear Legs Major 2 Shear Legs Minor 2
Longitudinal Bars Max Tension Stress Ratio: 0.45

MATERIAL PROPERTIES:

f'c (ksi): 4.00 fy Long (ksi): 60.00
fct (ksi): 0.00 fyt Trans (ksi): 60.00
Conc. Weight (pcf): 150.01 Conc. Type: NWC
Conc. Modulus (ksi): 3834.80 Reinf. Modulus (ksi): 29000.00

DESIGN PARAMETERS:

	Major	Minor
Unbraced Length (ft)	13.00	13.00
K	1.91	1.91
Braced Against Sidesway	No	No

LONGITUDINAL REINFORCEMENT:

Controlling Load Combination: (2) 1.200 D + 1.600 Lp

Axial		Load (kip)	296.19
Moment	Top	Major(kip-ft)	-117.88
		Minor(kip-ft)	23.70
Moment	Bottom	Major(kip-ft)	36.41
		Minor(kip-ft)	-23.70

Calculated Parameters (Angle = 11.37 degrees): Ld/Cap = 0.57

0.65 Pn(kip): 296.19
0.65 Mn Major(kip-ft): 206.49 0.65 Mn Minor(kip-ft): 41.51

	Major	Minor
Kl/r	43.01	86.02
Slender	Yes	Yes

Slenderness:

Pu (kip)	296.19	296.19
Combination	2	2
Cm	0.48	0.52
K	1.00	1.00
δns	1.00	1.00
βd	0.68	0.68
Pc (kip)	5109.67	1277.42
Ig (in^4)	13824.00	3456.00

TRANSVERSE REINFORCEMENT:

Controlling Load Combination: (2) 1.200 D + 1.600 Lp

	LC	Vu (kip)	Vc (kip)	Vs (kip)	ϕ	ϕ (Vc + Vs) (kip)	Ld/Cap
1 Major:	0	13.32	49.70	71.36	0.75	90.80	0.15
1 Minor:	0	0.02	44.24	31.76	0.75	57.01	0.00

TORSION CAPACITY:

Controlling Load Combination: (2) 1.200 D + 1.600 Lp
0.75 Tn (kip-ft) 10.25 Tu (kip-ft) 0.00

COLUMN INFORMATION:

Level: Podium
Column Number: 10 — Grid Location: (152.23ft-58.52ft)
Size: ***24 x 12** — Depth x Width (in): 24.00x12.00
Reinforcement
Longitudinal: **6-#8 (2 x 1)** — As (in²): 4.74 (1.65%)
Transverse: **#3@ 4.0" 0'-0"-13'-0"**
Confinement: Tie — Clear Cover (in): 1.50
Shear Legs Major: 2 — Shear Legs Minor: 2
Longitudinal Bars Max Tension Stress Ratio: 0.31

MATERIAL PROPERTIES:

f'c (ksi): 4.00 — fy Long (ksi): 60.00
fct (ksi): 0.00 — fyt Trans (ksi): 60.00
Conc. Weight (pcf): 150.01 — Conc. Type: NWC
Conc. Modulus (ksi): 3834.80 — Reinf. Modulus (ksi): 29000.00

DESIGN PARAMETERS:

	Major	Minor
Unbraced Length (ft)	13.00	13.00
K	1.91	1.91
Braced Against Sidesway	No	No

LONGITUDINAL REINFORCEMENT:

Controlling Load Combination: (2) 1.200 D + 1.600 Lp

Axial		Load (kip)	342.59
Moment	Top	Major(kip-ft)	94.93
		Minor(kip-ft)	-1.16
Moment	Bottom	Major(kip-ft)	-37.68
		Minor(kip-ft)	0.34

Calculated Parameters (Angle = 0.70 degrees): Ld/Cap = 0.53
0.65 Pn(kip): 342.59
0.65 Mn Major(kip-ft): 242.60 — 0.65 Mn Minor(kip-ft): 2.96

	Major	Minor
Kl/r	43.01	86.02
Slender	Yes	Yes
Slenderness:		
Pu (kip)	342.59	342.59
Combination	2	2
Cm	0.47	0.48
K	1.00	1.00
δns	1.00	1.00
βd	0.68	0.68
Pc (kip)	5127.78	1281.95
Ig (in^4)	13824.00	3456.00

TRANSVERSE REINFORCEMENT:

Controlling Load Combination: (2) 1.200 D + 1.600 Lp

	LC	Vu (kip)	Vc (kip)	Vs (kip)	ϕ	ϕ (Vc + Vs) (kip)	Ld/Cap
1 Major:	0	10.83	52.35	71.36	0.75	92.78	0.12
1 Minor:	0	0.13	46.60	31.76	0.75	58.77	0.00

TORSION CAPACITY:

Controlling Load Combination: (2) 1.200 D + 1.600 Lp
0.75 Tn (kip-ft): 10.87 — Tu (kip-ft): 0.00

COLUMN INFORMATION:

Level: Podium
Column Number: 9 — Grid Location: (121.56ft-118.43ft)
Size: ***24 x 12** — Depth x Width (in): 24.00x12.00
Reinforcement
Longitudinal: **6-#8 (2 x 1)** — As (in²): 4.74 (1.65%)
Transverse: **#3@ 4.0" 0'-0"-13'-0"**
Confinement: Tie — Clear Cover (in): 1.50
Shear Legs Major: 2 — Shear Legs Minor: 2
Longitudinal Bars Max Tension Stress Ratio: 0.00

MATERIAL PROPERTIES:

f'c (ksi): 4.00 — fy Long (ksi): 60.00
fct (ksi): 0.00 — fyt Trans (ksi): 60.00
Conc. Weight (pcf): 150.01 — Conc. Type: NWC
Conc. Modulus (ksi): 3834.80 — Reinf. Modulus (ksi): 29000.00

DESIGN PARAMETERS:

	Major	Minor
Unbraced Length (ft)	13.00	13.00
K	1.91	1.91
Braced Against Sidesway	No	No

LONGITUDINAL REINFORCEMENT:

Controlling Load Combination: (2) 1.200 D + 1.600 Lp

Axial		Load (kip)	350.83
Moment	Top	Major(kip-ft)	38.59
		Minor(kip-ft)	0.38
Moment	Bottom	Major(kip-ft)	-38.59
		Minor(kip-ft)	-0.04

Calculated Parameters (Angle = 0.57 degrees): Ld/Cap = 0.54
0.65 Pn(kip): 350.83
0.65 Mn Major(kip-ft): 240.92 — 0.65 Mn Minor(kip-ft): 2.39

	Major	Minor
Kl/r	43.01	86.02
Slender	Yes	Yes
Slenderness:		
Pu (kip)	350.83	350.83
Combination	2	2
Cm	0.42	0.56
K	1.00	1.00
δns	1.00	1.00
βd	0.68	0.68
Pc (kip)	5128.54	1282.13
Ig (in^4)	13824.00	3456.00

TRANSVERSE REINFORCEMENT:

Controlling Load Combination: (2) 1.200 D + 1.600 Lp

	LC	Vu (kip)	Vc (kip)	Vs (kip)	ϕ	ϕ (Vc + Vs) (kip)	Ld/Cap
1 Major:	0	0.76	52.82	71.36	0.75	93.13	0.01
1 Minor:	0	0.04	47.02	31.76	0.75	59.08	0.00

TORSION CAPACITY:

Controlling Load Combination: (2) 1.200 D + 1.600 Lp
0.75 Tn (kip-ft): 10.98 — Tu (kip-ft): 0.00

COLUMN INFORMATION:

Level Podium
Column Number: 8 Grid Location: (121.56ft-88.52ft)
Size: ***24 x 12** Depth x Width (in) 24.00x12.00
Reinforcement
Longitudinal: **6-#8 (2 x 1)** As (in²) 4.74 (1.65%)
Transverse: **#3@ 4.0" 0'-0"-13'-0"**
Confinement Tie Clear Cover (in) 1.50
Shear Legs Major 2 Shear Legs Minor 2
Longitudinal Bars Max Tension Stress Ratio: 0.00

MATERIAL PROPERTIES:

f'c (ksi): 4.00 fy Long (ksi): 60.00
fct (ksi): 0.00 fyt Trans (ksi): 60.00
Conc. Weight (pcf): 150.01 Conc. Type: NWC
Conc. Modulus (ksi): 3834.80 Reinf. Modulus (ksi): 29000.00

DESIGN PARAMETERS:

	Major	Minor
Unbraced Length (ft)	13.00	13.00
K	1.91	1.91
Braced Against Sidesway	No	No

LONGITUDINAL REINFORCEMENT:

Controlling Load Combination: (2) 1.200 D + 1.600 Lp

Axial		Load (kip)	365.11
Moment	Top	Major(kip-ft)	-40.16
		Minor(kip-ft)	-0.81
Moment	Bottom	Major(kip-ft)	40.16
		Minor(kip-ft)	0.62

Calculated Parameters (Angle = 0.88 degrees): Ld/Cap = 0.56
0.65 Pn(kip): 365.11
0.65 Mn Major(kip-ft): 237.75 0.65 Mn Minor(kip-ft): 3.66

	Major	Minor
Kl/r	43.01	86.02
Slender	Yes	Yes
Slenderness:		
Pu (kip)	365.11	365.11
Combination	2	2
Cm	0.34	0.29
K	1.00	1.00
δns	1.00	1.00
βd	0.68	0.68
Pc (kip)	5130.23	1282.56
Ig (in^4)	13824.00	3456.00

TRANSVERSE REINFORCEMENT:

Controlling Load Combination: (2) 1.200 D + 1.600 Lp

	LC	Vu (kip)	Vc (kip)	Vs (kip)	ϕ	ϕ (Vc + Vs) (kip)	Ld/Cap
1 Major:	0	2.80	53.63	71.36	0.75	93.75	0.03
1 Minor:	0	0.14	47.74	31.76	0.75	59.63	0.00

TORSION CAPACITY:

Controlling Load Combination: (2) 1.200 D + 1.600 Lp
0.75 Tn (kip-ft) 11.16 Tu (kip-ft) 0.00

COLUMN INFORMATION:

Level Podium
Column Number: 7 Grid Location: (121.56ft-58.52ft)
Size: ***24 x 12** Depth x Width (in) 24.00x12.00
Reinforcement
Longitudinal: **6-#8 (2 x 1)** As (in²) 4.74 (1.65%)
Transverse: **#3@ 4.0" 0'-0"-13'-0"**
Confinement Tie Clear Cover (in) 1.50
Shear Legs Major 2 Shear Legs Minor 2
Longitudinal Bars Max Tension Stress Ratio: 0.34

MATERIAL PROPERTIES:

f'c (ksi): 4.00 fy Long (ksi): 60.00
fct (ksi): 0.00 fyt Trans (ksi): 60.00
Conc. Weight (pcf): 150.01 Conc. Type: NWC
Conc. Modulus (ksi): 3834.80 Reinf. Modulus (ksi): 29000.00

DESIGN PARAMETERS:

	Major	Minor
Unbraced Length (ft)	13.00	13.00
K	1.91	1.91
Braced Against Sidesway	No	No

LONGITUDINAL REINFORCEMENT:

Controlling Load Combination: (2) 1.200 D + 1.600 Lp

Axial		Load (kip)	316.24
Moment	Top	Major(kip-ft)	97.12
		Minor(kip-ft)	-25.30
Moment	Bottom	Major(kip-ft)	-31.57
		Minor(kip-ft)	25.30

Calculated Parameters (Angle = 14.60 degrees): Ld/Cap = 0.50
0.65 Pn(kip): 316.24
0.65 Mn Major(kip-ft): 195.82 0.65 Mn Minor(kip-ft): 51.01

	Major	Minor
Kl/r	43.01	86.02
Slender	Yes	Yes
Slenderness:		
Pu (kip)	316.24	316.24
Combination	2	2
Cm	0.47	0.46
K	1.00	1.00
δns	1.00	1.00
βd	0.68	0.68
Pc (kip)	5127.88	1281.97
Ig (in^4)	13824.00	3456.00

TRANSVERSE REINFORCEMENT:

Controlling Load Combination: (2) 1.200 D + 1.600 Lp

	LC	Vu (kip)	Vc (kip)	Vs (kip)	ϕ	ϕ (Vc + Vs) (kip)	Ld/Cap
1 Major:	0	11.09	50.85	71.36	0.75	91.66	0.12
1 Minor:	0	0.17	45.26	31.76	0.75	57.77	0.00

TORSION CAPACITY:

Controlling Load Combination: (2) 1.200 D + 1.600 Lp
0.75 Tn (kip-ft) 10.52 Tu (kip-ft) 0.00

COLUMN INFORMATION:

Level Podium
Column Number: 6 Grid Location: (92.23ft-118.43ft)
Size: ***24 x 12** Depth x Width (in) 24.00x12.00
Reinforcement
Longitudinal: **6-#8 (2 x 1)** As (in²) 4.74 (1.65%)
Transverse: **#3@ 4.0" 0'-0"-13'-0"**
Confinement Tie Clear Cover (in) 1.50
Shear Legs Major 2 Shear Legs Minor 2
Longitudinal Bars Max Tension Stress Ratio: 0.00

MATERIAL PROPERTIES:

f'c (ksi): 4.00 fy Long (ksi): 60.00
fct (ksi): 0.00 fyt Trans (ksi): 60.00
Conc. Weight (pcf): 150.01 Conc. Type: NWC
Conc. Modulus (ksi): 3834.80 Reinf. Modulus (ksi): 29000.00

DESIGN PARAMETERS:

	Major	Minor
Unbraced Length (ft)	13.00	13.00
K	1.91	1.91
Braced Against Sidesway	No	No

LONGITUDINAL REINFORCEMENT:

Controlling Load Combination: (2) 1.200 D + 1.600 Lp

Axial		Load (kip)	341.30
Moment	Top	Major(kip-ft)	37.54
		Minor(kip-ft)	-6.69
Moment	Bottom	Major(kip-ft)	-37.54
		Minor(kip-ft)	2.25

Calculated Parameters (Angle = 3.43 degrees): Ld/Cap = 0.53
0.65 Pn(kip): 341.30
0.65 Mn Major(kip-ft): 233.20 0.65 Mn Minor(kip-ft): 13.99

	Major	Minor
Kl/r	43.01	86.02
Slender	Yes	Yes
Slenderness:		
Pu (kip)	341.30	341.30
Combination	2	2
Cm	0.44	0.47
K	1.00	1.00
δns	1.00	1.00
βd	0.68	0.68
Pc (kip)	5127.88	1281.97
Ig (in^4)	13824.00	3456.00

TRANSVERSE REINFORCEMENT:

Controlling Load Combination: (2) 1.200 D + 1.600 Lp

	LC	Vu (kip)	Vc (kip)	Vs (kip)	ϕ	ϕ (Vc + Vs) (kip)	Ld/Cap
1 Major:	0	1.36	52.27	71.36	0.75	92.73	0.01
1 Minor:	0	0.78	46.53	31.76	0.75	58.72	0.01

TORSION CAPACITY:

Controlling Load Combination: (2) 1.200 D + 1.600 Lp
0.75 Tn (kip-ft) 10.86 Tu (kip-ft) 0.00

COLUMN INFORMATION:

Level Podium
Column Number: 5 Grid Location: (92.23ft-88.52ft)
Size: ***24 x 12** Depth x Width (in) 24.00x12.00
Reinforcement
Longitudinal: **6-#8 (2 x 1)** As (in²) 4.74 (1.65%)
Transverse: **#3@ 4.0" 0'-0"-13'-0"**
Confinement Tie Clear Cover (in) 1.50
Shear Legs Major 2 Shear Legs Minor 2
Longitudinal Bars Max Tension Stress Ratio: 0.00

MATERIAL PROPERTIES:

f'c (ksi): 4.00 fy Long (ksi): 60.00
fct (ksi): 0.00 fyt Trans (ksi): 60.00
Conc. Weight (pcf): 150.01 Conc. Type: NWC
Conc. Modulus (ksi): 3834.80 Reinf. Modulus (ksi): 29000.00

DESIGN PARAMETERS:

	Major	Minor
Unbraced Length (ft)	13.00	13.00
K	1.91	1.91
Braced Against Sidesway	No	No

LONGITUDINAL REINFORCEMENT:

Controlling Load Combination: (2) 1.200 D + 1.600 Lp

Axial		Load (kip)	347.15
Moment	Top	Major(kip-ft)	-38.19
		Minor(kip-ft)	-7.33
Moment	Bottom	Major(kip-ft)	38.19
		Minor(kip-ft)	2.43

Calculated Parameters (Angle = 3.64 degrees): Ld/Cap = 0.54
0.65 Pn(kip): 347.15
0.65 Mn Major(kip-ft): 232.31 0.65 Mn Minor(kip-ft): 14.78

	Major	Minor
Kl/r	43.01	86.02
Slender	Yes	Yes
Slenderness:		
Pu (kip)	347.15	347.15
Combination	2	2
Cm	0.49	0.47
K	1.00	1.00
δns	1.00	1.00
βd	0.68	0.68
Pc (kip)	5129.25	1282.31
Ig (in^4)	13824.00	3456.00

TRANSVERSE REINFORCEMENT:

Controlling Load Combination: (2) 1.200 D + 1.600 Lp

	LC	Vu (kip)	Vc (kip)	Vs (kip)	ϕ	ϕ (Vc + Vs) (kip)	Ld/Cap
1 Major:	0	2.05	52.61	71.36	0.75	92.98	0.02
1 Minor:	0	0.85	46.83	31.76	0.75	58.94	0.01

TORSION CAPACITY:

Controlling Load Combination: (2) 1.200 D + 1.600 Lp
0.75 Tn (kip-ft) 10.93 Tu (kip-ft) 0.00

COLUMN INFORMATION:

Level Podium
Column Number: 4 Grid Location: (92.23ft-58.52ft)
Size: ***24 x 12** Depth x Width (in) 24.00x12.00
Reinforcement
Longitudinal: **6-#8 (2 x 1)** As (in²) 4.74 (1.65%)
Transverse: **#3@ 4.0" 0'-0"-13'-0"**
Confinement Tie Clear Cover (in) 1.50
Shear Legs Major 2 Shear Legs Minor 2
Longitudinal Bars Max Tension Stress Ratio: 0.26

MATERIAL PROPERTIES:

f'c (ksi): 4.00 fy Long (ksi): 60.00
fct (ksi): 0.00 fyt Trans (ksi): 60.00
Conc. Weight (pcf): 150.01 Conc. Type: NWC
Conc. Modulus (ksi): 3834.80 Reinf. Modulus (ksi): 29000.00

DESIGN PARAMETERS:

	Major	Minor
Unbraced Length (ft)	13.00	13.00
K	1.91	1.91
Braced Against Sidesway	No	No

LONGITUDINAL REINFORCEMENT:

Controlling Load Combination: (2) 1.200 D + 1.600 Lp

Axial		Load (kip)	290.70
Moment	Top	Major(kip-ft)	70.17
		Minor(kip-ft)	-17.48
Moment	Bottom	Major(kip-ft)	-31.98
		Minor(kip-ft)	5.80

Calculated Parameters (Angle = 10.29 degrees): Ld/Cap = 0.45
0.65 Pn(kip): 290.70
0.65 Mn Major(kip-ft): 214.25 0.65 Mn Minor(kip-ft): 38.89

	Major	Minor
Kl/r	43.01	86.02
Slender	Yes	Yes
Slenderness:		
Pu (kip)	290.70	290.70
Combination	2	2
Cm	0.47	0.47
K	1.00	1.00
δns	1.00	1.00
βd	0.68	0.68
Pc (kip)	5122.26	1280.56
Ig (in^4)	13824.00	3456.00

TRANSVERSE REINFORCEMENT:

Controlling Load Combination: (2) 1.200 D + 1.600 Lp

	LC	Vu (kip)	Vc (kip)	Vs (kip)	ϕ	ϕ (Vc + Vs) (kip)	Ld/Cap
1 Major:	0	8.04	49.39	71.36	0.75	90.56	0.09
1 Minor:	0	2.01	43.97	31.76	0.75	56.80	0.04

TORSION CAPACITY:

Controlling Load Combination: (2) 1.200 D + 1.600 Lp
0.75 Tn (kip-ft) 10.17 Tu (kip-ft) 0.00

COLUMN INFORMATION:

Level Podium
Column Number: 3 Grid Location: (71.89ft-58.35ft)
Size: ***24 x 12** Depth x Width (in) 24.00x12.00
Reinforcement
Longitudinal: **6-#8 (2 x 1)** As (in²) 4.74 (1.65%)
Transverse: **#3@ 4.0" 0'-0"-13'-0"**
Confinement Tie Clear Cover (in) 1.50
Shear Legs Major 2 Shear Legs Minor 2
Longitudinal Bars Max Tension Stress Ratio: 1.00

MATERIAL PROPERTIES:

f'c (ksi): 4.00 fy Long (ksi): 60.00
fct (ksi): 0.00 fyt Trans (ksi): 60.00
Conc. Weight (pcf): 150.01 Conc. Type: NWC
Conc. Modulus (ksi): 3834.80 Reinf. Modulus (ksi): 29000.00

DESIGN PARAMETERS:

	Major	Minor
Unbraced Length (ft)	13.00	13.00
K	1.91	1.91
Braced Against Sidesway	No	No

LONGITUDINAL REINFORCEMENT:

Controlling Load Combination: (2) 1.200 D + 1.600 Lp

Axial		Load (kip)	71.41
Moment	Top	Major(kip-ft)	52.24
		Minor(kip-ft)	-19.72
Moment	Bottom	Major(kip-ft)	-17.77
		Minor(kip-ft)	6.56

Calculated Parameters (Angle = 20.68 degrees): Ld/Cap = 0.36
0.66 Pn(kip): 71.41
0.66 Mn Major(kip-ft): 146.87 0.66 Mn Minor(kip-ft): 55.45

	Major	Minor
Kl/r	43.01	86.02
Slender	Yes	Yes
Slenderness:		
Pu (kip)	71.41	71.41
Combination	2	2
Cm	0.46	0.47
K	1.00	1.00
δns	1.00	1.00
βd	0.71	0.71
Pc (kip)	5021.49	1255.37
Ig (in^4)	13824.00	3456.00

TRANSVERSE REINFORCEMENT:

Controlling Load Combination: (2) 1.200 D + 1.600 Lp

	LC	Vu (kip)	Vc (kip)	Vs (kip)	ϕ	ϕ (Vc + Vs) (kip)	Ld/Cap
1 Major:	0	6.01	36.89	71.36	0.75	81.19	0.07
1 Minor:	0	2.27	32.84	31.76	0.75	48.45	0.05

TORSION CAPACITY:

Controlling Load Combination: (2) 1.200 D + 1.600 Lp
0.75 Tn (kip-ft) 6.41 Tu (kip-ft) 0.00

COLUMN INFORMATION:

Level Podium
Column Number: 2 Grid Location: (66.56ft-147.43ft)
Size: ***24 x 12** Depth x Width (in) 24.00x12.00
Reinforcement
Longitudinal: **6-#8 (2 x 1)** As (in²) 4.74 (1.65%)
Transverse: **#3@ 4.0" 0'-0"-13'-0"**
Confinement Tie Clear Cover (in) 1.50
Shear Legs Major 2 Shear Legs Minor 2
Longitudinal Bars Max Tension Stress Ratio: 1.00

MATERIAL PROPERTIES:

f'c (ksi): 4.00 fy Long (ksi): 60.00
fct (ksi): 0.00 fyt Trans (ksi): 60.00
Conc. Weight (pcf): 150.01 Conc. Type: NWC
Conc. Modulus (ksi): 3834.80 Reinf. Modulus (ksi): 29000.00

DESIGN PARAMETERS:

	Major	Minor
Unbraced Length (ft)	13.00	13.00
K	1.91	1.91
Braced Against Sidesway	No	No

LONGITUDINAL REINFORCEMENT:

Controlling Load Combination: (2) 1.200 D + 1.600 Lp

Axial		Load (kip)	62.44
Moment	Top	Major(kip-ft)	-80.27
		Minor(kip-ft)	-5.00
Moment	Bottom	Major(kip-ft)	25.94
		Minor(kip-ft)	5.00

Calculated Parameters (Angle = 3.56 degrees): Ld/Cap = 0.38

0.76 Pn(kip): 62.44
0.76 Mn Major(kip-ft): 213.82 0.76 Mn Minor(kip-ft): 13.31

	Major	Minor
Kl/r	43.01	86.02
Slender	Yes	Yes
Slenderness:		
Pu (kip)	62.44	62.44
Combination	2	2
Cm	0.47	0.45
K	1.00	1.00
δns	1.00	1.00
βd	0.75	0.75
Pc (kip)	4916.77	1229.19
Ig (in^4)	13824.00	3456.00

TRANSVERSE REINFORCEMENT:

Controlling Load Combination: (2) 1.200 D + 1.600 Lp

	LC	Vu (kip)	Vc (kip)	Vs (kip)	ϕ	ϕ (Vc + Vs) (kip)	Ld/Cap
1 Major:	0	9.02	36.38	71.36	0.75	80.81	0.11
1 Minor:	0	0.40	32.39	31.76	0.75	48.11	0.01

TORSION CAPACITY:

Controlling Load Combination: (2) 1.200 D + 1.600 Lp
0.75 Tn (kip-ft) 6.21 Tu (kip-ft) 0.00

COLUMN INFORMATION:

Level Podium
Column Number: 1 Grid Location: (66.56ft-59.85ft)
Size: ***24 x 12** Depth x Width (in) 24.00x12.00
Reinforcement
Longitudinal: **6-#8 (2 x 1)** As (in²) 4.74 (1.65%)
Transverse: **#3@ 4.0" 0'-0"-13'-0"**
Confinement Tie Clear Cover (in) 1.50
Shear Legs Major 2 Shear Legs Minor 2
Longitudinal Bars Max Tension Stress Ratio: 1.00

MATERIAL PROPERTIES:

f'c (ksi): 4.00 fy Long (ksi): 60.00
fct (ksi): 0.00 fyt Trans (ksi): 60.00
Conc. Weight (pcf): 150.01 Conc. Type: NWC
Conc. Modulus (ksi): 3834.80 Reinf. Modulus (ksi): 29000.00

DESIGN PARAMETERS:

	Major	Minor
Unbraced Length (ft)	13.00	13.00
K	1.91	1.91
Braced Against Sidesway	No	No

LONGITUDINAL REINFORCEMENT:

Controlling Load Combination: (2) 1.200 D + 1.600 Lp

Axial		Load (kip)	41.59
Moment	Top	Major(kip-ft)	103.27
		Minor(kip-ft)	-6.88
Moment	Bottom	Major(kip-ft)	-35.22
		Minor(kip-ft)	3.33

Calculated Parameters (Angle = 3.81 degrees): Ld/Cap = 0.44

0.90 Pn(kip): 41.59
0.90 Mn Major(kip-ft): 234.98 0.90 Mn Minor(kip-ft): 15.66

	Major	Minor
Kl/r	43.01	86.02
Slender	Yes	Yes
Slenderness:		
Pu (kip)	41.59	41.59
Combination	2	2
Cm	0.46	0.47
K	1.00	1.00
δns	1.00	1.00
βd	0.77	0.77
Pc (kip)	4848.34	1212.09
Ig (in^4)	13824.00	3456.00

TRANSVERSE REINFORCEMENT:

Controlling Load Combination: (2) 1.200 D + 1.600 Lp

	LC	Vu (kip)	Vc (kip)	Vs (kip)	ϕ	ϕ (Vc + Vs) (kip)	Ld/Cap
1 Major:	0	11.81	35.19	71.36	0.75	79.92	0.15
1 Minor:	0	0.79	31.33	31.76	0.75	47.32	0.02

TORSION CAPACITY:

Controlling Load Combination: (2) 1.200 D + 1.600 Lp
0.75 Tn (kip-ft) 5.71 Tu (kip-ft) 0.00

Concrete Column Design Summary

RAM Concrete Column v17.01.01.05
Database: ASD CMU - 12.08.2020 - Essex Project - 02.05.21 — 02/08/21 14:31:26
Building Code: IBC — Concrete Code: ACI 318-14

Location: 66.56ft - 59.85ft

No.	Level	Section	f'c	Longitudinal	Rho %	Ld/Cap	Transverse	Ld/Cap
1	Podium	*24 x 12	4.00	6-#8 (2 x 1)	1.65	0.44	#3@ 4.0" 0'-0"-13'-0"	0.15

Location: 66.56ft - 147.43ft

No.	Level	Section	f'c	Longitudinal	Rho %	Ld/Cap	Transverse	Ld/Cap
2	Podium	*24 x 12	4.00	6-#8 (2 x 1)	1.65	0.38	#3@ 4.0" 0'-0"-13'-0"	0.11

Location: 71.89ft - 58.35ft

No.	Level	Section	f'c	Longitudinal	Rho %	Ld/Cap	Transverse	Ld/Cap
3	Podium	*24 x 12	4.00	6-#8 (2 x 1)	1.65	0.36	#3@ 4.0" 0'-0"-13'-0"	0.07

Location: 92.23ft - 58.52ft

No.	Level	Section	f'c	Longitudinal	Rho %	Ld/Cap	Transverse	Ld/Cap
4	Podium	*24 x 12	4.00	6-#8 (2 x 1)	1.65	0.45	#3@ 4.0" 0'-0"-13'-0"	0.09

Location: 92.23ft - 88.52ft

No.	Level	Section	f'c	Longitudinal	Rho %	Ld/Cap	Transverse	Ld/Cap
5	Podium	*24 x 12	4.00	6-#8 (2 x 1)	1.65	0.54	#3@ 4.0" 0'-0"-13'-0"	0.02

Location: 92.23ft - 118.43ft

No.	Level	Section	f'c	Longitudinal	Rho %	Ld/Cap	Transverse	Ld/Cap
6	Podium	*24 x 12	4.00	6-#8 (2 x 1)	1.65	0.53	#3@ 4.0" 0'-0"-13'-0"	0.01

Location: 121.56ft - 58.52ft

No.	Level	Section	f'c	Longitudinal	Rho %	Ld/Cap	Transverse	Ld/Cap
7	Podium	*24 x 12	4.00	6-#8 (2 x 1)	1.65	0.50	#3@ 4.0" 0'-0"-13'-0"	0.12

Location: 121.56ft - 88.52ft

No.	Level	Section	f'c	Longitudinal	Rho %	Ld/Cap	Transverse	Ld/Cap
8	Podium	*24 x 12	4.00	6-#8 (2 x 1)	1.65	0.56	#3@ 4.0" 0'-0"-13'-0"	0.03

Location: 121.56ft - 118.43ft

Concrete Column Design Summary

No.	Level	Section	f'c	Longitudinal	Rho %	Ld/Cap	Transverse	Ld/Cap
9	Podium	*24 x 12	4.00	6-#8 (2 x 1)	1.65	0.54	#3@ 4.0" 0'-0"-13'-0"	0.01

Location: 152.23ft - 58.52ft

No.	Level	Section	f'c	Longitudinal	Rho %	Ld/Cap	Transverse	Ld/Cap
10	Podium	*24 x 12	4.00	6-#8 (2 x 1)	1.65	0.53	#3@ 4.0" 0'-0"-13'-0"	0.12

Location: 152.23ft - 88.52ft

No.	Level	Section	f'c	Longitudinal	Rho %	Ld/Cap	Transverse	Ld/Cap
11	Podium	*24 x 12	4.00	6-#8 (2 x 1)	1.65	0.57	#3@ 4.0" 0'-0"-13'-0"	0.15

Location: 152.23ft - 118.43ft

No.	Level	Section	f'c	Longitudinal	Rho %	Ld/Cap	Transverse	Ld/Cap
12	Podium	*24 x 12	4.00	6-#8 (2 x 1)	1.65	0.54	#3@ 4.0" 0'-0"-13'-0"	0.13

Location: 182.89ft - 58.52ft

No.	Level	Section	f'c	Longitudinal	Rho %	Ld/Cap	Transverse	Ld/Cap
13	Podium	*24 x 12	4.00	6-#8 (2 x 1)	1.65	0.55	#3@ 4.0" 0'-0"-13'-0"	0.13

Location: 182.89ft - 88.52ft

No.	Level	Section	f'c	Longitudinal	Rho %	Ld/Cap	Transverse	Ld/Cap
14	Podium	*24 x 12	4.00	6-#8 (2 x 1)	1.65	0.52	#3@ 4.0" 0'-0"-13'-0"	0.14

Location: 182.89ft - 118.43ft

No.	Level	Section	f'c	Longitudinal	Rho %	Ld/Cap	Transverse	Ld/Cap
15	Podium	*24 x 12	4.00	6-#8 (2 x 1)	1.65	0.51	#3@ 4.0" 0'-0"-13'-0"	0.13

Location: 212.98ft - 147.93ft

No.	Level	Section	f'c	Longitudinal	Rho %	Ld/Cap	Transverse	Ld/Cap
16	Podium	*24 x 12	4.00	6-#8 (2 x 1)	1.65	0.59	#3@ 4.0" 0'-0"-13'-0"	0.14

Location: 213.56ft - 58.35ft

Concrete Column Design Summary

No.	Level	Section	f'c	Longitudinal	Rho %	Ld/Cap	Transverse	Ld/Cap
17	Podium	*24 x 12	4.00	6-#8 (2 x 1)	1.65	0.39	#3@ 4.0" 0'-0"-13'-0"	0.11

Location: 213.56ft - 88.52ft

No.	Level	Section	f'c	Longitudinal	Rho %	Ld/Cap	Transverse	Ld/Cap
18	Podium	*24 x 12	4.00	6-#8 (2 x 1)	1.65	0.56	#3@ 4.0" 0'-0"-13'-0"	0.01

Location: 213.56ft - 118.43ft

No.	Level	Section	f'c	Longitudinal	Rho %	Ld/Cap	Transverse	Ld/Cap
19	Podium	*24 x 12	4.00	6-#8 (2 x 1)	1.65	0.58	#3@ 4.0" 0'-0"-13'-0"	0.03

Location: 243.98ft - 147.93ft

No.	Level	Section	f'c	Longitudinal	Rho %	Ld/Cap	Transverse	Ld/Cap
20	Podium	*24 x 12	4.00	6-#8 (2 x 1)	1.65	0.56	#3@ 4.0" 0'-0"-13'-0"	0.15

Location: 244.23ft - 58.52ft

No.	Level	Section	f'c	Longitudinal	Rho %	Ld/Cap	Transverse	Ld/Cap
21	Podium	*24 x 12	4.00	6-#8 (2 x 1)	1.65	0.42	#3@ 4.0" 0'-0"-13'-0"	0.12

Location: 244.23ft - 88.52ft

No.	Level	Section	f'c	Longitudinal	Rho %	Ld/Cap	Transverse	Ld/Cap
22	Podium	*24 x 12	4.00	6-#8 (2 x 1)	1.65	0.54	#3@ 4.0" 0'-0"-13'-0"	0.03

Location: 244.23ft - 118.43ft

No.	Level	Section	f'c	Longitudinal	Rho %	Ld/Cap	Transverse	Ld/Cap
23	Podium	*24 x 12	4.00	6-#8 (2 x 1)	1.65	0.55	#3@ 4.0" 0'-0"-13'-0"	0.03

Location: 259.14ft - 58.35ft

No.	Level	Section	f'c	Longitudinal	Rho %	Ld/Cap	Transverse	Ld/Cap
24	Podium	*24 x 12	4.00	6-#8 (2 x 1)	1.65	0.35	#3@ 4.0" 0'-0"-13'-0"	0.08

Location: 269.52ft - 59.85ft

Concrete Column Design Summary

RAM Concrete Column v17.01.01.05 | Page 4/4
Database: ASD CMU - 12.08.2020 - Essex Project - 02.05.21 | 02/08/21 14:31:26
Building Code: IBC | Concrete Code: ACI 318-14

No.	Level	Section	f'c	Longitudinal	Rho %	Ld/Cap	Transverse	Ld/Cap
25	Podium	*24 x 12	4.00	6-#8 (2 x 1)	1.65	0.39	#3@ 4.0" 0'-0"-13'-0"	0.13

Location: 269.52ft - 147.43ft

No.	Level	Section	f'c	Longitudinal	Rho %	Ld/Cap	Transverse	Ld/Cap
26	Podium	*24 x 12	4.00	6-#8 (2 x 1)	1.65	0.38	#3@ 4.0" 0'-0"-13'-0"	0.11

THANG LE, S.E.
STRUCTURAL ENGINEER
Phone: (626) 731-1539 Fax: (626) 447-3400

FOUNDATION DESIGN

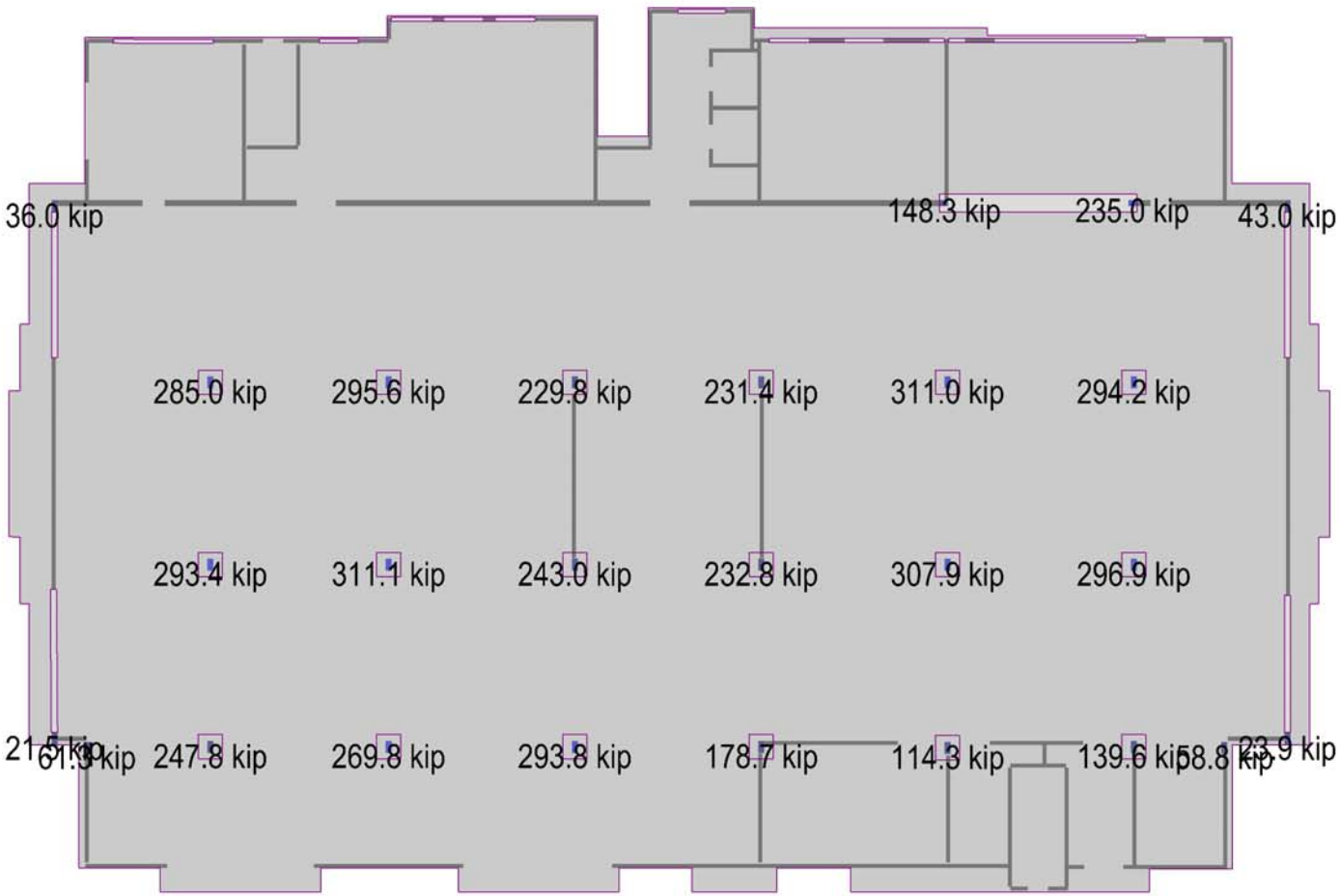

COLUMN LOADS AT STRENGTH LEVEL /KIPS/

F1

THANG LE, S.E.
STRUCTURAL ENGINEER

319 E. FOOTHILL BLVD., SUITE C, ARCADIA, CA 90006

Phone: (626) 538-2702

PROJECT NO:

Project: Essex Project

5'-6" SQUARE FOOTING DESIGN

Allowable Bearing Pressure = 3200 psf

Net Concrete Weight = 0 pcf
Concrete strength = 3000 psi

5.5 FOOT SQUARE FOOTING T = 24 in 12 " x 24 " COLUMN

d = T – 3.5 = 20.5 in.

Capacity = 5.5 ² * (3200 psf – 0 psf) = 30.3 (3.2) = 96.8 KIP CAPACITY
SERVICE LEVEL

Pu = 1.6 * 96.8 k = **155 KIP CAPACITY**
STRENGTH LEVEL

Check Punching Shear (2 - Way Shear)

b1 = 12 " + 20.5 " = 32.5 "
b2 = 24 " + 20.5 " = 44.5 "

Bo = 2(32.5 " + 44.5 ") = 154 "

Vu = 1.6 { 96.8 – [3.2 ksf (32.5 ") (44.5 ") / 144] } = 84.5 kips

øVc = 0.85 * 4 * sqrt(f'c) * Bo * d / 1000 = 588 kips > Vu OK

Check Beam Shear (1 - Way Shear)

d from face of column = $\frac{12}{2*12} + \frac{20.5}{12}$ = 2.21 ft

Vu = 5.5 ($\frac{5.5}{2}$ - 2.2083) 1.6 (3.2 ksf) = 15.3 kips

øVc = .85 * 2 * sqrt(f'c) * (L*12) * d / 1000 = 126 kips > Vu OK

Flexural Design

Mu = 1.6 (3.2 ksf) * 5.5 ($\frac{5.5}{2}$ – $\frac{12}{24}$)² / 2 = 71.3 k-f

a = 0.28 " As req = 0.78 sq.in.

USE:	6	-	# 6	**OK**
OR:	6	-	# 6	**OK**

THANG LE, S.E.
STRUCTURAL ENGINEER

319 E. FOOTHILL BLVD., SUITE C, ARCADIA, CA 90006

Phone: (626) 538-2702

PROJECT NO:

Project: Essex

7'-6" SQUARE FOOTING DESIGN

Allowable Bearing Pressure = 3600 psf

Net Concrete Weight = 0 pcf
Concrete strength = 3000 psi

7.5 FOOT SQUARE FOOTING T = 26 in 12 " x 24 " COLUMN

d = T – 3.5 = 22.5 in.

Capacity = 7.5 ² * (3600 psf – 0 psf) = 56.3 (3.6) = 203 KIP CAPACITY
SERVICE LEVEL

Pu = 1.6 * 203 k = **324 KIP CAPACITY**
STRENGTH LEVEL

Check Punching Shear (2 - Way Shear)

b1 = 12 " + 22.5 " = 34.5 "
b2 = 24 " + 22.5 " = 46.5 "

Bo = 2(34.5 " + 46.5 ") = 162 "

Vu = 1.6 { 203 – [3.6 ksf (34.5 ") (46.5 ") / 144] } = 238 kips

øVc = 0.85 * 4 * sqrt(f'c) * Bo * d / 1000 = 679 kips > Vu OK

Check Beam Shear (1 - Way Shear)

d from face of column = $\frac{12}{2*12} + \frac{22.5}{12}$ = 2.38 ft

Vu = 7.5 ($\frac{7.5}{2}$ - 2.375) 1.6 (3.6 ksf) = 59.4 kips

øVc = .85 * 2 * sqrt(f'c) * (L*12) * d / 1000 = 189 kips > Vu OK

Flexural Design

Mu = 1.6 (3.6 ksf) * 7.5 ($\frac{7.5}{2}$ – $\frac{12}{24}$)² / 2 = 228 k-f

a = 0.6 " As req = 2.28 sq.in.

USE:	8	-	# 6	**OK**
OR:	8	-	# 6	**OK**

THANG LE, S.E.
STRUCTURAL ENGINEER

319 E. FOOTHILL BLVD., SUITE C, ARCADIA, CA 90006

Phone: (626) 538-2702

PROJECT NO:

Project: ESSEX

8'-0" SQUARE FOOTING DESIGN

Allowable Bearing Pressure = 3700 psf

Net Concrete Weight = 0 pcf
Concrete strength = 3000 psi

8 FOOT SQUARE FOOTING T = 26 in 12 " x 24 " COLUMN

d = T – 3.5 = 22.5 in.

Capacity = 8 ² * (3700 psf – 0 psf) = 64 (3.7) = 237 KIP CAPACITY
SERVICE LEVEL

Pu = 1.6 * 237 k = **379 KIP CAPACITY**
STRENGTH LEVEL

Check Punching Shear (2 - Way Shear)

b1 = 12 " + 22.5 " = 34.5 "
b2 = 24 " + 22.5 " = 46.5 "

Bo = 2(34.5 " + 46.5 ") = 162 "

Vu = 1.6 { 237 – [3.7 ksf (34.5 ") (46.5 ") / 144] } = 290 kips

øVc = 0.85 * 4 * sqrt(f'c) * Bo * d / 1000 = 679 kips > Vu OK

Check Beam Shear (1 - Way Shear)

d from face of column = $\frac{12}{2*12} + \frac{22.5}{12}$ = 2.38 ft

Vu = 8 ($\frac{8}{2}$ - 2.375) 1.6 (3.7 ksf) = 77 kips

øVc = .85 * 2 * sqrt(f'c) * (L*12) * d / 1000 = 201 kips > Vu OK

Flexural Design

Mu = 1.6 (3.7 ksf) * 8 ($\frac{8}{2}$ – $\frac{12}{24}$)² / 2 = 290 k-f

a = 0.71 " As req = 2.91 sq.in.

USE:	7	-	# 7	**OK**
OR:	7	-	# 7	**OK**

THANG LE, S.E.
STRUCTURAL ENGINEER

319 E. FOOTHILL BLVD., SUITE C, ARCADIA, CA 90006

Phone: (626) 538-2702

PROJECT NO:

Project: ESSEX

9'-0" SQUARE FOOTING DESIGN

Allowable Bearing Pressure = 3900 psf

Net Concrete Weight = 0 pcf
Concrete strength = 3000 psi

9 FOOT SQUARE FOOTING T = 28 in 12 " x 24 " COLUMN

d = T – 3.5 = 24.5 in.

Capacity = 9 ² * (3900 psf – 0 psf) = 81 (3.9) = 316 KIP CAPACITY
SERVICE LEVEL

Pu = 1.6 * 316 k = **505 KIP CAPACITY**
STRENGTH LEVEL

Check Punching Shear (2 - Way Shear)

b1 = 12 " + 24.5 " = 36.5 "
b2 = 24 " + 24.5 " = 48.5 "

Bo = 2(36.5 " + 48.5 ") = 170 "

Vu = 1.6 { 316 – [3.9 ksf (36.5 ") (48.5 ") / 144] } = 404 kips

øVc = 0.85 * 4 * sqrt(f'c) * Bo * d / 1000 = 776 kips > Vu OK

Check Beam Shear (1 - Way Shear)

d from face of column = $\frac{12}{2*12} + \frac{24.5}{12}$ = 2.54 ft

Vu = $9 \left(\frac{9}{2} - 2.5417 \right) 1.6 (3.9 \text{ ksf})$ = 110 kips

øVc = .85 * 2 * sqrt(f'c) * (L*12) * d / 1000 = 246 kips > Vu OK

Flexural Design

Mu = $1.6 (3.9 \text{ ksf}) * 9 \left(\frac{9}{2} - \frac{12}{24} \right)^2 / 2$ = 449 k-f

a = 0.9 " As req = 4.15 sq.in.

USE:	8	-	# 7	**OK**
OR:	8	-	# 7	**OK**

THANG LE, S.E.
STRUCTURAL ENGINEER

319 E. FOOTHILL BLVD., SUITE C, ARCADIA, CA 90006

Phone: (626) 538-2702

PROJECT NO:

Project: ESSEX

9'-6" SQUARE FOOTING DESIGN

Allowable Bearing Pressure = 4000 psf

Net Concrete Weight = 0 pcf
Concrete strength = 3000 psi

9.5 FOOT SQUARE FOOTING T = 30 in 12 " x 24 " COLUMN

d = T – 3.5 = 26.5 in.

Capacity = 9.5 ² * (4000 psf – 0 psf) = 90.3 (4) = 361 KIP CAPACITY
SERVICE LEVEL

Pu = 1.6 * 361 k = **578 KIP CAPACITY**
STRENGTH LEVEL

Check Punching Shear (2 - Way Shear)

b1 = 12 " + 26.5 " = 38.5 "
b2 = 24 " + 26.5 " = 50.5 "

Bo = 2(38.5 " + 50.5 ") = 178 "

Vu = 1.6 { 361 – [4 ksf (38.5 ") (50.5 ") / 144] } = 464 kips

øVc = 0.85 * 4 * sqrt(f'c) * Bo * d / 1000 = 878 kips > Vu OK

Check Beam Shear (1 - Way Shear)

d from face of column = $\frac{12}{2*12} + \frac{26.5}{12}$ = 2.71 ft

Vu = 9.5 ($\frac{9.5}{2}$ - 2.7083) 1.6 (4 ksf) = 124 kips

øVc = .85 * 2 * sqrt(f'c) * (L*12) * d / 1000 = 281 kips > Vu OK

Flexural Design

Mu = 1.6 (4 ksf) * 9.5 ($\frac{9.5}{2}$ – $\frac{12}{24}$)² / 2 = 549 k-f

a = 0.97 " As req = 4.69 sq.in.

USE:	8	-	# 7	**OK**
OR:	8	-	# 7	**OK**

FOOTING MAP AND ID

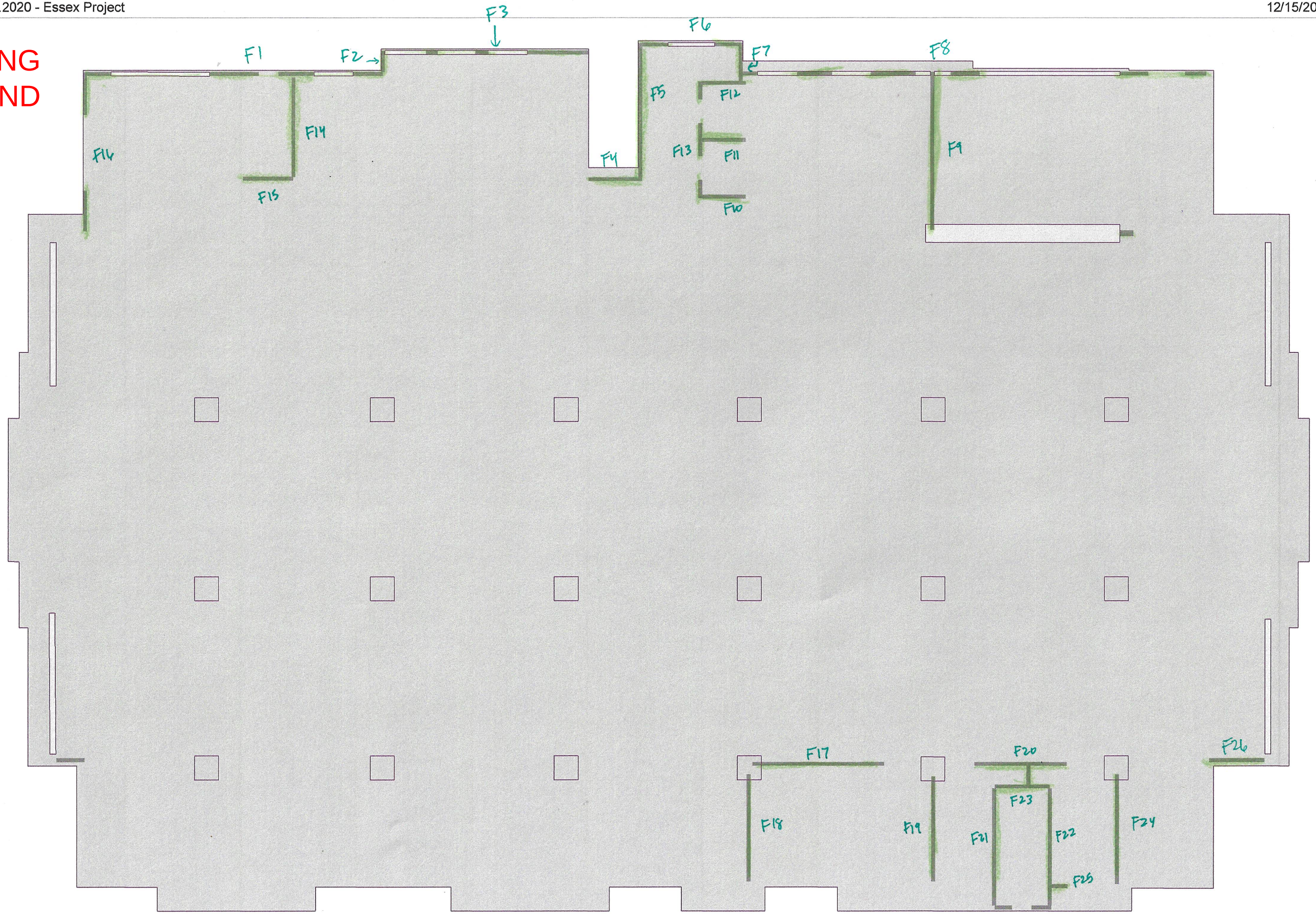

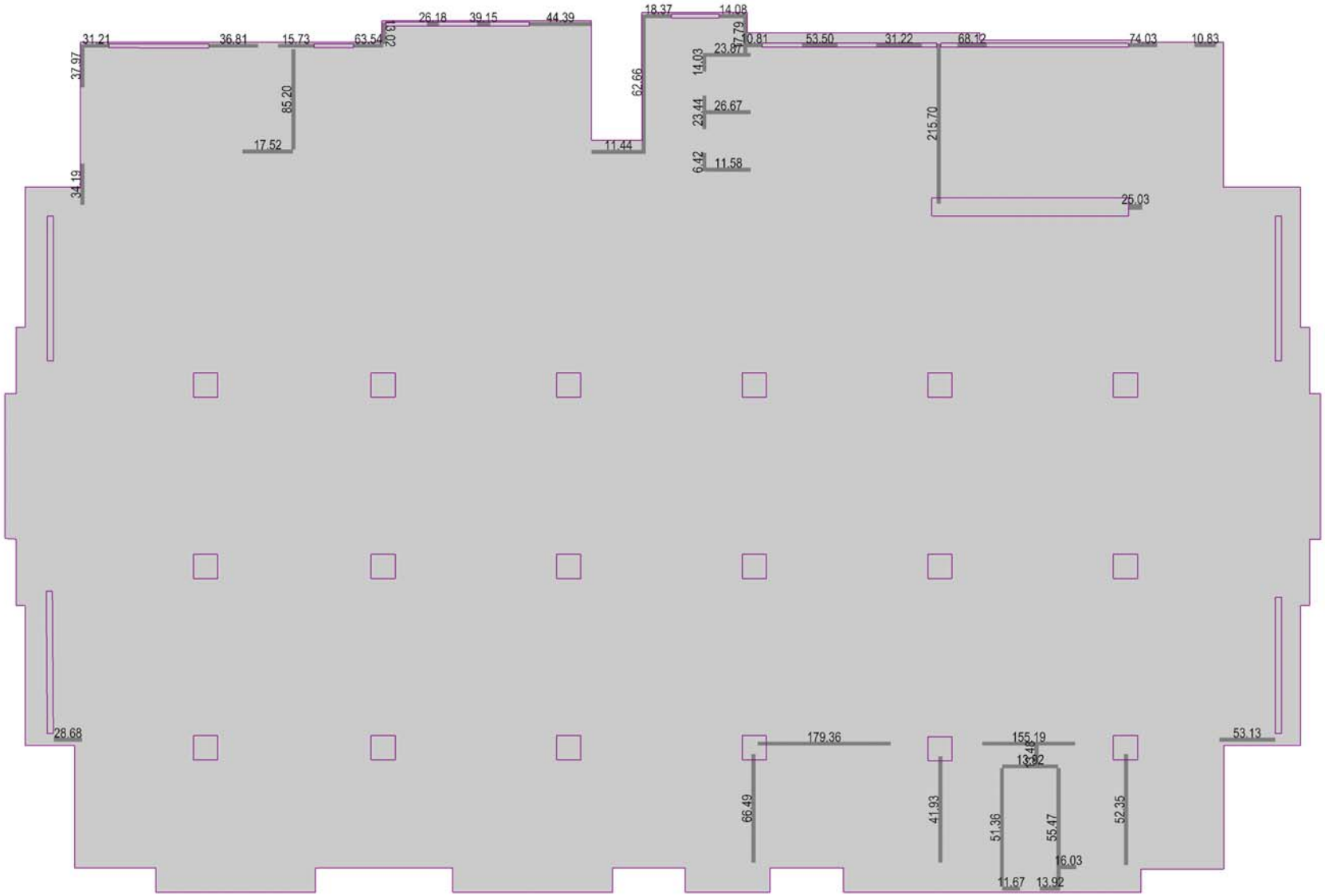

LC: 1.4D - AXIAL LOAD AT STRENGTH LEVEL /KIPS/

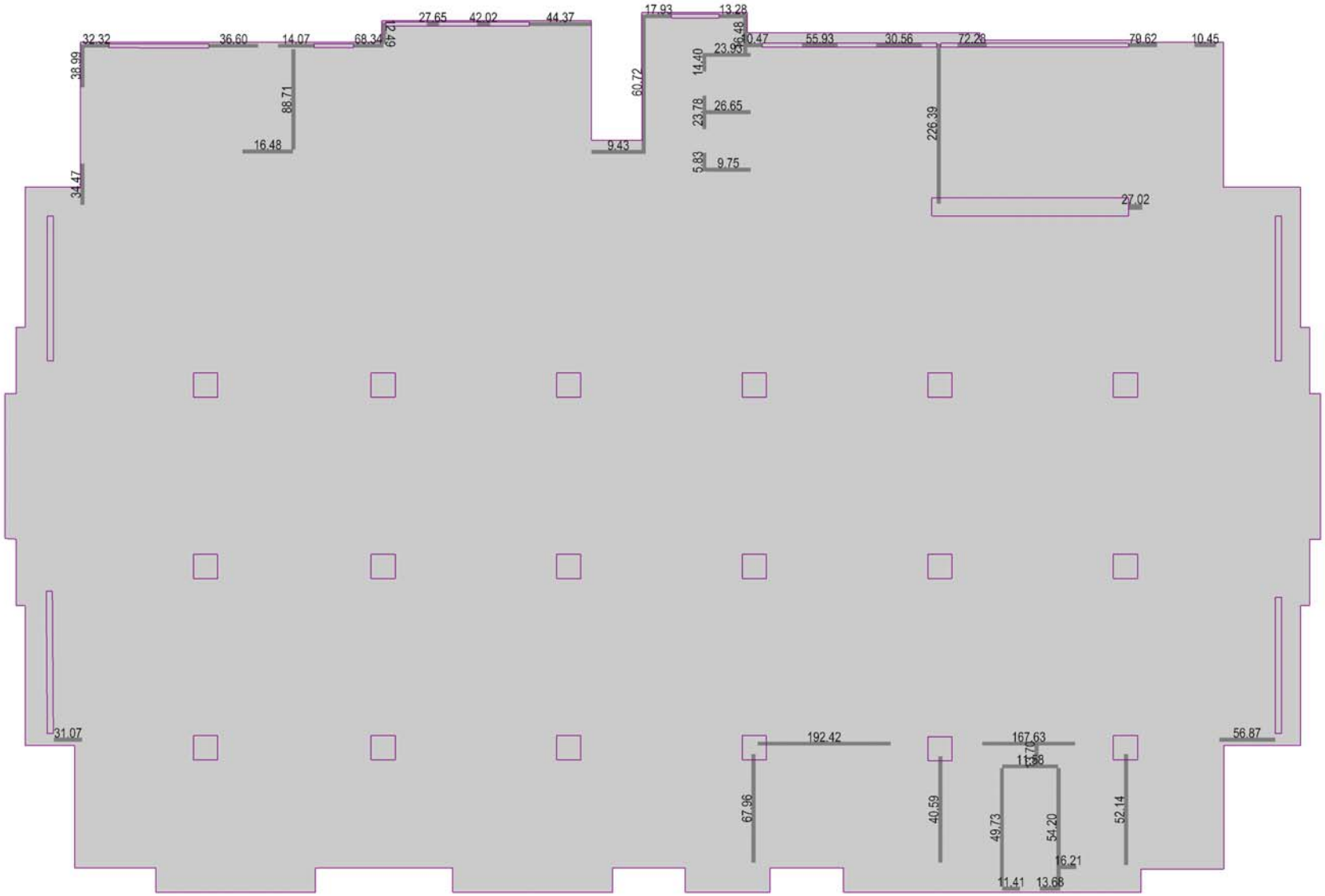

LC:1.2D+1.6L - AXIAL LOAD AT STRENGTH LEVEL /KIPS/

SHEET NO: _____

THANG LE, S.E.
STRUCTURAL ENGINEER
319 E. Foothill Blvd., Arcadia, CA 91006 - Suite C
Phone: (626) 538-2702

PROJECT NO: _____

Project: ESSEX **Mark: F1**

CHECK CONTINUOUS "L" SHAPED FOOTING

DEMAND

Total Wall Length =	50	ft.	
Wall Thickness =	8	in.	
Pu =	151.26	kip / Strength Level	
Wall Earth Pressure Moment =	0	kip-ft	/see basement calc./
Allowable Soil Bearing =	2834	psf	
fy =	60000	psi	
Concrete Strength =	2500	psi	
Concrete Self Weight =	150	pcf	

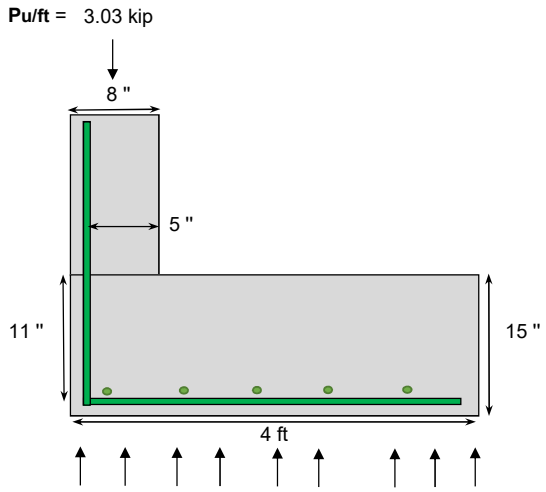

DEMAND LOAD PER FOOT

Pu=	3025.20	lb/ft
Wall Earth Pressure Moment =	0.00	lb-ft/ft
Eccentricity Moment =	2750.43	lb-ft
Total Moment, Mu =	2750.43	lb-ft
e =	0.91	ft.

Base Length=	3.67	ft
Foot Thickness, t =	15	in.
Net Soil Bearing =	2834	psf
qu =	588.8	psf /Service Level/

SATISFY BEARING PRESSURE

DESIGN IS ADEQUATE

FOOTING SHEAR DESIGN

Vu =	1424.9	lb
ϕVn =	9900.0	lb

SATISFY SHEAR

FOOTING FLEXURE DESIGN

TYPICAL HORIZONTAL REINFORCEMENT	# 5 @12 in. o-c		
As, prov =	0.307	in^2	
As, temp =	0.238	in^2	OK
d =	11 "		
a =	0.722	in.	
ϕMn =	14688.1	lb-ft	

SATISFY FLEXURE

WALL FLEXURE DESIGN

TYPICAL VERTICAL REINFORCEMENT	# 5 @12 in. o-c		/see basement calc./
As, prov =	0.307	in^2	
As, temp =	0.108	in^2	OK
d =	5 "		
a =	0.722	in.	
ϕMn =	6404.6	lb-ft	

SATISFY FLEXURE

SHEET NO: _____

THANG LE, S.E.
STRUCTURAL ENGINEER
319 E. Foothill Blvd., Arcadia, CA 91006 - Suite C
Phone: (626) 538-2702

PROJECT NO: _____

Project: ESSEX **Mark: F2**

CHECK CONTINUOUS "L" SHAPED FOOTING

DEMAND

Total Wall Length =	4.25	ft.	
Wall Thickness =	8	in.	
Pu =	13	kip / Strength Level	
Wall Earth Pressure Moment =	0	kip-ft	/see basement calc./
Allowable Soil Bearing =	2834	psf	
fy =	60000	psi	
Concrete Strength =	2500	psi	
Concrete Self Weight =	150	pcf	

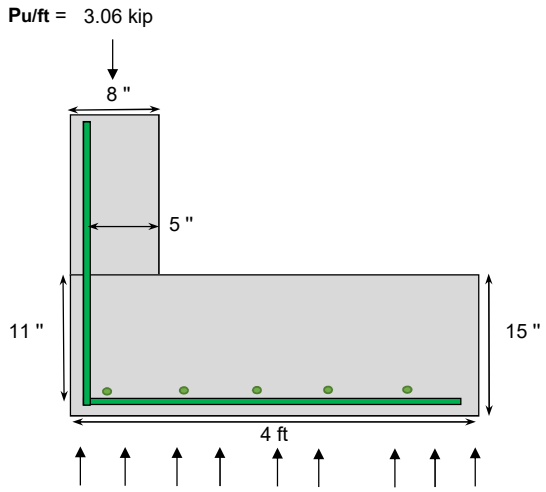

DEMAND LOAD PER FOOT

Pu=	3058.82	lb/ft
Wall Earth Pressure Moment =	0.00	lb-ft/ft
Eccentricity Moment =	2781.00	lb-ft
Total Moment, Mu =	2781.00	lb-ft
e =	0.91	ft.

Base Length=	3.67	ft
Foot Thickness, t =	15	in.
Net Soil Bearing =	2834	psf
qu =	595.3	psf /Service Level/

SATISFY BEARING PRESSURE

DESIGN IS ADEQUATE

FOOTING SHEAR DESIGN

Vu =	1440.7	lb
ϕVn =	9900.0	lb

SATISFY SHEAR

FOOTING FLEXURE DESIGN

TYPICAL HORIZONTAL REINFORCEMENT	# 5 @12 in. o-c		
As, prov =	0.307	in^2	
As, temp =	0.238	in^2	OK
d =	11 "		
a =	0.722	in.	
ϕMn =	14688.1	lb-ft	

SATISFY FLEXURE

WALL FLEXURE DESIGN

TYPICAL VERTICAL REINFORCEMENT	# 5 @12 in. o-c		/see basement calc./
As, prov =	0.307	in^2	
As, temp =	0.108	in^2	OK
d =	5 "		
a =	0.722	in.	
ϕMn =	6404.6	lb-ft	

SATISFY FLEXURE

SHEET NO: _____

PROJECT NO: _____

THANG LE, S.E.
STRUCTURAL ENGINEER
319 E. Foothill Blvd., Arcadia, CA 91006 - Suite C
Phone: (626) 538-2702

Project: ESSEX **Mark: F3**

CHECK CONTINUOUS "L" SHAPED FOOTING

DEMAND

Total Wall Length =	34	ft.	
Wall Thickness =	8	in.	
Pu =	115	kip / Strength Level	
Wall Earth Pressure Moment =	0	kip-ft	/see basement calc./
Allowable Soil Bearing =	2834	psf	
fy =	60000	psi	
Concrete Strength =	2500	psi	
Concrete Self Weight =	150	pcf	

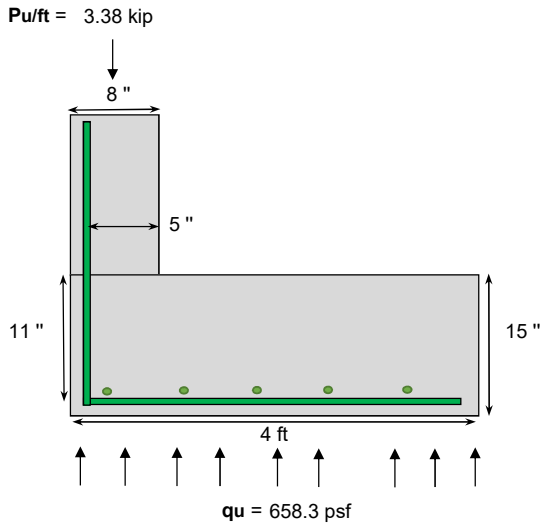

DEMAND LOAD PER FOOT

Pu=	3382.35	lb/ft
Wall Earth Pressure Moment =	0.00	lb-ft/ft
Eccentricity Moment =	3075.15	lb-ft
Total Moment, Mu =	3075.15	lb-ft
e =	0.91	ft.

Base Length=	3.67	ft
Foot Thickness, t =	15	in.
Net Soil Bearing =	2834	psf
qu =	658.3	psf /Service Level/

SATISFY BEARING PRESSURE

DESIGN IS ADEQUATE

FOOTING SHEAR DESIGN

Vu =	1593.1	lb
ϕVn =	9900.0	lb

SATISFY SHEAR

FOOTING FLEXURE DESIGN

TYPICAL HORIZONTAL REINFORCEMENT	# 5 @12 in. o-c		
As, prov =	0.307	in^2	
As, temp =	0.238	in^2	OK
d =	11 "		
a =	0.722	in.	
ϕMn =	14688.1	lb-ft	

SATISFY FLEXURE

WALL FLEXURE DESIGN

TYPICAL VERTICAL REINFORCEMENT	# 5 @12 in. o-c		/see basement calc./
As, prov =	0.307	in^2	
As, temp =	0.108	in^2	OK
d =	5 "		
a =	0.722	in.	
ϕMn =	6404.6	lb-ft	

SATISFY FLEXURE

SHEET NO: _____

THANG LE, S.E.
STRUCTURAL ENGINEER

319 E. Foothill Blvd., Arcadia, California 91006 - Suite C

Phone: (626) 538 - 2702

PROJECT NO: _____

Project: ESSEX **Mark:** F4

CONTINUOUS FOOTING DESIGN

DEMAND

Total Wall Length =	9	ft.
Wall Thickness =	8	in.
Pu =	11.44	kip. /Strength Level/
Allowable Soil Bearing =	2500	psf
fy =	60000	psi
Concrete Strength =	2500	psf
Concrete Self Weight =	150	pcf

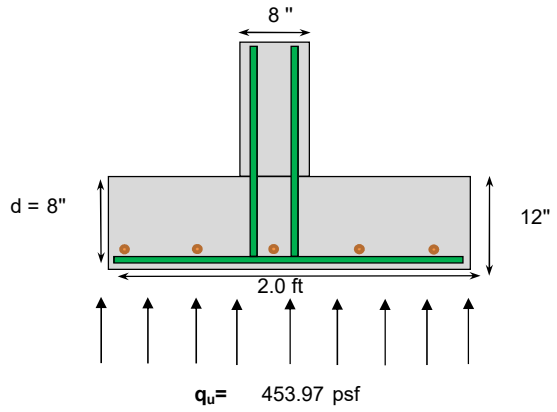

PROPERTIES & DESIGN

Pu=	1.27	kip/ft
Mu - (One way) =	0.14	kip-ft. /Strength Level/
Mu - (Two Way) =	DOES NOT REQUIRED	
Footing - Base Length =	9	ft.
Footing - Base Width =	2	ft.
Footing Thickness =	12	in.
Net Soil Bearing =	2500	psf
q_u=	453.97	psf. /Service Level/

SATISFY BEARING PRESSURE

DESIGN IS ADEQUATE

FOOTING SHEAR DESIGN

Vu =	0.00	kips. /Strength Level/
ϕVn =	7.20	kips. /Strength Level/
ϕ=	0.75	/ACI - 9.3.2.3/

SATISFY SHEAR

ONE WAY - FOOTING FLEXURE DESIGN

TYPICAL HORIZONTAL REINFORCEMENT	#5 @16 in. o-c		
As, prov =	0.233	in^2	
As, temp =	0.173	in^2	***OK***
d =	8"		
a =	0.55	in.	
ϕMn =	8.08	kip-ft. /Strength Level/	
ϕ=	0.9	/ACI - 9.3.2.1/	

SATISFY FLEXURE

TWO WAY - FOOTING FLEXURE DESIGN

(DOES NOT REQURIED, USE MIN. REINF.)

TYPICAL HORIZONTAL REINFORCEMENT	#4 @12 in. o-c		
Mu - (Two Way) =	0.00	kip-ft. /Strength Level/	
As, prov =	0.200	in^2	
As, temp =	0.173	in^2	***OK***
d =	8"		
a =	0.47	in.	
ϕMn =	6.99	kip-ft. /Strength Level/	
ϕ=	0.9	/ACI - 9.3.2.1/	

SATISFY FLEXURE

SHEET NO: _____

THANG LE, S.E.
STRUCTURAL ENGINEER

319 E. Foothill Blvd., Arcadia, California 91006 - Suite C

Phone: (626) 538 - 2702

PROJECT NO: _____

Project: ESSEX **Mark:** F5

CONTINUOUS FOOTING DESIGN

DEMAND

Total Wall Length =	23	ft.
Wall Thickness =	8	in.
Pu =	62.66	kip. /Strength Level/
Allowable Soil Bearing =	2500	psf
fy =	60000	psi
Concrete Strength =	2500	psf
Concrete Self Weight =	150	pcf

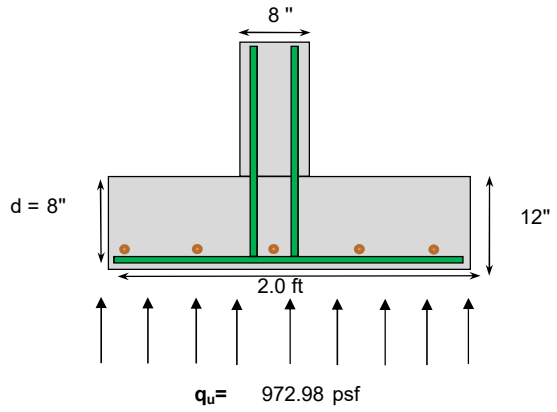

PROPERTIES & DESIGN

Pu=	2.72	kip/ft
Mu - (One way) =	0.30	kip-ft. /Strength Level/
Mu - (Two Way) =	DOES NOT REQUIRED	
Footing - Base Length =	23	ft.
Footing - Base Width =	2	ft.
Footing Thickness =	12	in.
Net Soil Bearing =	2500	psf
q_u=	972.98	psf. /Service Level/

SATISFY BEARING PRESSURE

DESIGN IS ADEQUATE

FOOTING SHEAR DESIGN

Vu =	0.00	kips. /Strength Level/
ϕVn =	7.20	kips. /Strength Level/
ϕ=	0.75	/ACI - 9.3.2.3/

SATISFY SHEAR

ONE WAY - FOOTING FLEXURE DESIGN

TYPICAL HORIZONTAL REINFORCEMENT	#5 @16 in. o-c		
As, prov =	0.233	in^2	
As, temp =	0.173	in^2	***OK***
d =	8"		
a =	0.55	in.	
ϕMn =	8.08	kip-ft. /Strength Level/	
ϕ=	0.9	/ACI - 9.3.2.1/	

SATISFY FLEXURE

TWO WAY - FOOTING FLEXURE DESIGN

(DOES NOT REQURIED, USE MIN. REINF.)

TYPICAL HORIZONTAL REINFORCEMENT	#4 @12 in. o-c		
Mu - (Two Way) =	0.00	kip-ft. /Strength Level/	
As, prov =	0.200	in^2	
As, temp =	0.173	in^2	***OK***
d =	8"		
a =	0.47	in.	
ϕMn =	6.99	kip-ft. /Strength Level/	
ϕ=	0.9	/ACI - 9.3.2.1/	

SATISFY FLEXURE

SHEET NO: _____

PROJECT NO: _____

THANG LE, S.E.
STRUCTURAL ENGINEER
319 E. Foothill Blvd., Arcadia, CA 91006 - Suite C
Phone: (626) 538-2702

Project: ESSEX **Mark: F6**

CHECK CONTINUOUS "L" SHAPED FOOTING

DEMAND

Total Wall Length =	16	ft.	
Wall Thickness =	8	in.	
Pu =	33	kip / Strength Level	
Wall Earth Pressure Moment =	0	kip-ft	/see basement calc./
Allowable Soil Bearing =	2834	psf	
fy =	60000	psi	
Concrete Strength =	2500	psi	
Concrete Self Weight =	150	pcf	

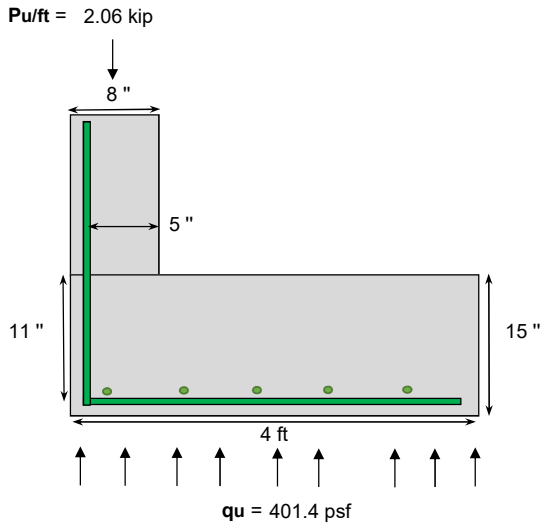

DEMAND LOAD PER FOOT

Pu=	2062.50	lb/ft
Wall Earth Pressure Moment =	0.00	lb-ft/ft
Eccentricity Moment =	1875.17	lb-ft
Total Moment, Mu =	1875.17	lb-ft
e =	0.91	ft.

Base Length=	3.67	ft
Foot Thickness, t =	15	in.
Net Soil Bearing =	2834	psf
qu =	401.4	psf /Service Level/

SATISFY BEARING PRESSURE

DESIGN IS ADEQUATE

FOOTING SHEAR DESIGN

Vu =	971.4	lb
ϕVn =	9900.0	lb

SATISFY SHEAR

FOOTING FLEXURE DESIGN

TYPICAL HORIZONTAL REINFORCEMENT	# 5 @12 in. o-c		
As, prov =	0.307	in^2	
As, temp =	0.238	in^2	OK
d =	11 "		
a =	0.722	in.	
ϕMn =	14688.1	lb-ft	

SATISFY FLEXURE

WALL FLEXURE DESIGN

TYPICAL VERTICAL REINFORCEMENT	# 5 @12 in. o-c		/see basement calc./
As, prov =	0.307	in^2	
As, temp =	0.108	in^2	OK
d =	5 "		
a =	0.722	in.	
ϕMn =	6404.6	lb-ft	

SATISFY FLEXURE

SHEET NO: _____

PROJECT NO: _____

THANG LE, S.E.
STRUCTURAL ENGINEER
319 E. Foothill Blvd., Arcadia, CA 91006 - Suite C
Phone: (626) 538-2702

Project: ESSEX **Mark: F7**

CHECK CONTINUOUS "L" SHAPED FOOTING

DEMAND

Total Wall Length =	6	ft.	
Wall Thickness =	8	in.	
Pu =	18	kip / Strength Level	
Wall Earth Pressure Moment =	0	kip-ft	**/see basement calc./**
Allowable Soil Bearing =	2500	psf	
fy =	60000	psi	
Concrete Strength =	2500	psi	
Concrete Self Weight =	150	pcf	

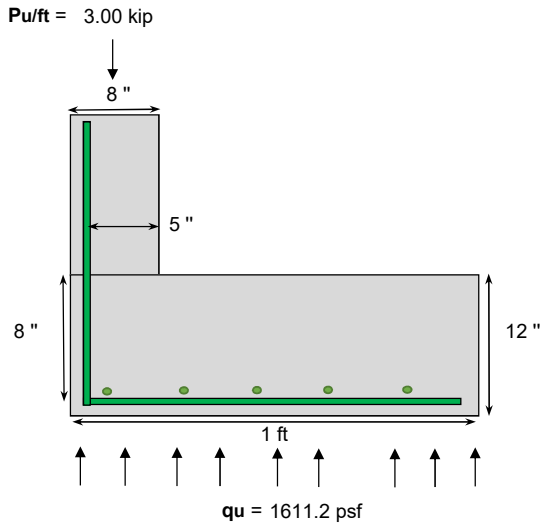

DEMAND LOAD PER FOOT

Pu=	3000.00	lb/ft
Wall Earth Pressure Moment =	0.00	lb-ft/ft
Eccentricity Moment =	2248.12	lb-ft
Total Moment, Mu =	2248.12	lb-ft
e =	0.75	ft.

Base Length=	1.33	ft
Foot Thickness, t =	12	in.
Net Soil Bearing =	2500	psf
qu =	1611.2	psf /Service Level/

SATISFY BEARING PRESSURE

DESIGN IS ADEQUATE

FOOTING SHEAR DESIGN

Vu =	531.7	lb
ϕVn =	7200.0	lb

SATISFY SHEAR

FOOTING FLEXURE DESIGN

TYPICAL HORIZONTAL REINFORCEMENT	# 5 @12 in. o-c		
As, prov =	0.307	in^2	
As, temp =	0.173	in^2	**OK**
d =	8 "		
a =	0.722	in.	
ϕMn =	10546.4	lb-ft	

SATISFY FLEXURE

WALL FLEXURE DESIGN

TYPICAL VERTICAL REINFORCEMENT	# 5 @12 in. o-c		**/see basement calc./**
As, prov =	0.307	in^2	
As, temp =	0.108	in^2	**OK**
d =	5 "		
a =	0.722	in.	
ϕMn =	6404.6	lb-ft	

SATISFY FLEXURE

SHEET NO: _____

PROJECT NO: _____

THANG LE, S.E.
STRUCTURAL ENGINEER
319 E. Foothill Blvd., Arcadia, CA 91006 - Suite C
Phone: (626) 538-2702

Project: ESSEX **Mark: F8**

CHECK CONTINUOUS "L" SHAPED FOOTING

DEMAND

Total Wall Length =	77	ft.	
Wall Thickness =	8	in.	
Pu =	249	kip / Strength Level	
Wall Earth Pressure Moment =	0	kip-ft	/see basement calc./
Allowable Soil Bearing =	2834	psf	
fy =	60000	psi	
Concrete Strength =	2500	psi	
Concrete Self Weight =	150	pcf	

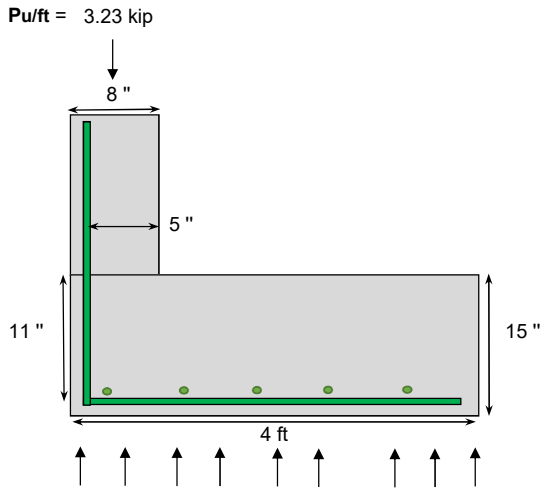

DEMAND LOAD PER FOOT

Pu=	3233.77	lb/ft
Wall Earth Pressure Moment =	0.00	lb-ft/ft
Eccentricity Moment =	2940.05	lb-ft
Total Moment, Mu =	2940.05	lb-ft
e =	0.91	ft.

Base Length=	3.67	ft
Foot Thickness, t =	15	in.
Net Soil Bearing =	2834	psf
qu =	629.4	psf /Service Level/

SATISFY BEARING PRESSURE

DESIGN IS ADEQUATE

FOOTING SHEAR DESIGN

Vu =	1523.1	lb
ϕVn =	9900.0	lb

SATISFY SHEAR

FOOTING FLEXURE DESIGN

TYPICAL HORIZONTAL REINFORCEMENT	# 5 @12 in. o-c		
As, prov =	0.307	in^2	
As, temp =	0.238	in^2	OK
d =	11 "		
a =	0.722	in.	
ϕMn =	14688.1	lb-ft	

SATISFY FLEXURE

WALL FLEXURE DESIGN

TYPICAL VERTICAL REINFORCEMENT	# 5 @12 in. o-c		/see basement calc./
As, prov =	0.307	in^2	
As, temp =	0.108	in^2	OK
d =	5 "		
a =	0.722	in.	
ϕMn =	6404.6	lb-ft	

SATISFY FLEXURE

SHEET NO: _____

THANG LE, S.E.
STRUCTURAL ENGINEER

319 E. Foothill Blvd., Arcadia, California 91006 - Suite C

Phone: (626) 538 - 2702

PROJECT NO: _____

Project: ESSEX **Mark:** F9

CONTINUOUS FOOTING DESIGN

DEMAND

Total Wall Length =	27.5	ft.
Wall Thickness =	8	in.
Pu =	226.39	kip. /Strength Level/
Allowable Soil Bearing =	2500	psf
fy =	60000	psi
Concrete Strength =	2500	psf
Concrete Self Weight =	150	pcf

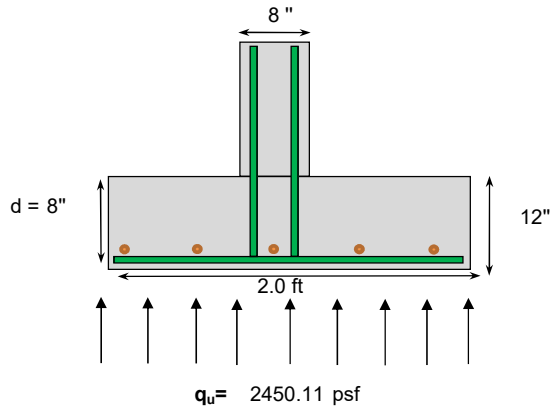

PROPERTIES & DESIGN

Pu=	8.23	kip/ft
Mu - (One way) =	0.76	kip-ft. /Strength Level/
Mu - (Two Way) =	SEE TWO WAY FLEXURE DESIGN	
Footing - Base Length =	33	ft.
Footing - Base Width =	2	ft.
Footing Thickness =	12	in.
Net Soil Bearing =	2500	psf
q_u=	2450.11	psf. /Service Level/

SATISFY BEARING PRESSURE

DESIGN IS ADEQUATE

FOOTING SHEAR DESIGN

Vu =	0.00	kips. /Strength Level/
ϕVn =	7.20	kips. /Strength Level/
ϕ=	0.75	/ACI - 9.3.2.3/

SATISFY SHEAR

ONE WAY - FOOTING FLEXURE DESIGN

TYPICAL HORIZONTAL REINFORCEMENT	#5 @12 in. o-c		
As, prov =	0.310	in^2	
As, temp =	0.173	in^2	***OK***
d =	8"		
a =	0.73	in.	
ϕMn =	10.65	kip-ft. /Strength Level/	
ϕ=	0.9	/ACI - 9.3.2.1/	

SATISFY FLEXURE

TWO WAY - FOOTING FLEXURE DESIGN (DOES REQUIRED.)

TYPICAL HORIZONTAL REINFORCEMENT	#7 @3 in. o-c		
Mu - (Two Way) =	51.88	kip-ft. /Strength Level/	
As, prov =	2.400	in^2	
As, temp =	0.173	in^2	***OK***
d =	8"		
a =	5.65	in.	
ϕMn =	55.91	kip-ft. /Strength Level/	
ϕ=	0.9	/ACI - 9.3.2.1/	

SATISFY FLEXURE

SHEET NO: _____

THANG LE, S.E.
STRUCTURAL ENGINEER

319 E. Foothill Blvd., Arcadia, California 91006 - Suite C

Phone: (626) 538 - 2702

PROJECT NO: _____

Project: ESSEX **Mark:** F10 F11 F12

CONTINUOUS FOOTING DESIGN

DEMAND

Total Wall Length =	8	ft.
Wall Thickness =	8	in.
Pu =	26.67	kip. /Strength Level/
Allowable Soil Bearing =	2500	psf
fy =	60000	psi
Concrete Strength =	2500	psf
Concrete Self Weight =	150	pcf

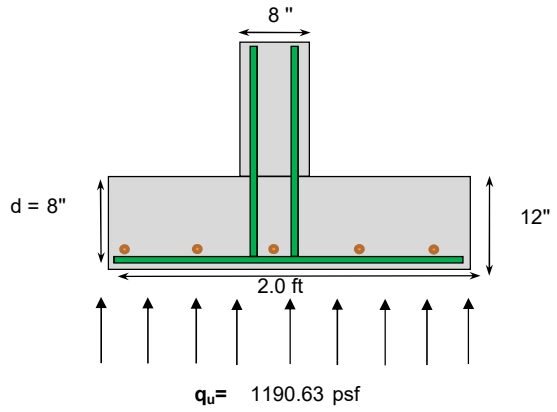

PROPERTIES & DESIGN

Pu=	3.33	kip/ft
Mu - (One way) =	0.37	kip-ft. /Strength Level/
Mu - (Two Way) =	DOES NOT REQUIRED	
Footing - Base Length =	8	ft.
Footing - Base Width =	2	ft.
Footing Thickness =	12	in.
Net Soil Bearing =	2500	psf
q_u=	1190.63	psf. /Service Level/

SATISFY BEARING PRESSURE

DESIGN IS ADEQUATE

FOOTING SHEAR DESIGN

Vu =	0.00	kips. /Strength Level/
ϕVn =	7.20	kips. /Strength Level/
ϕ=	0.75	/ACI - 9.3.2.3/

SATISFY SHEAR

ONE WAY - FOOTING FLEXURE DESIGN

TYPICAL HORIZONTAL REINFORCEMENT	#5 @16 in. o-c		
As, prov =	0.233	in^2	
As, temp =	0.173	in^2	***OK***
d =	8"		
a =	0.55	in.	
ϕMn =	8.08	kip-ft. /Strength Level/	
ϕ=	0.9	/ACI - 9.3.2.1/	

SATISFY FLEXURE

TWO WAY - FOOTING FLEXURE DESIGN

(DOES NOT REQURIED, USE MIN. REINF.)

TYPICAL HORIZONTAL REINFORCEMENT	#4 @12 in. o-c		
Mu - (Two Way) =	0.00	kip-ft. /Strength Level/	
As, prov =	0.200	in^2	
As, temp =	0.173	in^2	***OK***
d =	8"		
a =	0.47	in.	
ϕMn =	6.99	kip-ft. /Strength Level/	
ϕ=	0.9	/ACI - 9.3.2.1/	

SATISFY FLEXURE

SHEET NO: _____

THANG LE, S.E.
STRUCTURAL ENGINEER

319 E. Foothill Blvd., Arcadia, California 91006 - Suite C

Phone: (626) 538 - 2702

PROJECT NO: _____

Project: ESSEX **Mark:** F13

CONTINUOUS FOOTING DESIGN

DEMAND

Total Wall Length =	19.5	ft.
Wall Thickness =	8	in.
Pu =	62.12	kip. /Strength Level/
Allowable Soil Bearing =	2500	psf
fy =	60000	psi
Concrete Strength =	2500	psf
Concrete Self Weight =	150	pcf

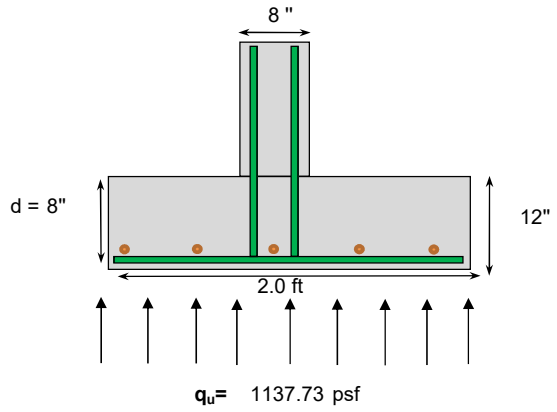

PROPERTIES & DESIGN

Pu=	3.19	kip/ft
Mu - (One way) =	0.35	kip-ft. /Strength Level/
Mu - (Two Way) =	DOES NOT REQUIRED	
Footing - Base Length =	19.5	ft.
Footing - Base Width =	2	ft.
Footing Thickness =	12	in.
Net Soil Bearing =	2500	psf
q_u=	1137.73	psf. /Service Level/

SATISFY BEARING PRESSURE

DESIGN IS ADEQUATE

FOOTING SHEAR DESIGN

Vu =	0.00	kips. /Strength Level/
ϕVn =	7.20	kips. /Strength Level/
ϕ=	0.75	/ACI - 9.3.2.3/

SATISFY SHEAR

ONE WAY - FOOTING FLEXURE DESIGN

TYPICAL HORIZONTAL REINFORCEMENT	#5 @16 in. o-c		
As, prov =	0.233	in^2	
As, temp =	0.173	in^2	***OK***
d =	8"		
a =	0.55	in.	
ϕMn =	8.08	kip-ft. /Strength Level/	
ϕ=	0.9	/ACI - 9.3.2.1/	

SATISFY FLEXURE

TWO WAY - FOOTING FLEXURE DESIGN

(DOES NOT REQURIED, USE MIN. REINF.)

TYPICAL HORIZONTAL REINFORCEMENT	#4 @12 in. o-c		
Mu - (Two Way) =	0.00	kip-ft. /Strength Level/	
As, prov =	0.200	in^2	
As, temp =	0.173	in^2	***OK***
d =	8"		
a =	0.47	in.	
ϕMn =	6.99	kip-ft. /Strength Level/	
ϕ=	0.9	/ACI - 9.3.2.1/	

SATISFY FLEXURE

SHEET NO: _____

THANG LE, S.E.
STRUCTURAL ENGINEER

319 E. Foothill Blvd., Arcadia, California 91006 - Suite C

Phone: (626) 538 - 2702

PROJECT NO: _____

Project: ESSEX **Mark:** F14

CONTINUOUS FOOTING DESIGN

DEMAND

Total Wall Length =	16.5	ft.
Wall Thickness =	8	in.
Pu =	88.71	kip. /Strength Level/
Allowable Soil Bearing =	2500	psf
fy =	60000	psi
Concrete Strength =	2500	psf
Concrete Self Weight =	150	pcf

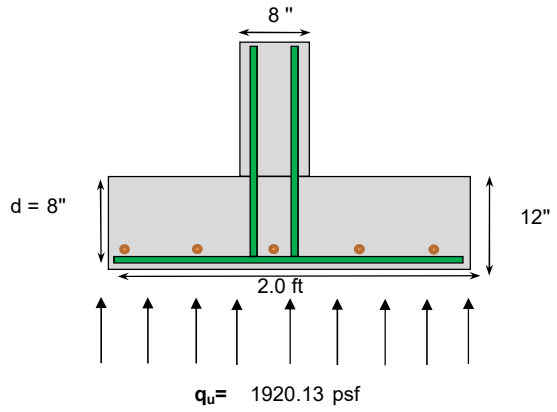

PROPERTIES & DESIGN

Pu=	5.38	kip/ft
Mu - (One way) =	0.60	kip-ft. /Strength Level/
Mu - (Two Way) =	DOES NOT REQUIRED	
Footing - Base Length =	16.5	ft.
Footing - Base Width =	2	ft.
Footing Thickness =	12	in.
Net Soil Bearing =	2500	psf
q_u=	1920.13	psf. /Service Level/

SATISFY BEARING PRESSURE

DESIGN IS ADEQUATE

FOOTING SHEAR DESIGN

Vu =	0.00	kips. /Strength Level/
ϕVn =	7.20	kips. /Strength Level/
ϕ=	0.75	/ACI - 9.3.2.3/

SATISFY SHEAR

ONE WAY - FOOTING FLEXURE DESIGN

TYPICAL HORIZONTAL REINFORCEMENT	#5 @16 in. o-c		
As, prov =	0.233	in^2	
As, temp =	0.173	in^2	*OK*
d =	8"		
a =	0.55	in.	
ϕMn =	8.08	kip-ft. /Strength Level/	
ϕ=	0.9	/ACI - 9.3.2.1/	

SATISFY FLEXURE

TWO WAY - FOOTING FLEXURE DESIGN

(DOES NOT REQURIED, USE MIN. REINF.)

TYPICAL HORIZONTAL REINFORCEMENT	#4 @12 in. o-c		
Mu - (Two Way) =	0.00	kip-ft. /Strength Level/	
As, prov =	0.200	in^2	
As, temp =	0.173	in^2	*OK*
d =	8"		
a =	0.47	in.	
ϕMn =	6.99	kip-ft. /Strength Level/	
ϕ=	0.9	/ACI - 9.3.2.1/	

SATISFY FLEXURE

SHEET NO: _____

THANG LE, S.E.
STRUCTURAL ENGINEER

319 E. Foothill Blvd., Arcadia, California 91006 - Suite C

Phone: (626) 538 - 2702

PROJECT NO: _____

Project: ESSEX **Mark:** F15

CONTINUOUS FOOTING DESIGN

DEMAND

Total Wall Length =	9	ft.
Wall Thickness =	8	in.
Pu =	17.52	kip. /Strength Level/
Allowable Soil Bearing =	2500	psf
fy =	60000	psi
Concrete Strength =	2500	psf
Concrete Self Weight =	150	pcf

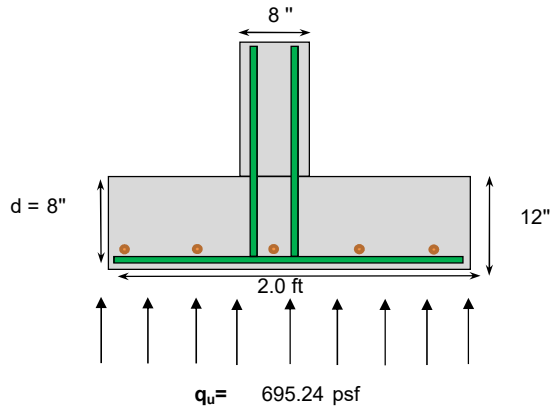

PROPERTIES & DESIGN

Pu=	1.95	kip/ft
Mu - (One way) =	0.22	kip-ft. /Strength Level/
Mu - (Two Way) =	DOES NOT REQUIRED	
Footing - Base Length =	9	ft.
Footing - Base Width =	2	ft.
Footing Thickness =	12	in.
Net Soil Bearing =	2500	psf
q_u=	695.24	psf. /Service Level/

SATISFY BEARING PRESSURE

DESIGN IS ADEQUATE

FOOTING SHEAR DESIGN

Vu =	0.00	kips. /Strength Level/
ϕVn =	7.20	kips. /Strength Level/
ϕ=	0.75	/ACI - 9.3.2.3/

SATISFY SHEAR

ONE WAY - FOOTING FLEXURE DESIGN

TYPICAL HORIZONTAL REINFORCEMENT	#5 @16 in. o-c		
As, prov =	0.233	in^2	
As, temp =	0.173	in^2	***OK***
d =	8"		
a =	0.55	in.	
ϕMn =	8.08	kip-ft. /Strength Level/	
ϕ=	0.9	/ACI - 9.3.2.1/	

SATISFY FLEXURE

TWO WAY - FOOTING FLEXURE DESIGN

(DOES NOT REQURIED, USE MIN. REINF.)

TYPICAL HORIZONTAL REINFORCEMENT	#4 @12 in. o-c		
Mu - (Two Way) =	0.00	kip-ft. /Strength Level/	
As, prov =	0.200	in^2	
As, temp =	0.173	in^2	***OK***
d =	8"		
a =	0.47	in.	
ϕMn =	6.99	kip-ft. /Strength Level/	
ϕ=	0.9	/ACI - 9.3.2.1/	

SATISFY FLEXURE

SHEET NO: _____

PROJECT NO: _____

THANG LE, S.E.
STRUCTURAL ENGINEER
319 E. Foothill Blvd., Arcadia, CA 91006 - Suite C
Phone: (626) 538-2702

Project: ESSEX **Mark: F16**

CHECK CONTINUOUS "L" SHAPED FOOTING

DEMAND

Total Wall Length =	26	ft.	
Wall Thickness =	8	in.	
Pu =	73.46	kip / Strength Level	
Wall Earth Pressure Moment =	0	kip-ft	/see basement calc./
Allowable Soil Bearing =	2400	psf	
fy =	60000	psi	
Concrete Strength =	2500	psi	
Concrete Self Weight =	150	pcf	

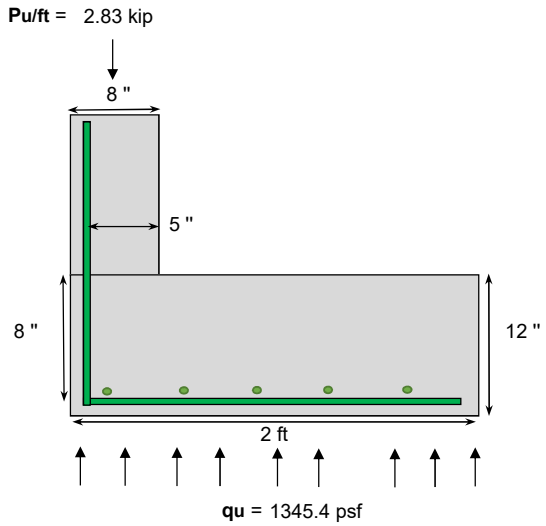

DEMAND LOAD PER FOOT

Pu=	2825.38	lb/ft
Wall Earth Pressure Moment =	0.00	lb-ft/ft
Eccentricity Moment =	2197.52	lb-ft
Total Moment, Mu =	2197.52	lb-ft
e =	0.78	ft.

Base Length=	1.5	ft
Foot Thickness, t =	12	in.
Net Soil Bearing =	2400	psf
qu =	1345.4	psf /Service Level/

SATISFY BEARING PRESSURE

DESIGN IS ADEQUATE

FOOTING SHEAR DESIGN

Vu =	672.7	lb
ϕVn =	7200.0	lb

SATISFY SHEAR

FOOTING FLEXURE DESIGN

TYPICAL HORIZONTAL REINFORCEMENT	# 5 @12 in. o-c		
As, prov =	0.307	in^2	
As, temp =	0.173	in^2	OK
d =	8 "		
a =	0.722	in.	
ϕMn =	10546.4	lb-ft	

SATISFY FLEXURE

WALL FLEXURE DESIGN

TYPICAL VERTICAL REINFORCEMENT	# 5 @12 in. o-c		/see basement calc./
As, prov =	0.307	in^2	
As, temp =	0.108	in^2	OK
d =	5 "		
a =	0.722	in.	
ϕMn =	6404.6	lb-ft	

SATISFY FLEXURE

SHEET NO: _____

THANG LE, S.E.
STRUCTURAL ENGINEER

319 E. Foothill Blvd., Arcadia, California 91006 - Suite C

Phone: (626) 538 - 2702

PROJECT NO: _____

Project: ESSEX **Mark:** F17

CONTINUOUS FOOTING DESIGN

DEMAND

Total Wall Length =	22	ft.
Wall Thickness =	8	in.
Pu =	192.42	kip. /Strength Level/
Allowable Soil Bearing =	2850	psf
fy =	60000	psi
Concrete Strength =	2500	psf
Concrete Self Weight =	150	pcf

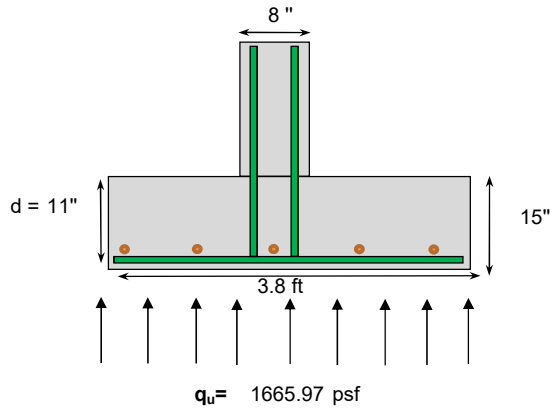

PROPERTIES & DESIGN

Pu=	8.75	kip/ft
Mu - (One way) =	2.77	kip-ft. /Strength Level/
Mu - (Two Way) =	DOES NOT REQUIRED	
Footing - Base Length =	22	ft.
Footing - Base Width =	3.75	ft.
Footing Thickness =	15	in.
Net Soil Bearing =	2850	psf
q_u=	1665.97	psf. /Service Level/

SATISFY BEARING PRESSURE

DESIGN IS ADEQUATE

FOOTING SHEAR DESIGN

Vu =	1.46	kips. /Strength Level/
ϕVn =	9.90	kips. /Strength Level/
ϕ=	0.75	/ACI - 9.3.2.3/

SATISFY SHEAR

ONE WAY - FOOTING FLEXURE DESIGN

TYPICAL HORIZONTAL REINFORCEMENT	#5 @16 in. o-c	
As, prov =	0.233	in^2
As, temp =	0.238	in^2
d =	11"	
a =	0.55	in.
ϕMn =	11.22	kip-ft. /Strength Level/
ϕ=	0.9	/ACI - 9.3.2.1/

ADD MORE REINF.

SATISFY FLEXURE

TWO WAY - FOOTING FLEXURE DESIGN

(DOES NOT REQURIED, USE MIN. REINF.)

TYPICAL HORIZONTAL REINFORCEMENT	#4 @12 in. o-c	
Mu - (Two Way) =	0.00	kip-ft. /Strength Level/
As, prov =	0.200	in^2
As, temp =	0.238	in^2
d =	11"	
a =	0.47	in.
ϕMn =	9.69	kip-ft. /Strength Level/
ϕ=	0.9	/ACI - 9.3.2.1/

OK

SATISFY FLEXURE

SHEET NO: _____

THANG LE, S.E.
STRUCTURAL ENGINEER

319 E. Foothill Blvd., Arcadia, California 91006 - Suite C

Phone: (626) 538 - 2702

PROJECT NO: _____

Project: ESSEX **Mark:** F18

CONTINUOUS FOOTING DESIGN

DEMAND

Total Wall Length =	17	ft.
Wall Thickness =	8	in.
Pu =	67.96	kip. /Strength Level/
Allowable Soil Bearing =	2850	psf
fy =	60000	psi
Concrete Strength =	2500	psf
Concrete Self Weight =	150	pcf

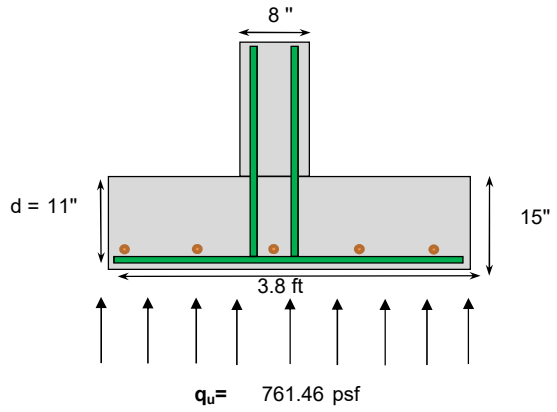

PROPERTIES & DESIGN

Pu=	4.00	kip/ft
Mu - (One way) =	1.27	kip-ft. /Strength Level/
Mu - (Two Way) =	DOES NOT REQUIRED	
Footing - Base Length =	17	ft.
Footing - Base Width =	3.75	ft.
Footing Thickness =	15	in.
Net Soil Bearing =	2850	psf
q_u=	761.46	psf. /Service Level/

SATISFY BEARING PRESSURE

DESIGN IS ADEQUATE

FOOTING SHEAR DESIGN

Vu =	0.67	kips. /Strength Level/
ϕVn =	9.90	kips. /Strength Level/
ϕ=	0.75	/ACI - 9.3.2.3/

SATISFY SHEAR

ONE WAY - FOOTING FLEXURE DESIGN

TYPICAL HORIZONTAL REINFORCEMENT	#5 @16 in. o-c	
As, prov =	0.233	in^2
As, temp =	0.238	in^2
d =	11"	
a =	0.55	in.
ϕMn =	11.22	kip-ft. /Strength Level/
ϕ=	0.9	/ACI - 9.3.2.1/

ADD MORE REINF.

SATISFY FLEXURE

TWO WAY - FOOTING FLEXURE DESIGN

(DOES NOT REQURIED, USE MIN. REINF.)

TYPICAL HORIZONTAL REINFORCEMENT	#4 @12 in. o-c	
Mu - (Two Way) =	0.00	kip-ft. /Strength Level/
As, prov =	0.200	in^2
As, temp =	0.238	in^2
d =	11"	
a =	0.47	in.
ϕMn =	9.69	kip-ft. /Strength Level/
ϕ=	0.9	/ACI - 9.3.2.1/

OK

SATISFY FLEXURE

SHEET NO: _____

THANG LE, S.E.
STRUCTURAL ENGINEER

319 E. Foothill Blvd., Arcadia, California 91006 - Suite C

Phone: (626) 538 - 2702

PROJECT NO: _____

Project: ESSEX **Mark:** F19

CONTINUOUS FOOTING DESIGN

DEMAND

Total Wall Length =	18	ft.
Wall Thickness =	8	in.
Pu =	41.93	kip. /Strength Level/
Allowable Soil Bearing =	2850	psf
fy =	60000	psi
Concrete Strength =	2500	psf
Concrete Self Weight =	150	pcf

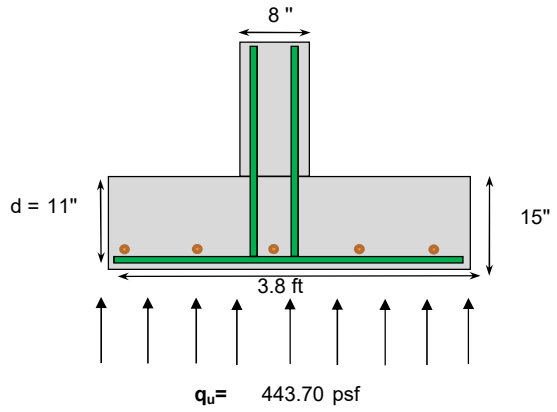

PROPERTIES & DESIGN

Pu=	2.33	kip/ft
Mu - (One way) =	0.74	kip-ft. /Strength Level/
Mu - (Two Way) =	DOES NOT REQUIRED	
Footing - Base Length =	18	ft.
Footing - Base Width =	3.75	ft.
Footing Thickness =	15	in.
Net Soil Bearing =	2850	psf
q_u=	443.70	psf. /Service Level/

SATISFY BEARING PRESSURE

DESIGN IS ADEQUATE

FOOTING SHEAR DESIGN

Vu =	0.39	kips. /Strength Level/
ϕVn =	9.90	kips. /Strength Level/
ϕ=	0.75	/ACI - 9.3.2.3/

SATISFY SHEAR

ONE WAY - FOOTING FLEXURE DESIGN

TYPICAL HORIZONTAL REINFORCEMENT	#5 @16 in. o-c	
As, prov =	0.233	in^2
As, temp =	0.238	in^2
d =	11"	
a =	0.55	in.
ϕMn =	11.22	kip-ft. /Strength Level/
ϕ=	0.9	/ACI - 9.3.2.1/

ADD MORE REINF.

SATISFY FLEXURE

TWO WAY - FOOTING FLEXURE DESIGN

(DOES NOT REQURIED, USE MIN. REINF.)

TYPICAL HORIZONTAL REINFORCEMENT	#4 @12 in. o-c	
Mu - (Two Way) =	0.00	kip-ft. /Strength Level/
As, prov =	0.200	in^2
As, temp =	0.238	in^2
d =	11"	
a =	0.47	in.
ϕMn =	9.69	kip-ft. /Strength Level/
ϕ=	0.9	/ACI - 9.3.2.1/

OK

SATISFY FLEXURE

SHEET NO: _____

THANG LE, S.E.
STRUCTURAL ENGINEER

319 E. Foothill Blvd., Arcadia, California 91006 - Suite C

Phone: (626) 538 - 2702

PROJECT NO: _____

Project: ESSEX **Mark:** F20

CONTINUOUS FOOTING DESIGN

DEMAND

Total Wall Length =	15.5	ft.
Wall Thickness =	8	in.
Pu =	167.63	kip. /Strength Level/
Allowable Soil Bearing =	2850	psf
fy =	60000	psi
Concrete Strength =	2500	psf
Concrete Self Weight =	150	pcf

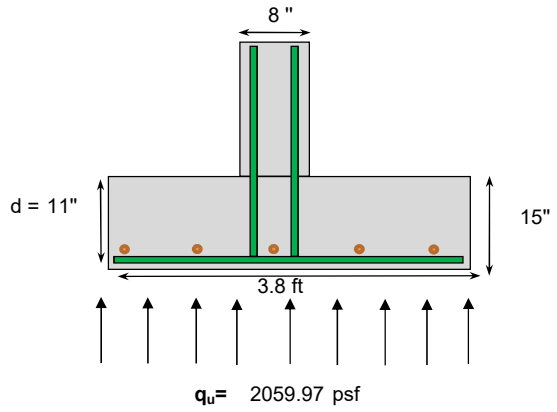

PROPERTIES & DESIGN

Pu=	10.81	kip/ft
Mu - (One way) =	3.43	kip-ft. /Strength Level/
Mu - (Two Way) =	DOES NOT REQUIRED	
Footing - Base Length =	15.5	ft.
Footing - Base Width =	3.75	ft.
Footing Thickness =	15	in.
Net Soil Bearing =	2850	psf
q_u=	2059.97	psf. /Service Level/

SATISFY BEARING PRESSURE

DESIGN IS ADEQUATE

FOOTING SHEAR DESIGN

Vu =	1.80	kips. /Strength Level/
ϕVn =	9.90	kips. /Strength Level/
ϕ=	0.75	/ACI - 9.3.2.3/

SATISFY SHEAR

ONE WAY - FOOTING FLEXURE DESIGN

TYPICAL HORIZONTAL REINFORCEMENT	#5 @16 in. o-c		
As, prov =	0.240	in^2	
As, temp =	0.238	in^2	***OK***
d =	11"		
a =	0.56	in.	
ϕMn =	11.58	kip-ft. /Strength Level/	
ϕ=	0.9	/ACI - 9.3.2.1/	

SATISFY FLEXURE

TWO WAY - FOOTING FLEXURE DESIGN

(DOES NOT REQURIED, USE MIN. REINF.)

TYPICAL HORIZONTAL REINFORCEMENT	#4 @12 in. o-c		
Mu - (Two Way) =	0.00	kip-ft. /Strength Level/	
As, prov =	0.200	in^2	
As, temp =	0.238	in^2	***OK***
d =	11"		
a =	0.47	in.	
ϕMn =	9.69	kip-ft. /Strength Level/	
ϕ=	0.9	/ACI - 9.3.2.1/	

SATISFY FLEXURE

SHEET NO: _____

THANG LE, S.E.
STRUCTURAL ENGINEER

319 E. Foothill Blvd., Arcadia, California 91006 - Suite C

Phone: (626) 538 - 2702

PROJECT NO: _____

Project: ESSEX **Mark:** F21,F22

CONTINUOUS FOOTING DESIGN

DEMAND

Total Wall Length =	20	ft.
Wall Thickness =	8	in.
Pu =	55.47	kip. /Strength Level/
Allowable Soil Bearing =	2500	psf
fy =	60000	psi
Concrete Strength =	2500	psf
Concrete Self Weight =	150	pcf

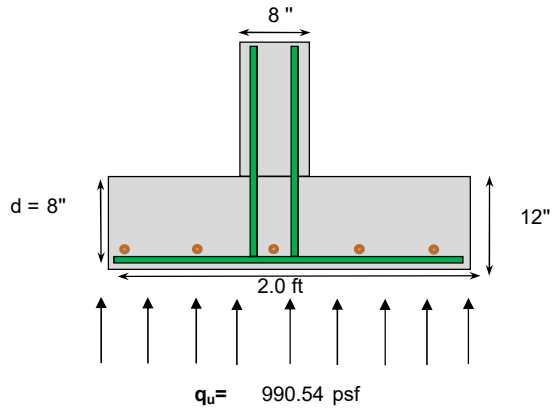

PROPERTIES & DESIGN

Pu=	2.77	kip/ft
Mu - (One way) =	0.31	kip-ft. /Strength Level/
Mu - (Two Way) =	DOES NOT REQUIRED	
Footing - Base Length =	20	ft.
Footing - Base Width =	2	ft.
Footing Thickness =	12	in.
Net Soil Bearing =	2500	psf
q_u=	990.54	psf. /Service Level/

SATISFY BEARING PRESSURE

DESIGN IS ADEQUATE

FOOTING SHEAR DESIGN

Vu =	0.00	kips. /Strength Level/
ϕVn =	7.20	kips. /Strength Level/
ϕ=	0.75	/ACI - 9.3.2.3/

SATISFY SHEAR

ONE WAY - FOOTING FLEXURE DESIGN

TYPICAL HORIZONTAL REINFORCEMENT	#5 @16 in. o-c		
As, prov =	0.233	in^2	
As, temp =	0.173	in^2	***OK***
d =	8"		
a =	0.55	in.	
ϕMn =	8.08	kip-ft. /Strength Level/	
ϕ=	0.9	/ACI - 9.3.2.1/	

SATISFY FLEXURE

TWO WAY - FOOTING FLEXURE DESIGN

(DOES NOT REQURIED, USE MIN. REINF.)

TYPICAL HORIZONTAL REINFORCEMENT	#4 @12 in. o-c		
Mu - (Two Way) =	0.00	kip-ft. /Strength Level/	
As, prov =	0.200	in^2	
As, temp =	0.173	in^2	***OK***
d =	8"		
a =	0.47	in.	
ϕMn =	6.99	kip-ft. /Strength Level/	
ϕ=	0.9	/ACI - 9.3.2.1/	

SATISFY FLEXURE

SHEET NO: _____

THANG LE, S.E.
STRUCTURAL ENGINEER

319 E. Foothill Blvd., Arcadia, California 91006 - Suite C

Phone: (626) 538 - 2702

PROJECT NO: _____

Project: ESSEX **Mark:** F23

CONTINUOUS FOOTING DESIGN

DEMAND

Total Wall Length =	10	ft.
Wall Thickness =	8	in.
Pu =	13.92	kip. /Strength Level/
Allowable Soil Bearing =	2500	psf
fy =	60000	psi
Concrete Strength =	2500	psf
Concrete Self Weight =	150	pcf

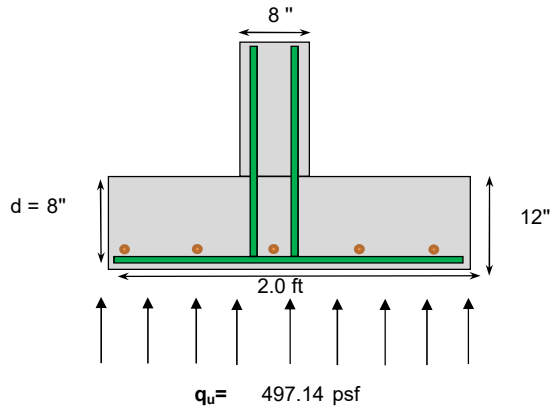

PROPERTIES & DESIGN

Pu=	1.39	kip/ft
Mu - (One way) =	0.15	kip-ft. /Strength Level/
Mu - (Two Way) =	DOES NOT REQUIRED	
Footing - Base Length =	10	ft.
Footing - Base Width =	2	ft.
Footing Thickness =	12	in.
Net Soil Bearing =	2500	psf
q_u=	497.14	psf. /Service Level/

SATISFY BEARING PRESSURE

DESIGN IS ADEQUATE

FOOTING SHEAR DESIGN

Vu =	0.00	kips. /Strength Level/
ϕVn =	7.20	kips. /Strength Level/
ϕ=	0.75	/ACI - 9.3.2.3/

SATISFY SHEAR

ONE WAY - FOOTING FLEXURE DESIGN

TYPICAL HORIZONTAL REINFORCEMENT	#5 @16 in. o-c		
As, prov =	0.233	in^2	
As, temp =	0.173	in^2	*OK*
d =	8"		
a =	0.55	in.	
ϕMn =	8.08	kip-ft. /Strength Level/	
ϕ=	0.9	/ACI - 9.3.2.1/	

SATISFY FLEXURE

TWO WAY - FOOTING FLEXURE DESIGN

(DOES NOT REQURIED, USE MIN. REINF.)

TYPICAL HORIZONTAL REINFORCEMENT	#4 @12 in. o-c		
Mu - (Two Way) =	0.00	kip-ft. /Strength Level/	
As, prov =	0.200	in^2	
As, temp =	0.173	in^2	*OK*
d =	8"		
a =	0.47	in.	
ϕMn =	6.99	kip-ft. /Strength Level/	
ϕ=	0.9	/ACI - 9.3.2.1/	

SATISFY FLEXURE

SHEET NO: _____

THANG LE, S.E.
STRUCTURAL ENGINEER

319 E. Foothill Blvd., Arcadia, California 91006 - Suite C

Phone: (626) 538 - 2702

PROJECT NO: _____

Project: ESSEX **Mark:** F24

CONTINUOUS FOOTING DESIGN

DEMAND

Total Wall Length =	18.25	ft.
Wall Thickness =	8	in.
Pu =	52.35	kip. /Strength Level/
Allowable Soil Bearing =	2550	psf
fy =	60000	psi
Concrete Strength =	2500	psf
Concrete Self Weight =	150	pcf

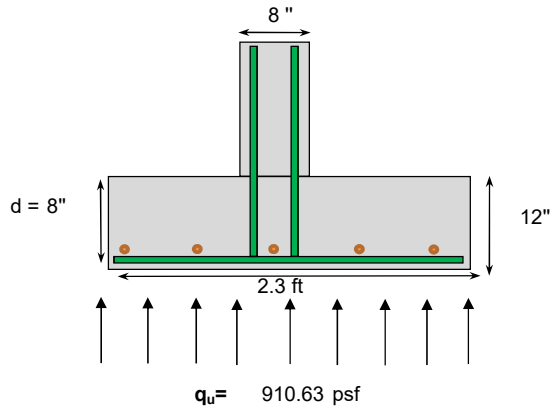

PROPERTIES & DESIGN

Pu=	2.87	kip/ft
Mu - (One way) =	0.40	kip-ft. /Strength Level/
Mu - (Two Way) =	DOES NOT REQUIRED	
Footing - Base Length =	18.25	ft.
Footing - Base Width =	2.25	ft.
Footing Thickness =	12	in.
Net Soil Bearing =	2550	psf
q_u=	910.63	psf. /Service Level/

SATISFY BEARING PRESSURE

DESIGN IS ADEQUATE

FOOTING SHEAR DESIGN

Vu =	0.16	kips. /Strength Level/
ϕVn =	7.20	kips. /Strength Level/
ϕ=	0.75	/ACI - 9.3.2.3/

SATISFY SHEAR

ONE WAY - FOOTING FLEXURE DESIGN

TYPICAL HORIZONTAL REINFORCEMENT	#5 @16 in. o-c		
As, prov =	0.233	in^2	
As, temp =	0.173	in^2	***OK***
d =	8"		
a =	0.55	in.	
ϕMn =	8.08	kip-ft. /Strength Level/	
ϕ=	0.9	/ACI - 9.3.2.1/	

SATISFY FLEXURE

TWO WAY - FOOTING FLEXURE DESIGN

(DOES NOT REQURIED, USE MIN. REINF.)

TYPICAL HORIZONTAL REINFORCEMENT	#4 @12 in. o-c		
Mu - (Two Way) =	0.00	kip-ft. /Strength Level/	
As, prov =	0.200	in^2	
As, temp =	0.173	in^2	***OK***
d =	8"		
a =	0.47	in.	
ϕMn =	6.99	kip-ft. /Strength Level/	
ϕ=	0.9	/ACI - 9.3.2.1/	

SATISFY FLEXURE

SHEET NO: _____

THANG LE, S.E.
STRUCTURAL ENGINEER

319 E. Foothill Blvd., Arcadia, California 91006 - Suite C

Phone: (626) 538 - 2702

PROJECT NO: _____

Project: ESSEX **Mark:** F25

CONTINUOUS FOOTING DESIGN

DEMAND

Total Wall Length =	2.75	ft.
Wall Thickness =	8	in.
Pu =	16.21	kip. /Strength Level/
Allowable Soil Bearing =	2500	psf
fy =	60000	psi
Concrete Strength =	2500	psf
Concrete Self Weight =	150	pcf

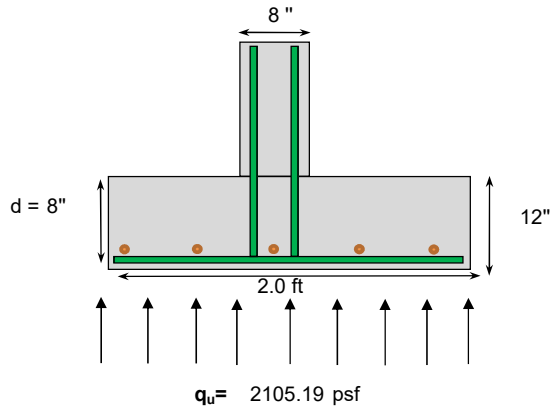

PROPERTIES & DESIGN

Pu=	5.89	kip/ft
Mu - (One way) =	0.65	kip-ft. /Strength Level/
Mu - (Two Way) =	DOES NOT REQUIRED	
Footing - Base Length =	2.75	ft.
Footing - Base Width =	2	ft.
Footing Thickness =	12	in.
Net Soil Bearing =	2500	psf
q_u=	2105.19	psf. /Service Level/

SATISFY BEARING PRESSURE

DESIGN IS ADEQUATE

FOOTING SHEAR DESIGN

Vu =	0.00	kips. /Strength Level/
ϕVn =	7.20	kips. /Strength Level/
ϕ=	0.75	/ACI - 9.3.2.3/

SATISFY SHEAR

ONE WAY - FOOTING FLEXURE DESIGN

TYPICAL HORIZONTAL REINFORCEMENT	#5 @12 in. o-c		
As, prov =	0.310	in^2	
As, temp =	0.173	in^2	***OK***
d =	8"		
a =	0.73	in.	
ϕMn =	10.65	kip-ft. /Strength Level/	
ϕ=	0.9	/ACI - 9.3.2.1/	

SATISFY FLEXURE

TWO WAY - FOOTING FLEXURE DESIGN

(DOES NOT REQURIED, USE MIN. REINF.)

TYPICAL HORIZONTAL REINFORCEMENT	#4 @12 in. o-c		
Mu - (Two Way) =	0.00	kip-ft. /Strength Level/	
As, prov =	0.200	in^2	
As, temp =	0.173	in^2	***OK***
d =	8"		
a =	0.47	in.	
ϕMn =	6.99	kip-ft. /Strength Level/	
ϕ=	0.9	/ACI - 9.3.2.1/	

SATISFY FLEXURE

SHEET NO: _____

PROJECT NO: _____

THANG LE, S.E.
STRUCTURAL ENGINEER
319 E. Foothill Blvd., Arcadia, CA 91006 - Suite C
Phone: (626) 538-2702

Project: ESSEX **Mark: F26**

CHECK CONTINUOUS "L" SHAPED FOOTING

DEMAND

Total Wall Length =	26	ft.	
Wall Thickness =	8	in.	
Pu =	56.87	kip / Strength Level	
Wall Earth Pressure Moment =	0	kip-ft	/see basement calc./
Allowable Soil Bearing =	2600	psf	
fy =	60000	psi	
Concrete Strength =	2500	psi	
Concrete Self Weight =	150	pcf	

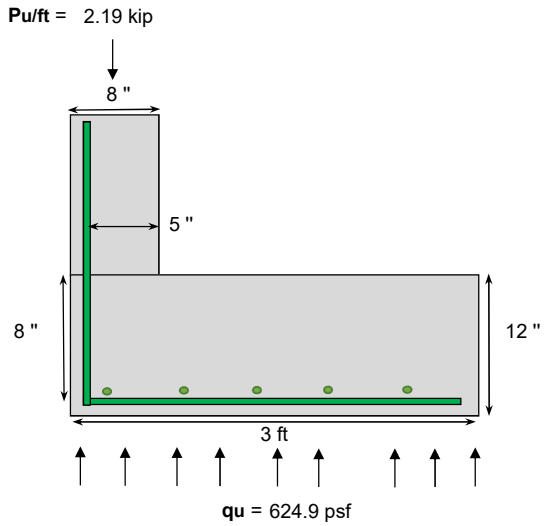

DEMAND LOAD PER FOOT

Pu=	2187.31	lb/ft
Wall Earth Pressure Moment =	0.00	lb-ft/ft
Eccentricity Moment =	1895.67	lb-ft
Total Moment, Mu =	1895.67	lb-ft
e =	0.87	ft.

Base Length=	2.5	ft
Foot Thickness, t =	12	in.
Net Soil Bearing =	2600	psf
qu =	624.9	psf /Service Level/

SATISFY BEARING PRESSURE

DESIGN IS ADEQUATE

FOOTING SHEAR DESIGN

Vu =	937.4	lb
ϕVn =	7200.0	lb

SATISFY SHEAR

FOOTING FLEXURE DESIGN

TYPICAL HORIZONTAL REINFORCEMENT	# 5 @16 in. o-c		
As, prov =	0.230	in^2	
As, temp =	0.173	in^2	OK
d =	8 "		
a =	0.541	in.	
ϕMn =	8003.2	lb-ft	

SATISFY FLEXURE

WALL FLEXURE DESIGN

TYPICAL VERTICAL REINFORCEMENT	# 5 @12 in. o-c		/see basement calc./
As, prov =	0.307	in^2	
As, temp =	0.108	in^2	OK
d =	5 "		
a =	0.722	in.	
ϕMn =	6404.6	lb-ft	

SATISFY FLEXURE

SHEAR WALL FOOTINGS

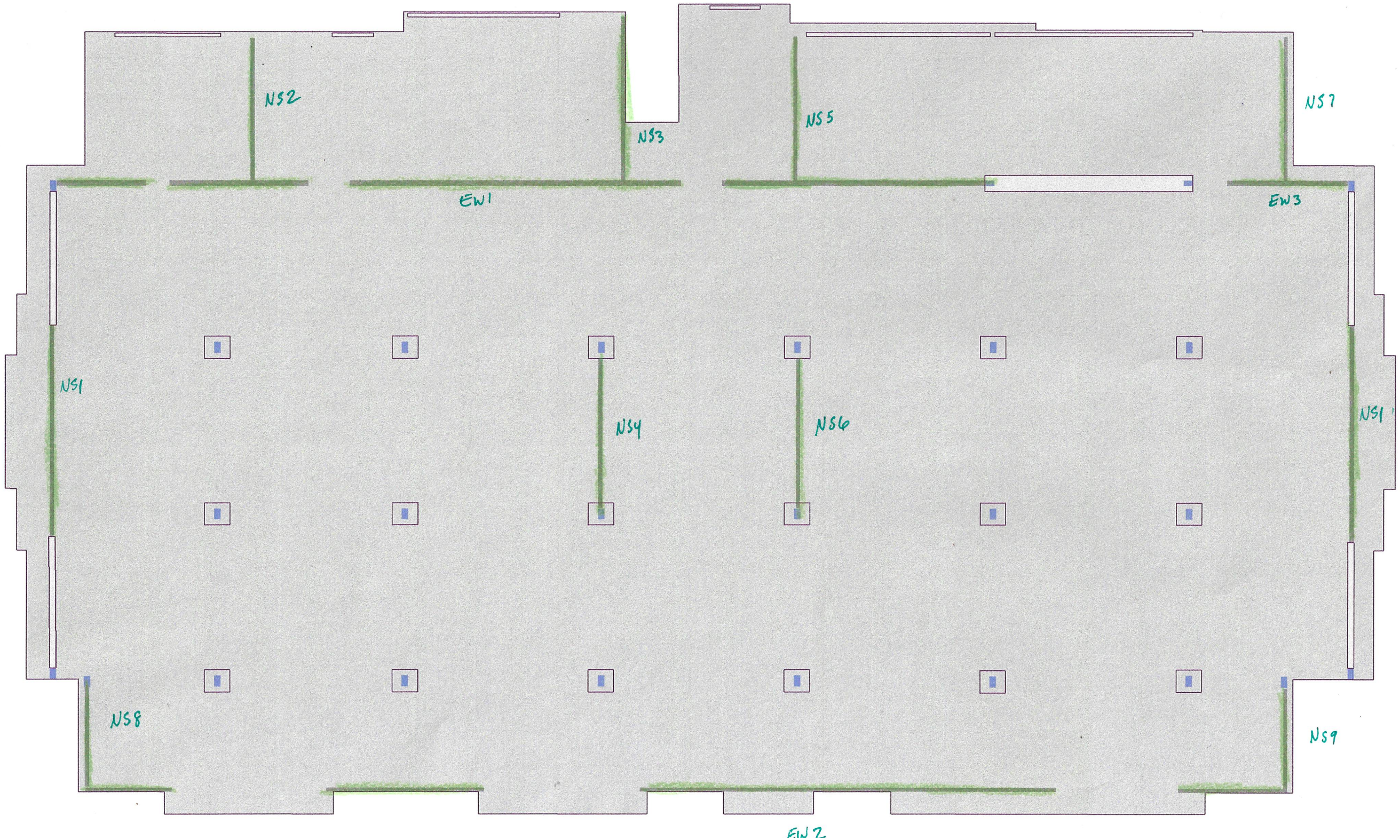

*DESIGN BASED ON GOVERNING SHEAR LOAD COMBINATION AT ASD LEVEL

SHEET NO: _____

THANG LE, S.E.
STRUCTURAL ENGINEER

319 E. Foothill Blvd., Arcadia, California 91006 - Suite C

Phone: (626) 538 - 2702

PROJECT NO: _____

Project: ESSEX **Mark:** EW1

CONTINUOUS FOOTING DESIGN

DEMAND

Total Wall Length =	145	ft.
Wall Thickness =	12	in.
Pu =	1669.81	kip. /Strength Level/
Allowable Soil Bearing =	3000	psf
fy =	60000	psi
Concrete Strength =	2500	psf
Concrete Self Weight =	150	pcf

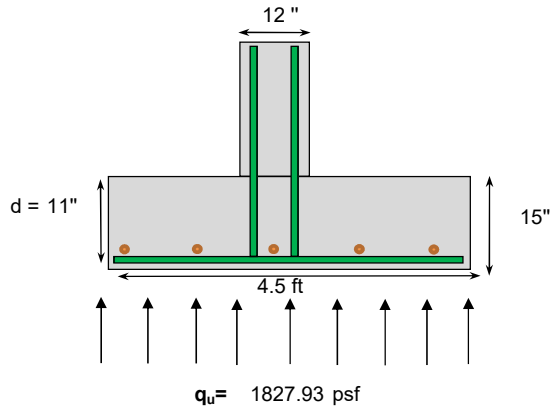

PROPERTIES & DESIGN

Pu=	11.52	kip/ft
Mu - (One way) =	3.92	kip-ft. /Strength Level/
Mu - (Two Way) =	DOES NOT REQUIRED	
Footing - Base Length =	145	ft.
Footing - Base Width =	4.5	ft.
Footing Thickness =	15	in.
Net Soil Bearing =	3000	psf
q_u=	1827.93	psf. /Service Level/

SATISFY BEARING PRESSURE

DESIGN IS ADEQUATE

FOOTING SHEAR DESIGN

Vu =	2.13	kips. /Strength Level/
ϕVn =	9.90	kips. /Strength Level/
ϕ=	0.75	/ACI - 9.3.2.3/

SATISFY SHEAR

ONE WAY - FOOTING FLEXURE DESIGN

TYPICAL HORIZONTAL REINFORCEMENT	#6 @16 in. o-c		
As, prov =	0.330	in^2	
As, temp =	0.238	in^2	***OK***
d =	11"		
a =	0.78	in.	
ϕMn =	15.76	kip-ft. /Strength Level/	
ϕ=	0.9	/ACI - 9.3.2.1/	

SATISFY FLEXURE

TWO WAY - FOOTING FLEXURE DESIGN

(DOES NOT REQURIED, USE MIN. REINF.)

TYPICAL HORIZONTAL REINFORCEMENT	#4 @12 in. o-c		
Mu - (Two Way) =	0.00	kip-ft. /Strength Level/	
As, prov =	0.200	in^2	
As, temp =	0.238	in^2	***OK***
d =	11"		
a =	0.47	in.	
ϕMn =	9.69	kip-ft. /Strength Level/	
ϕ=	0.9	/ACI - 9.3.2.1/	

SATISFY FLEXURE

SHEET NO: _____

THANG LE, S.E.
STRUCTURAL ENGINEER

319 E. Foothill Blvd., Arcadia, California 91006 - Suite C

Phone: (626) 538 - 2702

PROJECT NO: _____

Project: ESSEX **Mark:** EW2

CONTINUOUS FOOTING DESIGN

DEMAND

Total Wall Length =	188	ft.
Wall Thickness =	8	in.
Pu =	801.22	kip. /Strength Level/
Allowable Soil Bearing =	2500	psf
fy =	60000	psi
Concrete Strength =	2500	psf
Concrete Self Weight =	150	pcf

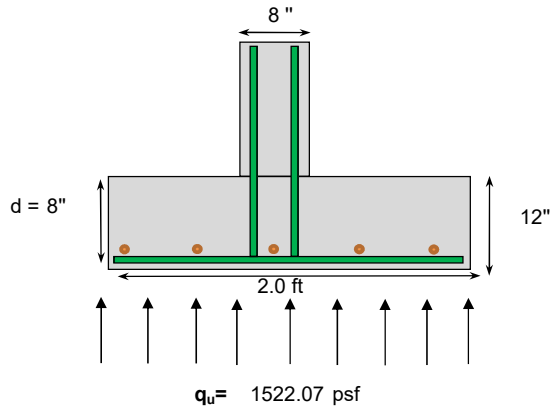

PROPERTIES & DESIGN

Pu=	4.26	kip/ft
Mu - (One way) =	0.47	kip-ft. /Strength Level/
Mu - (Two Way) =	DOES NOT REQUIRED	
Footing - Base Length =	188	ft.
Footing - Base Width =	2	ft.
Footing Thickness =	12	in.
Net Soil Bearing =	2500	psf
q_u=	1522.07	psf. /Service Level/

SATISFY BEARING PRESSURE

DESIGN IS ADEQUATE

FOOTING SHEAR DESIGN

Vu =	0.00	kips. /Strength Level/
ϕVn =	7.20	kips. /Strength Level/
ϕ=	0.75	/ACI - 9.3.2.3/

SATISFY SHEAR

ONE WAY - FOOTING FLEXURE DESIGN

TYPICAL HORIZONTAL REINFORCEMENT	#5 @12 in. o-c		
As, prov =	0.310	in^2	
As, temp =	0.173	in^2	*OK*
d =	8"		
a =	0.73	in.	
ϕMn =	10.65	kip-ft. /Strength Level/	
ϕ=	0.9	/ACI - 9.3.2.1/	

SATISFY FLEXURE

TWO WAY - FOOTING FLEXURE DESIGN

(DOES NOT REQURIED, USE MIN. REINF.)

TYPICAL HORIZONTAL REINFORCEMENT	#4 @12 in. o-c		
Mu - (Two Way) =	0.00	kip-ft. /Strength Level/	
As, prov =	0.200	in^2	
As, temp =	0.173	in^2	*OK*
d =	8"		
a =	0.47	in.	
ϕMn =	6.99	kip-ft. /Strength Level/	
ϕ=	0.9	/ACI - 9.3.2.1/	

SATISFY FLEXURE

THANG LE, S.E.
STRUCTURAL ENGINEER
319 E. Foothill Blvd., Arcadia, California 91006 - Suite C
Phone: (626) 538 - 2702

Project: Essex **Shear Wall Footing ID:** EW3 */1 Stories /*

CONCRETE SHEAR WALL FOOTING DESIGN

PROPERTY OF WALL & DEMAND

Thickness :	0.667	ft
Length :	19	ft

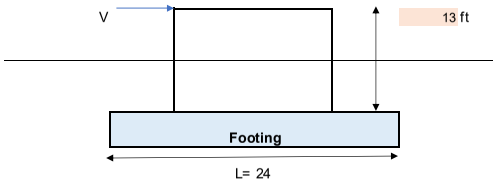

Max Moment =	890.64	kips	*/Governing Load from RAM/*
Moment, M_o =	667.98	kips-ft	*/25% Reduction in Moment per ASCE 7-10 (12.13.4)*
Total Axial Load, P_L =	117.95	kips	
Eccentricity, e =	0.00	ft	

Free Body Diagram For Footing

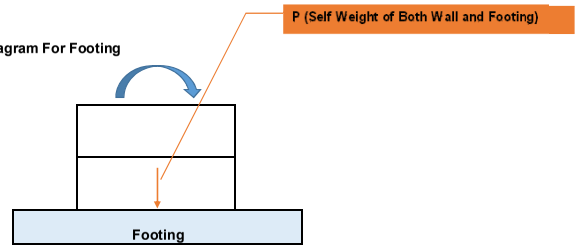

Distance From Tip Point to Axial Force, "b" =	12.00 ft	-	Overturning Moment, M_o=	668.0		
		-	Resisting Moment, M_R =	1415.4	kips-ft	/(P*b) + (C*z)/
			Check: M_R/M_o=	2.1	OK	

PROPERTY OF FOOTING

Footing - Base Length, L =	24	ft.		
Footing - Base Width, w =	4.5	ft.		
Footing - Area, A =	108	ft^2.		
Footing - Thickness, t =	15	in.	-	/1.3 ft/
Steel Strength, F_y =	60000	psi		
Concrete Strength, F_c =	2500	psf		
Concrete Self Weight =	150	pcf		
Allowable Bearing Pressure=	3000	psf	-	*/Increase 33% for lateral * allowable bearing presssure=* 3990 psf

CHECK ALLOWABLE BEARING PRESSURE

$$\sigma = \frac{P}{A} \pm \frac{M}{S} \pm \frac{Pe}{S}$$

where, S = Section of the modules of the Footing =

$$S = \frac{wl^2}{6} = 432.00 \text{ cf}$$

$$\sigma = \frac{117.95}{108} \pm \frac{667.98}{432.00} \pm \frac{0.00}{432.00}$$

σ =	1.09	±	1.55	+	0.00	=	2.64 *ksf*	*/when it is Plus/*	<	3.99 ksf	***THE ALLOWABLE BEARING PRESSURE IS OK***
						=	-0.45 *ksf*	*/when it is Minus/*	<	3.99 ksf	***THE ALLOWABLE BEARING PRESSURE IS OK***

SHEET NO: _____

THANG LE, S.E.
STRUCTURAL ENGINEER

319 E. Foothill Blvd., Arcadia, California 91006 - Suite C

Phone: (626) 538 - 2702

PROJECT NO: _____

Project: Essex Project **Mark:** EW3

CONTINUOUS FOOTING DESIGN

DEMAND

*SL=SERVICE LEVEL

Total Wall Length =	19	ft.
Wall Thickness =	8	in.
Pu =	149.93	kip. /SL/
Mu=	1484	kip/SL
Allowable Soil Bearing =	2660	psf
fy =	60000	psi
Concrete Strength =	3000	psf
Concrete Self Weight =	150	pcf

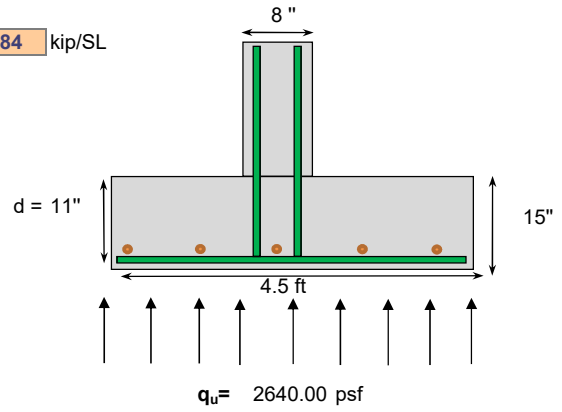

PROPERTIES & DESIGN

Pu=	7.89	kip/ft
Mu - (One way) =	6.79	kip-ft. /Strength Level/
Mu - (Two Way) =	DOES NOT REQUIRED	
Footing - Base Length =	16	ft.
Footing - Base Width =	4.5	ft.
Footing Thickness =	15	in.
Net Soil Bearing =	3999	psf
q_u=	2640.00	psf. /Service Level/

SATISFY BEARING PRESSURE

DESIGN IS ADEQUATE

FOOTING SHEAR DESIGN

Vu =	3.70	kips. /Strength Level/
ϕVn =	10.84	kips. /Strength Level/
ϕ=	0.75	/ACI - 9.3.2.3/

SATISFY SHEAR

ONE WAY - FOOTING FLEXURE DESIGN

TYPICAL HORIZONTAL REINFORCEMENT	#6 @16 in. o-c		
As, prov =	0.330	in^2	
As, temp =	0.238	in^2	*OK*
d =	11"		
a =	0.65	in.	
ϕMn =	15.85	kip-ft. /Strength Level/	
ϕ=	0.9	/ACI - 9.3.2.1/	

SATISFY FLEXURE

TWO WAY - FOOTING FLEXURE DESIGN

(DOES NOT REQURIED, USE MIN. REINF.)

TYPICAL HORIZONTAL REINFORCEMENT	#5 @12 in. o-c		
Mu - (Two Way) =	4.16	kip-ft. /Strength Level/	
As, prov =	0.310	in^2	
As, temp =	0.238	in^2	*OK*
d =	11"		
a =	0.61	in.	
ϕMn =	14.92	kip-ft. /Strength Level/	
ϕ=	0.9	/ACI - 9.3.2.1/	

SATISFY FLEXURE

THANG LE, S.E.
STRUCTURAL ENGINEER
319 E. Foothill Blvd., Arcadia, California 91006 - Suite C
Phone: (626) 538 - 2702

Project: Essex **Shear Wall Footing ID:** NS1 */1 Stories /*

CONCRETE SHEAR WALL FOOTING DESIGN

PROPERTY OF WALL & DEMAND

Thickness : 0.667 ft
Length : 38 ft

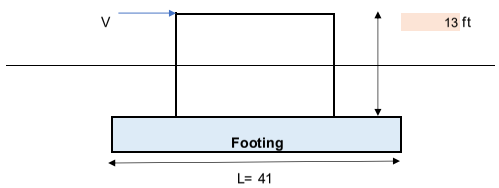

Max Moment = 2417.77 kips */Governing Load from RAM/*
Moment, M_o = 1813.33 kips-ft */25% Reduction in Moment per ASCE 7-10 (12.13.4) AT SERVICE*

Total Axial Load, P_L = 330.05 kips
Eccentricity, e = 0.00 ft

Free Body Diagram For Footing

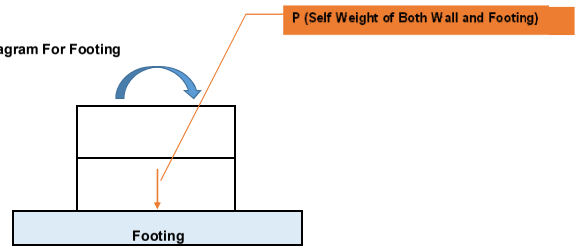

Distance From Tip Point to Axial Force, "b" = 20.50 ft - **Overturning Moment, M_o=** 1813.3
- **Resisting Moment, M_R =** 6766.0 kips-ft /(P*b) + (C*z)/
Check: $M_R/M_{o=}$ 3.7 OK

PROPERTY OF FOOTING

Footing - Base Length, L =	41	ft.	
Footing - Base Width, w =	3.33	ft.	
Footing - Area, A =	136.53	ft^2.	
Footing - Thickness, t =	15	in.	- /1.3 ft/
Steel Strength, F_y =	60000	psi	
Concrete Strength, F_c =	2500	psf	
Concrete Self Weight =	150	pcf	
Allowable Bearing Pressure=	2766	psf	- */Increase 33% for lateral * allowable bearing presssure=* 3678.78 psf

CHECK ALLOWABLE BEARING PRESSURE

$$\sigma = \frac{P}{A} \pm \frac{M}{S} \pm \frac{Pe}{S}$$

where, S = Section of the modules of the Footing =

$$S = \frac{wl^2}{6} = 932.96 \text{ cf}$$

$$\sigma = \frac{235.75}{136.53} \pm \frac{1813.33}{932.96}$$

$$\sigma = 1.73 \pm 1.94$$

= **3.67** *ksf* */when it is Plus/* < **3.67878** ksf ***THE ALLOWABLE BEARING PRESSURE IS OK***
= **-0.22** *ksf* */when it is Minus/* < **3.67878** ksf ***THE ALLOWABLE BEARING PRESSURE IS OK***

SHEET NO: _____

PROJECT NO: _____

THANG LE, S.E.
STRUCTURAL ENGINEER
319 E. Foothill Blvd., Arcadia, CA 91006 - Suite C
Phone: (626) 538-2702

Project: Westminster Project **Mark: NS1**

CHECK CONTINUOUS "L" SHAPED FOOTING

DEMAND

*SL=Service Level

Total Wall Length =	38	ft.
Wall Thickness =	8	in.
Pu =	330.05	kip/SL
Wall Earth Pressure Moment =	0	kip-ft
Allowable Soil Bearing =	3679	psf
fy =	60000	psi
Concrete Strength =	3000	psi
Concrete Self Weight =	150	pcf

M= 138.83 kip/SL /see basement calc./

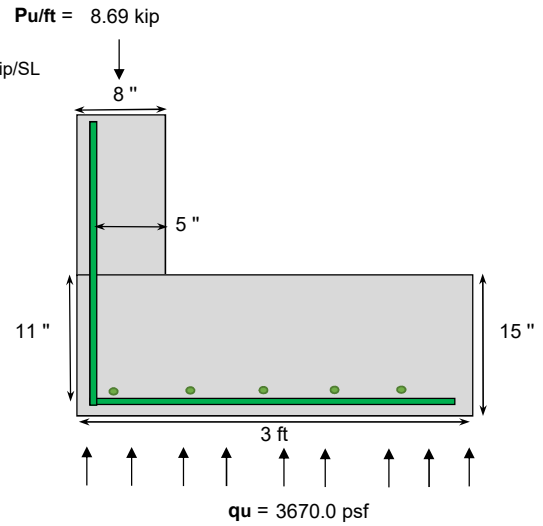

DEMAND LOAD PER FOOT

Pu=	8685.53	lb/ft
Wall Earth Pressure Moment =	0.00	lb-ft/ft
Eccentricity Moment =	10997.77	lb-ft
Total Moment, Mu =	10997.77	lb-ft
e =	1.27	ft.

Base Length=	3.33	ft
Foot Thickness, t =	15	in.
Net Soil Bearing =	3679	psf
qu =	3670.0	psf /Service Level/

SATISFY BEARING PRESSURE

DESIGN IS ADEQUATE

FOOTING SHEAR DESIGN

Vu =	7633.6	lb
ϕVn =	10844.9	lb

SATISFY SHEAR

FOOTING FLEXURE DESIGN

TYPICAL HORIZONTAL REINFORCEMENT	# 5 @12 in. o-c		
As, prov =	0.307	in^2	
As, temp =	0.238	in^2	OK
d =	11 "		
a =	0.602	in.	
ϕMn =	14771.2	lb-ft	

SATISFY FLEXURE

WALL FLEXURE DESIGN

/see basement calc./

TYPICAL VERTICAL REINFORCEMENT	# 5 @12 in. o-c		
As, prov =	0.307	in^2	
As, temp =	0.108	in^2	OK
d =	5 "		
a =	0.602	in.	
ϕMn =	6487.7	lb-ft	

SHEET NO: _____

THANG LE, S.E.
STRUCTURAL ENGINEER

319 E. Foothill Blvd., Arcadia, California 91006 - Suite C

Phone: (626) 538 - 2702

PROJECT NO: _____

Project: ESSEX **Mark:** NS2

CONTINUOUS FOOTING DESIGN

DEMAND

Total Wall Length =	21	ft.
Wall Thickness =	8	in.
Pu =	90.41	kip. /Strength Level/
Allowable Soil Bearing =	2500	psf
fy =	60000	psi
Concrete Strength =	2500	psf
Concrete Self Weight =	150	pcf

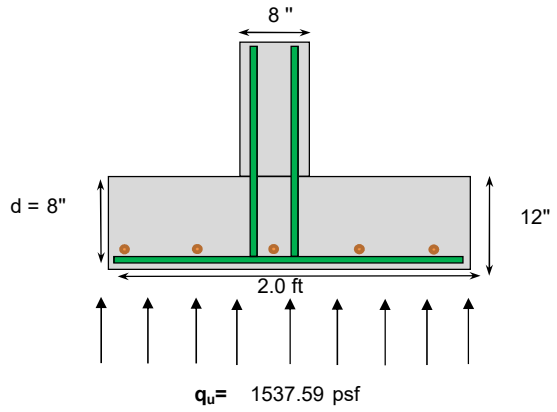

PROPERTIES & DESIGN

Pu=	4.31	kip/ft
Mu - (One way) =	0.48	kip-ft. /Strength Level/
Mu - (Two Way) =	DOES NOT REQUIRED	
Footing - Base Length =	21	ft.
Footing - Base Width =	2	ft.
Footing Thickness =	12	in.
Net Soil Bearing =	2500	psf
q_u=	1537.59	psf. /Service Level/

SATISFY BEARING PRESSURE

DESIGN IS ADEQUATE

FOOTING SHEAR DESIGN

Vu =	0.00	kips. /Strength Level/
ϕVn =	7.20	kips. /Strength Level/
ϕ=	0.75	/ACI - 9.3.2.3/

SATISFY SHEAR

ONE WAY - FOOTING FLEXURE DESIGN

TYPICAL HORIZONTAL REINFORCEMENT	#5 @12 in. o-c		
As, prov =	0.310	in^2	
As, temp =	0.173	in^2	***OK***
d =	8"		
a =	0.73	in.	
ϕMn =	10.65	kip-ft. /Strength Level/	
ϕ=	0.9	/ACI - 9.3.2.1/	

SATISFY FLEXURE

TWO WAY - FOOTING FLEXURE DESIGN

(DOES NOT REQURIED, USE MIN. REINF.)

TYPICAL HORIZONTAL REINFORCEMENT	#4 @12 in. o-c		
Mu - (Two Way) =	0.00	kip-ft. /Strength Level/	
As, prov =	0.200	in^2	
As, temp =	0.173	in^2	***OK***
d =	8"		
a =	0.47	in.	
ϕMn =	6.99	kip-ft. /Strength Level/	
ϕ=	0.9	/ACI - 9.3.2.1/	

SATISFY FLEXURE

SHEET NO: _____

PROJECT NO: _____

THANG LE, S.E.
STRUCTURAL ENGINEER
319 E. Foothill Blvd., Arcadia, CA 91006 - Suite C
Phone: (626) 538-2702

Project: ESSEX **Mark: NS2-Moment**

CHECK CONTINUOUS "L" SHAPED FOOTING

DEMAND

Total Wall Length =	4	ft.
Wall Thickness =	8	in.
Pu =	59.45	kip / Strength Level
Wall Earth Pressure Moment =	0	kip-ft **/see basement calc./**
Allowable Soil Bearing =	3769	psf
fy =	60000	psi
Concrete Strength =	2500	psi
Concrete Self Weight =	150	pcf

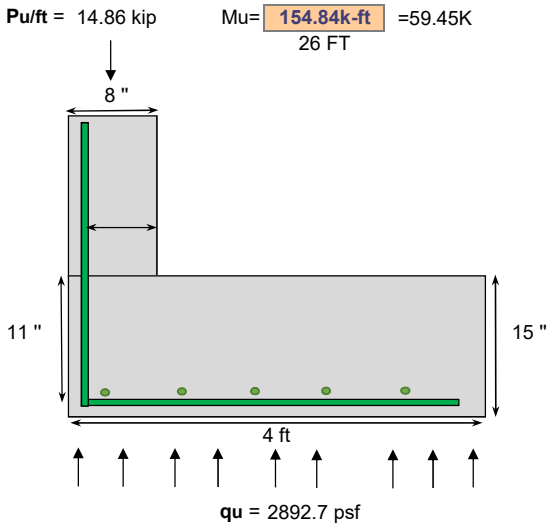

DEMAND LOAD PER FOOT

Pu=	14862.50	lb/ft
Wall Earth Pressure Moment =	0.00	lb-ft/ft
Eccentricity Moment =	13512.59	lb-ft
Total Moment, Mu =	13512.59	lb-ft
e =	0.91	ft.

Base Length=	3.67	ft
Foot Thickness, t =	15	in.
Net Soil Bearing =	3769	psf
qu =	2892.7	psf /Service Level/

SATISFY BEARING PRESSURE

DESIGN IS ADEQUATE

FOOTING SHEAR DESIGN

Vu =	7000.2	lb
ϕVn =	9900.0	lb

SATISFY SHEAR

FOOTING FLEXURE DESIGN

TYPICAL HORIZONTAL REINFORCEMENT	# 5 @12 in. o-c	
As, prov =	0.307	in^2
As, temp =	0.238	in^2 **OK**
d =	11 "	
a =	0.722	in.
ϕMn =	14688.1	lb-ft

SATISFY FLEXURE

SHEET NO: _____

THANG LE, S.E.
STRUCTURAL ENGINEER

319 E. Foothill Blvd., Arcadia, California 91006 - Suite C

Phone: (626) 538 - 2702

PROJECT NO: _____

Project: ESSEX **Mark:** NS3

CONTINUOUS FOOTING DESIGN

DEMAND

Total Wall Length =	24.5	ft.
Wall Thickness =	8	in.
Pu =	134.12	kip. /Strength Level/
Allowable Soil Bearing =	2500	psf
fy =	60000	psi
Concrete Strength =	2500	psf
Concrete Self Weight =	150	pcf

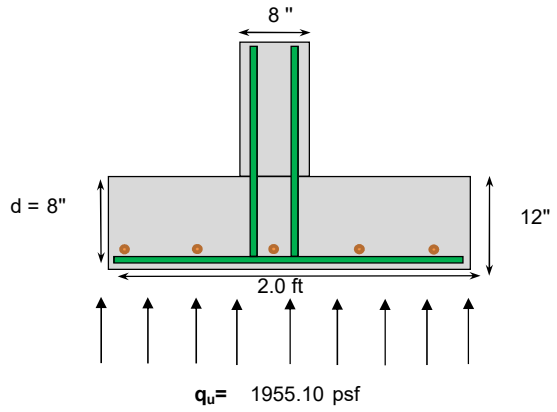

PROPERTIES & DESIGN

Pu=	5.47	kip/ft
Mu - (One way) =	0.61	kip-ft. /Strength Level/
Mu - (Two Way) =	DOES NOT REQUIRED	
Footing - Base Length =	24.5	ft.
Footing - Base Width =	2	ft.
Footing Thickness =	12	in.
Net Soil Bearing =	2500	psf
q_u=	1955.10	psf. /Service Level/

SATISFY BEARING PRESSURE

DESIGN IS ADEQUATE

FOOTING SHEAR DESIGN

Vu =	0.00	kips. /Strength Level/
ϕVn =	7.20	kips. /Strength Level/
ϕ=	0.75	/ACI - 9.3.2.3/

SATISFY SHEAR

ONE WAY - FOOTING FLEXURE DESIGN

TYPICAL HORIZONTAL REINFORCEMENT	#5 @12 in. o-c		
As, prov =	0.310	in^2	
As, temp =	0.173	in^2	***OK***
d =	8"		
a =	0.73	in.	
ϕMn =	10.65	kip-ft. /Strength Level/	
ϕ=	0.9	/ACI - 9.3.2.1/	

SATISFY FLEXURE

TWO WAY - FOOTING FLEXURE DESIGN

(DOES NOT REQURIED, USE MIN. REINF.)

TYPICAL HORIZONTAL REINFORCEMENT	#4 @12 in. o-c		
Mu - (Two Way) =	0.00	kip-ft. /Strength Level/	
As, prov =	0.200	in^2	
As, temp =	0.173	in^2	***OK***
d =	8"		
a =	0.47	in.	
ϕMn =	6.99	kip-ft. /Strength Level/	
ϕ=	0.9	/ACI - 9.3.2.1/	

SATISFY FLEXURE

SHEET NO: _____

PROJECT NO: _____

THANG LE, S.E.
STRUCTURAL ENGINEER
319 E. Foothill Blvd., Arcadia, CA 91006 - Suite C
Phone: (626) 538-2702

Project: ESSEX **Mark: NS3-Moment**

CHECK CONTINUOUS "L" SHAPED FOOTING

DEMAND

Total Wall Length =	4	ft.
Wall Thickness =	8	in.
Pu =	55.49	kip / Strength Level
Wall Earth Pressure Moment =	0	kip-ft **/see basement calc./**
Allowable Soil Bearing =	3769	psf
fy =	60000	psi
Concrete Strength =	2500	psi
Concrete Self Weight =	150	pcf

Pu/ft = 13.87 kip Mu= 1609.44 =55.49K
29

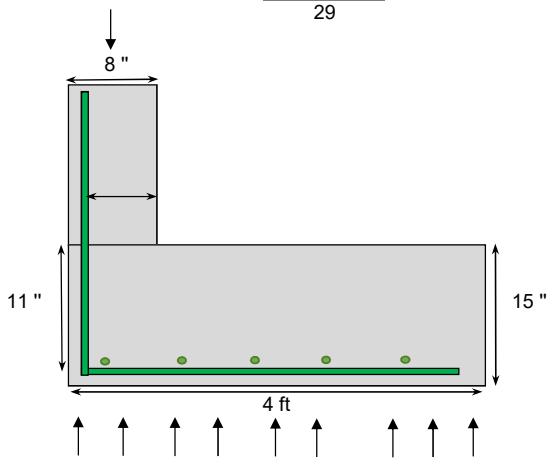

qu = 2700.0 psf

DEMAND LOAD PER FOOT

Pu=	13872.50	lb/ft
Wall Earth Pressure Moment =	0.00	lb-ft/ft
Eccentricity Moment =	12612.51	lb-ft
Total Moment, Mu =	12612.51	lb-ft
e =	0.91	ft.

Base Length=	3.67	ft
Foot Thickness, t =	15	in.
Net Soil Bearing =	3769	psf
qu =	2700.0	psf /Service Level/

SATISFY BEARING PRESSURE

DESIGN IS ADEQUATE

FOOTING SHEAR DESIGN

Vu =	6534.0	lb
ϕVn =	9900.0	lb

SATISFY SHEAR

FOOTING FLEXURE DESIGN

TYPICAL HORIZONTAL REINFORCEMENT	# 5 @12 in. o-c		
As, prov =	0.307	in^2	
As, temp =	0.238	in^2	**OK**
d =	11 "		
a =	0.722	in.	
ϕMn =	14688.1	lb-ft	

SATISFY FLEXURE

THANG LE, S.E.
STRUCTURAL ENGINEER
319 E. Foothill Blvd., Arcadia, California 91006 - Suite C
Phone: (626) 538 - 2702

Project: Essex **Shear Wall Footing ID:** NS4,NS6 */1 Stories /*

CONCRETE SHEAR WALL FOOTING DESIGN

PROPERTY OF WALL & DEMAND

Thickness : 0.667 ft
Length : 27 ft

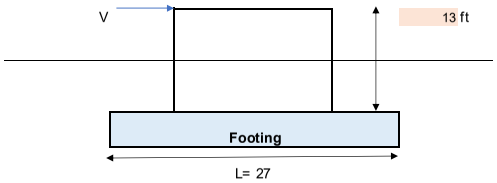

Max Moment = 1715.26 kips */Governing Load from RAM/*
Moment, M_o = 1286.45 kips-ft */25% Reduction in Moment per ASCE 7-10 (12.13.4) AT SERVICE*

Total Axial Load, P_L = 164.38 kips
Eccentricity, e = 0.00 ft

Free Body Diagram For Footing

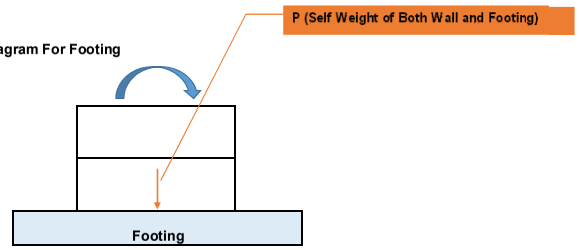

Overturning Moment, M_o= 1286.4
Distance From Tip Point to Axial Force, "b" = 13.50 ft - **Resisting Moment, M_R =** 2219.1 kips-ft /(P*b) + (C*z)/
- **Check: M_R/M_o=** 1.7 OK

PROPERTY OF FOOTING

Footing - Base Length, L =	27	ft.		
Footing - Base Width, w =	4.67	ft.		
Footing - Area, A =	126.09	ft^2.		
Footing - Thickness, t =	15	in.	-	/1.3 ft/
Steel Strength, F_y =	60000	psi		
Concrete Strength, F_c =	2500	psf		
Concrete Self Weight =	150	pcf		
Allowable Bearing Pressure=	3034	psf	-	*/Increase 33% for lateral * allowable bearing presssure=* 4035.22 psf

CHECK ALLOWABLE BEARING PRESSURE

$$\sigma = \frac{P}{A} \pm \frac{M}{S} \pm \frac{Pe}{S}$$

where, S = Section of the modules of the Footing =

$$S = \frac{wl^2}{6} = 567.41 \text{ cf}$$

$$\sigma = \frac{117.41}{126.09} \pm \frac{1286.45}{567.41}$$

$$\sigma = 0.93 \pm 2.27$$

= **3.20** *ksf* */when it is Plus/* < **4.03522** ksf ***THE ALLOWABLE BEARING PRESSURE IS OK***
= **-1.34** *ksf* */when it is Minus/* < **4.03522** ksf ***THE ALLOWABLE BEARING PRESSURE IS OK***

SHEET NO: _____

THANG LE, S.E.
STRUCTURAL ENGINEER

319 E. Foothill Blvd., Arcadia, California 91006 - Suite C

Phone: (626) 538 - 2702

PROJECT NO: _____

Project: Essex Project **Mark:** NS4,NS6

CONTINUOUS FOOTING DESIGN

DEMAND

*SL=SERVICE LEVEL

Total Wall Length =	27	ft.
Wall Thickness =	8	in.
Pu =	164.38	kip. /SL/
Allowable Soil Bearing =	4035	psf
fy =	60000	psi
Concrete Strength =	3000	psf
Concrete Self Weight =	150	pcf

Mu= 1665 kip/SL

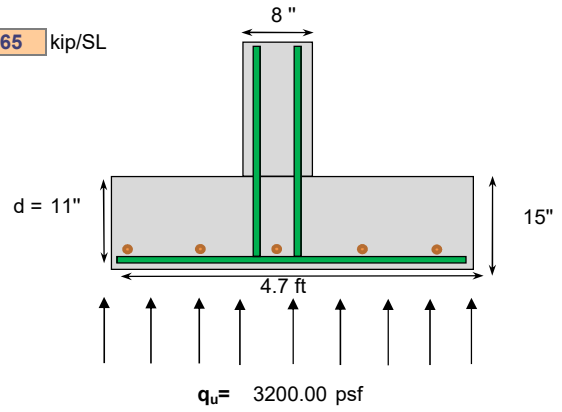

PROPERTIES & DESIGN

Pu=	6.09	kip/ft
Mu - (One way) =	8.97	kip-ft. /Strength Level/
Mu - (Two Way) =	DOES NOT REQUIRED	
Footing - Base Length =	27	ft.
Footing - Base Width =	4.67	ft.
Footing Thickness =	15	in.
Net Soil Bearing =	4035	psf
q_u=	3200.00	psf. /Service Level/

SATISFY BEARING PRESSURE

DESIGN IS ADEQUATE

FOOTING SHEAR DESIGN

Vu =	4.86	kips. /Strength Level/
ϕVn =	10.84	kips. /Strength Level/
ϕ=	0.75	/ACI - 9.3.2.3/

SATISFY SHEAR

ONE WAY - FOOTING FLEXURE DESIGN

TYPICAL HORIZONTAL REINFORCEMENT	#5 @12 in. o-c		
As, prov =	0.310	in^2	
As, temp =	0.238	in^2	*OK*
d =	11"		
a =	0.61	in.	
ϕMn =	14.92	kip-ft. /Strength Level/	
ϕ=	0.9	/ACI - 9.3.2.1/	

SATISFY FLEXURE

TWO WAY - FOOTING FLEXURE DESIGN

(DOES NOT REQURIED, USE MIN. REINF.)

TYPICAL HORIZONTAL REINFORCEMENT	#4 @12 in. o-c		
Mu - (Two Way) =	0.00	kip-ft. /Strength Level/	
As, prov =	0.200	in^2	
As, temp =	0.238	in^2	*OK*
d =	11"		
a =	0.39	in.	
ϕMn =	9.72	kip-ft. /Strength Level/	
ϕ=	0.9	/ACI - 9.3.2.1/	

SATISFY FLEXURE

THANG LE, S.E.
STRUCTURAL ENGINEER
319 E. Foothill Blvd., Arcadia, California 91006 - Suite C
Phone: (626) 538 - 2702

Project: Essex **Shear Wall Footing ID:** NS5 */1 Stories /*

CONCRETE SHEAR WALL FOOTING DESIGN

PROPERTY OF WALL & DEMAND

Thickness :	0.667	ft
Length :	26	ft

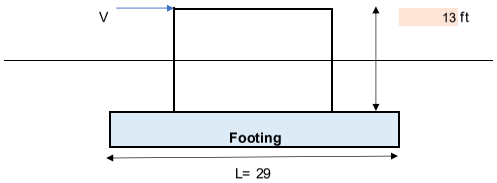

Max Moment =	894.00	kips	*/Governing Load from RAM/*
Moment, M_o =	670.50	kips-ft	*/25% Reduction in Moment per ASCE 7-10 (12.13.4) AT SERVICE*
Total Axial Load, P_L =	69.18	kips	
Eccentricity, e =	0.00	ft	

Free Body Diagram For Footing

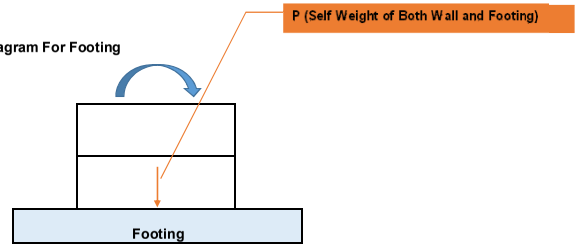

Distance From Tip Point to Axial Force, "b" =	14.50 ft	-	Overturning Moment, M_o=	670.5		
		-	Resisting Moment, M_R =	1003.1	kips-ft	/(P*b) + (C*z)/
			Check: M_R/M_o=	1.5	OK	

PROPERTY OF FOOTING

Footing - Base Length, L =	29	ft.		
Footing - Base Width, w =	2	ft.		
Footing - Area, A =	58	ft^2.		
Footing - Thickness, t =	12	in.	-	/1.0 ft/
Steel Strength, F_y =	60000	psi		
Concrete Strength, F_c =	2500	psf		
Concrete Self Weight =	150	pcf		
Allowable Bearing Pressure=	2500	psf	-	*/Increase 33% for lateral * allowable bearing presssure=* 3325 psf

CHECK ALLOWABLE BEARING PRESSURE

$$\sigma = \frac{P}{A} \pm \frac{M}{S} \pm \frac{Pe}{S}$$

where, S = Section of the modules of the Footing =

$$S = \frac{wl^2}{6} = 280.33 \text{ cf}$$

$$\sigma = \frac{49.41}{58} \pm \frac{670.50}{280.33}$$

σ =	0.85	±	2.39	=	3.24 *ksf*	*/when it is Plus/*	<	3.325 ksf ***THE ALLOWABLE BEARING PRESSURE IS OK***
				=	-1.54 *ksf*	*/when it is Minus/*	<	3.325 ksf ***THE ALLOWABLE BEARING PRESSURE IS OK***

SHEET NO: _____

THANG LE, S.E.
STRUCTURAL ENGINEER

319 E. Foothill Blvd., Arcadia, California 91006 - Suite C

Phone: (626) 538 - 2702

PROJECT NO: _____

Project: Essex Project **Mark:** NS5

CONTINUOUS FOOTING DESIGN

DEMAND

*SL=SERVICE LEVEL

Total Wall Length =	26	ft.
Wall Thickness =	8	in.
Pu =	69.18	kip. /SL/
Allowable Soil Bearing =	3325	psf
fy =	60000	psi
Concrete Strength =	3000	psf
Concrete Self Weight =	150	pcf

Mu= 894 kip/SL

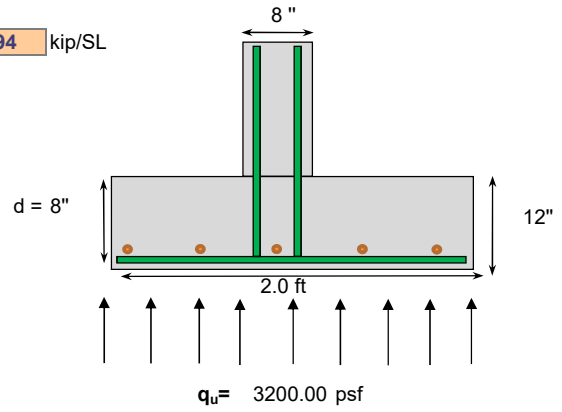

PROPERTIES & DESIGN

Pu=	2.66	kip/ft
Mu - (One way) =	1.00	kip-ft. /Strength Level/
Mu - (Two Way) =	SEE TWO WAY FLEXURE DESIGN	
Footing - Base Length =	29	ft.
Footing - Base Width =	2	ft.
Footing Thickness =	12	in.
Net Soil Bearing =	4035	psf
q_u=	3200.00	psf. /Service Level/

SATISFY BEARING PRESSURE

DESIGN IS ADEQUATE

FOOTING SHEAR DESIGN

Vu =	0.00	kips. /Strength Level/
ϕVn =	7.89	kips. /Strength Level/
ϕ=	0.75	/ACI - 9.3.2.3/

SATISFY SHEAR

ONE WAY - FOOTING FLEXURE DESIGN

TYPICAL HORIZONTAL REINFORCEMENT	#5 @16 in. o-c	
As, prov =	0.233	in^2
As, temp =	0.173	in^2 ***OK***
d =	8"	
a =	0.46	in.
ϕMn =	8.13	kip-ft. /Strength Level/
ϕ=	0.9	/ACI - 9.3.2.1/

SATISFY FLEXURE

TWO WAY - FOOTING FLEXURE DESIGN (DOES REQUIRED.)

TYPICAL HORIZONTAL REINFORCEMENT	#4 @12 in. o-c	
Mu - (Two Way) =	5.04	kip-ft. /Strength Level/
As, prov =	0.200	in^2
As, temp =	0.173	in^2 ***OK***
d =	8"	
a =	0.39	in.
ϕMn =	7.02	kip-ft. /Strength Level/
ϕ=	0.9	/ACI - 9.3.2.1/

SATISFY FLEXURE

SHEET NO: _____

THANG LE, S.E.
STRUCTURAL ENGINEER
319 E. Foothill Blvd., Arcadia, CA 91006 - Suite C
Phone: (626) 538-2702

PROJECT NO: _____

Project: Essex Project **Mark: F7**

CHECK CONTINUOUS "L" SHAPED FOOTING

DEMAND

Total Wall Length =	21	ft.	
Wall Thickness =	8	in.	
Pu =	113.29	kip / Strength Level	
Wall Earth Pressure Moment =	0	kip-ft	/see basement calc./
Allowable Soil Bearing =	2500	psf	
fy =	60000	psi	
Concrete Strength =	3000	psi	
Concrete Self Weight =	150	pcf	

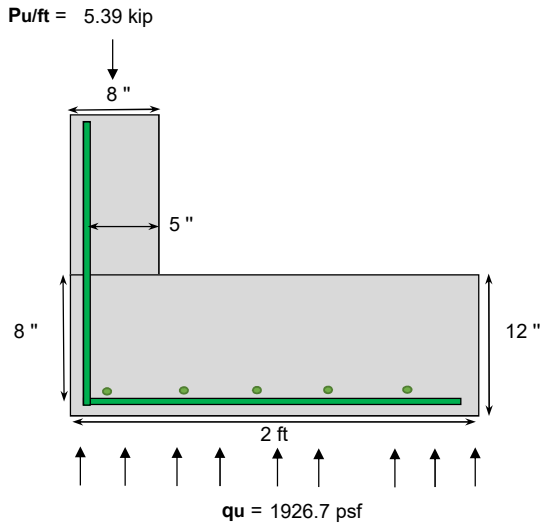

DEMAND LOAD PER FOOT

Pu=	5394.76	lb/ft
Wall Earth Pressure Moment =	0.00	lb-ft/ft
Eccentricity Moment =	4495.63	lb-ft
Total Moment, Mu =	4495.63	lb-ft
e =	0.83	ft.

Base Length=	2	ft
Foot Thickness, t =	12	in.
Net Soil Bearing =	2500	psf
qu =	1926.7	psf /Service Level/

SATISFY BEARING PRESSURE

DESIGN IS ADEQUATE

FOOTING SHEAR DESIGN

Vu =	1926.7	lb
ϕVn =	7887.2	lb

SATISFY SHEAR

FOOTING FLEXURE DESIGN

TYPICAL HORIZONTAL REINFORCEMENT	# 5 @12 in. o-c		
As, prov =	0.307	in^2	
As, temp =	0.173	in^2	OK
d =	8 "		
a =	0.602	in.	
ϕMn =	10629.4	lb-ft	

SATISFY FLEXURE

WALL FLEXURE DESIGN

TYPICAL VERTICAL REINFORCEMENT	# 5 @12 in. o-c		/see basement calc./
As, prov =	0.307	in^2	
As, temp =	0.108	in^2	OK
d =	5 "		
a =	0.602	in.	
ϕMn =	6487.7	lb-ft	

SATISFY FLEXURE

SHEET NO: _____

PROJECT NO: _____

THANG LE, S.E.
STRUCTURAL ENGINEER
319 E. Foothill Blvd., Arcadia, CA 91006 - Suite C
Phone: (626) 538-2702

Project: ESSEX **Mark: NS7-Moment**

CHECK CONTINUOUS "L" SHAPED FOOTING

DEMAND

Total Wall Length =	4	ft.
Wall Thickness =	8	in.
Pu =	54.38	kip / Strength Level
Wall Earth Pressure Moment =	0	kip-ft **/see basement calc./**
Allowable Soil Bearing =	3769	psf
fy =	60000	psi
Concrete Strength =	2500	psi
Concrete Self Weight =	150	pcf

Pu/ft = 13.60 kip Mu= 1359.48 =54.38
25

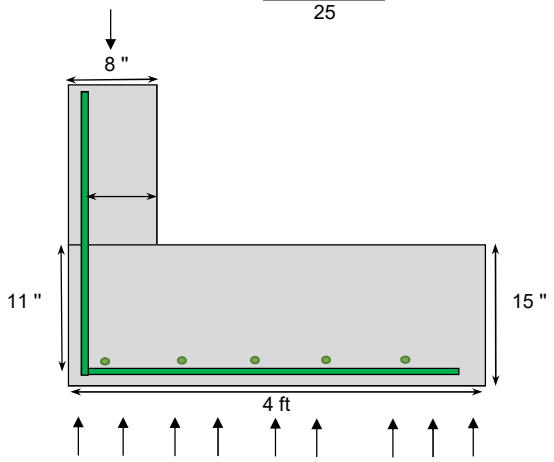

qu = 2646.0 psf

DEMAND LOAD PER FOOT

Pu=	13595.00	lb/ft
Wall Earth Pressure Moment =	0.00	lb-ft/ft
Eccentricity Moment =	12360.21	lb-ft
Total Moment, Mu =	12360.21	lb-ft
e =	0.91	ft.

Base Length=	3.67	ft
Foot Thickness, t =	15	in.
Net Soil Bearing =	3769	psf
qu =	2646.0	psf /Service Level/

SATISFY BEARING PRESSURE

DESIGN IS ADEQUATE

FOOTING SHEAR DESIGN

Vu =	6403.3	lb
ϕVn =	9900.0	lb

SATISFY SHEAR

FOOTING FLEXURE DESIGN

TYPICAL HORIZONTAL REINFORCEMENT	# 5 @12 in. o-c	
As, prov =	0.307	in^2
As, temp =	0.238	in^2 **OK**
d =	11 "	
a =	0.722	in.
ϕMn =	14688.1	lb-ft

SATISFY FLEXURE

SHEET NO: _____

THANG LE, S.E.
STRUCTURAL ENGINEER

319 E. Foothill Blvd., Arcadia, California 91006 - Suite C

Phone: (626) 538 - 2702

PROJECT NO: _____

Project: ESSEX **Mark:** NS8, NS9

CONTINUOUS FOOTING DESIGN

DEMAND

Total Wall Length =	19	ft.
Wall Thickness =	8	in.
Pu =	40.05	kip. /Strength Level/
Allowable Soil Bearing =	2500	psf
fy =	60000	psi
Concrete Strength =	2500	psf
Concrete Self Weight =	150	pcf

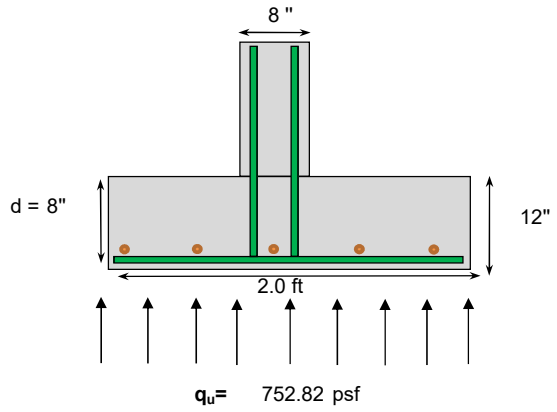

PROPERTIES & DESIGN

Pu=	2.11	kip/ft
Mu - (One way) =	0.23	kip-ft. /Strength Level/
Mu - (Two Way) =	DOES NOT REQUIRED	
Footing - Base Length =	19	ft.
Footing - Base Width =	2	ft.
Footing Thickness =	12	in.
Net Soil Bearing =	2500	psf
q_u=	752.82	psf. /Service Level/

SATISFY BEARING PRESSURE

DESIGN IS ADEQUATE

FOOTING SHEAR DESIGN

Vu =	0.00	kips. /Strength Level/
ϕVn =	7.20	kips. /Strength Level/
ϕ=	0.75	/ACI - 9.3.2.3/

SATISFY SHEAR

ONE WAY - FOOTING FLEXURE DESIGN

TYPICAL HORIZONTAL REINFORCEMENT	#5 @12 in. o-c		
As, prov =	0.310	in^2	
As, temp =	0.173	in^2	***OK***
d =	8"		
a =	0.73	in.	
ϕMn =	10.65	kip-ft. /Strength Level/	
ϕ=	0.9	/ACI - 9.3.2.1/	

SATISFY FLEXURE

TWO WAY - FOOTING FLEXURE DESIGN

(DOES NOT REQURIED, USE MIN. REINF.)

TYPICAL HORIZONTAL REINFORCEMENT	#4 @12 in. o-c		
Mu - (Two Way) =	0.00	kip-ft. /Strength Level/	
As, prov =	0.200	in^2	
As, temp =	0.173	in^2	***OK***
d =	8"		
a =	0.47	in.	
ϕMn =	6.99	kip-ft. /Strength Level/	
ϕ=	0.9	/ACI - 9.3.2.1/	

SATISFY FLEXURE

THANG LE, S.E.
STRUCTURAL ENGINEER
Phone: (626) 731-1539 Fax: (626) 447-3400

CONCRETE WALL LATERAL ANALYSIS

Criteria, Mass and Exposure Data

RAM Frame 17.01.01.05
DataBase: ASD CMU - 12.08.2020 - Essex Project - 02.05.21 02/08/21 14:31:26

CRITERIA:

Rigid End Zones: Ignore Effects
Member Force Output: At Face of Joint
P-Delta: No
Ground Level: Base
Mesh Criteria :
Max. Distance Between Nodes on Mesh Line (ft) : 4.00
Merge Node Tolerance (in) : 0.0100
Geometry Tolerance (in) : 0.0050
Walls Out-of-plane Stiffness Included in Analysis.
Sign considered for Dynamic Load Case Results.
Rigid Links Included at Fixed Beam-to-Wall Locations
Eigenvalue Analysis : Eigen Vectors (Lanczos)

DIAPHRAGM DATA:

Story	Diaph #	Diaph Type
Podium	1	Rigid

Disconnect Internal Nodes of Beams: Yes
Disconnect Nodes outside Slab Boundary: Yes

Semirigid Diaphragm Parameters:
Use Slab Edges for Exterior Boundary
Calculate Diaphragm Mass
Hard Node Density Factor: 1.00

STORY MASS DATA:

Includes Self Mass of:
Beams
Columns (Half mass of columns above and below)
Walls (Half mass of walls above and below)
Slabs/Deck

Calculated Values:

Story	Diaph #	Weight kips	Mass k-s2/ft	MMI ft-k-s2	Xm ft	Ym ft	EccX ft	EccY ft
Podium	1	7030.10	218.33	1150840	167.90	106.89	10.87	7.27

Story	Diaph #	Combine
Podium	1	None

Distributed Mass Values for Pseudo-Flexible or Meshed Diaphragms:

Story	Diaph #	Total Weight kips	Total Mass k-s2/ft
Podium	1	7029.28	218.301

WIND EXPOSURE DATA:

Calculated Values:

Story	Diaph #	Building Extents (ft)				Expose	Parapet
		Min X	Max X	Min Y	Max Y		ft
Podium	1	59.06	276.48	34.60	180.10	Full	0.00

STORY GRAVITY LOADS DATA:

Includes Weight of:

Beams
Columns
Walls
Slabs/Deck

Live Load Reduction (Calculated)

Reducible :	0.00 %
Storage :	0.00 %
Roof :	0.00 %

Calculated Values:

Story	Diaph #	Dead	Xc	Yc	Live	Xc	Yc
		kips	ft	ft	kips	ft	ft
Podium	1	7682.48	168.30	107.40	2290.91	167.28	105.86

Story	Diaph #	Roof	Xc	Yc	Combine
		kips	ft	ft	
Podium	1	0.00	0.00	0.00	None

Building Story Shears

RAM Frame 17.01.01.05
DataBase: ASD CMU - 12.08.2020 - Essex Project - 02.05.21 02/08/21 14:31:26

CRITERIA:

Rigid End Zones: Ignore Effects
Member Force Output: At Face of Joint
P-Delta: No
Ground Level: Base
Mesh Criteria :
Max. Distance Between Nodes on Mesh Line (ft) : 4.00
Merge Node Tolerance (in) : 0.0100
Geometry Tolerance (in) : 0.0050
Walls Out-of-plane Stiffness Included in Analysis.
Sign considered for Dynamic Load Case Results.
Rigid Links Included at Fixed Beam-to-Wall Locations
Eigenvalue Analysis : Eigen Vectors (Lanczos)

Load Case: D DeadLoad RAMUSER

Level	Diaph. #	Shear-X kips	Shear-Y kips
Podium	1	0.00	0.00

Summary - Total Story Shears

Level	Shear-X kips	Change-X kips	Shear-Y kips	Change-Y kips
Podium	0.00	0.00	0.00	0.00

Load Case: Lp PosLiveLoad RAMUSER

Level	Diaph. #	Shear-X kips	Shear-Y kips
Podium	1	0.00	0.00

Summary - Total Story Shears

Level	Shear-X kips	Change-X kips	Shear-Y kips	Change-Y kips
Podium	0.00	0.00	0.00	0.00

Load Case: E1 Seismic - Drift EQ_ASCE716_X_+E_Drft

Level	Diaph. #	Shear-X kips	Shear-Y kips
Podium	1	1687.22	0.00

Summary - Total Story Shears

Level	Shear-X kips	Change-X kips	Shear-Y kips	Change-Y kips
Podium	1687.22	1687.22	0.00	0.00

Building Story Shears

Load Case: E2 Seismic - Drift EQ_ASCE716_X_-E_Drft

Level	Diaph. #	Shear-X kips	Shear-Y kips
Podium	1	1687.22	0.00

Summary - Total Story Shears

Level	Shear-X kips	Change-X kips	Shear-Y kips	Change-Y kips
Podium	1687.22	1687.22	0.00	0.00

Load Case: E3 Seismic - Drift EQ_ASCE716_Y_+E_Drft

Level	Diaph. #	Shear-X kips	Shear-Y kips
Podium	1	-0.00	1687.22

Summary - Total Story Shears

Level	Shear-X kips	Change-X kips	Shear-Y kips	Change-Y kips
Podium	-0.00	-0.00	1687.22	1687.22

Load Case: E4 Seismic - Drift EQ_ASCE716_Y_-E_Drft

Level	Diaph. #	Shear-X kips	Shear-Y kips
Podium	1	-0.00	1687.22

Summary - Total Story Shears

Level	Shear-X kips	Change-X kips	Shear-Y kips	Change-Y kips
Podium	-0.00	-0.00	1687.22	1687.22

Load Case: E5 Seismic - Force EQ_ASCE716_X_+E_F

Level	Diaph. #	Shear-X kips	Shear-Y kips
Podium	1	1687.22	0.00

Summary - Total Story Shears

Level	Shear-X kips	Change-X kips	Shear-Y kips	Change-Y kips
Podium	1687.22	1687.22	0.00	0.00

Load Case: E6 Seismic - Force EQ_ASCE716_X_-E_F

Level	Diaph. #	Shear-X kips	Shear-Y kips
Podium	1	1687.22	0.00

Summary - Total Story Shears

Level	Shear-X kips	Change-X kips	Shear-Y kips	Change-Y kips
Podium	1687.22	1687.22	0.00	0.00

Load Case: E7 Seismic - Force EQ_ASCE716_Y_+E_F

Level	Diaph. #	Shear-X kips	Shear-Y kips
Podium	1	-0.00	1687.22

Summary - Total Story Shears

Level	Shear-X kips	Change-X kips	Shear-Y kips	Change-Y kips
Podium	-0.00	-0.00	1687.22	1687.22

Load Case: E8 Seismic - Force EQ_ASCE716_Y_-E_F

Level	Diaph. #	Shear-X kips	Shear-Y kips
Podium	1	-0.00	1687.22

Summary - Total Story Shears

Level	Shear-X kips	Change-X kips	Shear-Y kips	Change-Y kips
Podium	-0.00	-0.00	1687.22	1687.22

Loads and Applied Forces

RAM Structural System
Bentley

RAM Frame 17.01.01.05
DataBase: ASD CMU - 12.08.2020 - Essex Project - 02.05.21 02/08/21 14:31:26

LOAD CASE: Seismic - Drift

Seismic ASCE 7-16 Equivalent Lateral Force
Importance Factor: 1.00 TL: 12.00 s
Site Class D: Stiff Soil, Default
Ss: 1.500 g S1: 0.600 g
Fa: 1.200 Fv: 1.700 SDs: 1.200 g SD1: 0.680 g
Risk Category: II Seismic Design Category: D
Provisions for: Drift
Ground Level: Base

Dir	Eccent	R	Ta Equation	Building Period-T
X	+ And -	5.0	Std,Ct=0.020,x=0.75	Calculated
Y	+ And -	5.0	Std,Ct=0.020,x=0.75	Calculated

Dir	Ta	Cu	T	T - used	Cs Eq12.8-2	Cs - used	k
X	0.137	1.400	0.128	0.128	0.240	0.240	1.000

Dir	Ta	Cu	T	T - used	Cs Eq12.8-2	Cs - used	k
Y	0.137	1.400	0.119	0.119	0.240	0.240	1.000

Exception 2 per Section 11.4.8 is applied for site class D with S1 > 0.2

Total Building Weight (kips) = 7030.10

APPLIED DIAPHRAGM FORCES

Type: EQ_ASCE716_X_+E_Drft

Level	Diaph.#	Ht	Fx	Fy	X	Y
		ft	kips	kips	ft	ft
Podium	1	13.00	1687.22	0.00	167.90	114.16

APPLIED STORY FORCES

Type: EQ_ASCE716_X_+E_Drft

Level	Ht	Fx	Fy
	ft	kips	kips
Podium	13.00	1687.22	0.00
		1687.22	0.00

APPLIED DIAPHRAGM FORCES

Type: EQ_ASCE716_X_-E_Drft

Level	Diaph.#	Ht	Fx	Fy	X	Y
		ft	kips	kips	ft	ft
Podium	1	13.00	1687.22	0.00	167.90	99.61

APPLIED STORY FORCES

Type: EQ_ASCE716_X_-E_Drft

Level	Ht	Fx	Fy
	ft	kips	kips
Podium	13.00	1687.22	0.00
		1687.22	0.00

APPLIED DIAPHRAGM FORCES

Type: EQ_ASCE716_Y_+E_Drft

Level	Diaph.#	Ht	Fx	Fy	X	Y
		ft	kips	kips	ft	ft
Podium	1	13.00	0.00	1687.22	178.77	106.89

APPLIED STORY FORCES

Type: EQ_ASCE716_Y_+E_Drft

Level	Ht	Fx	Fy
	ft	kips	kips
Podium	13.00	0.00	1687.22
		0.00	1687.22

APPLIED DIAPHRAGM FORCES

Type: EQ_ASCE716_Y_-E_Drft

Level	Diaph.#	Ht	Fx	Fy	X	Y
		ft	kips	kips	ft	ft
Podium	1	13.00	0.00	1687.22	157.03	106.89

APPLIED STORY FORCES

Type: EQ_ASCE716_Y_-E_Drft

Level	Ht	Fx	Fy
	ft	kips	kips
Podium	13.00	0.00	1687.22
		0.00	1687.22

LOAD CASE: Seismic - Force

Seismic ASCE 7-16 Equivalent Lateral Force
Importance Factor: 1.00 TL: 12.00 s
Site Class D: Stiff Soil, Default
Ss: 1.500 g S1: 0.600 g
Fa: 1.200 Fv: 1.700 SDs: 1.200 g SD1: 0.680 g
Risk Category: II Seismic Design Category: D
Provisions for: Force
Ground Level: Base

Dir	Eccent	R	Ta Equation	Building Period-T
X	+ And -	5.0	Std,Ct=0.020,x=0.75	Calculated
Y	+ And -	5.0	Std,Ct=0.020,x=0.75	Calculated

Dir	Ta	Cu	T	T - used	Cs Eq12.8-2	Cs - used	k
X	0.137	1.400	0.128	0.128	0.240	0.240	1.000

Dir	Ta	Cu	T	T - used	Cs Eq12.8-2	Cs - used	k
Y	0.137	1.400	0.119	0.119	0.240	0.240	1.000

Exception 2 per Section 11.4.8 is applied for site class D with S1 > 0.2

Total Building Weight (kips) = 7030.10

APPLIED DIAPHRAGM FORCES

Type: EQ_ASCE716_X_+E_F

Level	Diaph.#	Ht	Fx	Fy	X	Y
		ft	kips	kips	ft	ft
Podium	1	13.00	1687.22	0.00	167.90	114.16

APPLIED STORY FORCES

Type: EQ_ASCE716_X_+E_F

Level	Ht	Fx	Fy
	ft	kips	kips
Podium	13.00	1687.22	0.00
		1687.22	0.00

APPLIED DIAPHRAGM FORCES

Type: EQ_ASCE716_X_-E_F

Level	Diaph.#	Ht	Fx	Fy	X	Y
		ft	kips	kips	ft	ft
Podium	1	13.00	1687.22	0.00	167.90	99.61

APPLIED STORY FORCES

Type: EQ_ASCE716_X_-E_F

Level	Ht	Fx	Fy
	ft	kips	kips
Podium	13.00	1687.22	0.00
		1687.22	0.00

APPLIED DIAPHRAGM FORCES

Type: EQ_ASCE716_Y_+E_F

Level	Diaph.#	Ht	Fx	Fy	X	Y
		ft	kips	kips	ft	ft
Podium	1	13.00	0.00	1687.22	178.77	106.89

APPLIED STORY FORCES

Type: EQ_ASCE716_Y_+E_F

Level	Ht	Fx	Fy
	ft	kips	kips
Podium	13.00	0.00	1687.22
		0.00	1687.22

APPLIED DIAPHRAGM FORCES

Type: EQ_ASCE716_Y_-E_F

Level	Diaph.#	Ht	Fx	Fy	X	Y
		ft	kips	kips	ft	ft
Podium	1	13.00	0.00	1687.22	157.03	106.89

APPLIED STORY FORCES

Type: EQ_ASCE716_Y_-E_F

Level	Ht	Fx	Fy
	ft	kips	kips
Podium	13.00	0.00	1687.22
		0.00	1687.22

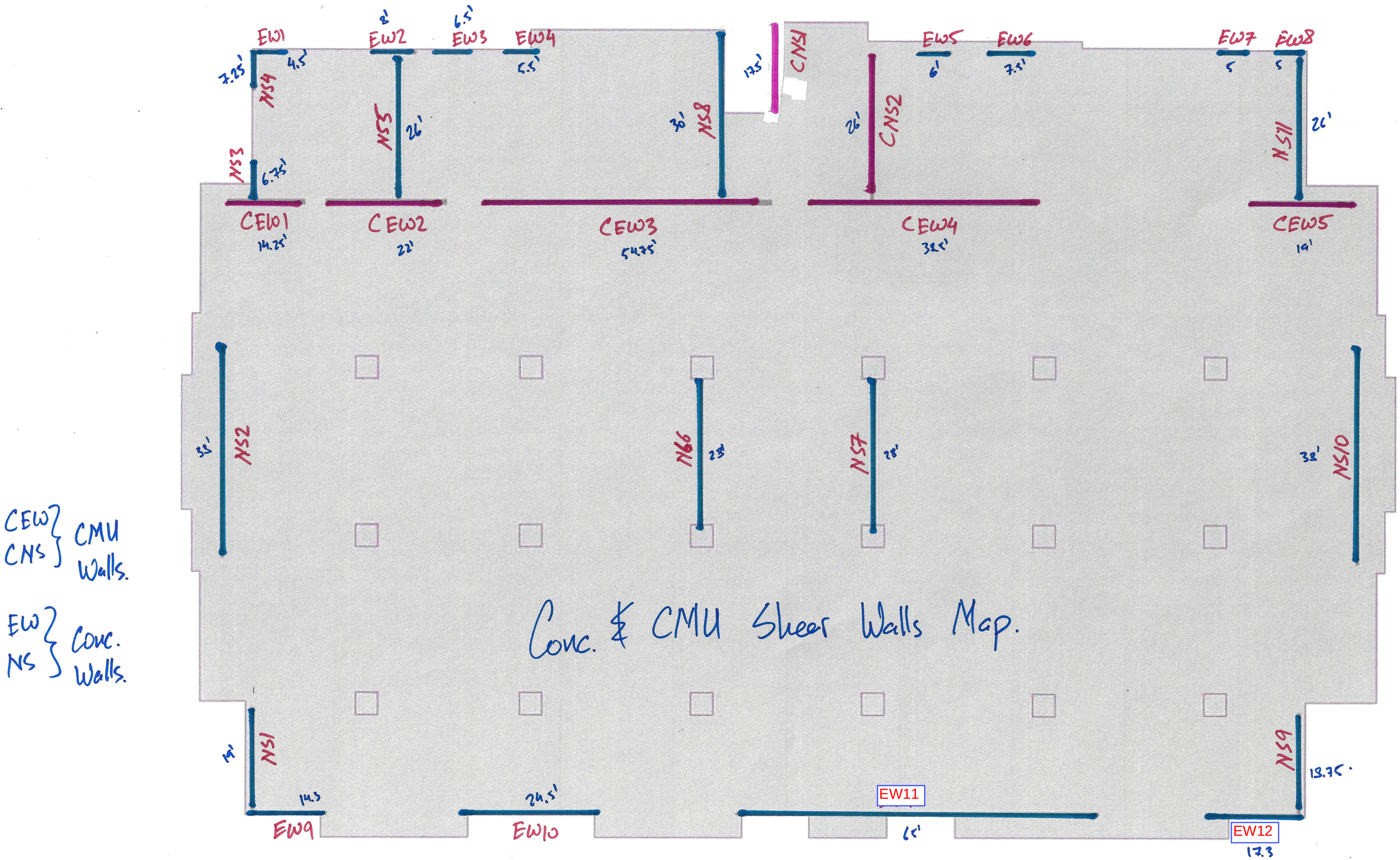
EW1
EW2
EW3
EW4
EW5
EW6
EW7
EW8
8'
6.5'
5.5'
6'
7.5'
5
5
7.25'
4.5'
NS4
NS3
6.75'
NS5
26'
NS8
30'
17.5'
CNS1
26'
CNS2
NS11
26'
CEW1
14.25'
CEW2
22'
CEW3
54.75'
CEW4
38.5'
CEW5
19'
35'
NS2
NS6
28'
NS7
28'
35'
NS10
CEW
CNS
CMU Walls.
EW
NS
Conc. Walls.
Conc. & CMU Shear Walls Map.
5'
NS1
14.3
24.5'
EW9
EW10
EW11
65'
NS9
13.75'
EW12
17.3

Load Combinations

RAM Structural System
Bentley

RAM Frame 17.01.01.05
DataBase: ASD CMU - 12.08.2020 - Essex Project - 02.05.21 02/08/21 11:22:03

LOAD CASE DEFINITIONS:

D	DeadLoad	RAMUSER
Lp	PosLiveLoad	RAMUSER
E5	Seismic - Force	EQ_ASCE716_X_+E_F
E6	Seismic - Force	EQ_ASCE716_X_-E_F
E7	Seismic - Force	EQ_ASCE716_Y_+E_F
E8	Seismic - Force	EQ_ASCE716_Y_-E_F

USER DEFINED LOAD COMBINATIONS:

1	*	D
2	*	D + Lp
3	*	1.168 D + 0.7 E5
4	*	1.168 D + 0.7 E6
5	*	1.168 D + 0.7 E7
6	*	1.168 D + 0.7 E8
7	*	1.168 D - 0.7 E5
8	*	1.168 D - 0.7 E6
9	*	1.168 D - 0.7 E7
10	*	1.168 D - 0.7 E8
11	*	1.126 D + 0.525 E5 + 0.75 Lp
12	*	1.126 D + 0.525 E6 + 0.75 Lp
13	*	1.126 D + 0.525 E7 + 0.75 Lp
14	*	1.126 D + 0.525 E8 + 0.75 Lp
15	*	1.126 D + 0.525 E5 - 0.75 Lp
16	*	1.126 D + 0.525 E6 - 0.75 Lp
17	*	1.126 D + 0.525 E7 - 0.75 Lp
18	*	1.126 D + 0.525 E8 - 0.75 Lp
19	*	0.432 D + 0.7 E5
20	*	0.432 D + 0.7 E6
21	*	0.432 D + 0.7 E7
22	*	0.432 D + 0.7 E8
23	*	0.432 D - 0.7 E5
24	*	0.432 D - 0.7 E6
25	*	0.432 D - 0.7 E7
26	*	0.432 D - 0.7 E8
27	*	0.6 D + 0.7 E5
28	*	0.6 D + 0.7 E6
29	*	0.6 D + 0.7 E7
30	*	0.6 D + 0.7 E8
31	*	0.6 D - 0.7 E5
32	*	0.6 D - 0.7 E6
33	*	0.6 D - 0.7 E7
34	*	0.6 D - 0.7 E8

* = Load combination currently selected to use

G12

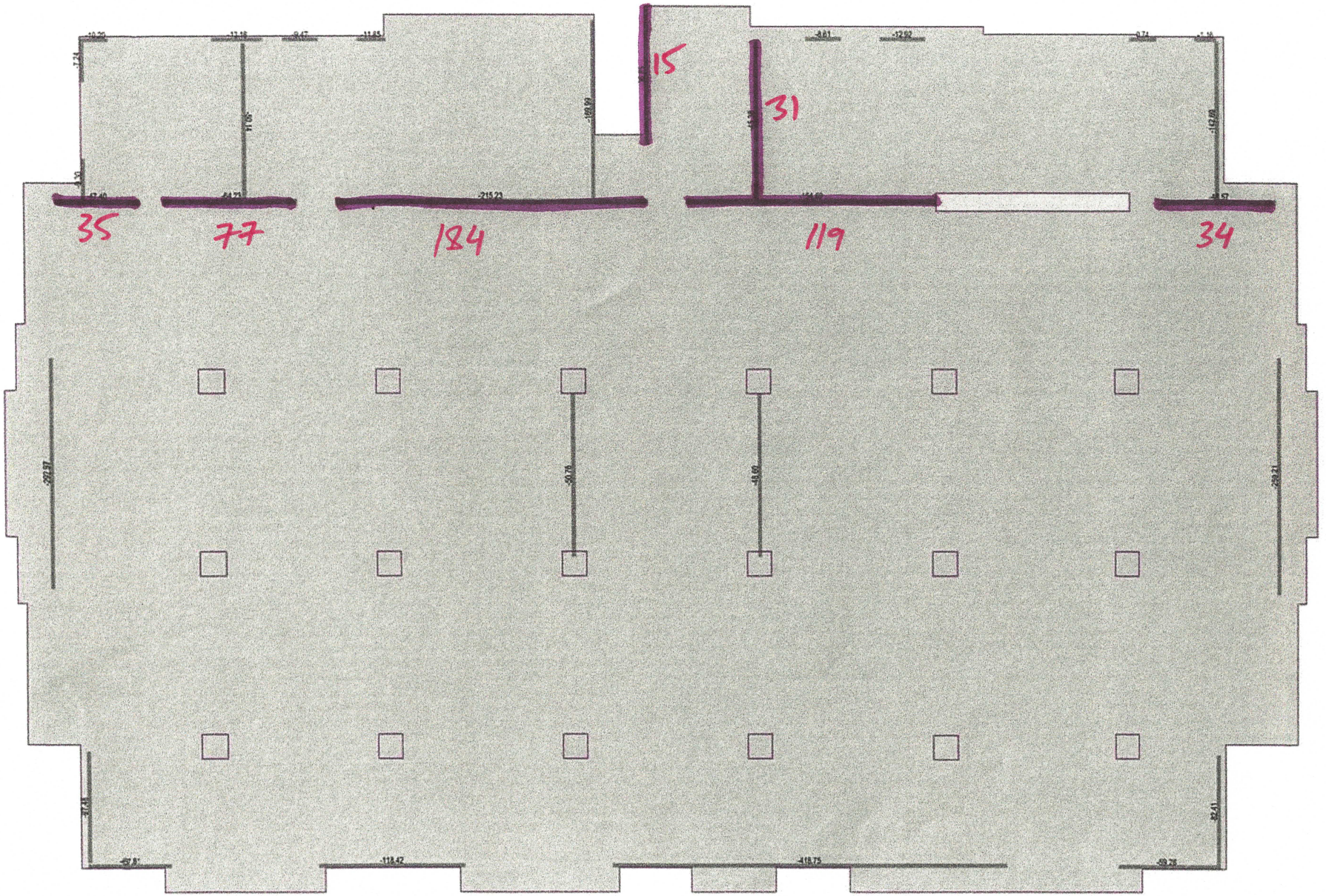

(ASD - Min. Axial Force)

G13

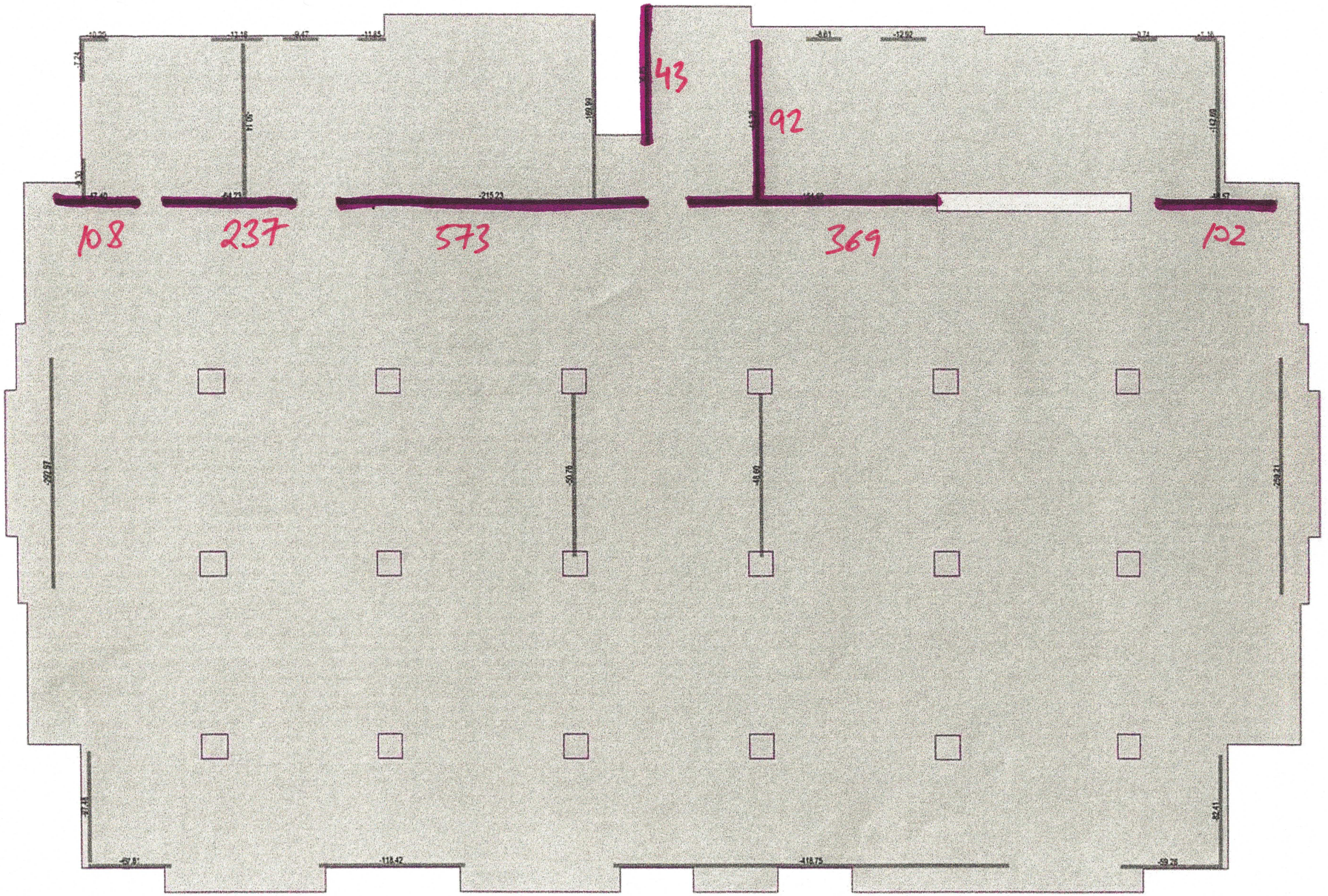

(ASD- Max. Axial Forces)

G14

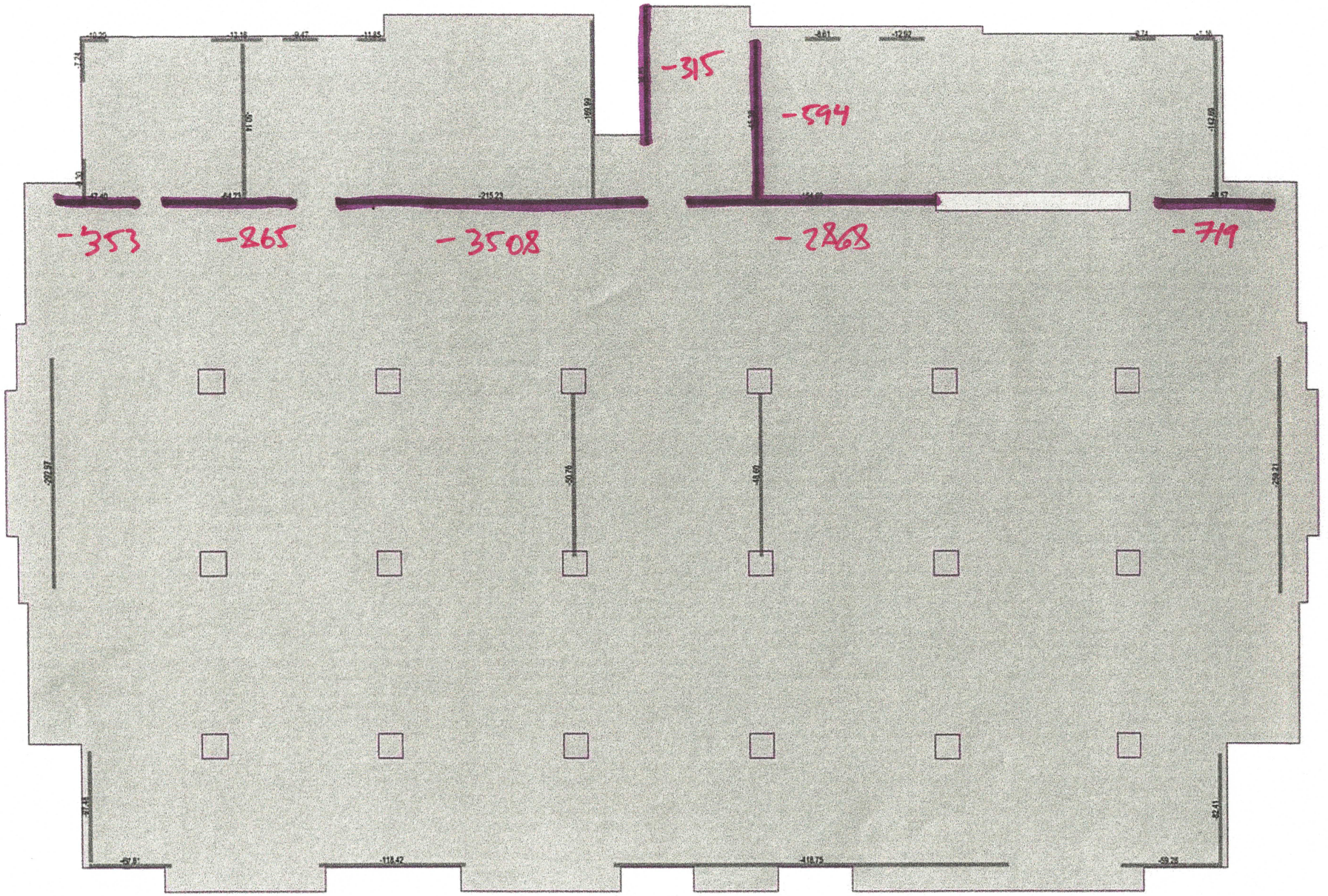

(ASD- Min. Moment)

G15

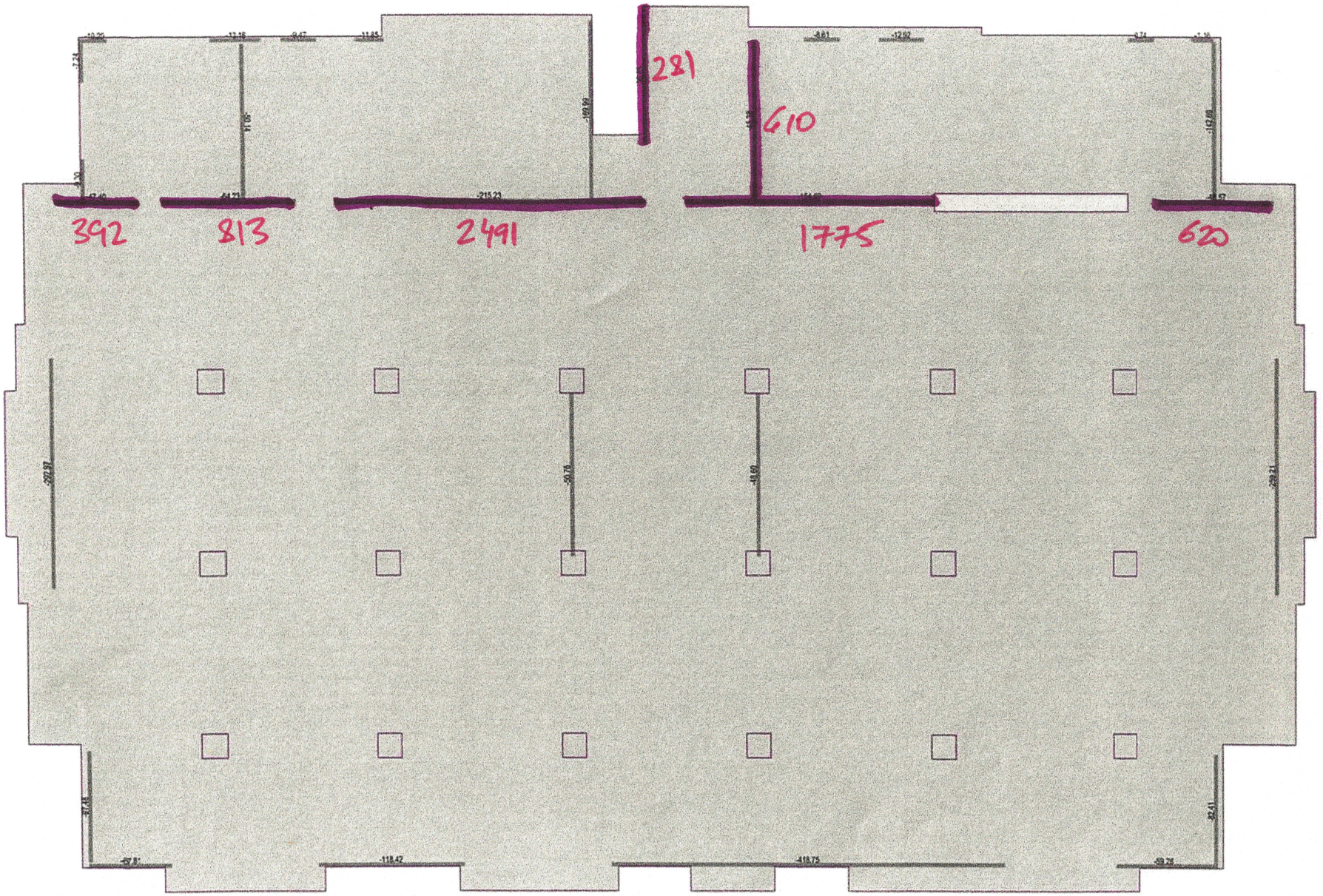

(ASD - Max. Moment)

G16

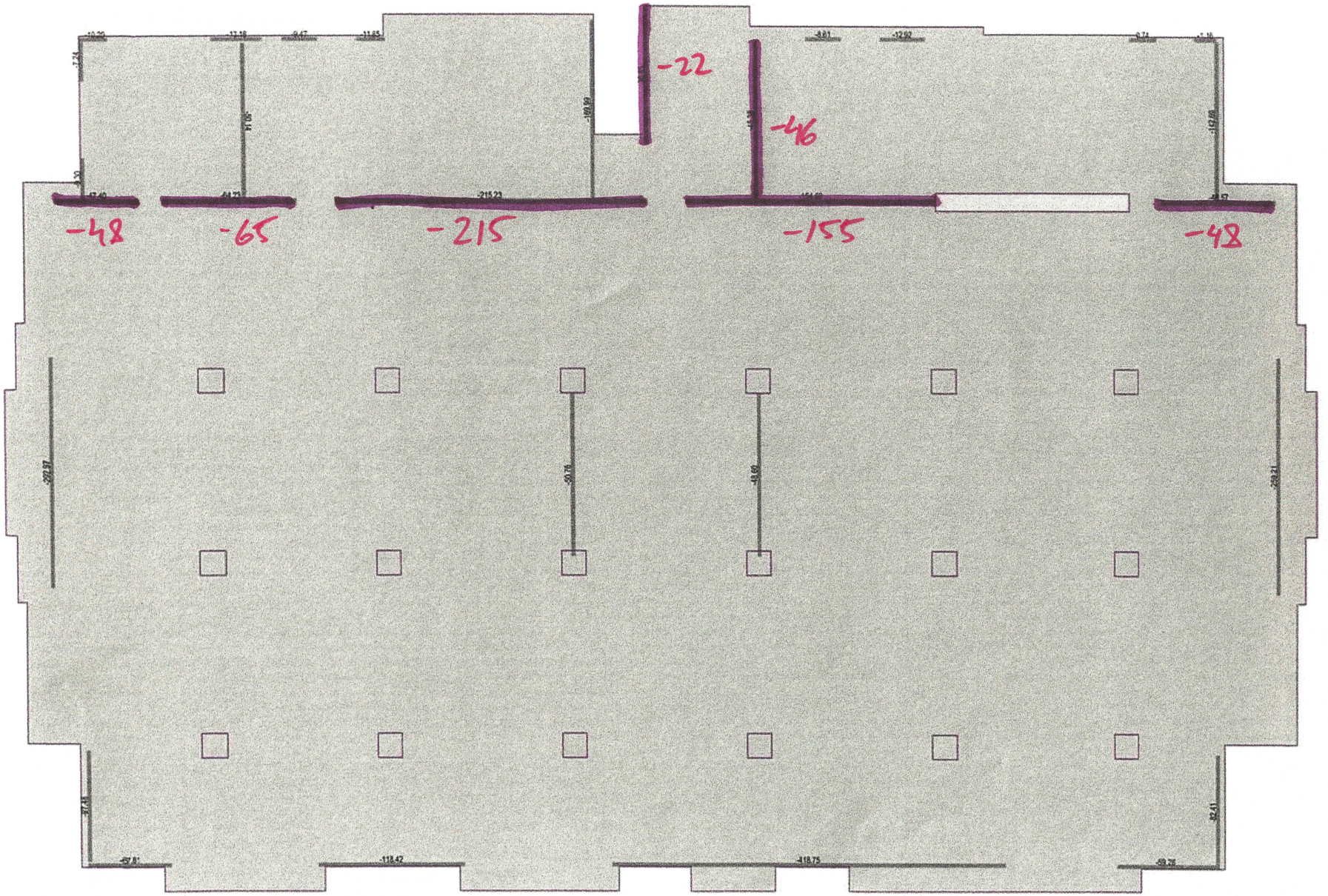

(ASD - Min. Sheer Forces)

G17

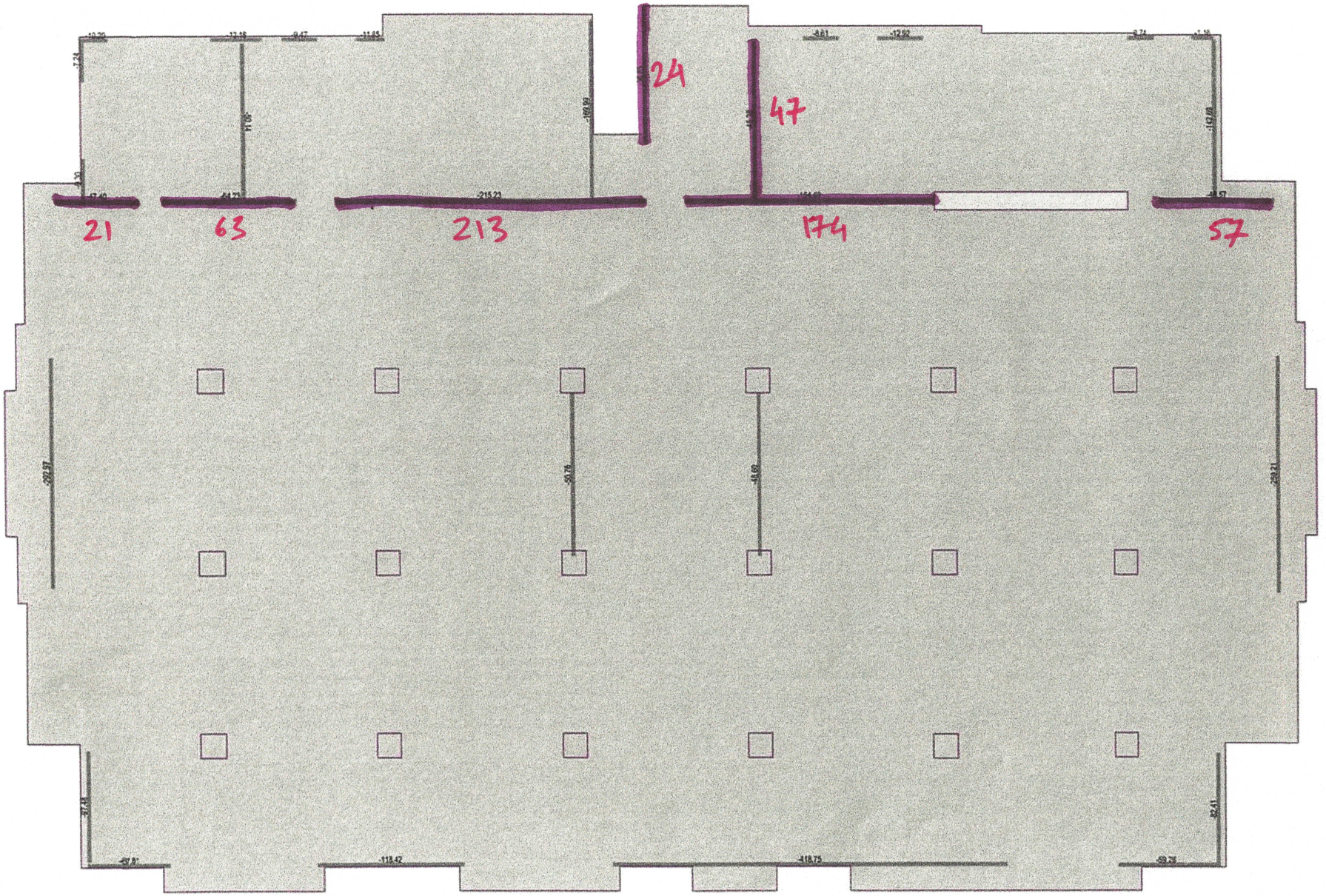

(ASD - Max. Shear Force)

THANG LE & ASSOCIATES TLA STRUCTURAL ENGINEERS

PROJECT :
CLIENT :
JOB NO. : DATE :

PAGE :
DESIGN BY :
REVIEW BY :

Masonry Shear Wall Design Based on TMS 402-16/13 & 2016 CBC (both ASD and SD) — CEW1

INPUT DATA & DESIGN SUMMARY

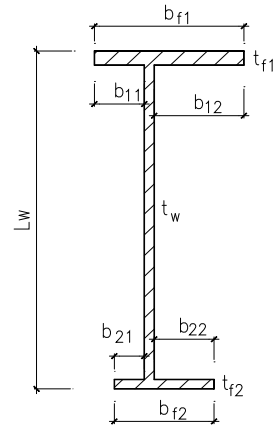

SPECIAL INSPECTION (0=NO, 1=YES)		1	Yes
(This option only for local jurisdiction amendments to the code, not part of TMS.)			
TYPE OF MASONRY (1=CMU, 2=BRICK)		1	CMU
MASONRY STRENGTH	f_m' =	1.5	ksi
REBAR YIELD STRESS	f_y =	60	ksi
ALLOWABLE 30% INCREASING ? (*Yes* or *No*, CBC 1605.3.2)		No	
SEISMIC PERFORMANCE CATEGORY (C,D,E, 0=WIND, 5=GRAVITY)		E	Seismic E
MASONRY LAID IN RUNNING BOND ? (TMS 402 7.3.2.6)		Yes	
SERVICE AXIAL LOAD	P =	108	kips, at middle of L_w
SERVICE SHEAR LOAD	V_x =	48	kips, (in-plane force)
SERVICE MOMENT LOAD	M_x =	392	ft-kips, (top flange, bf1, compression)
	M_y =	0	ft-kips, (out-of-plane, left b11 & b21, compression)
EFFECTIVE HEIGHT OF WALL	h_w =	13	ft
LENGTH OF SHEAR WALL	L_w =	14.25	ft, (within vertical control joints)

THE WALL DESIGN IS ADEQUATE.

THICKNESS OF WALL	t_w =	12	in						
REINFORCING OF WALL		1	#	6	at each ends, with	8	in center to edge.		
A_{sh}, Horizontal	1	#	6	@	16	in o.c.			
A_{sv}, Vertical	1	#	4	@	16	in o.c.			

TOP FLANGE (COMPRESSION)		b_{11} =	0	in ,	b_{12} =	0	in ,	b_{f1} =	12	in ,(TMS 402 5.1.1.2.3)
t_{f1} =	0	in ,	0	#	5	@	16	in o.c., Vertical		
BOTTOM FLANGE		b_{21} =	0	in ,	b_{22} =	0	in ,	b_{f2} =	12	in ,(TMS 402 5.1.1.2.3)
t_{f2} =	0	in ,	0	#	5	@	16	in o.c., Vertical		

ANALYSIS

CHECK FLEXURAL & AXIAL CAPACITY BY ALLOWABLE STRESS DESIGN (ASD)

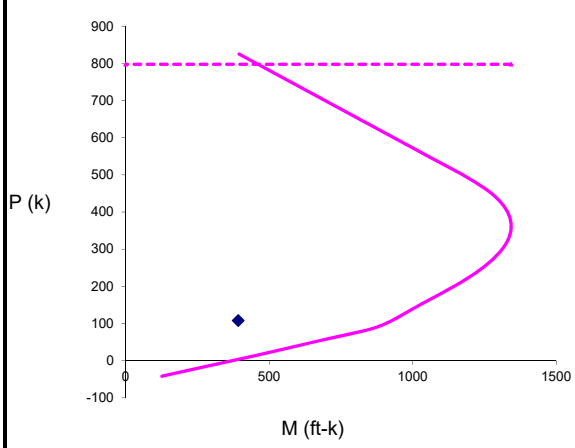

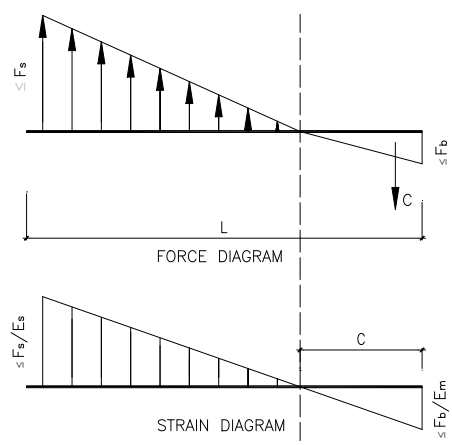

P (load) =	108	kips	<	P (allowable) = P_a =	797.461	kips	
M (resultant) = $(M_x^2 + M_y^2)^{0.5}$ =	392	ft-kips	<	M (allowable) =	920.712	ft-kips	[Satisfactory]
Where E_m =	1350	ksi, (TMS 402 4.2.2.2.1)		A_n =	2000	in^2	
E_s =	29000	ksi, (TMS 402 4.2.2.1)		A_{st} =	2.62	in^2	
Scale Factor =	1.000	, (TMS 402-11 2.1.2)		$f_s \geq$	0	ksi, (TMS 402 8.3.3.3)	
F_b =	0.495	ksi, (TMS 402 8-18)		h / r =	13	, neglected conservatively flanges.	
F_s =	32.00	ksi, (TMS 402 8.3.3.1)		P_a =	797.461	kips, (TMS 402 8.3.4.2.1)	

(cont'd)

CHECK FLEXURAL & AXIAL CAPACITY BY STRENGTH DESIGN (SD)

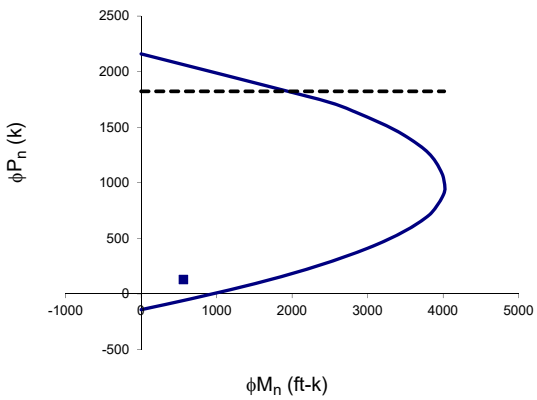

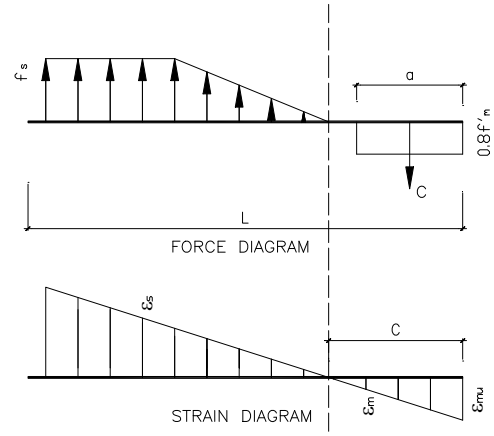

P_u = 1.2 P =	129.6	kips	<	ϕP_n =	1822.85	kips, (TMS 402 9.3.4.1.1)	
$M_u = (1/0.7)\,(M_x^2 + M_y^2)^{0.5}$ =	560	ft-kips	<	ϕM_n =	1706.01	ft-kips, at P_u level.	
			[Satisfactory]				
Where ε_{mu} =	0.0025	, (TMS 402 9.3.2.c)		d =	171	in	
ϕ =	0.9	, (TMS 402 9.1.4.1)		f_m' =	1.5	ksi	

CHECK SHEAR CAPACITY (ASD), (TMS 402 8.3.6)

$$F_v = MAX\left\{(SF)\left[\frac{1}{4}\left(4-1.75MIN\left(1\ ,\ \frac{M_T}{Vd}\right)\right)\sqrt{f'_m}+0.25\frac{P}{A_n}\right]+0.5\frac{A_v F_s d}{A_n s}\ ,\ (SF)\left[\frac{1}{2}\left(4-1.75MIN\left(1\ ,\ \frac{M_T}{Vd}\right)\right)\sqrt{f'_m}+0.25\frac{P}{A_n}\right]\right\}$$

= 80 psi > 1.5 f_v = 36 psi [Satisfactory]

(factor 1.5 from TMS 402 7.3.2.6.1.2)

$$F_{v,\,Maximum} = (SF)\,MIN\left[3\ ,\ MAX\left(2\ ,\ 2+\frac{4}{3}\left(1-\frac{M_T}{Vd}\right)\right)\right]\sqrt{f'_m} =$$ 100 psi > 1.5 f_v

[Satisfactory]

CHECK MINIMUM REINFORCEMENTS

$A_{sh,min}$ =	0.098	in^2/ft	<	$A_{sh,actual}$ =	0.330	in^2/ft	[Satisfactory]	(TMS 402 7.3.2.6)
$S_{sh,max}$ =	48	in	>	$S_{sh,actual}$ =	16	in	[Satisfactory]	(TMS 402 7.3.2.6)
$A_{sv,min}$ =	0.098	in^2/ft	<	$A_{sv,actual}$ =	0.150	in^2/ft	[Satisfactory]	(TMS 402 7.3.2.6)
$S_{sv,max}$ =	48	in	>	$S_{sv,actual}$ =	16	in	[Satisfactory]	(TMS 402 7.3.2.6)
$A_{total,min}$ =	0.279	in^2/ft	<	$A_{total,actual}$ =	0.480	in^2/ft	[Satisfactory]	(TMS 402 7.3.2.6)

CHECK MAXIMUM REINFORCEMENT PERCENTAGE

$$\rho_{max} = \frac{n f'_m}{2 f_y\left(n+\frac{f_y}{f'_m}\right)} =$$ 0.0044 > ρ = 0.0002 [Satisfactory]

(TMS 402 8.3.4.4)

THANG LE & ASSOCIATES TLA STRUCTURAL ENGINEERS

PROJECT :
CLIENT :
JOB NO. : DATE :

PAGE :
DESIGN BY :
REVIEW BY :

Masonry Shear Wall Design Based on TMS 402-16/13 & 2016 CBC (both ASD and SD) — CEW2

INPUT DATA & DESIGN SUMMARY

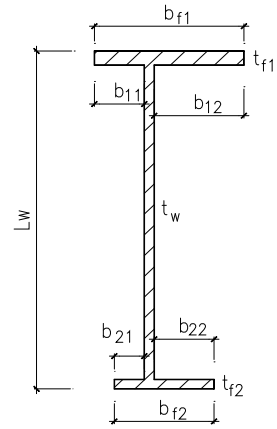

SPECIAL INSPECTION (0=NO, 1=YES)		1	Yes
(This option only for local jurisdiction amendments to the code, not part of TMS.)			
TYPE OF MASONRY (1=CMU, 2=BRICK)		1	CMU
MASONRY STRENGTH	f_m' =	1.5	ksi
REBAR YIELD STRESS	f_y =	60	ksi
ALLOWABLE 30% INCREASING ? (*Yes* or *No*, CBC 1605.3.2)		No	
SEISMIC PERFORMANCE CATEGORY (C,D,E, 0=WIND, 5=GRAVITY)		E	Seismic E
MASONRY LAID IN RUNNING BOND ? (TMS 402 7.3.2.6)		Yes	
SERVICE AXIAL LOAD	P =	237	kips, at middle of L_w
SERVICE SHEAR LOAD	V_x =	65	kips, (in-plane force)
SERVICE MOMENT LOAD	M_x =	865	ft-kips, (top flange, bf1, compression)
	M_y =	0	ft-kips, (out-of-plane, left b11 & b21, compression)
EFFECTIVE HEIGHT OF WALL	h_w =	13	ft
LENGTH OF SHEAR WALL	L_w =	22	ft, (within vertical control joints)

THE WALL DESIGN IS ADEQUATE.

THICKNESS OF WALL	t_w =	12	in						
REINFORCING OF WALL		1	#	6	at each ends, with	8	in center to edge.		
A_{sh}, Horizontal	1	#	6	@	16	in o.c.			
A_{sv}, Vertical	1	#	4	@	16	in o.c.			

TOP FLANGE (COMPRESSION)		b_{11} =	0	in ,	b_{12} =	0	in ,	b_{f1} =	12	in ,(TMS 402 5.1.1.2.3)
t_{f1} =	0	in ,	0	#	5	@	16	in o.c., Vertical		
BOTTOM FLANGE		b_{21} =	0	in ,	b_{22} =	0	in ,	b_{f2} =	12	in ,(TMS 402 5.1.1.2.3)
t_{f2} =	0	in ,	0	#	5	@	16	in o.c., Vertical		

ANALYSIS

CHECK FLEXURAL & AXIAL CAPACITY BY ALLOWABLE STRESS DESIGN (ASD)

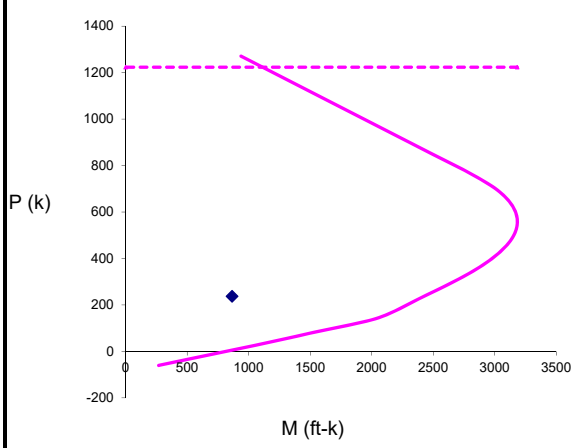

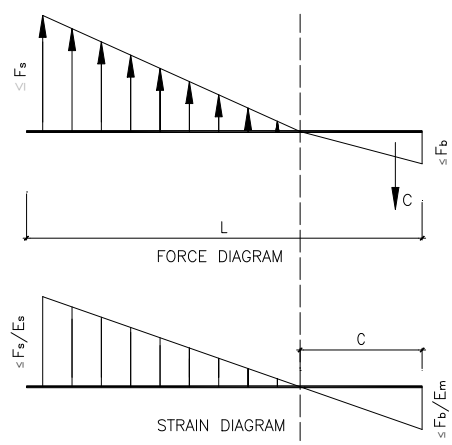

P (load) =	237	kips	<	P (allowable) = P_a =	1223.36	kips	
M (resultant) = $(M_x^2 + M_y^2)^{0.5}$ =	865	ft-kips	<	M (allowable) =	2423.98	ft-kips	[Satisfactory]
Where E_m =	1350	ksi, (TMS 402 4.2.2.2.1)		A_n =	3081	in^2	
E_s =	29000	ksi, (TMS 402 4.2.2.1)		A_{st} =	3.78	in^2	
Scale Factor =	1.000	, (TMS 402-11 2.1.2)		f_s ≥	0	ksi, (TMS 402 8.3.3.3)	
F_b =	0.495	ksi, (TMS 402 8-18)		h / r =	13	, neglected conservatively flanges.	
F_s =	32.00	ksi, (TMS 402 8.3.3.1)		P_a =	1223.36	kips, (TMS 402 8.3.4.2.1)	

(cont'd)

CHECK FLEXURAL & AXIAL CAPACITY BY STRENGTH DESIGN (SD)

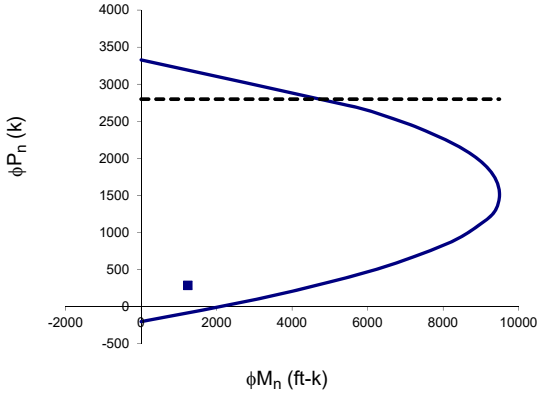

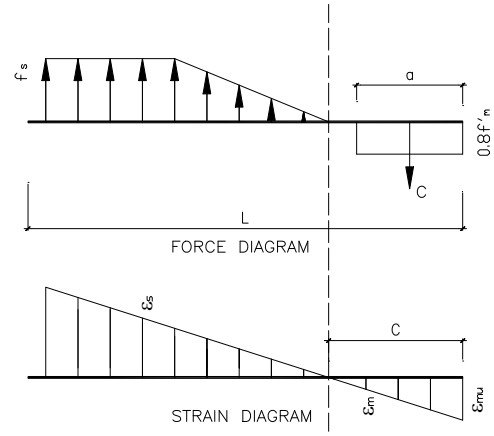

P_u = 1.2 P =	284.4	kips	<	ϕP_n =	2797.68	kips, (TMS 402 9.3.4.1.1)	
$M_u = (1/0.7)\,(M_x^2 + M_y^2)^{0.5}$ =	1235.71	ft-kips	<	ϕM_n =	4604.55	ft-kips, at P_u level.	
			[Satisfactory]				
Where ε_{mu} =	0.0025	, (TMS 402 9.3.2.c)	d =	264	in		
ϕ =	0.9	, (TMS 402 9.1.4.1)	f_m' =	1.5	ksi		

CHECK SHEAR CAPACITY (ASD), (TMS 402 8.3.6)

$$F_v = MAX\left\{(SF)\left[\frac{1}{4}\left(4-1.75MIN\left(1\ ,\ \frac{M_T}{Vd}\right)\right)\sqrt{f'_m}+0.25\frac{P}{A_n}\right]+0.5\frac{A_v F_s d}{A_n s}\ ,\ (SF)\left[\frac{1}{2}\left(4-1.75MIN\left(1\ ,\ \frac{M_T}{Vd}\right)\right)\sqrt{f'_m}+0.25\frac{P}{A_n}\right]\right\}$$

= 85 psi > 1.5 f_v = 32 psi [Satisfactory]

(factor 1.5 from TMS 402 7.3.2.6.1.2)

$$F_{v,\,Maximum} = (SF)\,MIN\left[3\ ,\ MAX\left(2\ ,\ 2+\frac{4}{3}\left(1-\frac{M_T}{Vd}\right)\right)\right]\sqrt{f'_m} =$$ 98 psi > 1.5 f_v

[Satisfactory]

CHECK MINIMUM REINFORCEMENTS

$A_{sh,min}$ =	0.098	in^2/ft	<	$A_{sh,actual}$ =	0.330	in^2/ft	[Satisfactory]	(TMS 402 7.3.2.6)
$S_{sh,max}$ =	48	in	>	$S_{sh,actual}$ =	16	in	[Satisfactory]	(TMS 402 7.3.2.6)
$A_{sv,min}$ =	0.098	in^2/ft	<	$A_{sv,actual}$ =	0.150	in^2/ft	[Satisfactory]	(TMS 402 7.3.2.6)
$S_{sv,max}$ =	48	in	>	$S_{sv,actual}$ =	16	in	[Satisfactory]	(TMS 402 7.3.2.6)
$A_{total,min}$ =	0.279	in^2/ft	<	$A_{total,actual}$ =	0.480	in^2/ft	[Satisfactory]	(TMS 402 7.3.2.6)

CHECK MAXIMUM REINFORCEMENT PERCENTAGE

$$\rho_{max} = \frac{n f'_m}{2 f_y\left(n+\frac{f_y}{f'_m}\right)} =$$ 0.0044 > ρ = 0.0001 [Satisfactory]

(TMS 402 8.3.4.4)

THANG LE & ASSOCIATES TLA STRUCTURAL ENGINEERS

PROJECT :
CLIENT :
JOB NO. : DATE :

PAGE :
DESIGN BY :
REVIEW BY :

Masonry Shear Wall Design Based on TMS 402-16/13 & 2016 CBC (both ASD and SD) — CEW3

INPUT DATA & DESIGN SUMMARY

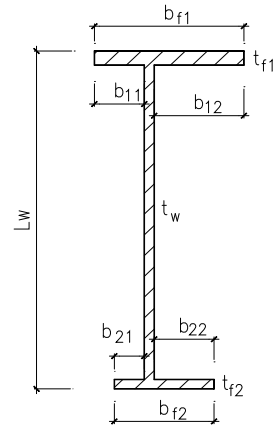

SPECIAL INSPECTION (0=NO, 1=YES)		1	Yes
(This option only for local jurisdiction amendments to the code, not part of TMS.)			
TYPE OF MASONRY (1=CMU, 2=BRICK)		1	CMU
MASONRY STRENGTH	f_m' =	1.5	ksi
REBAR YIELD STRESS	f_y =	60	ksi
ALLOWABLE 30% INCREASING ? (*Yes* or *No*, CBC 1605.3.2)		No	
SEISMIC PERFORMANCE CATEGORY (C,D,E, 0=WIND, 5=GRAVITY)		E	Seismic E
MASONRY LAID IN RUNNING BOND ? (TMS 402 7.3.2.6)		Yes	
SERVICE AXIAL LOAD	P =	573	kips, at middle of L_w
SERVICE SHEAR LOAD	V_x =	215	kips, (in-plane force)
SERVICE MOMENT LOAD	M_x =	3508	ft-kips, (top flange, bf1, compression)
	M_y =	0	ft-kips, (out-of-plane, left b11 & b21, compression)
EFFECTIVE HEIGHT OF WALL	h_w =	13	ft
LENGTH OF SHEAR WALL	L_w =	54.75	ft, (within vertical control joints)

THE WALL DESIGN IS ADEQUATE.

THICKNESS OF WALL	t_w =	12	in						
REINFORCING OF WALL		1	#	6	at each ends, with	8	in center to edge.		
A_{sh}, Horizontal	1	#	6	@	16	in o.c.			
A_{sv}, Vertical	1	#	4	@	16	in o.c.			

TOP FLANGE (COMPRESSION)		b_{11} =	0	in ,	b_{12} =	0	in ,	b_{f1} =	12	in ,(TMS 402 5.1.1.2.3)
t_{f1} =	0	in ,	0	#	5	@	16	in o.c., Vertical		
BOTTOM FLANGE		b_{21} =	0	in ,	b_{22} =	0	in ,	b_{f2} =	12	in ,(TMS 402 5.1.1.2.3)
t_{f2} =	0	in ,	0	#	5	@	16	in o.c., Vertical		

ANALYSIS

CHECK FLEXURAL & AXIAL CAPACITY BY ALLOWABLE STRESS DESIGN (ASD)

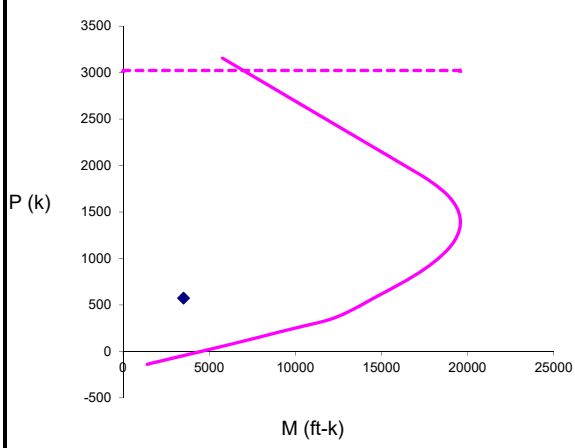

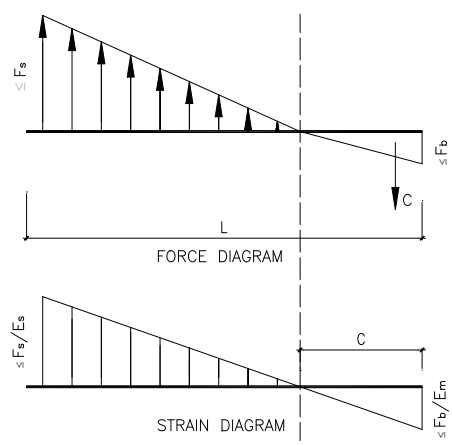

P (load) =	573	kips	<	P (allowable) = P_a =	3023.12	kips	
M (resultant) = $(M_x^2 + M_y^2)^{0.5}$ =	3508	ft-kips	<	M (allowable) =	14537	ft-kips	[Satisfactory]
Where E_m =	1350	ksi, (TMS 402 4.2.2.2.1)		A_n =	7650	in^2	
E_s =	29000	ksi, (TMS 402 4.2.2.1)		A_{st} =	8.69	in^2	
Scale Factor =	1.000	, (TMS 402-11 2.1.2)		f_s ≥	0	ksi, (TMS 402 8.3.3.3)	
F_b =	0.495	ksi, (TMS 402 8-18)		h / r =	13	, neglected conservatively flanges.	
F_s =	32.00	ksi, (TMS 402 8.3.3.1)		P_a =	3023.12	kips, (TMS 402 8.3.4.2.1)	

(cont'd)

CHECK FLEXURAL & AXIAL CAPACITY BY STRENGTH DESIGN (SD)

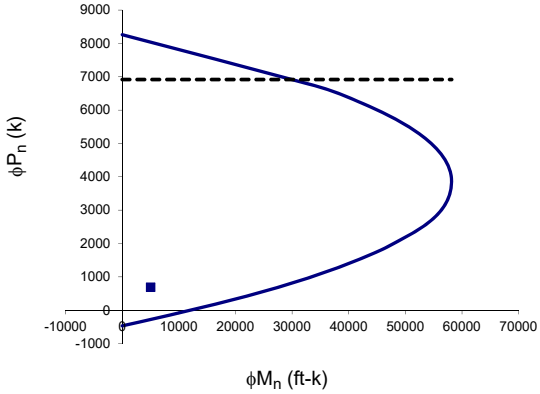

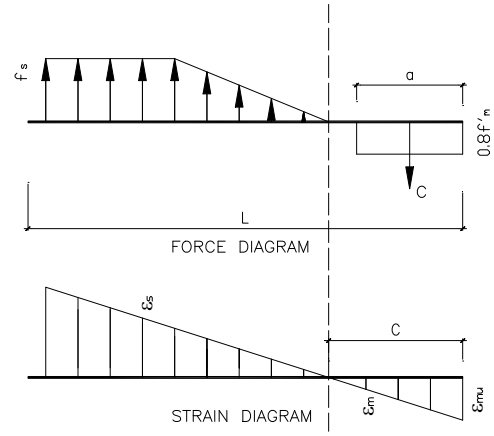

P_u = 1.2 P =	687.6	kips	<	ϕP_n =	6917.12	kips, (TMS 402 9.3.4.1.1)	
$M_u = (1/0.7)\,(M_x^2 + M_y^2)^{0.5}$ =	5011.43	ft-kips	<	ϕM_n =	27412.2	ft-kips, at P_u level.	
			[Satisfactory]				

Where	ε_{mu} =	0.0025	, (TMS 402 9.3.2.c)	d =	657 in
	ϕ =	0.9	, (TMS 402 9.1.4.1)	f_m' =	1.5 ksi

CHECK SHEAR CAPACITY (ASD), (TMS 402 8.3.6)

$$F_v = MAX\left\{(SF)\left[\frac{1}{4}\left(4-1.75MIN\left(1\ ,\ \frac{M_T}{Vd}\right)\right)\sqrt{f'_m}+0.25\frac{P}{A_n}\right]+0.5\frac{A_v F_s d}{A_n s}\ ,\ (SF)\left[\frac{1}{2}\left(4-1.75MIN\left(1\ ,\ \frac{M_T}{Vd}\right)\right)\sqrt{f'_m}+0.25\frac{P}{A_n}\right]\right\}$$

= 90 psi > 1.5 f_v = 42 psi [Satisfactory]

(factor 1.5 from TMS 402 7.3.2.6.1.2)

$$F_{v,\,Maximum} = (SF)\,MIN\left[3\ ,\ MAX\left(2\ ,\ 2+\frac{4}{3}\left(1-\frac{M_T}{Vd}\right)\right)\right]\sqrt{f'_m} =$$ 114 psi > 1.5 f_v

[Satisfactory]

CHECK MINIMUM REINFORCEMENTS

$A_{sh,min}$ =	0.098	in^2/ft	<	$A_{sh,actual}$ =	0.330	in^2/ft	[Satisfactory]	(TMS 402 7.3.2.6)
$S_{sh,max}$ =	48	in	>	$S_{sh,actual}$ =	16	in	[Satisfactory]	(TMS 402 7.3.2.6)
$A_{sv,min}$ =	0.098	in^2/ft	<	$A_{sv,actual}$ =	0.150	in^2/ft	[Satisfactory]	(TMS 402 7.3.2.6)
$S_{sv,max}$ =	48	in	>	$S_{sv,actual}$ =	16	in	[Satisfactory]	(TMS 402 7.3.2.6)
$A_{total,min}$ =	0.279	in^2/ft	<	$A_{total,actual}$ =	0.480	in^2/ft	[Satisfactory]	(TMS 402 7.3.2.6)

CHECK MAXIMUM REINFORCEMENT PERCENTAGE

$$\rho_{max} = \frac{n f'_m}{2 f_y\left(n+\frac{f_y}{f'_m}\right)} =$$ 0.0044 > ρ = 0.0001 [Satisfactory]

(TMS 402 8.3.4.4)

THANG LE & ASSOCIATES TLA STRUCTURAL ENGINEERS

PROJECT :
CLIENT :
JOB NO. : DATE :

PAGE :
DESIGN BY :
REVIEW BY :

Masonry Shear Wall Design Based on TMS 402-16/13 & 2016 CBC (both ASD and SD) — CEW4

INPUT DATA & DESIGN SUMMARY

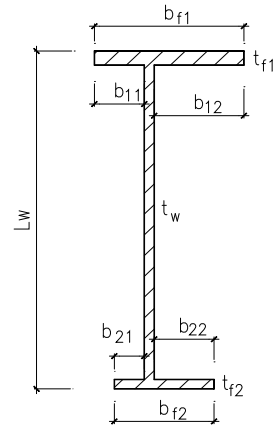

SPECIAL INSPECTION (0=NO, 1=YES)		1	Yes
(This option only for local jurisdiction amendments to the code, not part of TMS.)			
TYPE OF MASONRY (1=CMU, 2=BRICK)		1	CMU
MASONRY STRENGTH	f_m' =	1.5	ksi
REBAR YIELD STRESS	f_y =	60	ksi
ALLOWABLE 30% INCREASING ? (*Yes* or *No*, CBC 1605.3.2)		No	
SEISMIC PERFORMANCE CATEGORY (C,D,E, 0=WIND, 5=GRAVITY)		E	Seismic E
MASONRY LAID IN RUNNING BOND ? (TMS 402 7.3.2.6)		Yes	
SERVICE AXIAL LOAD	P =	369	kips, at middle of L_w
SERVICE SHEAR LOAD	V_x =	174	kips, (in-plane force)
SERVICE MOMENT LOAD	M_x =	2868	ft-kips, (top flange, bf1, compression)
	M_y =	0	ft-kips, (out-of-plane, left b11 & b21, compression)
EFFECTIVE HEIGHT OF WALL	h_w =	13	ft
LENGTH OF SHEAR WALL	L_w =	38.5	ft, (within vertical control joints)

THE WALL DESIGN IS ADEQUATE.

THICKNESS OF WALL	t_w =	12	in					
REINFORCING OF WALL		1	#	6	at each ends, with	8	in center to edge.	
A_{sh}, Horizontal	1	#	6	@	16	in o.c.		
A_{sv}, Vertical	1	#	4	@	16	in o.c.		

TOP FLANGE (COMPRESSION)		b_{11} =	0	in ,	b_{12} =	0	in ,	b_{f1} =	12	in ,(TMS 402 5.1.1.2.3)
t_{f1} =	0	in ,	0	#	5	@	16	in o.c., Vertical		
BOTTOM FLANGE		b_{21} =	0	in ,	b_{22} =	0	in ,	b_{f2} =	12	in ,(TMS 402 5.1.1.2.3)
t_{f2} =	0	in ,	0	#	5	@	16	in o.c., Vertical		

ANALYSIS

CHECK FLEXURAL & AXIAL CAPACITY BY ALLOWABLE STRESS DESIGN (ASD)

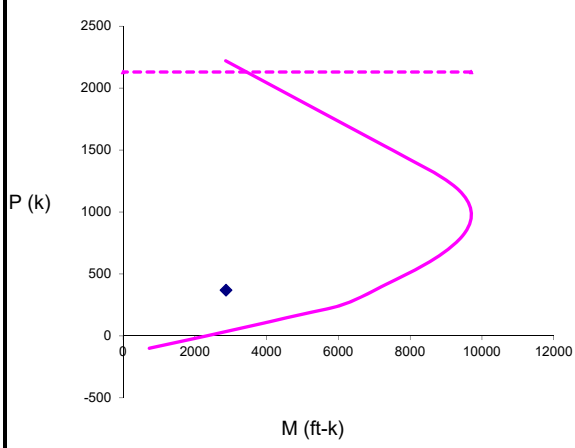

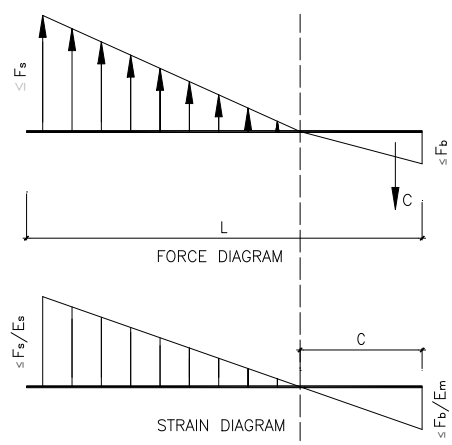

P (load) =	369	kips	<	P (allowable) = P_a =	2130.11	kips	
M (resultant) = $(M_x^2 + M_y^2)^{0.5}$ =	2868	ft-kips	<	M (allowable) =	6986.83	ft-kips	[Satisfactory]
Where E_m =	1350	ksi, (TMS 402 4.2.2.2.1)		A_n =	5383	in^2	
E_s =	29000	ksi, (TMS 402 4.2.2.1)		A_{st} =	6.26	in^2	
Scale Factor =	1.000	, (TMS 402-11 2.1.2)		f_s ≥	0	ksi, (TMS 402 8.3.3.3)	
F_b =	0.495	ksi, (TMS 402 8-18)		h / r =	13	, neglected conservatively flanges.	
F_s =	32.00	ksi, (TMS 402 8.3.3.1)		P_a =	2130.11	kips, (TMS 402 8.3.4.2.1)	

(cont'd)

CHECK FLEXURAL & AXIAL CAPACITY BY STRENGTH DESIGN (SD)

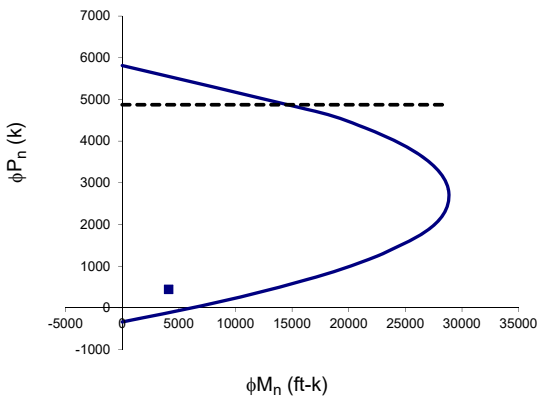

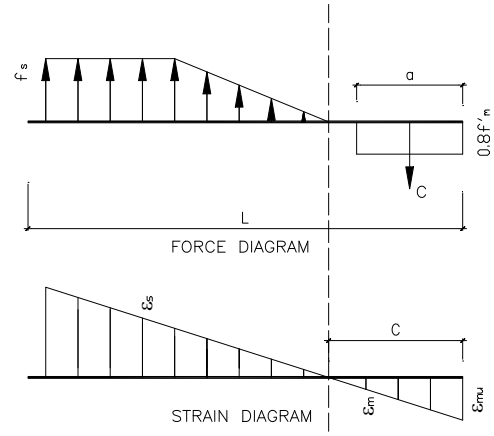

P_u = 1.2 P =	442.8	kips	<	ϕP_n =	4873.12	kips, (TMS 402 9.3.4.1.1)	
$M_u = (1/0.7)\,(M_x^2 + M_y^2)^{0.5}$ =	4097.14	ft-kips	<	ϕM_n =	13026.4	ft-kips, at P_u level.	
			[Satisfactory]				
Where ε_{mu} =	0.0025	, (TMS 402 9.3.2.c)	d =	462	in		
ϕ =	0.9	, (TMS 402 9.1.4.1)	f_m' =	1.5	ksi		

CHECK SHEAR CAPACITY (ASD), (TMS 402 8.3.6)

$$F_v = MAX\left\{(SF)\left[\frac{1}{4}\left(4-1.75MIN\left(1\ ,\ \frac{M_T}{Vd}\right)\right)\sqrt{f'_m}+0.25\frac{P}{A_n}\right]+0.5\frac{A_v F_s d}{A_n s}\ ,\ (SF)\left[\frac{1}{2}\left(4-1.75MIN\left(1\ ,\ \frac{M_T}{Vd}\right)\right)\sqrt{f'_m}+0.25\frac{P}{A_n}\right]\right\}$$

= 86 psi > 1.5 f_v = 49 psi [Satisfactory]

(factor 1.5 from TMS 402 7.3.2.6.1.2)

$$F_{v,\,Maximum} = (SF)\,MIN\left[3\ ,\ MAX\left(2\ ,\ 2+\frac{4}{3}\left(1-\frac{M_T}{Vd}\right)\right)\right]\sqrt{f'_m} =$$ 107 psi > 1.5 f_v

[Satisfactory]

CHECK MINIMUM REINFORCEMENTS

$A_{sh,min}$ =	0.098	in^2/ft	<	$A_{sh,actual}$ =	0.330	in^2/ft	[Satisfactory]	(TMS 402 7.3.2.6)
$S_{sh,max}$ =	48	in	>	$S_{sh,actual}$ =	16	in	[Satisfactory]	(TMS 402 7.3.2.6)
$A_{sv,min}$ =	0.098	in^2/ft	<	$A_{sv,actual}$ =	0.150	in^2/ft	[Satisfactory]	(TMS 402 7.3.2.6)
$S_{sv,max}$ =	48	in	>	$S_{sv,actual}$ =	16	in	[Satisfactory]	(TMS 402 7.3.2.6)
$A_{total,min}$ =	0.279	in^2/ft	<	$A_{total,actual}$ =	0.480	in^2/ft	[Satisfactory]	(TMS 402 7.3.2.6)

CHECK MAXIMUM REINFORCEMENT PERCENTAGE

$$\rho_{max} = \frac{n f'_m}{2 f_y\left(n+\frac{f_y}{f'_m}\right)} =$$ 0.0044 > ρ = 0.0001 [Satisfactory]

(TMS 402 8.3.4.4)

THANG LE & ASSOCIATES TLA STRUCTURAL ENGINEERS

PROJECT :
CLIENT :
JOB NO. : DATE :

PAGE :
DESIGN BY :
REVIEW BY :

Masonry Shear Wall Design Based on TMS 402-16/13 & 2016 CBC (both ASD and SD) — CEW5

INPUT DATA & DESIGN SUMMARY

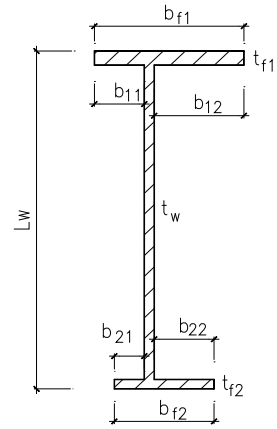

SPECIAL INSPECTION (0=NO, 1=YES)		1	Yes
(This option only for local jurisdiction amendments to the code, not part of TMS.)			
TYPE OF MASONRY (1=CMU, 2=BRICK)		1	CMU
MASONRY STRENGTH	f_m' =	1.5	ksi
REBAR YIELD STRESS	f_y =	60	ksi
ALLOWABLE 30% INCREASING ? (*Yes* or *No*, CBC 1605.3.2)		No	
SEISMIC PERFORMANCE CATEGORY (C,D,E, 0=WIND, 5=GRAVITY)		E	Seismic E
MASONRY LAID IN RUNNING BOND ? (TMS 402 7.3.2.6)		Yes	
SERVICE AXIAL LOAD	P =	102	kips, at middle of L_w
SERVICE SHEAR LOAD	V_x =	57	kips, (in-plane force)
SERVICE MOMENT LOAD	M_x =	719	ft-kips, (top flange, bf1, compression)
	M_y =	0	ft-kips, (out-of-plane, left b11 & b21, compression)
EFFECTIVE HEIGHT OF WALL	h_w =	13	ft
LENGTH OF SHEAR WALL	L_w =	19	ft, (within vertical control joints)

THE WALL DESIGN IS ADEQUATE.

THICKNESS OF WALL	t_w =	12	in					
REINFORCING OF WALL		1	#	6	at each ends, with	8	in center to edge.	
A_{sh}, Horizontal	1	#	6	@	16	in o.c.		
A_{sv}, Vertical	1	#	4	@	16	in o.c.		

TOP FLANGE (COMPRESSION)		b_{11} =	0	in ,	b_{12} =	0	in ,	b_{f1} =	12	in ,(TMS 402 5.1.1.2.3)
t_{f1} =	0	in ,	0	#	5	@	16	in o.c., Vertical		
BOTTOM FLANGE		b_{21} =	0	in ,	b_{22} =	0	in ,	b_{f2} =	12	in ,(TMS 402 5.1.1.2.3)
t_{f2} =	0	in ,	0	#	5	@	16	in o.c., Vertical		

ANALYSIS

CHECK FLEXURAL & AXIAL CAPACITY BY ALLOWABLE STRESS DESIGN (ASD)

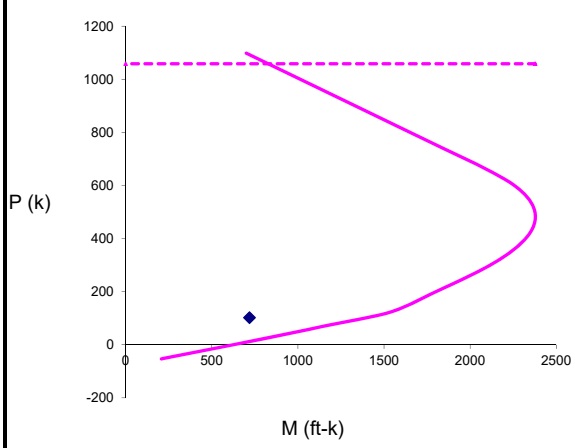

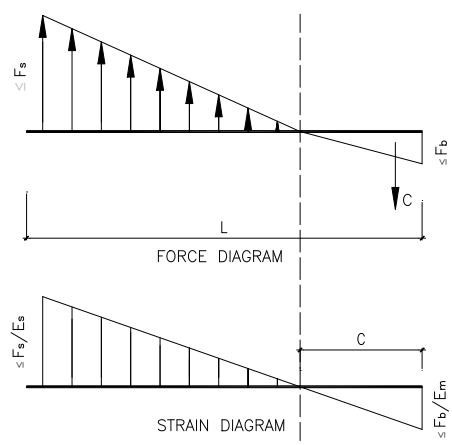

P (load) =	102	kips	<	P (allowable) = P_a =	1058.5	kips	
M (resultant) = $(M_x^2 + M_y^2)^{0.5}$ =	719	ft-kips	<	M (allowable) =	1383.07	ft-kips	[Satisfactory]
Where E_m =	1350	ksi, (TMS 402 4.2.2.2.1)		A_n =	2663	in^2	
E_s =	29000	ksi, (TMS 402 4.2.2.1)		A_{st} =	3.33	in^2	
Scale Factor =	1.000	, (TMS 402-11 2.1.2)		f_s ≥	0	ksi, (TMS 402 8.3.3.3)	
F_b =	0.495	ksi, (TMS 402 8-18)		h / r =	13	, neglected conservatively flanges.	
F_s =	32.00	ksi, (TMS 402 8.3.3.1)		P_a =	1058.5	kips, (TMS 402 8.3.4.2.1)	

(cont'd)

CHECK FLEXURAL & AXIAL CAPACITY BY STRENGTH DESIGN (SD)

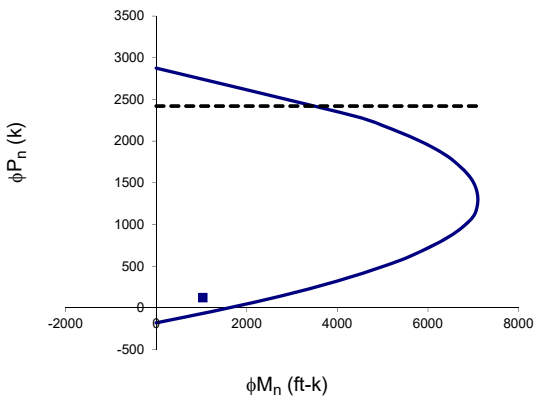

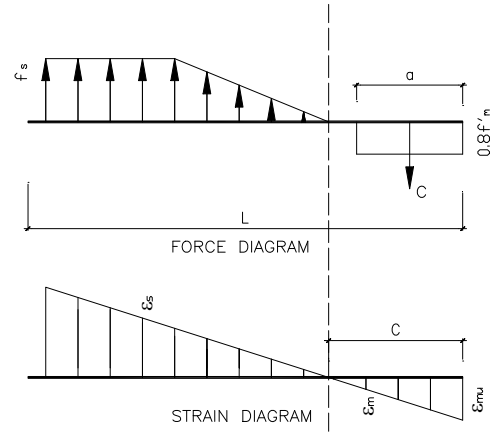

P_u = 1.2 P =	122.4	kips	<	ϕP_n =	2420.33	kips, (TMS 402 9.3.4.1.1)	
$M_u = (1/0.7)\,(M_x^2 + M_y^2)^{0.5}$ =	1027.14	ft-kips	<	ϕM_n =	2572.1	ft-kips, at P_u level.	
			[Satisfactory]				

Where ε_{mu} = 0.0025 , (TMS 402 9.3.2.c) d = 228 in

ϕ = 0.9 , (TMS 402 9.1.4.1) f_m' = 1.5 ksi

CHECK SHEAR CAPACITY (ASD), (TMS 402 8.3.6)

$$F_v = MAX\left\{(SF)\left[\frac{1}{4}\left(4-1.75MIN\left(1\ ,\ \frac{M_T}{Vd}\right)\right)\sqrt{f'_m}+0.25\frac{P}{A_n}\right]+0.5\frac{A_v F_s d}{A_n s}\ ,\ (SF)\left[\frac{1}{2}\left(4-1.75MIN\left(1\ ,\ \frac{M_T}{Vd}\right)\right)\sqrt{f'_m}+0.25\frac{P}{A_n}\right]\right\}$$

= 75 psi > 1.5 f_v = 32 psi [Satisfactory]

(factor 1.5 from TMS 402 7.3.2.6.1.2)

$$F_{v,\,Maximum} = (SF)\,MIN\left[3\ ,\ MAX\left(2\ ,\ 2+\frac{4}{3}\left(1-\frac{M_T}{Vd}\right)\right)\right]\sqrt{f'_m} = 95 \text{ psi} > 1.5\ f_v$$

[Satisfactory]

CHECK MINIMUM REINFORCEMENTS

$A_{sh,min}$ =	0.098	in^2/ft	<	$A_{sh,actual}$ =	0.330	in^2/ft	[Satisfactory]	(TMS 402 7.3.2.6)
$S_{sh,max}$ =	48	in	>	$S_{sh,actual}$ =	16	in	[Satisfactory]	(TMS 402 7.3.2.6)
$A_{sv,min}$ =	0.098	in^2/ft	<	$A_{sv,actual}$ =	0.150	in^2/ft	[Satisfactory]	(TMS 402 7.3.2.6)
$S_{sv,max}$ =	48	in	>	$S_{sv,actual}$ =	16	in	[Satisfactory]	(TMS 402 7.3.2.6)
$A_{total,min}$ =	0.279	in^2/ft	<	$A_{total,actual}$ =	0.480	in^2/ft	[Satisfactory]	(TMS 402 7.3.2.6)

CHECK MAXIMUM REINFORCEMENT PERCENTAGE

$$\rho_{max} = \frac{n\,f'_m}{2\,f_y\left(n+\frac{f_y}{f'_m}\right)} = 0.0044 > \rho = 0.0002 \quad \text{[Satisfactory]}$$

(TMS 402 8.3.4.4)

THANG LE & ASSOCIATES TLA STRUCTURAL ENGINEERS

PROJECT :
CLIENT :
JOB NO. : DATE :

PAGE :
DESIGN BY :
REVIEW BY :

Masonry Shear Wall Design Based on TMS 402-16/13 & 2016 CBC (both ASD and SD) — CNS1

INPUT DATA & DESIGN SUMMARY

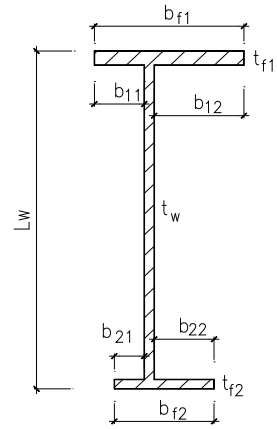

SPECIAL INSPECTION (0=NO, 1=YES)		1	Yes
(This option only for local jurisdiction amendments to the code, not part of TMS.)			
TYPE OF MASONRY (1=CMU, 2=BRICK)		1	CMU
MASONRY STRENGTH	f_m' =	1.5	ksi
REBAR YIELD STRESS	f_y =	60	ksi
ALLOWABLE 30% INCREASING ? (*Yes* or *No*, CBC 1605.3.2)		No	
SEISMIC PERFORMANCE CATEGORY (C,D,E, 0=WIND, 5=GRAVITY)		E	Seismic E
MASONRY LAID IN RUNNING BOND ? (TMS 402 7.3.2.6)		Yes	
SERVICE AXIAL LOAD	P =	43	kips, at middle of L_w
SERVICE SHEAR LOAD	V_x =	24	kips, (in-plane force)
SERVICE MOMENT LOAD	M_x =	315	ft-kips, (top flange, bf1, compression)
	M_y =	0	ft-kips, (out-of-plane, left b11 & b21, compression)
EFFECTIVE HEIGHT OF WALL	h_w =	13	ft
LENGTH OF SHEAR WALL	L_w =	17.5	ft, (within vertical control joints)

THE WALL DESIGN IS ADEQUATE.

THICKNESS OF WALL	t_w =	8	in					
REINFORCING OF WALL		1	#	6	at each ends, with	8	in center to edge.	
A_{sh}, Horizontal	1	#	5	@	16	in o.c.		
A_{sv}, Vertical	1	#	4	@	16	in o.c.		

TOP FLANGE (COMPRESSION)		b_{11} =	0	in ,	b_{12} =	0	in ,	b_{f1} =	8	in ,(TMS 402 5.1.1.2.3)
t_{f1} =	0	in ,	0	#	5	@	16	in o.c., Vertical		
BOTTOM FLANGE		b_{21} =	0	in ,	b_{22} =	0	in ,	b_{f2} =	8	in ,(TMS 402 5.1.1.2.3)
t_{f2} =	0	in ,	0	#	5	@	16	in o.c., Vertical		

ANALYSIS

CHECK FLEXURAL & AXIAL CAPACITY BY ALLOWABLE STRESS DESIGN (ASD)

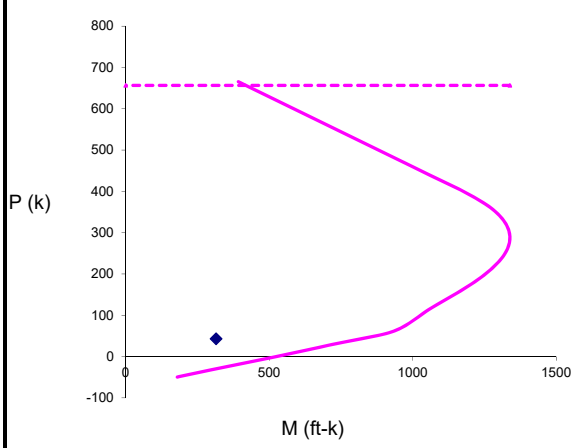

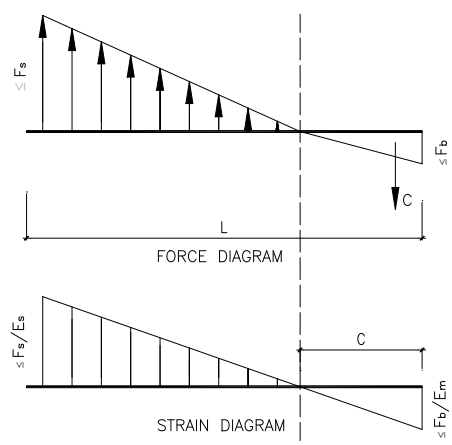

P (load) =	43	kips	<	P (allowable) = P_a =	656.563	kips	
M (resultant) = $(M_x^2 + M_y^2)^{0.5}$ =	315	ft-kips	<	M (allowable) =	810.945	ft-kips	[Satisfactory]
Where E_m =	1350	ksi, (TMS 402 4.2.2.2.1)		A_n =	1613	in^2	
E_s =	29000	ksi, (TMS 402 4.2.2.1)		A_{st} =	3.11	in^2	
Scale Factor =	1.000	, (TMS 402-11 2.1.2)		$f_s \geq$	0	ksi, (TMS 402 8.3.3.3)	
F_b =	0.495	ksi, (TMS 402 8-18)		h / r =	20	, neglected conservatively flanges.	
F_s =	32.00	ksi, (TMS 402 8.3.3.1)		P_a =	656.563	kips, (TMS 402 8.3.4.2.1)	

(cont'd)

CHECK FLEXURAL & AXIAL CAPACITY BY STRENGTH DESIGN (SD)

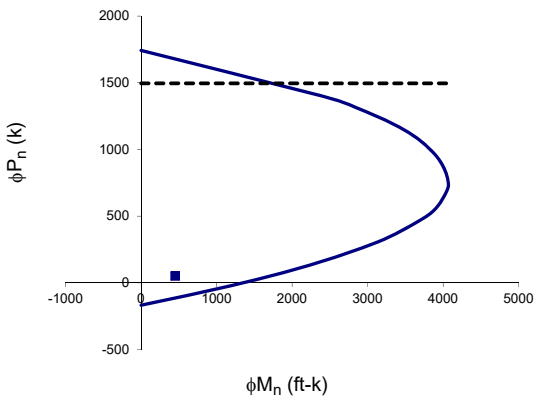

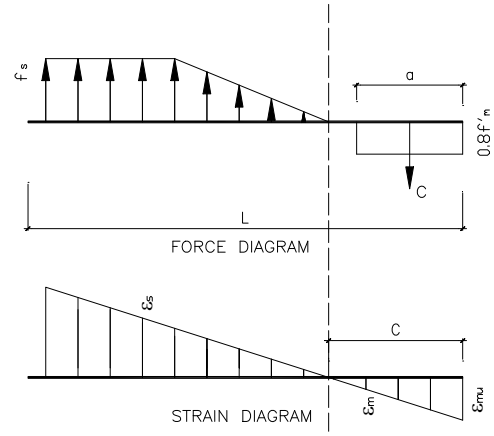

P_u = 1.2 P =	51.6	kips	<	ϕP_n =	1495.71	kips, (TMS 402 9.3.4.1.1)	
$M_u = (1/0.7)\,(M_x^2 + M_y^2)^{0.5}$ =	450	ft-kips	<	ϕM_n =	1699.11	ft-kips, at P_u level.	
			[Satisfactory]				
Where ε_{mu} =	0.0025	, (TMS 402 9.3.2.c)		d =	210	in	
ϕ =	0.9	, (TMS 402 9.1.4.1)		f_m' =	1.5	ksi	

CHECK SHEAR CAPACITY (ASD), (TMS 402 8.3.6)

$$F_v = MAX\left\{(SF)\left[\frac{1}{4}\left(4-1.75MIN\left(1\ ,\ \frac{M_T}{Vd}\right)\right)\sqrt{f'_m}+0.25\frac{P}{A_n}\right]+0.5\frac{A_v F_s d}{A_n s}\ ,\ (SF)\left[\frac{1}{2}\left(4-1.75MIN\left(1\ ,\ \frac{M_T}{Vd}\right)\right)\sqrt{f'_m}+0.25\frac{P}{A_n}\right]\right\}$$

= 73 psi > 1.5 f_v = 22 psi [Satisfactory]

(factor 1.5 from TMS 402 7.3.2.6.1.2)

$$F_{v,\,Maximum} = (SF)\,MIN\left[3\ ,\ MAX\left(2\ ,\ 2+\frac{4}{3}\left(1-\frac{M_T}{Vd}\right)\right)\right]\sqrt{f'_m} = 90 \text{ psi} > 1.5\ f_v$$

[Satisfactory]

CHECK MINIMUM REINFORCEMENTS

$A_{sh,min}$ =	0.064	in^2/ft	<	$A_{sh,actual}$ =	0.233	in^2/ft	[Satisfactory]	(TMS 402 7.3.2.6)
$S_{sh,max}$ =	48	in	>	$S_{sh,actual}$ =	16	in	[Satisfactory]	(TMS 402 7.3.2.6)
$A_{sv,min}$ =	0.064	in^2/ft	<	$A_{sv,actual}$ =	0.150	in^2/ft	[Satisfactory]	(TMS 402 7.3.2.6)
$S_{sv,max}$ =	48	in	>	$S_{sv,actual}$ =	16	in	[Satisfactory]	(TMS 402 7.3.2.6)
$A_{total,min}$ =	0.183	in^2/ft	<	$A_{total,actual}$ =	0.383	in^2/ft	[Satisfactory]	(TMS 402 7.3.2.6)

CHECK MAXIMUM REINFORCEMENT PERCENTAGE

$$\rho_{max} = \frac{n\,f'_m}{2\,f_y\left(n+\frac{f_y}{f'_m}\right)} = 0.0044 > \rho = 0.0003 \quad \text{[Satisfactory]}$$

(TMS 402 8.3.4.4)

THANG LE & ASSOCIATES TLA STRUCTURAL ENGINEERS

PROJECT :
CLIENT :
JOB NO. : DATE :

PAGE :
DESIGN BY :
REVIEW BY :

Masonry Shear Wall Design Based on TMS 402-16/13 & 2016 CBC (both ASD and SD) — CNS2

INPUT DATA & DESIGN SUMMARY

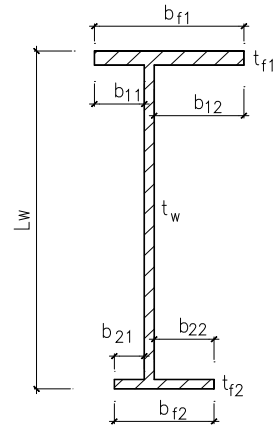

SPECIAL INSPECTION (0=NO, 1=YES)		1	Yes
(This option only for local jurisdiction amendments to the code, not part of TMS.)			
TYPE OF MASONRY (1=CMU, 2=BRICK)		1	CMU
MASONRY STRENGTH	f_m' =	1.5	ksi
REBAR YIELD STRESS	f_y =	60	ksi
ALLOWABLE 30% INCREASING ? (*Yes* or *No*, CBC 1605.3.2)		No	
SEISMIC PERFORMANCE CATEGORY (C,D,E, 0=WIND, 5=GRAVITY)		E	Seismic E
MASONRY LAID IN RUNNING BOND ? (TMS 402 7.3.2.6)		Yes	
SERVICE AXIAL LOAD	P =	92	kips, at middle of L_w
SERVICE SHEAR LOAD	V_x =	47	kips, (in-plane force)
SERVICE MOMENT LOAD	M_x =	610	ft-kips, (top flange, bf1, compression)
	M_y =	0	ft-kips, (out-of-plane, left b11 & b21, compression)
EFFECTIVE HEIGHT OF WALL	h_w =	13	ft
LENGTH OF SHEAR WALL	L_w =	26	ft, (within vertical control joints)

THE WALL DESIGN IS ADEQUATE.

THICKNESS OF WALL	t_w =	8	in					
REINFORCING OF WALL		1	#	6	at each ends, with	8	in center to edge.	
A_{sh}, Horizontal	1	#	5	@	16	in o.c.		
A_{sv}, Vertical	1	#	4	@	16	in o.c.		

TOP FLANGE (COMPRESSION)		b_{11} =	0	in ,	b_{12} =	0	in ,	b_{f1} =	8	in ,(TMS 402 5.1.1.2.3)
t_{f1} =	0	in ,	0	#	5	@	16	in o.c., Vertical		
BOTTOM FLANGE		b_{21} =	0	in ,	b_{22} =	0	in ,	b_{f2} =	8	in ,(TMS 402 5.1.1.2.3)
t_{f2} =	0	in ,	0	#	5	@	16	in o.c., Vertical		

ANALYSIS

CHECK FLEXURAL & AXIAL CAPACITY BY ALLOWABLE STRESS DESIGN (ASD)

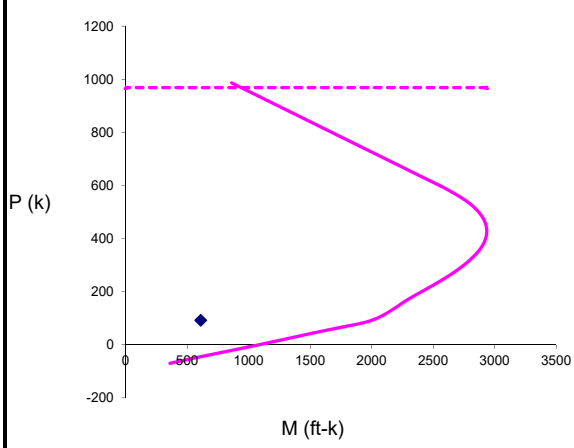

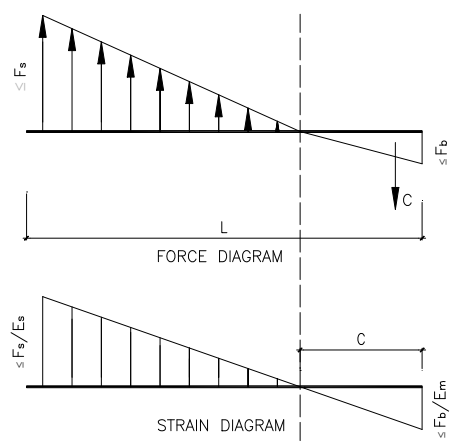

P (load) =	92	kips	<	P (allowable) = P_a =	968.567	kips	
M (resultant) = $(M_x^2 + M_y^2)^{0.5}$ =	610	ft-kips	<	M (allowable) =	1987.56	ft-kips	[Satisfactory]
Where E_m =	1350	ksi, (TMS 402 4.2.2.2.1)		A_n =	2391	in^2	
E_s =	29000	ksi, (TMS 402 4.2.2.1)		A_{st} =	4.38	in^2	
Scale Factor =	1.000	, (TMS 402-11 2.1.2)		$f_s \geq$	0	ksi, (TMS 402 8.3.3.3)	
F_b =	0.495	ksi, (TMS 402 8-18)		h / r =	20	, neglected conservatively flanges.	
F_s =	32.00	ksi, (TMS 402 8.3.3.1)		P_a =	968.567	kips, (TMS 402 8.3.4.2.1)	

(cont'd)

CHECK FLEXURAL & AXIAL CAPACITY BY STRENGTH DESIGN (SD)

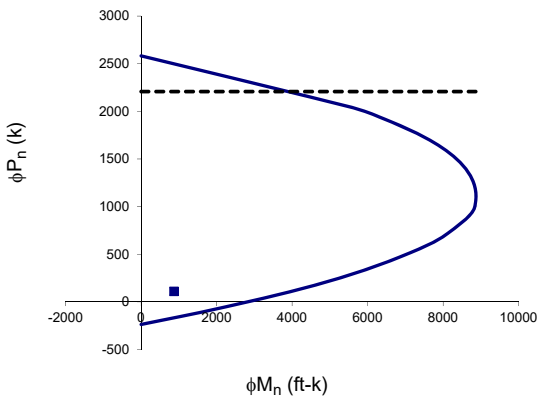

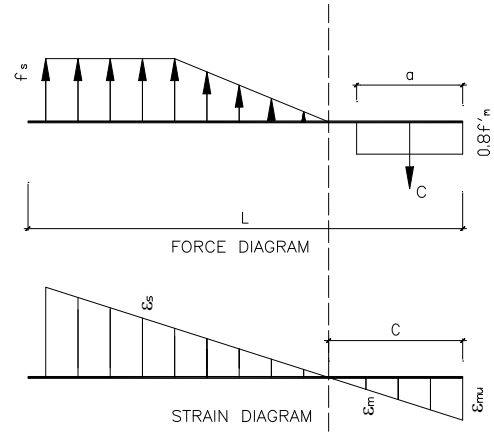

P_u = 1.2 P =	110.4	kips	<	ϕP_n =	2207.58	kips, (TMS 402 9.3.4.1.1)	
$M_u = (1/0.7)(M_x^2 + M_y^2)^{0.5}$ =	871.429	ft-kips	<	ϕM_n =	3964.52	ft-kips, at P_u level.	
			[Satisfactory]				
Where ε_{mu} =	0.0025	, (TMS 402 9.3.2.c)		d =	312	in	
ϕ =	0.9	, (TMS 402 9.1.4.1)		f_m' =	1.5	ksi	

CHECK SHEAR CAPACITY (ASD), (TMS 402 8.3.6)

$$F_v = MAX\left\{(SF)\left[\frac{1}{4}\left(4-1.75MIN\left(1\ ,\ \frac{M_T}{Vd}\right)\right)\sqrt{f'_m}+0.25\frac{P}{A_n}\right]+0.5\frac{A_v F_s d}{A_n s}\ ,\ (SF)\left[\frac{1}{2}\left(4-1.75MIN\left(1\ ,\ \frac{M_T}{Vd}\right)\right)\sqrt{f'_m}+0.25\frac{P}{A_n}\right]\right\}$$

= 80 psi > 1.5 f_v = 30 psi [Satisfactory]

(factor 1.5 from TMS 402 7.3.2.6.1.2)

$$F_{v,\ Maximum} = (SF)MIN\left[3\ ,\ MAX\left(2\ ,\ 2+\frac{4}{3}\left(1-\frac{M_T}{Vd}\right)\right)\right]\sqrt{f'_m} =$$ 103 psi > 1.5 f_v

[Satisfactory]

CHECK MINIMUM REINFORCEMENTS

$A_{sh,min}$ =	0.064	in^2/ft	<	$A_{sh,actual}$ =	0.233	in^2/ft	[Satisfactory]	(TMS 402 7.3.2.6)
$S_{sh,max}$ =	48	in	>	$S_{sh,actual}$ =	16	in	[Satisfactory]	(TMS 402 7.3.2.6)
$A_{sv,min}$ =	0.064	in^2/ft	<	$A_{sv,actual}$ =	0.150	in^2/ft	[Satisfactory]	(TMS 402 7.3.2.6)
$S_{sv,max}$ =	48	in	>	$S_{sv,actual}$ =	16	in	[Satisfactory]	(TMS 402 7.3.2.6)
$A_{total,min}$ =	0.183	in^2/ft	<	$A_{total,actual}$ =	0.383	in^2/ft	[Satisfactory]	(TMS 402 7.3.2.6)

CHECK MAXIMUM REINFORCEMENT PERCENTAGE

$$\rho_{max} = \frac{n f'_m}{2 f_y\left(n+\frac{f_y}{f'_m}\right)} =$$ 0.0044 > ρ = 0.0002 [Satisfactory]

(TMS 402 8.3.4.4)

Load Combinations

RAM Frame 17.01.01.05
DataBase: Conc. Wall - 12.08.2020 - Essex Project - 02.05.21 02/08/21 13:57:13

LOAD CASE DEFINITIONS:

D	DeadLoad	RAMUSER
Lp	PosLiveLoad	RAMUSER
E5	Seismic - Force	EQ_ASCE716_X_+E_F
E6	Seismic - Force	EQ_ASCE716_X_-E_F
E7	Seismic - Force	EQ_ASCE716_Y_+E_F
E8	Seismic - Force	EQ_ASCE716_Y_-E_F

USER DEFINED LOAD COMBINATIONS:

1	*	1.400 D
2	*	1.200 D + 1.600 Lp
3	*	1.440 D + 1.000 Lp + 1.000 E5
4	*	1.440 D + 1.000 Lp + 1.000 E6
5	*	1.440 D + 1.000 Lp + 1.000 E7
6	*	1.440 D + 1.000 Lp + 1.000 E8
7	*	1.440 D + 1.000 Lp - 1.000 E5
8	*	1.440 D + 1.000 Lp - 1.000 E6
9	*	1.440 D + 1.000 Lp - 1.000 E7
10	*	1.440 D + 1.000 Lp - 1.000 E8
11	*	1.440 D + 1.000 E5
12	*	1.440 D + 1.000 E6
13	*	1.440 D + 1.000 E7
14	*	1.440 D + 1.000 E8
15	*	1.440 D - 1.000 E5
16	*	1.440 D - 1.000 E6
17	*	1.440 D - 1.000 E7
18	*	1.440 D - 1.000 E8
19	*	0.660 D + 1.000 E5
20	*	0.660 D + 1.000 E6
21	*	0.660 D + 1.000 E7
22	*	0.660 D + 1.000 E8
23	*	0.660 D - 1.000 E5
24	*	0.660 D - 1.000 E6
25	*	0.660 D - 1.000 E7
26	*	0.660 D - 1.000 E8

* = Load combination currently selected to use

G33

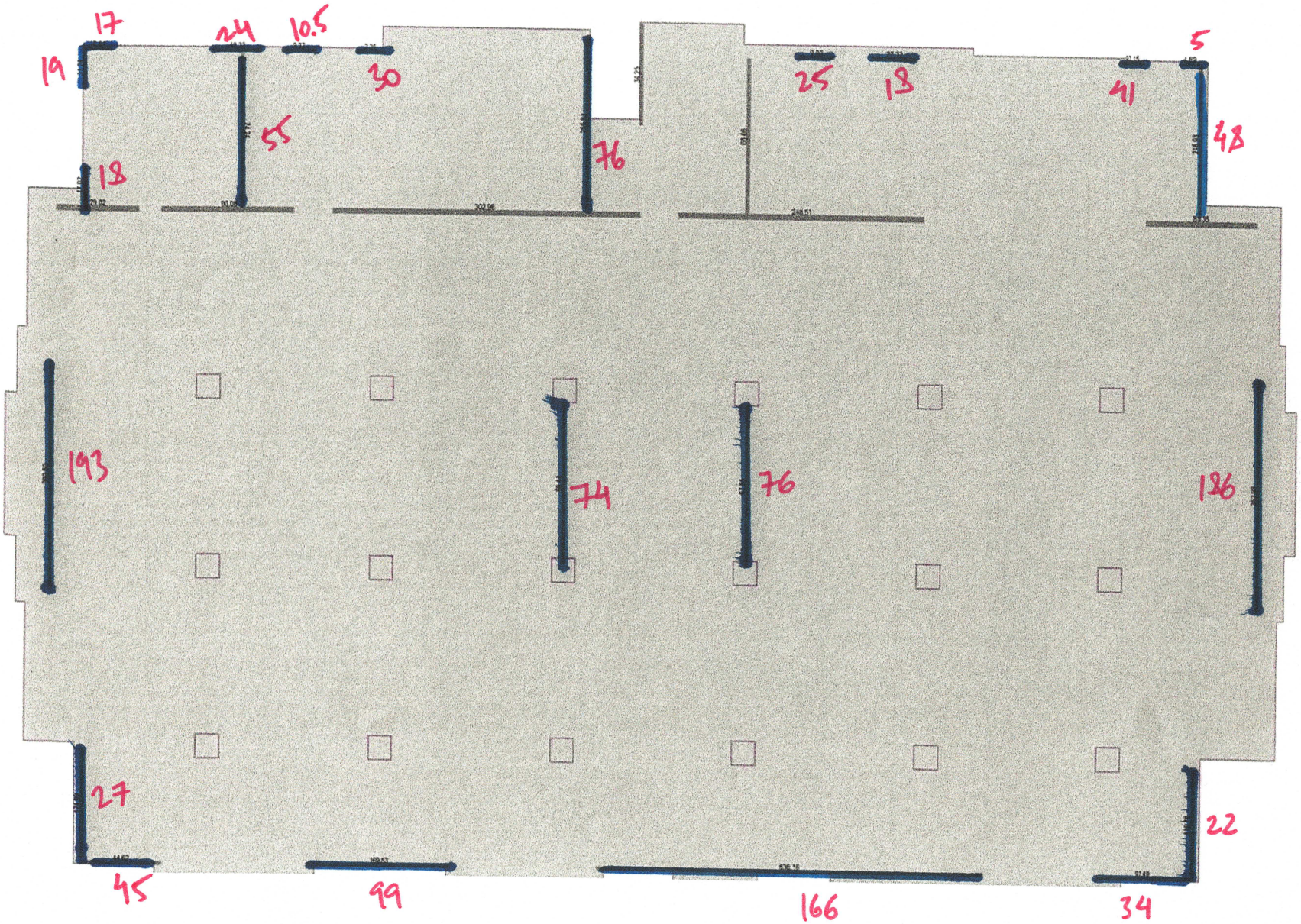

(Strength Design - Min Axial Force)

G34

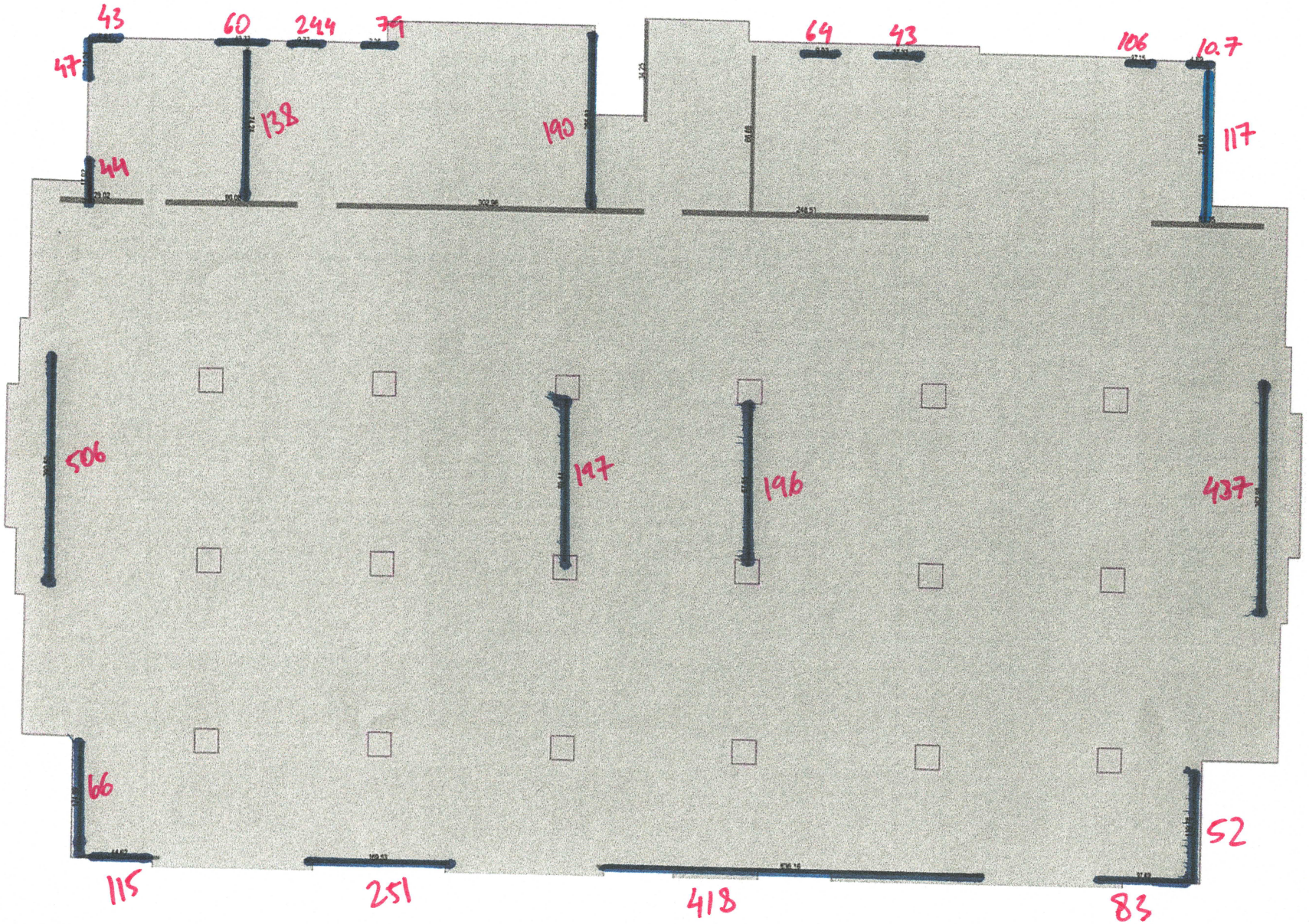

(Strength Design - Max. Axial Force)

G35

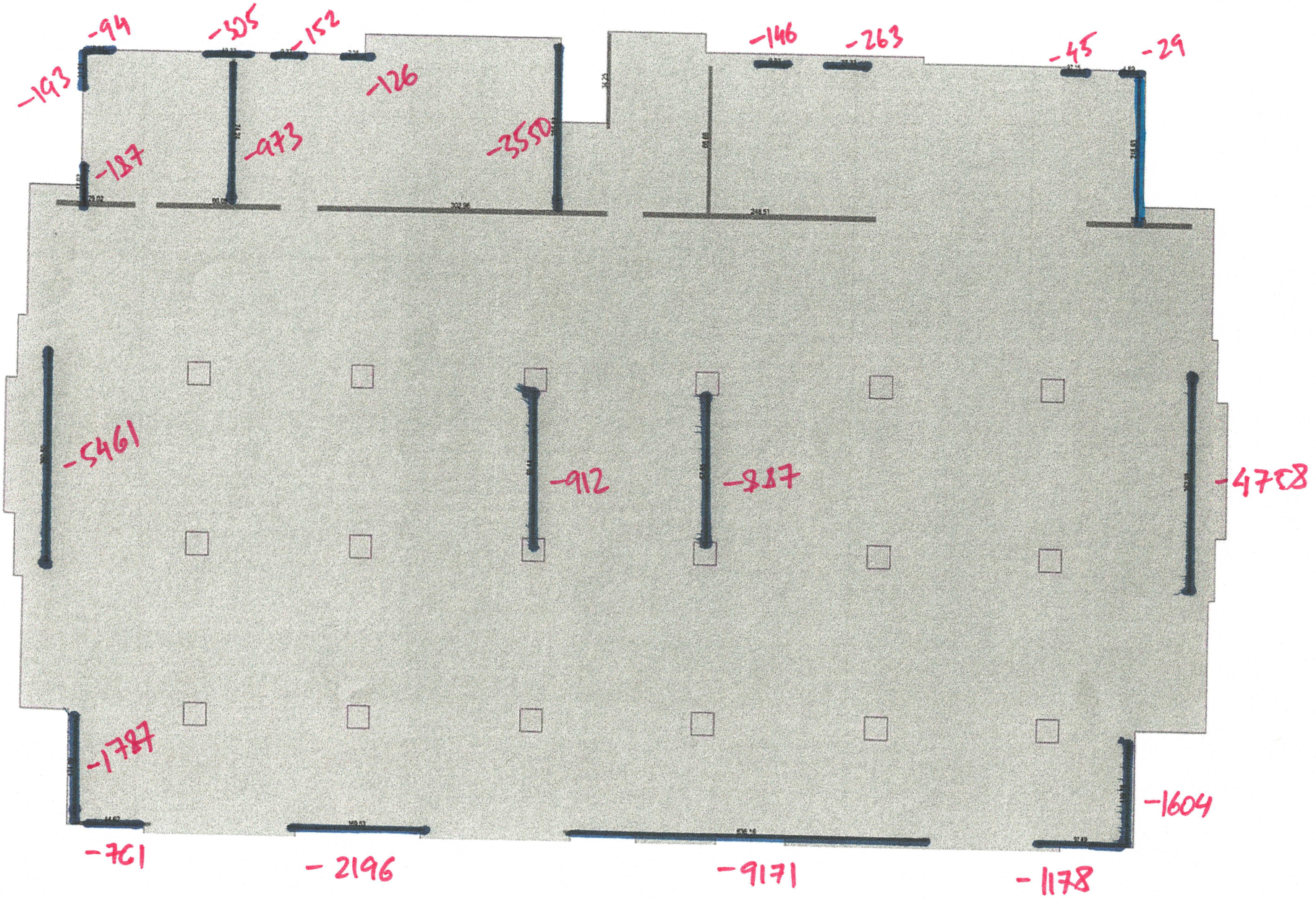

(Strength Design - Min Moment)

RAM RAMFrameAnalysis.RFAn.1
DataBase: Conc. Wall - 12.08.2020 - Essex Project - 02.05.21

02/08/2021 15:28:45

G36

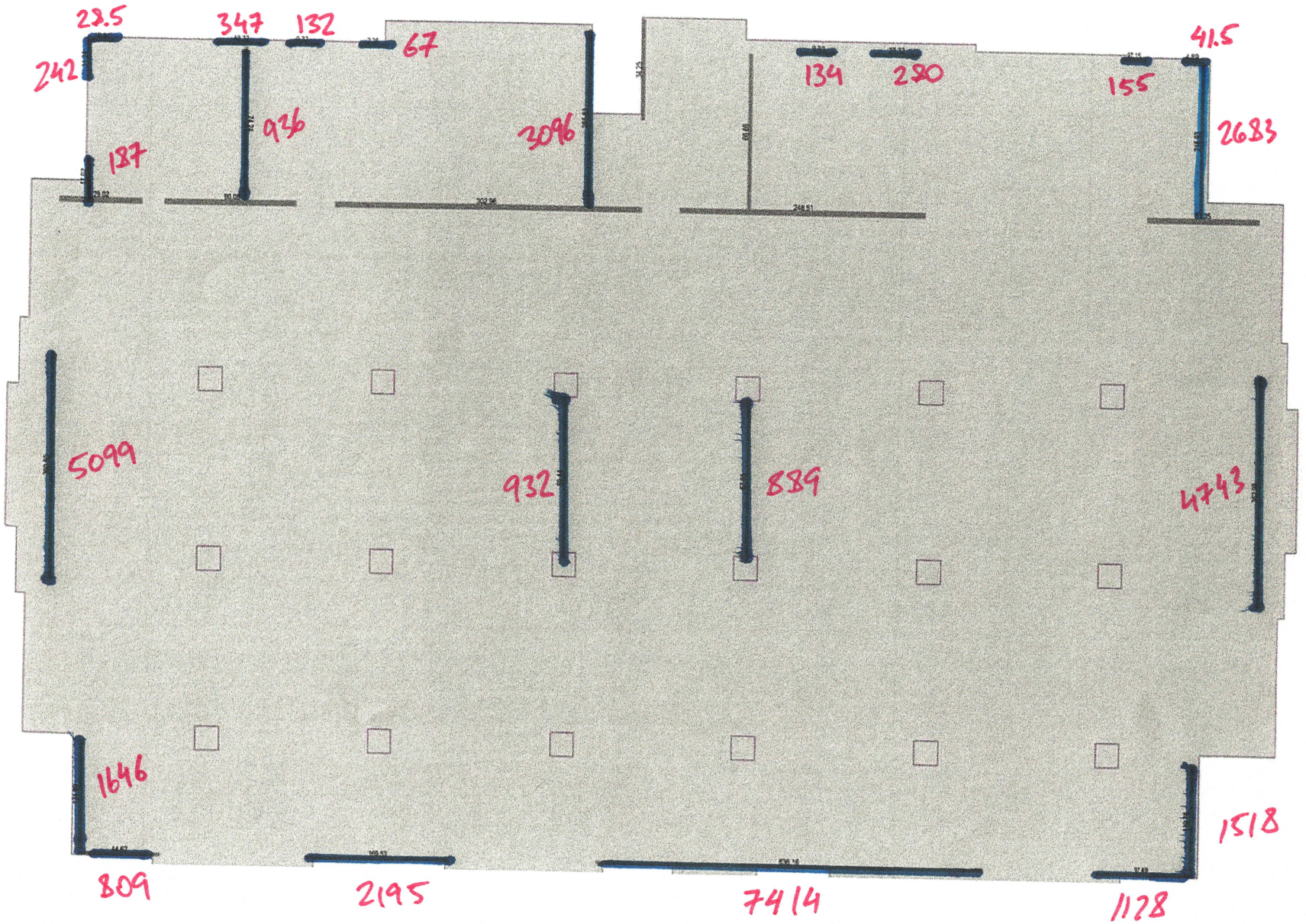

(Strength Design - Max. Moment)

G37

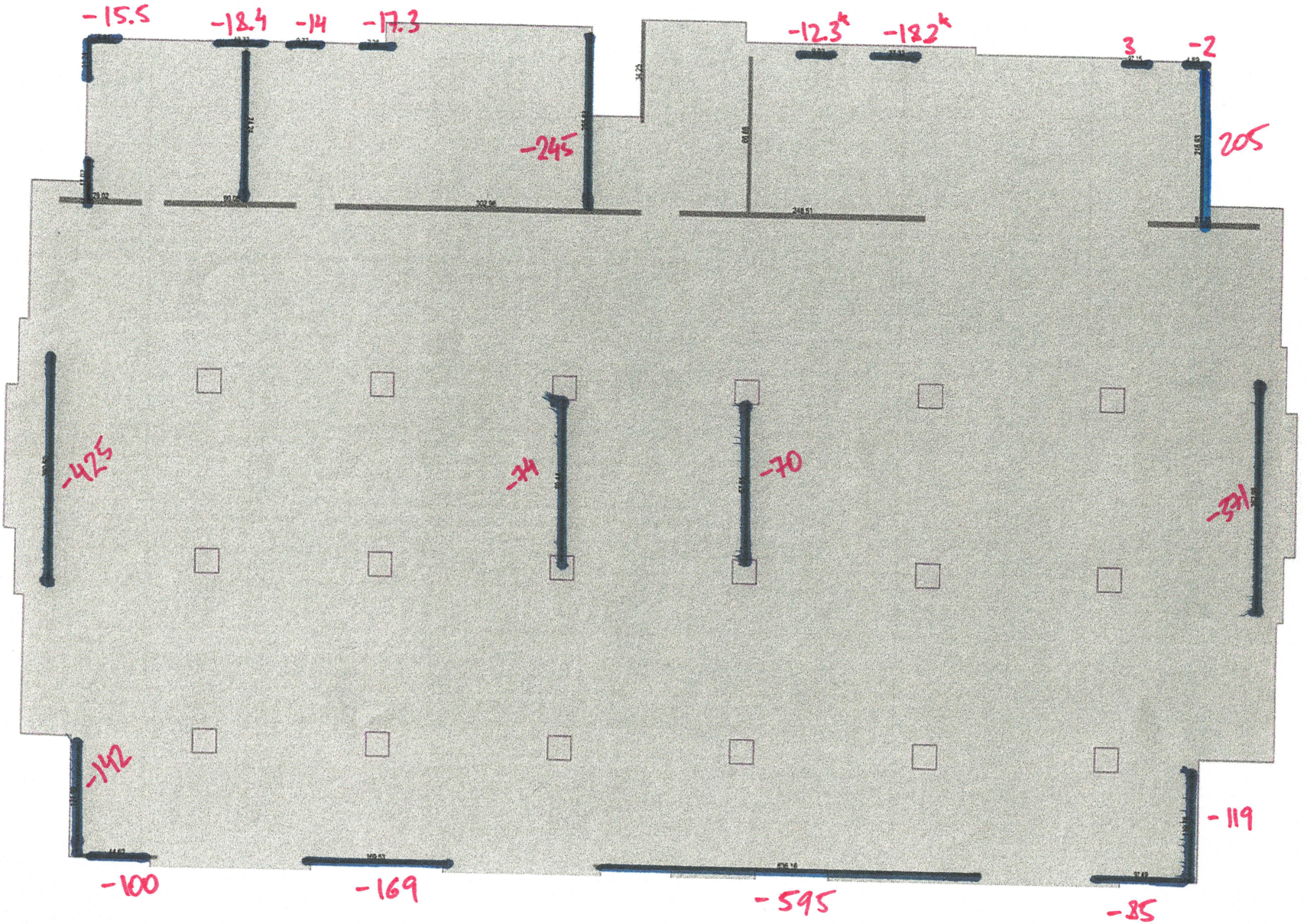

(Strength Design - Min. Shear Force)

G38

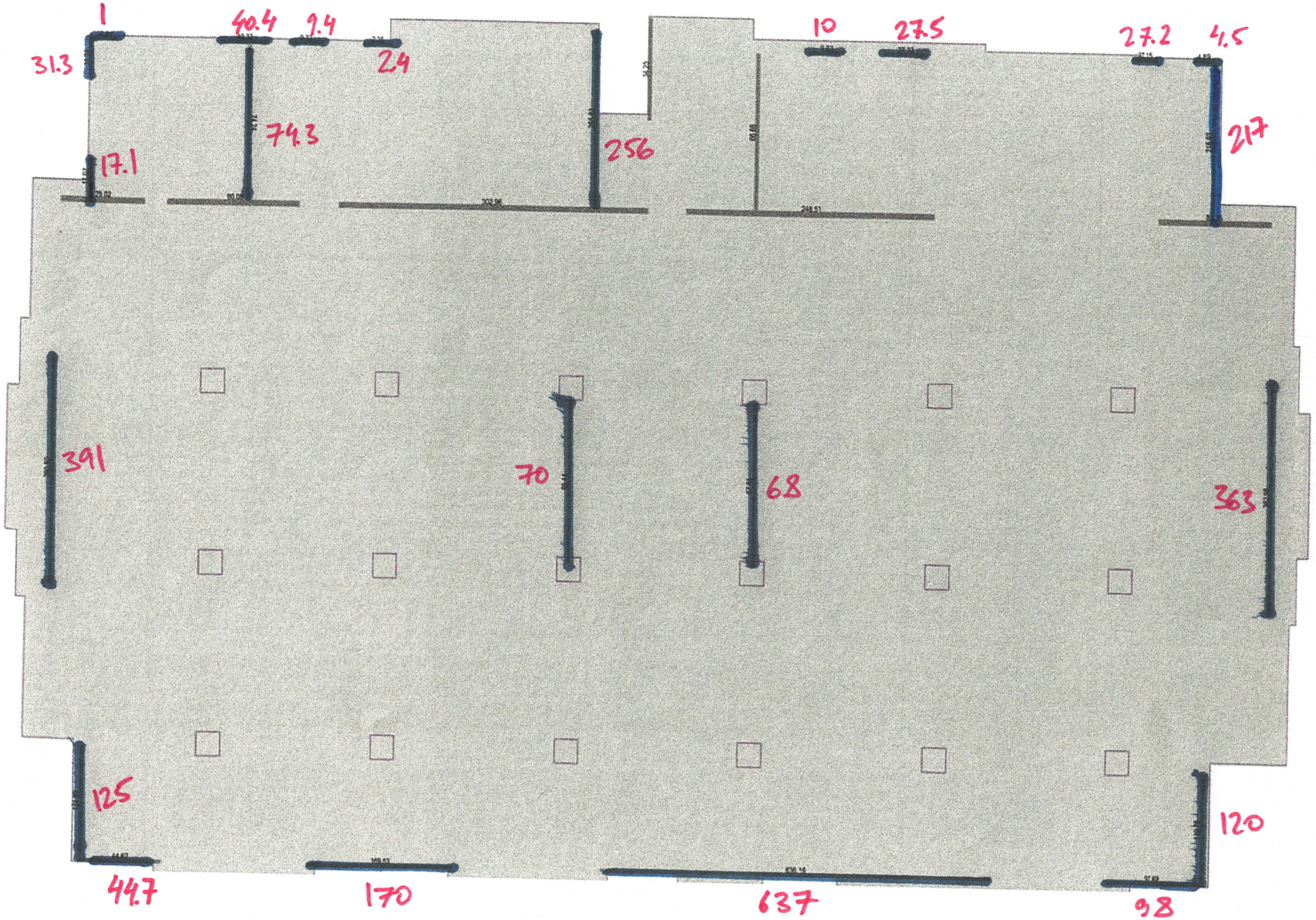

(Strength Design) - Max. Shear Force.

THANG LE & ASSOCIATES TLA STRUCTURAL ENGINEERS

PROJECT :
CLIENT :
JOB NO. : DATE :

PAGE :
DESIGN BY :
REVIEW BY :

Special Reinforced Concrete Shear Wall Design Based on ACI 318-14 & 2016 CBC Chapter A — EW1

INPUT DATA

CONCRETE STRENGTH (ACI 318 19.2.1.1)	f_c' =	4	ksi, (28 MPa)	
REBAR YIELD STRESS	f_y =	60	ksi, (414 MPa)	
FACTORED AXIAL LOAD	P_u =	43	kips, (191 kN)	
FACTORED MOMENT LOAD	M_u =	94	ft-kips, (127 kN-m)	
FACTORED SHEAR LOAD	V_u =	15.5	kips, (69 kN)	
LENGTH OF SHEAR WALL	L =	4.5	ft, (1.37 m)	
THICKNESS OF WALL	t =	8	in, (203 mm)	
DEPTH AT FLANGE	D =	8	in, (203 mm)	
WIDTH AT FLANGE	B =	8	in, (203 mm)	
TOTAL WALL HEIGHT TO TOP	h_w =	13	ft, (3.96 m)	
REINF. BARS AT BULB		1 # 5		
WALL DIST. HORIZ. REINF.		1 # 4 @ 10	in, (254 mm) o.c.	
WALL DIST. VERT. REINF.		1 # 5 @ 12	in, (305 mm) o.c.	
HOOP REINF - WIDTH, B, DIR.		2 legs of # 4		
HOOP REINF - LENGTH DIR.		2 legs of # 4		
WALL EFFECTIVELY CONTINUOUS ?		Yes	(ACI 18.10.6.2 apply)	

DESIGN SUMMARY

SHEAR WALL LENGTH	L =	4.50	ft, (1.37 m)	
SHEAR WALL THICKNESS	t =	8.00	in, (203 mm)	
END REINFORCING	1 # 5			
WALL HORIZ. REINF	1 # 4 @ 10		in. (254 mm), o.c.	
WALL VERT. REINF	1 # 5 @ 12		in. (305 mm), o.c.	
HOOP REINF - WIDTH, B, DIR.				
HOOP REINF - LENGTH DIR.				

THE WALL DESIGN IS ADEQUATE

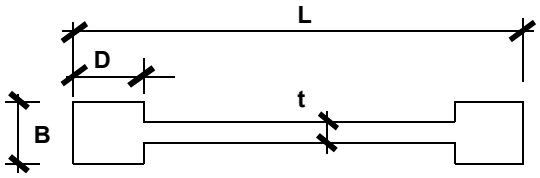

ANALYSIS

DETERMINE WHETHER THE WALL CAN RESIST SEISMIC LOADS (2016 CBC 1905A)

Pu = 43 k < 0.35 A_g f_c' = 605 k [Satisfactory]

where A_g = 432 in^2.

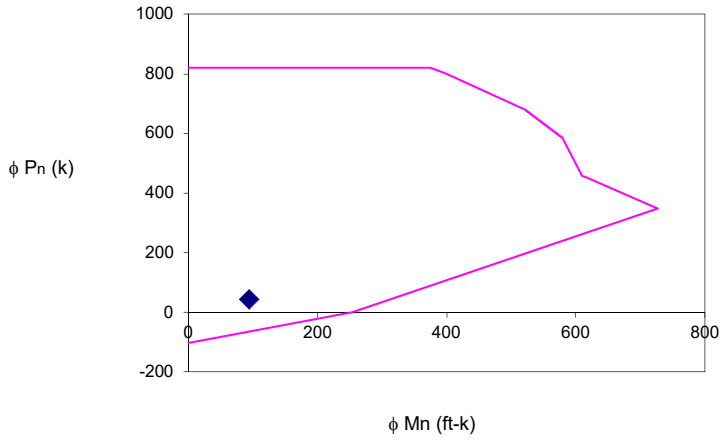

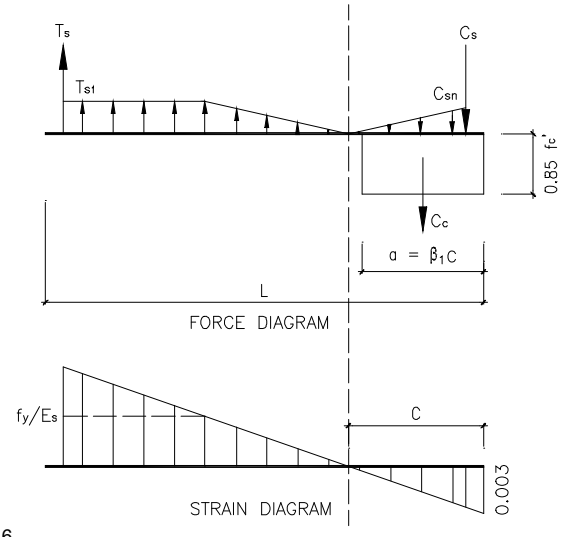

CHECK MINIMUM REINFORCEMENT RATIOS AND SPACING (ACI 318-14 18.10.2.1 & 11.6. . ,

$(\rho_t)_{min.}$ = 0.0020 [for $A_{cv}(f_c')^{0.5}$ = 27.32 kips > Vu , and bar size # 4 horizontal]

$(\rho_l)_{min.}$ = 0.0012 [for $A_{cv}(f_c')^{0.5}$ = 27.32 kips > Vu , and bar size # 5 vertical]

$(\rho_t)_{provd.}$ = 0.0025 > $(\rho_t)_{min.}$ [Satisfactory]

$(\rho_l)_{provd.}$ = 0.0032 > $(\rho_l)_{min.}$ [Satisfactory]

where A_{cv} = 432 in^2 (gross area of concrete section bounded by web thickness and length in the shear direction)

The proposed spacing is less than the maximum permissible value of 18 in and is satisfactory. Since wall V_u < $2 A_{cv}(f_c')^{0.5}$, one curtain reinforcement required. (ACI 318-14 18.10.2.2)

CHECK SHEAR CAPACITY (ACI 318-14 18.10.4.1 & 18.10.4.4)

ϕV_n =MIN [$\phi A_{cv}(\alpha_c (f_c')^{0.5} + \rho_t f_y)$, $\phi 8 A_{cv}(f_c')^{0.5}$] = 71.67 kips > V_u [Satisfactory]

where ϕ = 0.60 (conservatively, ACI 318-14 21.2)

α_c = 2.0 (for h_w / L = 2.89 > 2)

ρ_l > ρ_t [Satisfactory] (only for h_w / L > 2.0, ACI 318-14 18.10.4.3)

(cont'd)

CHECK FLEXURAL & AXIAL CAPACITY

MAXIMUM DESIGN AXIAL LOAD STRENGTH (ACI 318-14 18 & 22.4)

$\phi P_{max} = 0.8\ \phi\ [\ 0.85\ f_c'\ (A_g - A_{st}) + f_y A_{st}]$ = 820.04 kips. > P_u [Satisfactory]

where ϕ = 0.65 (ACI 318-14 21.2)

A_{st} = 1.91 in^2.

DESIGN MOMENT CAPACITY AT MAXIMUM AXIAL LOAD STRENGTH ARE FROM 0 TO 375 ft-kips.

FOR THE BALANCED STRAIN CONDITION UNDER COMBINED FLEXURE AND AXIAL LOAD, THE MAXIMUM STRAIN IN THE CONCRETE AND IN THE TENSION REINFORCEMENT MUST SIMULTANEOUSLY REACH THE VALUES SPECIFIED IN ACI 318-14 21.2.2

AS ε_c = 0.003 AND $\varepsilon_t = f_y / E_s$ = 0.002069 . THE DEPTH TO THE NEUTRAL AXIS AND EQUIVALENT RECTANGULAR CONCRETE STRESS BLOCK ARE GIVEN BY

$C_b = d\ \varepsilon_c / (\varepsilon_c + \varepsilon_s)$ = 30 in $a = C_b\ \beta_1$ = 25 in β_1 = 0.85 (ACI 318-14 22.2.2.4.3)

$\phi = 0.65 + (\varepsilon_t - 0.002)(250/3)$ = 0.656 (ACI 318-14 21.2) d = (L - 0.5D) = 50 in

DESIGN AXIAL AND MOMENT CAPACITIES AT THE BALANCED STRAIN CONDITION ARE 454 kips AND 615 ft-kips.

IN ACCORDANCE WITH ACI 318-14 21.2 THE DESIGN MOMENT CAPACITY WITHOUT AXIAL LOAD IS

$\phi M_n = 0.9\ M_n$ = 254 kips.

TO KEEP TENSION SECTION WITH SHEAR CAPACITY PER ACI 11.5.4.6, THE PURE AXIAL TENSION CAPACITY IS

$-\phi P_n = -0.9\ MIN(A_{st} F_y\ ,\ 3.3\ f_c'^{0.5}\ 4\ L\ t\ )$ = -103 kips.

SUMMARY OF LOAD VERSUS MOMENT CAPACITIES ARE SHOWN IN THE TABLE BELOW, AND THEY ARE PLOTTED ON THE INTERACTION DIAGRAM AT FRONT PAGE.

		ϕP_n (kips)	ϕM_n (ft-kips)
AT AXIAL LOAD ONLY	=	820	0
AT MAXIMUM LOAD	=	820	375
AT 0 % TENSION	=	801	399
AT 25 % TENSION	=	680	522
AT 50 % TENSION	=	587	579
AT ε_t = 0.002	=	458	610
AT BALANCED CONDITION	=	454	615
AT ε_t = 0.005	=	349	727
AT FLEXURE ONLY	=	0	254
AT TENSION ONLY	=	-103	0

DESIGN FORCES P_u & M_u ARE ALSO PLOTTED ON THE INTERACTION DIAGRAM. FROM THE INTERACTION DIAGRAM.

THE ALLOWABLE MOMENT AT AN AXIAL LOAD P_u IS GIVEN BY

ϕM_n = 332 kips. > M_u [Satisfactory]

where $\phi = Min\{0.9, Max[0.65 + (\varepsilon_t - 0.002)(250/3)\ ,\ 0.65]\}$ = 0.900 (ACI 318-14 21.2)

CHECK BOUNDARY ZONE REQUIREMENTS

AN EXEMPTION FROM THE PROVISION OF BOUNDARY ZONE CONFINEMENT REINFORCEMENT IS GIVEN BY ACI 318-14 18.10.6.2, 18.10.6.3, and 18.10.6.5(a) PROVIDED THAT

$c < (L\ h_w) / 1.5(600\ \delta_u)$ for ACI 21.9.6.2 apply or $f_c < 0.2\ f_c'$ for ACI 18.10.6.3 apply [Satisfactory]

where c = 7 in. (distance from the extreme compression fiber to neutral axis at P_u & M_n loads.)

δ_u = 0.8 in. (design displacement, assume $0.005h_w$ as a conservative short cut, see ACI 318-14 18.10.6.2.)

$f_c = (P_u / A) + (M_u\ y / I)$ = 0.376 ksi. (the maximum extreme fiber compressive stress at P_u & M_u loads.)

y = 27 in. (distance from the extreme compression fiber to neutral axis at P_u & M_u loads.)

A = 447 in^2. (area of transformed section.)

I = 108713 in^4. (moment of inertia of transformed section.)

Or the longitudinal reinforcement ratio at the wall end = 0.005 < $400 / f_y$ [Satisfactory]

HENCE BOUNDARY ZONE DETAIL REQUIREMENTS ARE NOT NECESSARY AND OMIT THE CALCULATIONS BELOW.

The boundary element length = MAX(c - 0.1L , 0.5 c) = 3.33 in. (ACI 318-14 18.10.6.4)

The maximum hoop spacing = MIN[B/4 , $6d_b$, 6 , $4+(14-h_x)/3$] = 8 in.o.c. (ACI 318-14 18.10.6.2 & 18.10.6.5)

$A_{sh,\ B\ DIR} = (0.09\ s\ h_c\ f_c')\ /\ f_{yh}$ = N/A in^2.

$A_{sh,\ L\ DIR} = (0.09\ s\ h_c\ f_c')\ /\ f_{yh}$ = N/A in^2.

THANG LE & ASSOCIATES TLA STRUCTURAL ENGINEERS

PROJECT :
CLIENT :
JOB NO. : DATE :

PAGE :
DESIGN BY :
REVIEW BY :

Special Reinforced Concrete Shear Wall Design Based on ACI 318-14 & 2016 CBC Chapter A — EW2

INPUT DATA

CONCRETE STRENGTH (ACI 318 19.2.1.1)	f_c' =	4	ksi, (28 MPa)	
REBAR YIELD STRESS	f_y =	60	ksi, (414 MPa)	
FACTORED AXIAL LOAD	P_u =	60	kips, (267 kN)	
FACTORED MOMENT LOAD	M_u =	347	ft-kips, (470 kN-m)	
FACTORED SHEAR LOAD	V_u =	40.4	kips, (180 kN)	
LENGTH OF SHEAR WALL	L =	8	ft, (2.44 m)	
THICKNESS OF WALL	t =	8	in, (203 mm)	
DEPTH AT FLANGE	D =	8	in, (203 mm)	
WIDTH AT FLANGE	B =	8	in, (203 mm)	
TOTAL WALL HEIGHT TO TOP	h_w =	13	ft, (3.96 m)	
REINF. BARS AT BULB		1	# 5	
WALL DIST. HORIZ. REINF.	1	#	4 @ 10	in, (254 mm) o.c.
WALL DIST. VERT. REINF.	1	#	5 @ 12	in, (305 mm) o.c.
HOOP REINF - WIDTH, B, DIR.	2	legs of #	4	
HOOP REINF - LENGTH DIR.	2	legs of #	4	
WALL EFFECTIVELY CONTINUOUS ?			Yes	(ACI 18.10.6.2 apply)

DESIGN SUMMARY

SHEAR WALL LENGTH	L =	8.00	ft, (2.44 m)		
SHEAR WALL THICKNESS	t =	8.00	in, (203 mm)		
END REINFORCING	1	# 5			
WALL HORIZ. REINF	1 #	4	@ 10	in. (254 mm), o.c.	
WALL VERT. REINF	1 #	5	@ 12	in. (305 mm), o.c.	
HOOP REINF - WIDTH, B, DIR.					
HOOP REINF - LENGTH DIR.					

THE WALL DESIGN IS ADEQUATE

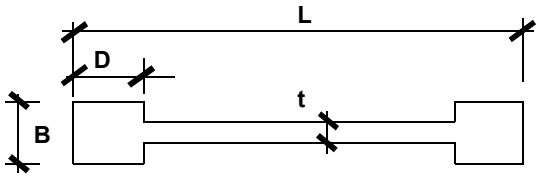

ANALYSIS

DETERMINE WHETHER THE WALL CAN RESIST SEISMIC LOADS (2016 CBC 1905A)

Pu = 60 k < 0.35 A_g f_c' = 1075 k [Satisfactory]

where A_g = 768 in^2.

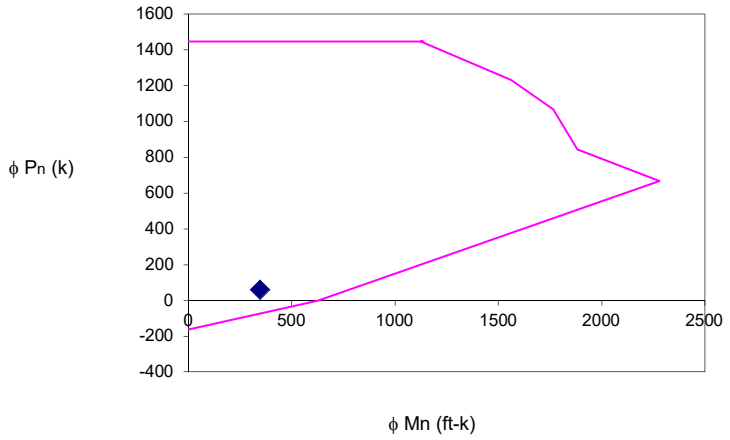

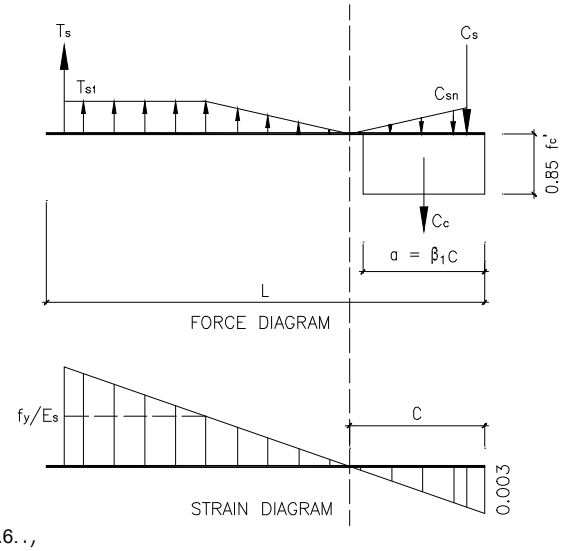

CHECK MINIMUM REINFORCEMENT RATIOS AND SPACING (ACI 318-14 18.10.2.1 & 11.6. . ,

$(\rho_t)_{min.}$ = 0.0020 [for $A_{cv}(f_c')^{0.5}$ = 48.57 kips > Vu , and bar size # 4 horizontal]

$(\rho_l)_{min.}$ = 0.0012 [for $A_{cv}(f_c')^{0.5}$ = 48.57 kips > Vu , and bar size # 5 vertical]

$(\rho_t)_{provd.}$ = 0.0025 > $(\rho_t)_{min.}$ [Satisfactory]

$(\rho_l)_{provd.}$ = 0.0032 > $(\rho_l)_{min.}$ [Satisfactory]

where A_{cv} = 768 in^2 (gross area of concrete section bounded by web thickness and length in the shear direction)

The proposed spacing is less than the maximum permissible value of 18 in and is satisfactory. Since wall V_u < $2 A_{cv}(f_c')^{0.5}$, one curtain reinforcement required. (ACI 318-14 18.10.2.2)

CHECK SHEAR CAPACITY (ACI 318-14 18.10.4.1 & 18.10.4.4)

ϕV_n =MIN [$\phi A_{cv}(\alpha_c (f_c')^{0.5} + \rho_t f_y)$, $\phi 8 A_{cv}(f_c')^{0.5}$] = 149.26 kips > V_u [Satisfactory]

where ϕ = 0.60 (conservatively, ACI 318-14 21.2)

α_c = 2.8 (for h_w / L = 1.63 @ [1.5, 2])

ρ_l > ρ_t [Satisfactory] (only for h_w / L > 2.0, ACI 318-14 18.10.4.3)

(cont'd)

CHECK FLEXURAL & AXIAL CAPACITY

MAXIMUM DESIGN AXIAL LOAD STRENGTH (ACI 318-14 18 & 22.4)

$\phi P_{max} = 0.8\ \phi\ [\ 0.85\ f_c'\ (A_g - A_{st}) + f_y A_{st}]$ = 1446 kips. > P_u [Satisfactory]

where ϕ = 0.65 (ACI 318-14 21.2)

A_{st} = 3.00 in^2.

DESIGN MOMENT CAPACITY AT MAXIMUM AXIAL LOAD STRENGTH ARE FROM 0 TO 1137 ft-kips.

FOR THE BALANCED STRAIN CONDITION UNDER COMBINED FLEXURE AND AXIAL LOAD, THE MAXIMUM STRAIN IN THE CONCRETE AND IN THE TENSION REINFORCEMENT MUST SIMULTANEOUSLY REACH THE VALUES SPECIFIED IN ACI 318-14 21.2.2

AS ε_c = 0.003 AND $\varepsilon_t = f_y / E_s$ = 0.002069 . THE DEPTH TO THE NEUTRAL AXIS AND EQUIVALENT RECTANGULAR CONCRETE STRESS BLOCK ARE GIVEN BY

$C_b = d\ \varepsilon_c / (\varepsilon_c + \varepsilon_s)$ = 54 in $a = C_b\ \beta_1$ = 46 in β_1 = 0.85 (ACI 318-14 22.2.2.4.3)

$\phi = 0.65 + (\varepsilon_t - 0.002)(250/3)$ = 0.656 (ACI 318-14 21.2) d = (L - 0.5D) = 92 in

DESIGN AXIAL AND MOMENT CAPACITIES AT THE BALANCED STRAIN CONDITION ARE 837 kips AND 1903 ft-kips.

IN ACCORDANCE WITH ACI 318-14 21.2 THE DESIGN MOMENT CAPACITY WITHOUT AXIAL LOAD IS

$\phi M_n = 0.9\ M_n$ = 627 kips.

TO KEEP TENSION SECTION WITH SHEAR CAPACITY PER ACI 11.5.4.6, THE PURE AXIAL TENSION CAPACITY IS

$-\phi P_n = -0.9\ MIN(A_{st} F_y\ ,\ 3.3\ f_c'^{0.5}\ 4\ L\ t\ )$ = -162 kips.

SUMMARY OF LOAD VERSUS MOMENT CAPACITIES ARE SHOWN IN THE TABLE BELOW, AND THEY ARE PLOTTED ON THE INTERACTION DIAGRAM AT FRONT PAGE.

		ϕP_n (kips)	ϕM_n (ft-kips)
AT AXIAL LOAD ONLY	=	1446	0
AT MAXIMUM LOAD	=	1446	1137
AT 0 % TENSION	=	1446	1124
AT 25 % TENSION	=	1234	1561
AT 50 % TENSION	=	1069	1766
AT ε_t = 0.002	=	843	1885
AT BALANCED CONDITION	=	837	1903
AT ε_t = 0.005	=	670	2279
AT FLEXURE ONLY	=	0	627
AT TENSION ONLY	=	-162	0

DESIGN FORCES P_u & M_u ARE ALSO PLOTTED ON THE INTERACTION DIAGRAM. FROM THE INTERACTION DIAGRAM.

THE ALLOWABLE MOMENT AT AN AXIAL LOAD P_u IS GIVEN BY

ϕM_n = 831 kips. > M_u [Satisfactory]

where $\phi = Min\{0.9, Max[0.65 + (\varepsilon_t - 0.002)(250/3)\ ,\ 0.65]\}$ = 0.900 (ACI 318-14 21.2)

CHECK BOUNDARY ZONE REQUIREMENTS

AN EXEMPTION FROM THE PROVISION OF BOUNDARY ZONE CONFINEMENT REINFORCEMENT IS GIVEN BY ACI 318-14 18.10.6.2, 18.10.6.3, and 18.10.6.5(a) PROVIDED THAT

$c < (L\ h_w) / 1.5(600\ \delta_u)$ for ACI 21.9.6.2 apply or $f_c < 0.2\ f_c'$ for ACI 18.10.6.3 apply [Satisfactory]

where c = 9 in. (distance from the extreme compression fiber to neutral axis at P_u & M_n loads.)

δ_u = 0.8 in. (design displacement, assume $0.005h_w$ as a conservative short cut, see ACI 318-14 18.10.6.2.)

$f_c = (P_u / A) + (M_u\ y / I)$ = 0.404 ksi. (the maximum extreme fiber compressive stress at P_u & M_u loads.)

y = 48 in. (distance from the extreme compression fiber to neutral axis at P_u & M_u loads.)

A = 792 in^2. (area of transformed section.)

I = 608338 in^4. (moment of inertia of transformed section.)

Or the longitudinal reinforcement ratio at the wall end = 0.005 < $400 / f_y$ [Satisfactory]

HENCE BOUNDARY ZONE DETAIL REQUIREMENTS ARE NOT NECESSARY AND OMIT THE CALCULATIONS BELOW.

The boundary element length = MAX(c - 0.1L , 0.5 c) = 4.58 in. (ACI 318-14 18.10.6.4)

The maximum hoop spacing = MIN[B/4 , $6d_b$, 6 , $4+(14-h_x)/3$] = 8 in.o.c. (ACI 318-14 18.10.6.2 & 18.10.6.5)

$A_{sh,\ B\ DIR} = (0.09\ s\ h_c\ f_c')\ /\ f_{yh}$ = N/A in^2.

$A_{sh,\ L\ DIR} = (0.09\ s\ h_c\ f_c')\ /\ f_{yh}$ = N/A in^2.

THANG LE & ASSOCIATES TLA STRUCTURAL ENGINEERS

PROJECT :
CLIENT :
JOB NO. : DATE :

PAGE :
DESIGN BY :
REVIEW BY :

Special Reinforced Concrete Shear Wall Design Based on ACI 318-14 & 2016 CBC Chapter A — EW3

INPUT DATA

CONCRETE STRENGTH (ACI 318 19.2.1.1)	f_c' =	4	ksi, (28 MPa)	
REBAR YIELD STRESS	f_y =	60	ksi, (414 MPa)	
FACTORED AXIAL LOAD	P_u =	24.4	kips, (109 kN)	
FACTORED MOMENT LOAD	M_u =	152	ft-kips, (206 kN-m)	
FACTORED SHEAR LOAD	V_u =	14	kips, (62 kN)	
LENGTH OF SHEAR WALL	L =	6.5	ft, (1.98 m)	
THICKNESS OF WALL	t =	8	in, (203 mm)	
DEPTH AT FLANGE	D =	8	in, (203 mm)	
WIDTH AT FLANGE	B =	8	in, (203 mm)	
TOTAL WALL HEIGHT TO TOP	h_w =	13	ft, (3.96 m)	

REINF. BARS AT BULB		1	#	5		
WALL DIST. HORIZ. REINF.	1	#	4	@	10	in, (254 mm) o.c.
WALL DIST. VERT. REINF.	1	#	5	@	12	in, (305 mm) o.c.
HOOP REINF - WIDTH, B, DIR.	2	legs of	#	4		
HOOP REINF - LENGTH DIR.	2	legs of	#	4		
WALL EFFECTIVELY CONTINUOUS ?				Yes		(ACI 18.10.6.2 apply)

DESIGN SUMMARY

SHEAR WALL LENGTH	L	=	6.50	ft, (1.98 m)	
SHEAR WALL THICKNESS	t	=	8.00	in, (203 mm)	
END REINFORCING	1	#	5		
WALL HORIZ. REINF	1 #	4	@	10	in. (254 mm), o.c.
WALL VERT. REINF	1 #	5	@	12	in. (305 mm), o.c.
HOOP REINF - WIDTH, B, DIR.					
HOOP REINF - LENGTH DIR.					

THE WALL DESIGN IS ADEQUATE

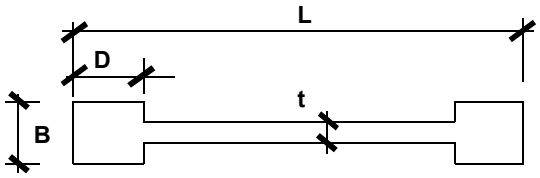

ANALYSIS

DETERMINE WHETHER THE WALL CAN RESIST SEISMIC LOADS (2016 CBC 1905A)

Pu = 24.4 k < 0.35 A_g f_c' = 874 k [Satisfactory]

where A_g = 624 in^2.

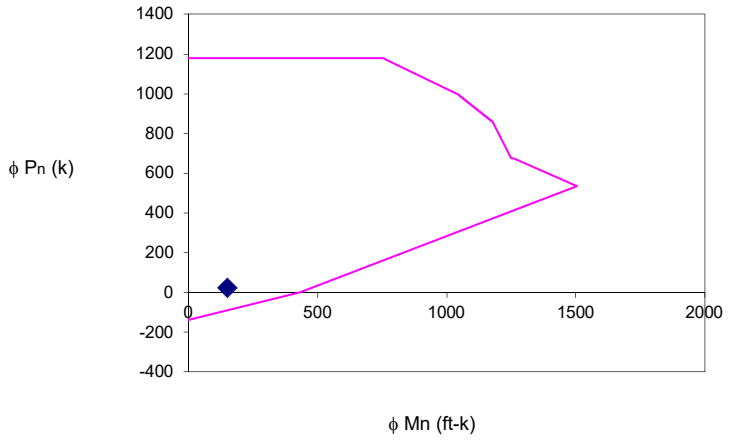

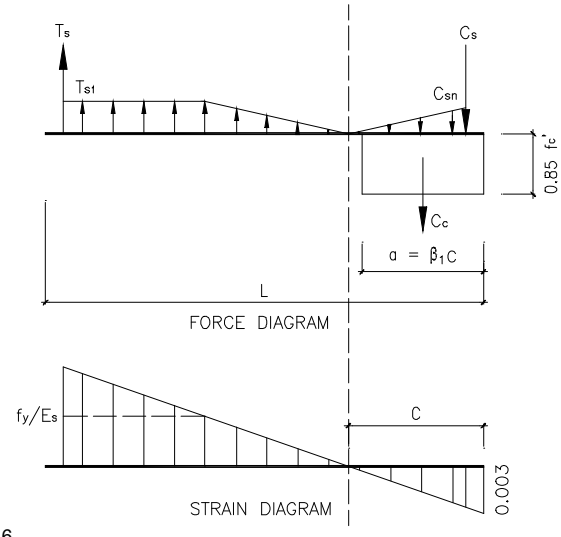

CHECK MINIMUM REINFORCEMENT RATIOS AND SPACING (ACI 318-14 18.10.2.1 & 11.6. . ,

$(\rho_t)_{min.}$ = 0.0020 [for $A_{cv}(f_c')^{0.5}$ = 39.47 kips > Vu , and bar size # 4 horizontal]

$(\rho_l)_{min.}$ = 0.0012 [for $A_{cv}(f_c')^{0.5}$ = 39.47 kips > Vu , and bar size # 5 vertical]

$(\rho_t)_{provd.}$ = 0.0025 > $(\rho_t)_{min.}$ [Satisfactory]

$(\rho_l)_{provd.}$ = 0.0032 > $(\rho_l)_{min.}$ [Satisfactory]

where A_{cv} = 624 in^2 (gross area of concrete section bounded by web thickness and length in the shear direction)

The proposed spacing is less than the maximum permissible value of 18 in and is satisfactory. Since wall V_u < $2 A_{cv}(f_c')^{0.5}$, one curtain reinforcement required. (ACI 318-14 18.10.2.2)

CHECK SHEAR CAPACITY (ACI 318-14 18.10.4.1 & 18.10.4.4)

ϕV_n =MIN [$\phi A_{cv}(\alpha_c (f_c')^{0.5} + \rho_t f_y)$, $\phi 8 A_{cv}(f_c')^{0.5}$] = 103.52 kips > V_u [Satisfactory]

where ϕ = 0.60 (conservatively, ACI 318-14 21.2)

α_c = 2.0 (for h_w / L = 2.00 @ [1.5, 2])

ρ_l > ρ_t [Satisfactory] (only for h_w / L > 2.0, ACI 318-14 18.10.4.3)

(cont'd)

CHECK FLEXURAL & AXIAL CAPACITY

MAXIMUM DESIGN AXIAL LOAD STRENGTH (ACI 318-14 18 & 22.4)

$\phi P_{max} = 0.8\ \phi\ [\ 0.85\ f_c'\ (A_g - A_{st}) + f_y A_{st}]$ = 1177.7 kips. > P_u [Satisfactory]

where ϕ = 0.65 (ACI 318-14 21.2)

A_{st} = 2.53 in^2.

DESIGN MOMENT CAPACITY AT MAXIMUM AXIAL LOAD STRENGTH ARE FROM 0 TO 754 ft-kips.

FOR THE BALANCED STRAIN CONDITION UNDER COMBINED FLEXURE AND AXIAL LOAD, THE MAXIMUM STRAIN IN THE CONCRETE AND IN THE TENSION REINFORCEMENT MUST SIMULTANEOUSLY REACH THE VALUES SPECIFIED IN ACI 318-14 21.2.2

AS ε_c = 0.003 AND $\varepsilon_t = f_y / E_s$ = 0.002069 . THE DEPTH TO THE NEUTRAL AXIS AND EQUIVALENT RECTANGULAR CONCRETE STRESS BLOCK ARE GIVEN BY

$C_b = d\ \varepsilon_c / (\varepsilon_c + \varepsilon_s)$ = 44 in $a = C_b\ \beta_1$ = 37 in β_1 = 0.85 (ACI 318-14 22.2.2.4.3)

$\phi = 0.65 + (\varepsilon_t - 0.002)(250/3)$ = 0.656 (ACI 318-14 21.2) d = (L - 0.5D) = 74 in

DESIGN AXIAL AND MOMENT CAPACITIES AT THE BALANCED STRAIN CONDITION ARE 673 kips AND 1262 ft-kips.

IN ACCORDANCE WITH ACI 318-14 21.2 THE DESIGN MOMENT CAPACITY WITHOUT AXIAL LOAD IS

$\phi M_n = 0.9\ M_n$ = 431 kips.

TO KEEP TENSION SECTION WITH SHEAR CAPACITY PER ACI 11.5.4.6, THE PURE AXIAL TENSION CAPACITY IS

$-\phi P_n = -0.9\ MIN(A_{st} F_y\ ,\ 3.3\ f_c'^{0.5}\ 4\ L\ t\ )$ = -137 kips.

SUMMARY OF LOAD VERSUS MOMENT CAPACITIES ARE SHOWN IN THE TABLE BELOW, AND THEY ARE PLOTTED ON THE INTERACTION DIAGRAM AT FRONT PAGE.

		ϕP_n (kips)	ϕM_n (ft-kips)
AT AXIAL LOAD ONLY	=	1178	0
AT MAXIMUM LOAD	=	1178	754
AT 0 % TENSION	=	1170	768
AT 25 % TENSION	=	995	1047
AT 50 % TENSION	=	861	1177
AT ε_t = 0.002	=	677	1250
AT BALANCED CONDITION	=	673	1262
AT ε_t = 0.005	=	535	1504
AT FLEXURE ONLY	=	0	431
AT TENSION ONLY	=	-137	0

DESIGN FORCES P_u & M_u ARE ALSO PLOTTED ON THE INTERACTION DIAGRAM. FROM THE INTERACTION DIAGRAM.

THE ALLOWABLE MOMENT AT AN AXIAL LOAD P_u IS GIVEN BY

ϕM_n = 499 kips. > M_u [Satisfactory]

where $\phi = Min\{0.9, Max[0.65 + (\varepsilon_t - 0.002)(250/3)\ ,\ 0.65]\}$ = 0.900 (ACI 318-14 21.2)

CHECK BOUNDARY ZONE REQUIREMENTS

AN EXEMPTION FROM THE PROVISION OF BOUNDARY ZONE CONFINEMENT REINFORCEMENT IS GIVEN BY ACI 318-14 18.10.6.2, 18.10.6.3, and 18.10.6.5(a) PROVIDED THAT

$c < (L\ h_w) / 1.5(600\ \delta_u)$ for ACI 21.9.6.2 apply or $f_c < 0.2\ f_c'$ for ACI 18.10.6.3 apply [Satisfactory]

where c = 7 in. (distance from the extreme compression fiber to neutral axis at P_u & M_n loads.)

δ_u = 0.8 in. (design displacement, assume $0.005h_w$ as a conservative short cut, see ACI 318-14 18.10.6.2.)

$f_c = (P_u / A) + (M_u\ y / I)$ = 0.256 ksi. (the maximum extreme fiber compressive stress at P_u & M_u loads.)

y = 39 in. (distance from the extreme compression fiber to neutral axis at P_u & M_u loads.)

A = 644 in^2. (area of transformed section.)

I = 326693 in^4. (moment of inertia of transformed section.)

Or the longitudinal reinforcement ratio at the wall end = 0.005 < $400 / f_y$ [Satisfactory]

HENCE BOUNDARY ZONE DETAIL REQUIREMENTS ARE NOT NECESSARY AND OMIT THE CALCULATIONS BELOW.

The boundary element length = MAX(c - 0.1L , 0.5 c) = 3.37 in. (ACI 318-14 18.10.6.4)

The maximum hoop spacing = MIN[B/4 , $6d_b$, 6 , $4+(14-h_x)/3$] = 8 in.o.c. (ACI 318-14 18.10.6.2 & 18.10.6.5)

$A_{sh,\ B\ DIR} = (0.09\ s\ h_c\ f_c')\ /\ f_{yh}$ = N/A in^2.

$A_{sh,\ L\ DIR} = (0.09\ s\ h_c\ f_c')\ /\ f_{yh}$ = N/A in^2.

THANG LE & ASSOCIATES TLA STRUCTURAL ENGINEERS

PROJECT :
CLIENT :
JOB NO. : DATE :

PAGE :
DESIGN BY :
REVIEW BY :

Special Reinforced Concrete Shear Wall Design Based on ACI 318-14 & 2016 CBC Chapter A — EW4

INPUT DATA

CONCRETE STRENGTH (ACI 318 19.2.1.1)	f_c' =	4	ksi, (28 MPa)	
REBAR YIELD STRESS	f_y =	60	ksi, (414 MPa)	
FACTORED AXIAL LOAD	P_u =	79	kips, (351 kN)	
FACTORED MOMENT LOAD	M_u =	126	ft-kips, (171 kN-m)	
FACTORED SHEAR LOAD	V_u =	17.3	kips, (77 kN)	
LENGTH OF SHEAR WALL	L =	5.5	ft, (1.68 m)	
THICKNESS OF WALL	t =	8	in, (203 mm)	
DEPTH AT FLANGE	D =	8	in, (203 mm)	
WIDTH AT FLANGE	B =	8	in, (203 mm)	
TOTAL WALL HEIGHT TO TOP	h_w =	13	ft, (3.96 m)	
REINF. BARS AT BULB		1	# 5	
WALL DIST. HORIZ. REINF.	1	#	4 @ 10	in, (254 mm) o.c.
WALL DIST. VERT. REINF.	1	#	5 @ 12	in, (305 mm) o.c.
HOOP REINF - WIDTH, B, DIR.	2	legs of #	4	
HOOP REINF - LENGTH DIR.	2	legs of #	4	
WALL EFFECTIVELY CONTINUOUS ?			Yes	(ACI 18.10.6.2 apply)

DESIGN SUMMARY

SHEAR WALL LENGTH	L =	5.50	ft, (1.68 m)		
SHEAR WALL THICKNESS	t =	8.00	in, (203 mm)		
END REINFORCING	1	# 5			
WALL HORIZ. REINF	1 #	4	@	10	in. (254 mm), o.c.
WALL VERT. REINF	1 #	5	@	12	in. (305 mm), o.c.
HOOP REINF - WIDTH, B, DIR.					
HOOP REINF - LENGTH DIR.					

THE WALL DESIGN IS ADEQUATE

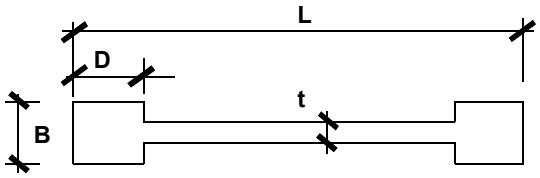

ANALYSIS

DETERMINE WHETHER THE WALL CAN RESIST SEISMIC LOADS (2016 CBC 1905A)

Pu = 79 k < 0.35 A_g f_c' = 739 k [Satisfactory]

where A_g = 528 in^2.

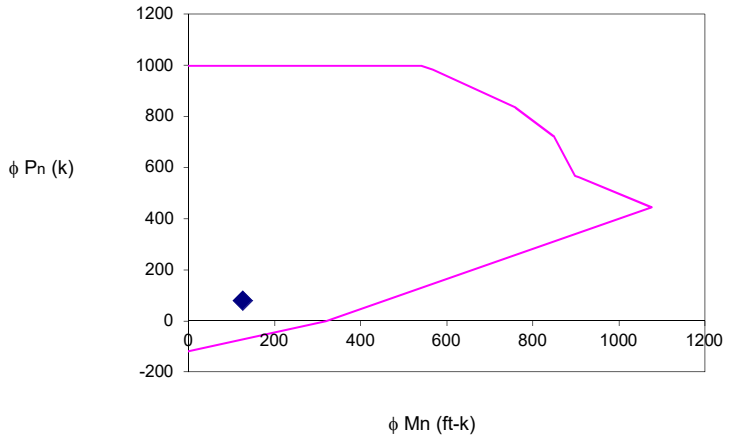

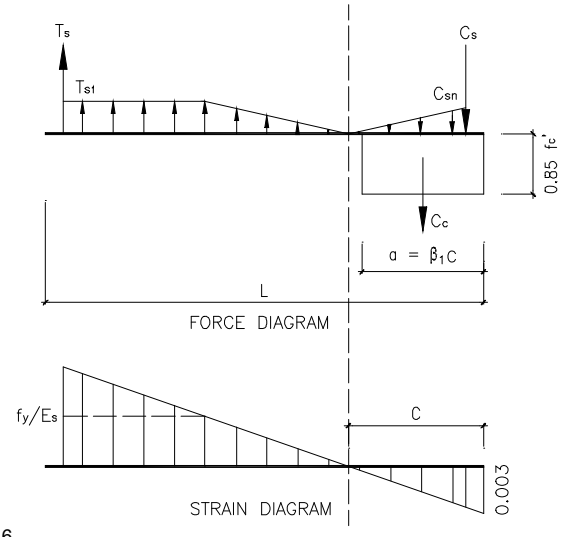

CHECK MINIMUM REINFORCEMENT RATIOS AND SPACING (ACI 318-14 18.10.2.1 & 11.6. . ,

$(\rho_t)_{min.}$ = 0.0020 [for $A_{cv}(f_c')^{0.5}$ = 33.39 kips > Vu , and bar size # 4 horizontal]

$(\rho_l)_{min.}$ = 0.0012 [for $A_{cv}(f_c')^{0.5}$ = 33.39 kips > Vu , and bar size # 5 vertical]

$(\rho_t)_{provd.}$ = 0.0025 > $(\rho_t)_{min.}$ [Satisfactory]

$(\rho_l)_{provd.}$ = 0.0032 > $(\rho_l)_{min.}$ [Satisfactory]

where A_{cv} = 528 in^2 (gross area of concrete section bounded by web thickness and length in the shear direction)

The proposed spacing is less than the maximum permissible value of 18 in and is satisfactory. Since wall V_u < $2 A_{cv}(f_c')^{0.5}$, one curtain reinforcement required. (ACI 318-14 18.10.2.2)

CHECK SHEAR CAPACITY (ACI 318-14 18.10.4.1 & 18.10.4.4)

ϕV_n =MIN [$\phi A_{cv}(\alpha_c (f_c')^{0.5} + \rho_t f_y)$, $\phi 8 A_{cv}(f_c')^{0.5}$] = 87.59 kips > V_u [Satisfactory]

where ϕ = 0.60 (conservatively, ACI 318-14 21.2)

α_c = 2.0 (for h_w / L = 2.36 > 2)

ρ_l > ρ_t [Satisfactory] (only for h_w / L > 2.0, ACI 318-14 18.10.4.3)

(cont'd)

CHECK FLEXURAL & AXIAL CAPACITY

MAXIMUM DESIGN AXIAL LOAD STRENGTH (ACI 318-14 18 & 22.4)

$\phi P_{max} = 0.8\ \phi\ [\ 0.85\ f_c'\ (A_g - A_{st}) + f_y A_{st}]$ = 998.89 kips. > P_u [Satisfactory]

where ϕ = 0.65 (ACI 318-14 21.2)

A_{st} = 2.22 in^2.

DESIGN MOMENT CAPACITY AT MAXIMUM AXIAL LOAD STRENGTH ARE FROM 0 TO 541 ft-kips.

FOR THE BALANCED STRAIN CONDITION UNDER COMBINED FLEXURE AND AXIAL LOAD, THE MAXIMUM STRAIN IN THE CONCRETE AND IN THE TENSION REINFORCEMENT MUST SIMULTANEOUSLY REACH THE VALUES SPECIFIED IN ACI 318-14 21.2.2

AS ε_c = 0.003 AND $\varepsilon_t = f_y / E_s$ = 0.002069 . THE DEPTH TO THE NEUTRAL AXIS AND EQUIVALENT RECTANGULAR CONCRETE STRESS BLOCK ARE GIVEN BY

$C_b = d\ \varepsilon_c / (\varepsilon_c + \varepsilon_s)$ = 37 in $a = C_b\ \beta_1$ = 31 in β_1 = 0.85 (ACI 318-14 22.2.2.4.3)

$\phi = 0.65 + (\varepsilon_t - 0.002)(250/3)$ = 0.656 (ACI 318-14 21.2) d = (L - 0.5D) = 62 in

DESIGN AXIAL AND MOMENT CAPACITIES AT THE BALANCED STRAIN CONDITION ARE 563 kips AND 907 ft-kips.

IN ACCORDANCE WITH ACI 318-14 21.2 THE DESIGN MOMENT CAPACITY WITHOUT AXIAL LOAD IS

$\phi M_n = 0.9\ M_n$ = 320 kips.

TO KEEP TENSION SECTION WITH SHEAR CAPACITY PER ACI 11.5.4.6, THE PURE AXIAL TENSION CAPACITY IS

$-\phi P_n = -0.9\ MIN(A_{st} F_y\ ,\ 3.3\ f_c'^{0.5}\ 4\ L\ t\ )$ = -120 kips.

SUMMARY OF LOAD VERSUS MOMENT CAPACITIES ARE SHOWN IN THE TABLE BELOW, AND THEY ARE PLOTTED ON THE INTERACTION DIAGRAM AT FRONT PAGE.

		ϕP_n (kips)	ϕM_n (ft-kips)
AT AXIAL LOAD ONLY	=	999	0
AT MAXIMUM LOAD	=	999	541
AT 0 % TENSION	=	983	567
AT 25 % TENSION	=	835	760
AT 50 % TENSION	=	722	849
AT ε_t = 0.002	=	567	899
AT BALANCED CONDITION	=	563	907
AT ε_t = 0.005	=	445	1076
AT FLEXURE ONLY	=	0	320
AT TENSION ONLY	=	-120	0

DESIGN FORCES P_u & M_u ARE ALSO PLOTTED ON THE INTERACTION DIAGRAM. FROM THE INTERACTION DIAGRAM.

THE ALLOWABLE MOMENT AT AN AXIAL LOAD P_u IS GIVEN BY

ϕM_n = 499 kips. > M_u [Satisfactory]

where $\phi = Min\{0.9, Max[0.65 + (\varepsilon_t - 0.002)(250/3)\ ,\ 0.65]\}$ = 0.900 (ACI 318-14 21.2)

CHECK BOUNDARY ZONE REQUIREMENTS

AN EXEMPTION FROM THE PROVISION OF BOUNDARY ZONE CONFINEMENT REINFORCEMENT IS GIVEN BY ACI 318-14 18.10.6.2, 18.10.6.3, and 18.10.6.5(a) PROVIDED THAT

$c < (L\ h_w) / 1.5(600\ \delta_u)$ for ACI 21.9.6.2 apply or $f_c < 0.2\ f_c'$ for ACI 18.10.6.3 apply [Satisfactory]

where c = 8 in. (distance from the extreme compression fiber to neutral axis at P_u & M_n loads.)

δ_u = 0.8 in. (design displacement, assume $0.005h_w$ as a conservative short cut, see ACI 318-14 18.10.6.2.)

$f_c = (P_u / A) + (M_u\ y / I)$ = 0.397 ksi. (the maximum extreme fiber compressive stress at P_u & M_u loads.)

y = 33 in. (distance from the extreme compression fiber to neutral axis at P_u & M_u loads.)

A = 546 in^2. (area of transformed section.)

I = 198152 in^4. (moment of inertia of transformed section.)

Or the longitudinal reinforcement ratio at the wall end = 0.005 < $400 / f_y$ [Satisfactory]

HENCE BOUNDARY ZONE DETAIL REQUIREMENTS ARE NOT NECESSARY AND OMIT THE CALCULATIONS BELOW.

The boundary element length = MAX(c - 0.1L , 0.5 c) = 4.10 in. (ACI 318-14 18.10.6.4)

The maximum hoop spacing = MIN[B/4 , $6d_b$, 6 , $4+(14-h_x)/3$] = 8 in.o.c. (ACI 318-14 18.10.6.2 & 18.10.6.5)

$A_{sh,\ B\ DIR} = (0.09\ s\ h_c\ f_c'\ ) / f_{yh}$ = N/A in^2.

$A_{sh,\ L\ DIR} = (0.09\ s\ h_c\ f_c'\ ) / f_{yh}$ = N/A in^2.

THANG LE & ASSOCIATES TLA STRUCTURAL ENGINEERS

PROJECT :
CLIENT :
JOB NO. : DATE :

PAGE :
DESIGN BY :
REVIEW BY :

Special Reinforced Concrete Shear Wall Design Based on ACI 318-14 & 2016 CBC Chapter A — EW5

INPUT DATA

CONCRETE STRENGTH (ACI 318 19.2.1.1)	f_c' =	4	ksi, (28 MPa)	
REBAR YIELD STRESS	f_y =	60	ksi, (414 MPa)	
FACTORED AXIAL LOAD	P_u =	64	kips, (285 kN)	
FACTORED MOMENT LOAD	M_u =	146	ft-kips, (198 kN-m)	
FACTORED SHEAR LOAD	V_u =	12.3	kips, (55 kN)	
LENGTH OF SHEAR WALL	L =	6	ft, (1.83 m)	
THICKNESS OF WALL	t =	8	in, (203 mm)	
DEPTH AT FLANGE	D =	8	in, (203 mm)	
WIDTH AT FLANGE	B =	8	in, (203 mm)	
TOTAL WALL HEIGHT TO TOP	h_w =	13	ft, (3.96 m)	
REINF. BARS AT BULB		1 # 5		
WALL DIST. HORIZ. REINF.		1 # 4 @ 10	in, (254 mm) o.c.	
WALL DIST. VERT. REINF.		1 # 5 @ 12	in, (305 mm) o.c.	
HOOP REINF - WIDTH, B, DIR.		2 legs of # 4		
HOOP REINF - LENGTH DIR.		2 legs of # 4		
WALL EFFECTIVELY CONTINUOUS ?		Yes	(ACI 18.10.6.2 apply)	

DESIGN SUMMARY

SHEAR WALL LENGTH	L =	6.00	ft, (1.83 m)	
SHEAR WALL THICKNESS	t =	8.00	in, (203 mm)	
END REINFORCING	1 # 5			
WALL HORIZ. REINF	1 # 4 @ 10		in. (254 mm), o.c.	
WALL VERT. REINF	1 # 5 @ 12		in. (305 mm), o.c.	
HOOP REINF - WIDTH, B, DIR.				
HOOP REINF - LENGTH DIR.				

THE WALL DESIGN IS ADEQUATE

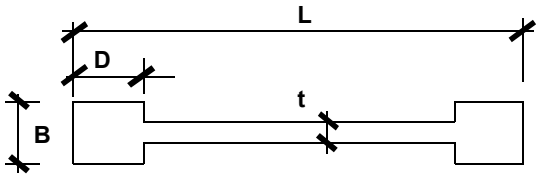

ANALYSIS

DETERMINE WHETHER THE WALL CAN RESIST SEISMIC LOADS (2016 CBC 1905A)

Pu = 64 k < 0.35 A_g f_c' = 806 k [Satisfactory]

where A_g = 576 in^2.

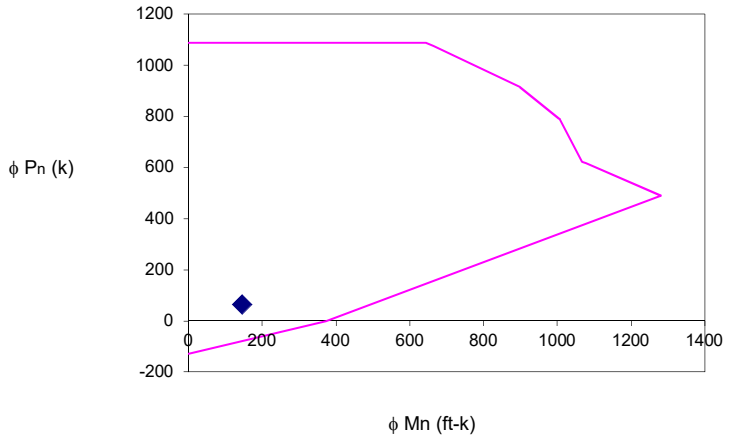

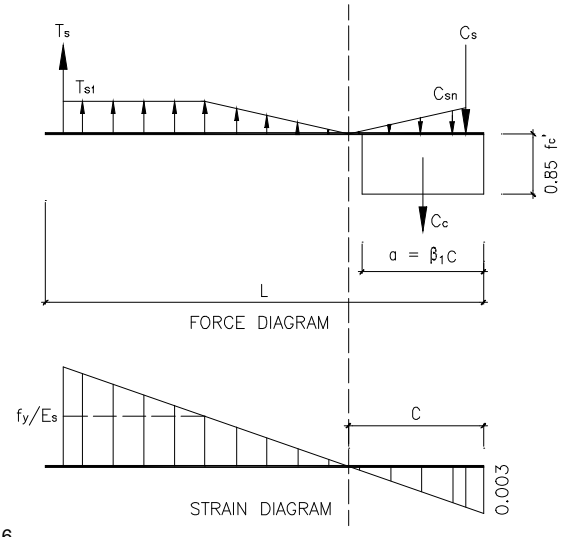

CHECK MINIMUM REINFORCEMENT RATIOS AND SPACING (ACI 318-14 18.10.2.1 & 11.6. . ,

$(\rho_t)_{min.}$ = 0.0020 [for $A_{cv}(f_c')^{0.5}$ = 36.43 kips > Vu , and bar size # 4 horizontal]

$(\rho_l)_{min.}$ = 0.0012 [for $A_{cv}(f_c')^{0.5}$ = 36.43 kips > Vu , and bar size # 5 vertical]

$(\rho_t)_{provd.}$ = 0.0025 > $(\rho_t)_{min.}$ [Satisfactory]

$(\rho_l)_{provd.}$ = 0.0032 > $(\rho_l)_{min.}$ [Satisfactory]

where A_{cv} = 576 in^2 (gross area of concrete section bounded by web thickness and length in the shear direction)

The proposed spacing is less than the maximum permissible value of 18 in and is satisfactory. Since wall V_u < $2 A_{cv}(f_c')^{0.5}$, one curtain reinforcement required. (ACI 318-14 18.10.2.2)

CHECK SHEAR CAPACITY (ACI 318-14 18.10.4.1 & 18.10.4.4)

ϕV_n =MIN [$\phi A_{cv}(\alpha_c (f_c')^{0.5} + \rho_t f_y)$, $\phi 8 A_{cv}(f_c')^{0.5}$] = 95.56 kips > V_u [Satisfactory]

where ϕ = 0.60 (conservatively, ACI 318-14 21.2)

α_c = 2.0 (for h_w / L = 2.17 > 2)

ρ_l > ρ_t [Satisfactory] (only for h_w / L > 2.0, ACI 318-14 18.10.4.3)

(cont'd)

CHECK FLEXURAL & AXIAL CAPACITY

MAXIMUM DESIGN AXIAL LOAD STRENGTH (ACI 318-14 18 & 22.4)

$\phi P_{max} = 0.8\ \phi\ [\ 0.85\ f_c'\ (A_g - A_{st}) + f_y A_{st}]$ = 1088.3 kips. > P_u [Satisfactory]

where ϕ = 0.65 (ACI 318-14 21.2)

A_{st} = 2.38 in^2.

DESIGN MOMENT CAPACITY AT MAXIMUM AXIAL LOAD STRENGTH ARE FROM 0 TO 643 ft-kips.

FOR THE BALANCED STRAIN CONDITION UNDER COMBINED FLEXURE AND AXIAL LOAD, THE MAXIMUM STRAIN IN THE CONCRETE AND IN THE TENSION REINFORCEMENT MUST SIMULTANEOUSLY REACH THE VALUES SPECIFIED IN ACI 318-14 21.2.2

AS ε_c = 0.003 AND $\varepsilon_t = f_y / E_s$ = 0.002069 . THE DEPTH TO THE NEUTRAL AXIS AND EQUIVALENT RECTANGULAR CONCRETE STRESS BLOCK ARE GIVEN BY

$C_b = d\ \varepsilon_c / (\varepsilon_c + \varepsilon_s)$ = 40 in $a = C_b\ \beta_1$ = 34 in β_1 = 0.85 (ACI 318-14 22.2.2.4.3)

$\phi = 0.65 + (\varepsilon_t - 0.002)(250/3)$ = 0.656 (ACI 318-14 21.2) d = (L - 0.5D) = 68 in

DESIGN AXIAL AND MOMENT CAPACITIES AT THE BALANCED STRAIN CONDITION ARE 618 kips AND 1078 ft-kips.

IN ACCORDANCE WITH ACI 318-14 21.2 THE DESIGN MOMENT CAPACITY WITHOUT AXIAL LOAD IS

$\phi M_n = 0.9\ M_n$ = 373 kips.

TO KEEP TENSION SECTION WITH SHEAR CAPACITY PER ACI 11.5.4.6, THE PURE AXIAL TENSION CAPACITY IS

$-\phi P_n = -0.9\ MIN(A_{st} F_y\ ,\ 3.3\ f_c'^{0.5}\ 4\ L\ t\ )$ = -128 kips.

SUMMARY OF LOAD VERSUS MOMENT CAPACITIES ARE SHOWN IN THE TABLE BELOW, AND THEY ARE PLOTTED ON THE INTERACTION DIAGRAM AT FRONT PAGE.

		ϕP_n (kips)	ϕM_n (ft-kips)
AT AXIAL LOAD ONLY	=	1088	0
AT MAXIMUM LOAD	=	1088	643
AT 0 % TENSION	=	1076	664
AT 25 % TENSION	=	915	898
AT 50 % TENSION	=	791	1007
AT ε_t = 0.002	=	622	1067
AT BALANCED CONDITION	=	618	1078
AT ε_t = 0.005	=	490	1281
AT FLEXURE ONLY	=	0	373
AT TENSION ONLY	=	-128	0

DESIGN FORCES P_u & M_u ARE ALSO PLOTTED ON THE INTERACTION DIAGRAM. FROM THE INTERACTION DIAGRAM.

THE ALLOWABLE MOMENT AT AN AXIAL LOAD P_u IS GIVEN BY

ϕM_n = 534 kips. > M_u [Satisfactory]

where $\phi = Min\{0.9, Max[0.65 + (\varepsilon_t - 0.002)(250/3)\ ,\ 0.65]\}$ = 0.900 (ACI 318-14 21.2)

CHECK BOUNDARY ZONE REQUIREMENTS

AN EXEMPTION FROM THE PROVISION OF BOUNDARY ZONE CONFINEMENT REINFORCEMENT IS GIVEN BY ACI 318-14 18.10.6.2, 18.10.6.3, and 18.10.6.5(a) PROVIDED THAT

$c < (L\ h_w) / 1.5(600\ \delta_u)$ for ACI 21.9.6.2 apply or $f_c < 0.2\ f_c'$ for ACI 18.10.6.3 apply [Satisfactory]

where c = 8 in. (distance from the extreme compression fiber to neutral axis at P_u & M_n loads.)

δ_u = 0.8 in. (design displacement, assume $0.005h_w$ as a conservative short cut, see ACI 318-14 18.10.6.2.)

$f_c = (P_u / A) + (M_u\ y / I)$ = 0.353 ksi. (the maximum extreme fiber compressive stress at P_u & M_u loads.)

y = 36 in. (distance from the extreme compression fiber to neutral axis at P_u & M_u loads.)

A = 595 in^2. (area of transformed section.)

I = 257091 in^4. (moment of inertia of transformed section.)

Or the longitudinal reinforcement ratio at the wall end = 0.005 < $400 / f_y$ [Satisfactory]

HENCE BOUNDARY ZONE DETAIL REQUIREMENTS ARE NOT NECESSARY AND OMIT THE CALCULATIONS BELOW.

The boundary element length = MAX(c - 0.1L , 0.5 c) = 3.97 in. (ACI 318-14 18.10.6.4)

The maximum hoop spacing = MIN[B/4 , $6d_b$, 6 , $4+(14-h_x)/3$] = 8 in.o.c. (ACI 318-14 18.10.6.2 & 18.10.6.5)

$A_{sh,\ B\ DIR} = (0.09\ s\ h_c\ f_c')\ /\ f_{yh}$ = N/A in^2.

$A_{sh,\ L\ DIR} = (0.09\ s\ h_c\ f_c')\ /\ f_{yh}$ = N/A in^2.

THANG LE & ASSOCIATES TLA STRUCTURAL ENGINEERS

PROJECT :
CLIENT :
JOB NO. : DATE :

PAGE :
DESIGN BY :
REVIEW BY :

Special Reinforced Concrete Shear Wall Design Based on ACI 318-14 & 2016 CBC Chapter A — EW6

INPUT DATA

CONCRETE STRENGTH (ACI 318 19.2.1.1)	f_c' =	4	ksi, (28 MPa)	
REBAR YIELD STRESS	f_y =	60	ksi, (414 MPa)	
FACTORED AXIAL LOAD	P_u =	43	kips, (191 kN)	
FACTORED MOMENT LOAD	M_u =	280	ft-kips, (380 kN-m)	
FACTORED SHEAR LOAD	V_u =	27.2	kips, (121 kN)	
LENGTH OF SHEAR WALL	L =	6	ft, (1.83 m)	
THICKNESS OF WALL	t =	8	in, (203 mm)	
DEPTH AT FLANGE	D =	8	in, (203 mm)	
WIDTH AT FLANGE	B =	8	in, (203 mm)	
TOTAL WALL HEIGHT TO TOP	h_w =	13	ft, (3.96 m)	
REINF. BARS AT BULB		1	# 5	
WALL DIST. HORIZ. REINF.	1	#	4 @ 10	in, (254 mm) o.c.
WALL DIST. VERT. REINF.	1	#	5 @ 12	in, (305 mm) o.c.
HOOP REINF - WIDTH, B, DIR.	2	legs of #	4	
HOOP REINF - LENGTH DIR.	2	legs of #	4	
WALL EFFECTIVELY CONTINUOUS ?			Yes	(ACI 18.10.6.2 apply)

DESIGN SUMMARY

SHEAR WALL LENGTH	L =	6.00	ft, (1.83 m)	
SHEAR WALL THICKNESS	t =	8.00	in, (203 mm)	
END REINFORCING	1	# 5		
WALL HORIZ. REINF	1 #	4 @	10	in. (254 mm), o.c.
WALL VERT. REINF	1 #	5 @	12	in. (305 mm), o.c.
HOOP REINF - WIDTH, B, DIR.				
HOOP REINF - LENGTH DIR.				

THE WALL DESIGN IS ADEQUATE

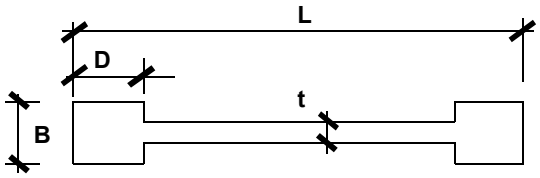

ANALYSIS

DETERMINE WHETHER THE WALL CAN RESIST SEISMIC LOADS (2016 CBC 1905A)

Pu = 43 k < 0.35 A_g f_c' = 806 k [Satisfactory]

where A_g = 576 in^2.

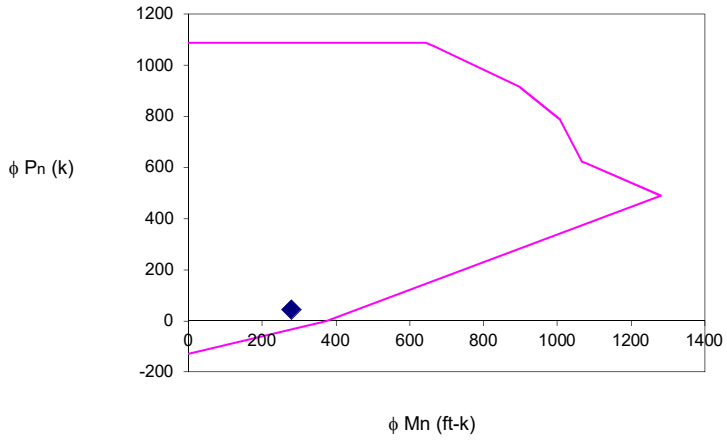

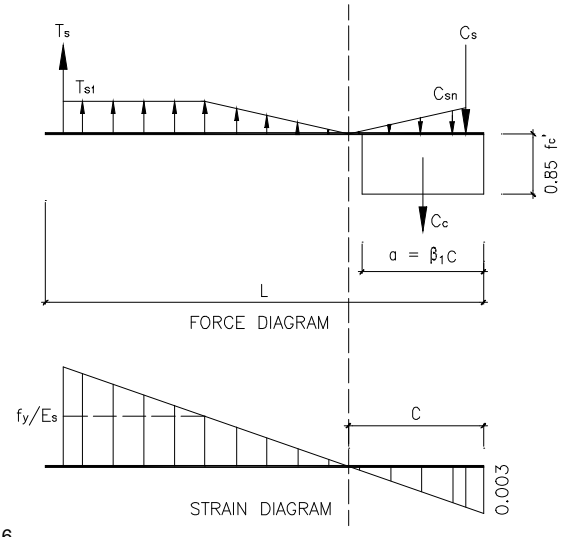

CHECK MINIMUM REINFORCEMENT RATIOS AND SPACING (ACI 318-14 18.10.2.1 & 11.6. . ,

$(\rho_t)_{min.}$ = 0.0020 [for $A_{cv}(f_c')^{0.5}$ = 36.43 kips > Vu , and bar size # 4 horizontal]

$(\rho_l)_{min.}$ = 0.0012 [for $A_{cv}(f_c')^{0.5}$ = 36.43 kips > Vu , and bar size # 5 vertical]

$(\rho_t)_{provd.}$ = 0.0025 > $(\rho_t)_{min.}$ [Satisfactory]

$(\rho_l)_{provd.}$ = 0.0032 > $(\rho_l)_{min.}$ [Satisfactory]

where A_{cv} = 576 in^2 (gross area of concrete section bounded by web thickness and length in the shear direction)

The proposed spacing is less than the maximum permissible value of 18 in and is satisfactory. Since wall V_u < $2 A_{cv}(f_c')^{0.5}$, one curtain reinforcement required. (ACI 318-14 18.10.2.2)

CHECK SHEAR CAPACITY (ACI 318-14 18.10.4.1 & 18.10.4.4)

ϕV_n =MIN [$\phi A_{cv}(\alpha_c (f_c')^{0.5} + \rho_t f_y)$, $\phi 8 A_{cv}(f_c')^{0.5}$] = 95.56 kips > V_u [Satisfactory]

where ϕ = 0.60 (conservatively, ACI 318-14 21.2)

α_c = 2.0 (for h_w / L = 2.17 > 2)

ρ_l > ρ_t [Satisfactory] (only for h_w / L > 2.0, ACI 318-14 18.10.4.3)

(cont'd)

CHECK FLEXURAL & AXIAL CAPACITY

MAXIMUM DESIGN AXIAL LOAD STRENGTH (ACI 318-14 18 & 22.4)

$\phi P_{max} = 0.8\ \phi\ [\ 0.85\ f_c'\ (A_g - A_{st}) + f_y A_{st}]$ = 1088.3 kips. > P_u [Satisfactory]

where ϕ = 0.65 (ACI 318-14 21.2)

A_{st} = 2.38 in^2.

DESIGN MOMENT CAPACITY AT MAXIMUM AXIAL LOAD STRENGTH ARE FROM 0 TO 643 ft-kips.

FOR THE BALANCED STRAIN CONDITION UNDER COMBINED FLEXURE AND AXIAL LOAD, THE MAXIMUM STRAIN IN THE CONCRETE AND IN THE TENSION REINFORCEMENT MUST SIMULTANEOUSLY REACH THE VALUES SPECIFIED IN ACI 318-14 21.2.2

AS ε_c = 0.003 AND $\varepsilon_t = f_y / E_s$ = 0.002069 . THE DEPTH TO THE NEUTRAL AXIS AND EQUIVALENT RECTANGULAR CONCRETE STRESS BLOCK ARE GIVEN BY

$C_b = d\ \varepsilon_c / (\varepsilon_c + \varepsilon_s)$ = 40 in $a = C_b\ \beta_1$ = 34 in β_1 = 0.85 (ACI 318-14 22.2.2.4.3)

$\phi = 0.65 + (\varepsilon_t - 0.002)(250/3)$ = 0.656 (ACI 318-14 21.2) d = (L - 0.5D) = 68 in

DESIGN AXIAL AND MOMENT CAPACITIES AT THE BALANCED STRAIN CONDITION ARE 618 kips AND 1078 ft-kips.

IN ACCORDANCE WITH ACI 318-14 21.2 THE DESIGN MOMENT CAPACITY WITHOUT AXIAL LOAD IS

$\phi M_n = 0.9\ M_n$ = 373 kips.

TO KEEP TENSION SECTION WITH SHEAR CAPACITY PER ACI 11.5.4.6, THE PURE AXIAL TENSION CAPACITY IS

$-\phi P_n = -0.9\ MIN(A_{st} F_y\ ,\ 3.3\ f_c'^{0.5}\ 4\ L\ t\ )$ = -128 kips.

SUMMARY OF LOAD VERSUS MOMENT CAPACITIES ARE SHOWN IN THE TABLE BELOW, AND THEY ARE PLOTTED ON THE INTERACTION DIAGRAM AT FRONT PAGE.

		ϕP_n (kips)	ϕM_n (ft-kips)
AT AXIAL LOAD ONLY	=	1088	0
AT MAXIMUM LOAD	=	1088	643
AT 0 % TENSION	=	1076	664
AT 25 % TENSION	=	915	898
AT 50 % TENSION	=	791	1007
AT ε_t = 0.002	=	622	1067
AT BALANCED CONDITION	=	618	1078
AT ε_t = 0.005	=	490	1281
AT FLEXURE ONLY	=	0	373
AT TENSION ONLY	=	-128	0

DESIGN FORCES P_u & M_u ARE ALSO PLOTTED ON THE INTERACTION DIAGRAM. FROM THE INTERACTION DIAGRAM.

THE ALLOWABLE MOMENT AT AN AXIAL LOAD P_u IS GIVEN BY

ϕM_n = 482 kips. > M_u [Satisfactory]

where $\phi = Min\{0.9, Max[0.65 + (\varepsilon_t - 0.002)(250/3)\ ,\ 0.65]\}$ = 0.900 (ACI 318-14 21.2)

CHECK BOUNDARY ZONE REQUIREMENTS

AN EXEMPTION FROM THE PROVISION OF BOUNDARY ZONE CONFINEMENT REINFORCEMENT IS GIVEN BY ACI 318-14 18.10.6.2, 18.10.6.3, and 18.10.6.5(a) PROVIDED THAT

$c < (L\ h_w) / 1.5(600\ \delta_u)$ for ACI 21.9.6.2 apply or $f_c < 0.2\ f_c'$ for ACI 18.10.6.3 apply [Satisfactory]

where c = 7 in. (distance from the extreme compression fiber to neutral axis at P_u & M_n loads.)

δ_u = 0.8 in. (design displacement, assume $0.005h_w$ as a conservative short cut, see ACI 318-14 18.10.6.2.)

$f_c = (P_u / A) + (M_u\ y / I)$ = 0.543 ksi. (the maximum extreme fiber compressive stress at P_u & M_u loads.)

y = 36 in. (distance from the extreme compression fiber to neutral axis at P_u & M_u loads.)

A = 595 in^2. (area of transformed section.)

I = 257091 in^4. (moment of inertia of transformed section.)

Or the longitudinal reinforcement ratio at the wall end = 0.005 < $400 / f_y$ [Satisfactory]

HENCE BOUNDARY ZONE DETAIL REQUIREMENTS ARE NOT NECESSARY AND OMIT THE CALCULATIONS BELOW.

The boundary element length = MAX(c - 0.1L , 0.5 c) = 3.56 in. (ACI 318-14 18.10.6.4)

The maximum hoop spacing = MIN[B/4 , $6d_b$, 6 , $4+(14-h_x)/3$] = 8 in.o.c. (ACI 318-14 18.10.6.2 & 18.10.6.5)

$A_{sh,\ B\ DIR} = (0.09\ s\ h_c\ f_c')\ /\ f_{yh}$ = N/A in^2.

$A_{sh,\ L\ DIR} = (0.09\ s\ h_c\ f_c')\ /\ f_{yh}$ = N/A in^2.

THANG LE & ASSOCIATES TLA STRUCTURAL ENGINEERS

PROJECT :
CLIENT :
JOB NO. : DATE :

PAGE :
DESIGN BY :
REVIEW BY :

Special Reinforced Concrete Shear Wall Design Based on ACI 318-14 & 2016 CBC Chapter A — EW7

INPUT DATA

CONCRETE STRENGTH (ACI 318 19.2.1.1)	f_c' =	4	ksi, (28 MPa)	
REBAR YIELD STRESS	f_y =	60	ksi, (414 MPa)	
FACTORED AXIAL LOAD	P_u =	106	kips, (472 kN)	
FACTORED MOMENT LOAD	M_u =	155	ft-kips, (210 kN-m)	
FACTORED SHEAR LOAD	V_u =	27.2	kips, (121 kN)	
LENGTH OF SHEAR WALL	L =	5	ft, (1.52 m)	
THICKNESS OF WALL	t =	8	in, (203 mm)	
DEPTH AT FLANGE	D =	8	in, (203 mm)	
WIDTH AT FLANGE	B =	8	in, (203 mm)	
TOTAL WALL HEIGHT TO TOP	h_w =	13	ft, (3.96 m)	
REINF. BARS AT BULB		1	# 5	
WALL DIST. HORIZ. REINF.	1	#	4 @ 10	in, (254 mm) o.c.
WALL DIST. VERT. REINF.	1	#	5 @ 12	in, (305 mm) o.c.
HOOP REINF - WIDTH, B, DIR.	1	legs of #	4	
HOOP REINF - LENGTH DIR.	1	legs of #	4	
WALL EFFECTIVELY CONTINUOUS ?			Yes	(ACI 18.10.6.2 apply)

DESIGN SUMMARY

SHEAR WALL LENGTH	L =	5.00	ft, (1.52 m)	
SHEAR WALL THICKNESS	t =	8.00	in, (203 mm)	
END REINFORCING	1	# 5		
WALL HORIZ. REINF	1 #	4 @	10	in. (254 mm), o.c.
WALL VERT. REINF	1 #	5 @	12	in. (305 mm), o.c.
HOOP REINF - WIDTH, B, DIR.				
HOOP REINF - LENGTH DIR.				

THE WALL DESIGN IS ADEQUATE

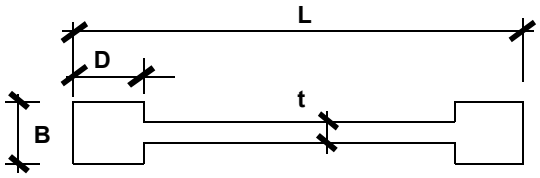

ANALYSIS

DETERMINE WHETHER THE WALL CAN RESIST SEISMIC LOADS (2016 CBC 1905A)

P_u = 106 k < $0.35\ A_g\ f_c'$ = 672 k [Satisfactory]

where A_g = 480 in^2.

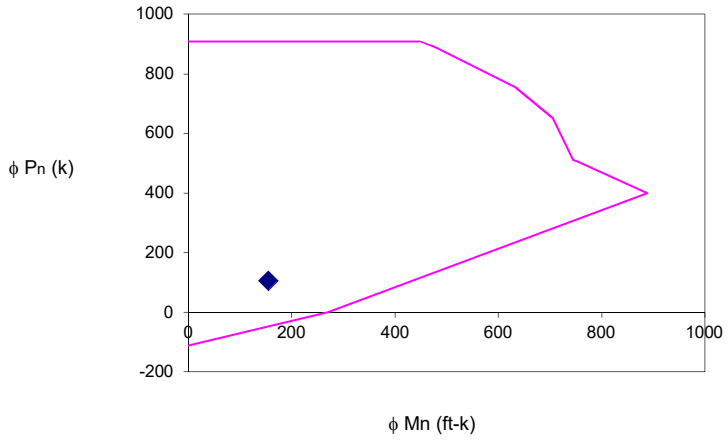

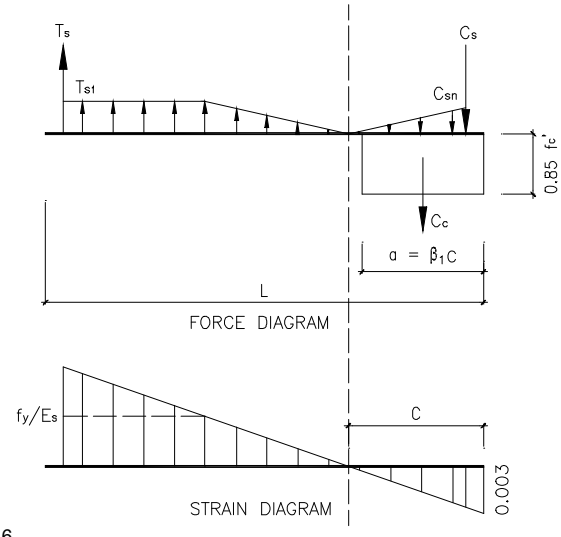

CHECK MINIMUM REINFORCEMENT RATIOS AND SPACING (ACI 318-14 18.10.2.1 & 11.6. . ,

$(\rho_t)_{min.}$ = 0.0020 [for $A_{cv}(f_c')^{0.5}$ = 30.36 kips > Vu , and bar size # 4 horizontal]

$(\rho_l)_{min.}$ = 0.0012 [for $A_{cv}(f_c')^{0.5}$ = 30.36 kips > Vu , and bar size # 5 vertical]

$(\rho_t)_{provd.}$ = 0.0025 > $(\rho_t)_{min.}$ [Satisfactory]

$(\rho_l)_{provd.}$ = 0.0032 > $(\rho_l)_{min.}$ [Satisfactory]

where A_{cv} = 480 in^2 (gross area of concrete section bounded by web thickness and length in the shear direction)

The proposed spacing is less than the maximum permissible value of 18 in and is satisfactory. Since wall V_u < $2\ A_{cv}(f_c')^{0.5}$, one curtain reinforcement required. (ACI 318-14 18.10.2.2)

CHECK SHEAR CAPACITY (ACI 318-14 18.10.4.1 & 18.10.4.4)

ϕV_n =MIN [$\phi\ A_{cv}(\alpha_c(f_c')^{0.5} + \rho_t f_y)$, $\phi\ 8\ A_{cv}(f_c')^{0.5}$] = 79.63 kips > V_u [Satisfactory]

where ϕ = 0.60 (conservatively, ACI 318-14 21.2)

α_c = 2.0 (for h_w / L = 2.60 > 2)

ρ_l > ρ_t [Satisfactory] (only for h_w / L > 2.0, ACI 318-14 18.10.4.3)

(cont'd)

CHECK FLEXURAL & AXIAL CAPACITY

MAXIMUM DESIGN AXIAL LOAD STRENGTH (ACI 318-14 18 & 22.4)

$\phi P_{max} = 0.8\ \phi\ [\ 0.85\ f_c'\ (A_g - A_{st}) + f_y A_{st}]$ = 909.47 kips. > P_u [Satisfactory]

where ϕ = 0.65 (ACI 318-14 21.2)

A_{st} = 2.07 in^2.

DESIGN MOMENT CAPACITY AT MAXIMUM AXIAL LOAD STRENGTH ARE FROM 0 TO 448 ft-kips.

FOR THE BALANCED STRAIN CONDITION UNDER COMBINED FLEXURE AND AXIAL LOAD, THE MAXIMUM STRAIN IN THE CONCRETE AND IN THE TENSION REINFORCEMENT MUST SIMULTANEOUSLY REACH THE VALUES SPECIFIED IN ACI 318-14 21.2.2

AS ε_c = 0.003 AND $\varepsilon_t = f_y / E_s$ = 0.002069 . THE DEPTH TO THE NEUTRAL AXIS AND EQUIVALENT RECTANGULAR CONCRETE STRESS BLOCK ARE GIVEN BY

$C_b = d\ \varepsilon_c / (\varepsilon_c + \varepsilon_s)$ = 33 in $a = C_b\ \beta_1$ = 28 in β_1 = 0.85 (ACI 318-14 22.2.2.4.3)

$\phi = 0.65 + (\varepsilon_t - 0.002)(250/3)$ = 0.656 (ACI 318-14 21.2) d = (L - 0.5D) = 56 in

DESIGN AXIAL AND MOMENT CAPACITIES AT THE BALANCED STRAIN CONDITION ARE 508 kips AND 752 ft-kips.

IN ACCORDANCE WITH ACI 318-14 21.2 THE DESIGN MOMENT CAPACITY WITHOUT AXIAL LOAD IS

$\phi M_n = 0.9\ M_n$ = 270 kips.

TO KEEP TENSION SECTION WITH SHEAR CAPACITY PER ACI 11.5.4.6, THE PURE AXIAL TENSION CAPACITY IS

$-\phi P_n = -0.9\ MIN(A_{st} F_y\ ,\ 3.3\ f_c'^{0.5}\ 4\ L\ t\ )$ = -112 kips.

SUMMARY OF LOAD VERSUS MOMENT CAPACITIES ARE SHOWN IN THE TABLE BELOW, AND THEY ARE PLOTTED ON THE INTERACTION DIAGRAM AT FRONT PAGE.

		ϕP_n (kips)	ϕM_n (ft-kips)
AT AXIAL LOAD ONLY	=	909	0
AT MAXIMUM LOAD	=	909	448
AT 0 % TENSION	=	889	478
AT 25 % TENSION	=	755	634
AT 50 % TENSION	=	652	705
AT ε_t = 0.002	=	512	745
AT BALANCED CONDITION	=	508	752
AT ε_t = 0.005	=	400	889
AT FLEXURE ONLY	=	0	270
AT TENSION ONLY	=	-112	0

DESIGN FORCES P_u & M_u ARE ALSO PLOTTED ON THE INTERACTION DIAGRAM. FROM THE INTERACTION DIAGRAM.

THE ALLOWABLE MOMENT AT AN AXIAL LOAD P_u IS GIVEN BY

ϕM_n = 482 kips. > M_u [Satisfactory]

where $\phi = Min\{0.9, Max[0.65 + (\varepsilon_t - 0.002)(250/3)\ ,\ 0.65]\}$ = 0.900 (ACI 318-14 21.2)

CHECK BOUNDARY ZONE REQUIREMENTS

AN EXEMPTION FROM THE PROVISION OF BOUNDARY ZONE CONFINEMENT REINFORCEMENT IS GIVEN BY ACI 318-14 18.10.6.2, 18.10.6.3, and 18.10.6.5(a) PROVIDED THAT

$c < (L\ h_w) / 1.5(600\ \delta_u)$ for ACI 21.9.6.2 apply or $f_c < 0.2\ f_c'$ for ACI 18.10.6.3 apply [Satisfactory]

where c = 9 in. (distance from the extreme compression fiber to neutral axis at P_u & M_n loads.)

δ_u = 0.8 in. (design displacement, assume $0.005h_w$ as a conservative short cut, see ACI 318-14 18.10.6.2.)

$f_c = (P_u / A) + (M_u\ y / I)$ = 0.588 ksi. (the maximum extreme fiber compressive stress at P_u & M_u loads.)

y = 30 in. (distance from the extreme compression fiber to neutral axis at P_u & M_u loads.)

A = 497 in^2. (area of transformed section.)

I = 148988 in^4. (moment of inertia of transformed section.)

Or the longitudinal reinforcement ratio at the wall end = 0.005 < $400 / f_y$ [Satisfactory]

HENCE BOUNDARY ZONE DETAIL REQUIREMENTS ARE NOT NECESSARY AND OMIT THE CALCULATIONS BELOW.

The boundary element length = MAX(c - 0.1L , 0.5 c) = 4.48 in. (ACI 318-14 18.10.6.4)

The maximum hoop spacing = MIN[B/4 , $6d_b$, 6 , $4+(14-h_x)/3$] = 8 in.o.c. (ACI 318-14 18.10.6.2 & 18.10.6.5)

$A_{sh,\ B\ DIR} = (0.09\ s\ h_c\ f_c')\ /\ f_{yh}$ = N/A in^2.

$A_{sh,\ L\ DIR} = (0.09\ s\ h_c\ f_c')\ /\ f_{yh}$ = N/A in^2.

THANG LE & ASSOCIATES TLA STRUCTURAL ENGINEERS

PROJECT :
CLIENT :
JOB NO. : DATE :

PAGE :
DESIGN BY :
REVIEW BY :

Special Reinforced Concrete Shear Wall Design Based on ACI 318-14 & 2016 CBC Chapter A — EW8

INPUT DATA

CONCRETE STRENGTH (ACI 318 19.2.1.1)	f_c' =	4	ksi, (28 MPa)	
REBAR YIELD STRESS	f_y =	60	ksi, (414 MPa)	
FACTORED AXIAL LOAD	P_u =	10.7	kips, (48 kN)	
FACTORED MOMENT LOAD	M_u =	42	ft-kips, (57 kN-m)	
FACTORED SHEAR LOAD	V_u =	4.5	kips, (20 kN)	
LENGTH OF SHEAR WALL	L =	5	ft, (1.52 m)	
THICKNESS OF WALL	t =	8	in, (203 mm)	
DEPTH AT FLANGE	D =	8	in, (203 mm)	
WIDTH AT FLANGE	B =	8	in, (203 mm)	
TOTAL WALL HEIGHT TO TOP	h_w =	13	ft, (3.96 m)	
REINF. BARS AT BULB		1 # 5		
WALL DIST. HORIZ. REINF.		1 # 4 @ 10	in, (254 mm) o.c.	
WALL DIST. VERT. REINF.		1 # 5 @ 12	in, (305 mm) o.c.	
HOOP REINF - WIDTH, B, DIR.		1 legs of # 4		
HOOP REINF - LENGTH DIR.		1 legs of # 4		
WALL EFFECTIVELY CONTINUOUS ?		Yes	(ACI 18.10.6.2 apply)	

DESIGN SUMMARY

SHEAR WALL LENGTH	L =	5.00	ft, (1.52 m)	
SHEAR WALL THICKNESS	t =	8.00	in, (203 mm)	
END REINFORCING	1 # 5			
WALL HORIZ. REINF	1 # 4 @ 10		in. (254 mm), o.c.	
WALL VERT. REINF	1 # 5 @ 12		in. (305 mm), o.c.	
HOOP REINF - WIDTH, B, DIR.				
HOOP REINF - LENGTH DIR.				

THE WALL DESIGN IS ADEQUATE

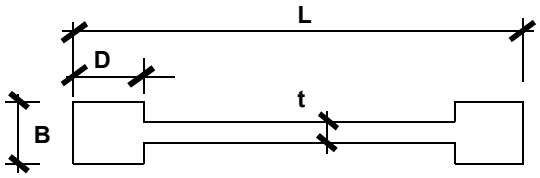

ANALYSIS

DETERMINE WHETHER THE WALL CAN RESIST SEISMIC LOADS (2016 CBC 1905A)

Pu = 10.7 k < 0.35 A_g f_c' = 672 k [Satisfactory]

where A_g = 480 in^2.

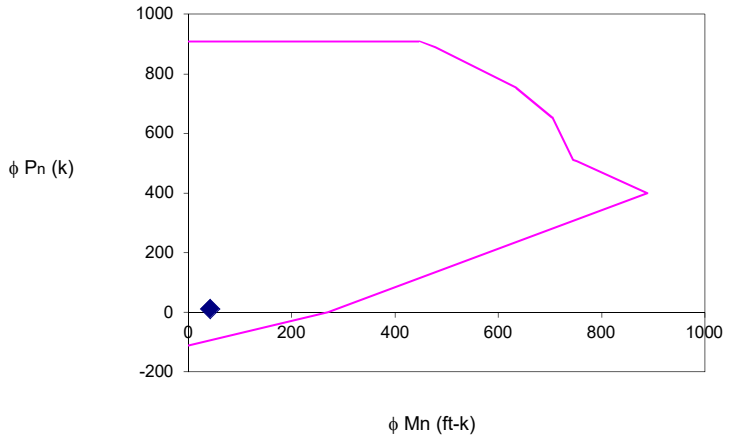

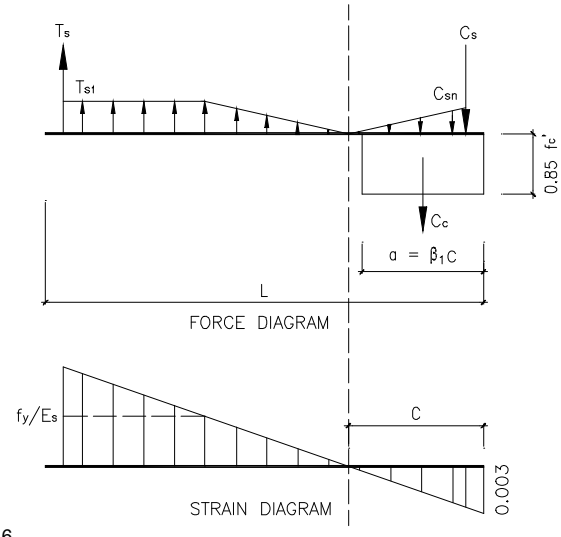

CHECK MINIMUM REINFORCEMENT RATIOS AND SPACING (ACI 318-14 18.10.2.1 & 11.6. . ,

$(\rho_t)_{min.}$ = 0.0020 [for $A_{cv}(f_c')^{0.5}$ = 30.36 kips > Vu , and bar size # 4 horizontal]

$(\rho_l)_{min.}$ = 0.0012 [for $A_{cv}(f_c')^{0.5}$ = 30.36 kips > Vu , and bar size # 5 vertical]

$(\rho_t)_{provd.}$ = 0.0025 > $(\rho_t)_{min.}$ [Satisfactory]

$(\rho_l)_{provd.}$ = 0.0032 > $(\rho_l)_{min.}$ [Satisfactory]

where A_{cv} = 480 in^2 (gross area of concrete section bounded by web thickness and length in the shear direction)

The proposed spacing is less than the maximum permissible value of 18 in and is satisfactory. Since wall V_u < $2 A_{cv}(f_c')^{0.5}$, one curtain reinforcement required. (ACI 318-14 18.10.2.2)

CHECK SHEAR CAPACITY (ACI 318-14 18.10.4.1 & 18.10.4.4)

ϕV_n =MIN [$\phi A_{cv}(\alpha_c (f_c')^{0.5} + \rho_t f_y)$, $\phi 8 A_{cv}(f_c')^{0.5}$] = 79.63 kips > V_u [Satisfactory]

where ϕ = 0.60 (conservatively, ACI 318-14 21.2)

α_c = 2.0 (for h_w / L = 2.60 > 2)

ρ_l > ρ_t [Satisfactory] (only for h_w / L > 2.0, ACI 318-14 18.10.4.3)

(cont'd)

CHECK FLEXURAL & AXIAL CAPACITY

MAXIMUM DESIGN AXIAL LOAD STRENGTH (ACI 318-14 18 & 22.4)

$\phi P_{max} = 0.8\ \phi\ [\ 0.85\ f_c'\ (A_g - A_{st}) + f_y A_{st}]$ = 909.47 kips. > P_u [Satisfactory]

where ϕ = 0.65 (ACI 318-14 21.2)

A_{st} = 2.07 in^2.

DESIGN MOMENT CAPACITY AT MAXIMUM AXIAL LOAD STRENGTH ARE FROM 0 TO 448 ft-kips.

FOR THE BALANCED STRAIN CONDITION UNDER COMBINED FLEXURE AND AXIAL LOAD, THE MAXIMUM STRAIN IN THE CONCRETE AND IN THE TENSION REINFORCEMENT MUST SIMULTANEOUSLY REACH THE VALUES SPECIFIED IN ACI 318-14 21.2.2

AS ε_c = 0.003 AND $\varepsilon_t = f_y / E_s$ = 0.002069 . THE DEPTH TO THE NEUTRAL AXIS AND EQUIVALENT RECTANGULAR CONCRETE STRESS BLOCK ARE GIVEN BY

$C_b = d\ \varepsilon_c / (\varepsilon_c + \varepsilon_s)$ = 33 in $a = C_b\ \beta_1$ = 28 in β_1 = 0.85 (ACI 318-14 22.2.2.4.3)

$\phi = 0.65 + (\varepsilon_t - 0.002)(250/3)$ = 0.656 (ACI 318-14 21.2) d = (L - 0.5D) = 56 in

DESIGN AXIAL AND MOMENT CAPACITIES AT THE BALANCED STRAIN CONDITION ARE 508 kips AND 752 ft-kips.

IN ACCORDANCE WITH ACI 318-14 21.2 THE DESIGN MOMENT CAPACITY WITHOUT AXIAL LOAD IS

$\phi M_n = 0.9\ M_n$ = 270 kips.

TO KEEP TENSION SECTION WITH SHEAR CAPACITY PER ACI 11.5.4.6, THE PURE AXIAL TENSION CAPACITY IS

$-\phi P_n = -0.9\ MIN(A_{st} F_y\ ,\ 3.3\ f_c'^{0.5}\ 4\ L\ t\ )$ = -112 kips.

SUMMARY OF LOAD VERSUS MOMENT CAPACITIES ARE SHOWN IN THE TABLE BELOW, AND THEY ARE PLOTTED ON THE INTERACTION DIAGRAM AT FRONT PAGE.

		ϕP_n (kips)	ϕM_n (ft-kips)
AT AXIAL LOAD ONLY	=	909	0
AT MAXIMUM LOAD	=	909	448
AT 0 % TENSION	=	889	478
AT 25 % TENSION	=	755	634
AT 50 % TENSION	=	652	705
AT ε_t = 0.002	=	512	745
AT BALANCED CONDITION	=	508	752
AT ε_t = 0.005	=	400	889
AT FLEXURE ONLY	=	0	270
AT TENSION ONLY	=	-112	0

DESIGN FORCES P_u & M_u ARE ALSO PLOTTED ON THE INTERACTION DIAGRAM. FROM THE INTERACTION DIAGRAM.

THE ALLOWABLE MOMENT AT AN AXIAL LOAD P_u IS GIVEN BY

ϕM_n = 293 kips. > M_u [Satisfactory]

where $\phi = Min\{0.9, Max[0.65 + (\varepsilon_t - 0.002)(250/3)\ ,\ 0.65]\}$ = 0.900 (ACI 318-14 21.2)

CHECK BOUNDARY ZONE REQUIREMENTS

AN EXEMPTION FROM THE PROVISION OF BOUNDARY ZONE CONFINEMENT REINFORCEMENT IS GIVEN BY ACI 318-14 18.10.6.2, 18.10.6.3, and 18.10.6.5(a) PROVIDED THAT

$c < (L\ h_w) / 1.5(600\ \delta_u)$ for ACI 21.9.6.2 apply or $f_c < 0.2\ f_c'$ for ACI 18.10.6.3 apply [Satisfactory]

where c = 5 in. (distance from the extreme compression fiber to neutral axis at P_u & M_n loads.)

δ_u = 0.8 in. (design displacement, assume $0.005h_w$ as a conservative short cut, see ACI 318-14 18.10.6.2.)

$f_c = (P_u / A) + (M_u\ y / I)$ = 0.123 ksi. (the maximum extreme fiber compressive stress at P_u & M_u loads.)

y = 30 in. (distance from the extreme compression fiber to neutral axis at P_u & M_u loads.)

A = 497 in^2. (area of transformed section.)

I = 148988 in^4. (moment of inertia of transformed section.)

Or the longitudinal reinforcement ratio at the wall end = 0.005 < $400 / f_y$ [Satisfactory]

HENCE BOUNDARY ZONE DETAIL REQUIREMENTS ARE NOT NECESSARY AND OMIT THE CALCULATIONS BELOW.

The boundary element length = MAX(c - 0.1L , 0.5 c) = 2.56 in. (ACI 318-14 18.10.6.4)

The maximum hoop spacing = MIN[B/4 , $6d_b$, 6 , $4+(14-h_x)/3$] = 8 in.o.c. (ACI 318-14 18.10.6.2 & 18.10.6.5)

$A_{sh,\ B\ DIR} = (0.09\ s\ h_c\ f_c')\ /\ f_{yh}$ = N/A in^2.

$A_{sh,\ L\ DIR} = (0.09\ s\ h_c\ f_c')\ /\ f_{yh}$ = N/A in^2.

THANG LE & ASSOCIATES TLA STRUCTURAL ENGINEERS

PROJECT :
CLIENT :
JOB NO. : DATE :

PAGE :
DESIGN BY :
REVIEW BY :

Special Reinforced Concrete Shear Wall Design Based on ACI 318-14 & 2016 CBC Chapter A — EW9

INPUT DATA

CONCRETE STRENGTH (ACI 318 19.2.1.1)	f_c' =	4	ksi, (28 MPa)	
REBAR YIELD STRESS	f_y =	60	ksi, (414 MPa)	
FACTORED AXIAL LOAD	P_u =	115	kips, (512 kN)	
FACTORED MOMENT LOAD	M_u =	809	ft-kips, (1097 kN-m)	
FACTORED SHEAR LOAD	V_u =	100	kips, (445 kN)	
LENGTH OF SHEAR WALL	L =	14.3	ft, (4.36 m)	
THICKNESS OF WALL	t =	8	in, (203 mm)	
DEPTH AT FLANGE	D =	8	in, (203 mm)	
WIDTH AT FLANGE	B =	8	in, (203 mm)	
TOTAL WALL HEIGHT TO TOP	h_w =	13	ft, (3.96 m)	
REINF. BARS AT BULB		1 # 5		
WALL DIST. HORIZ. REINF.		1 # 4 @ 10	in, (254 mm) o.c.	
WALL DIST. VERT. REINF.		1 # 5 @ 12	in, (305 mm) o.c.	
HOOP REINF - WIDTH, B, DIR.		1 legs of # 4		
HOOP REINF - LENGTH DIR.		1 legs of # 4		
WALL EFFECTIVELY CONTINUOUS ?		Yes	(ACI 18.10.6.2 apply)	

DESIGN SUMMARY

SHEAR WALL LENGTH	L =	14.30	ft, (4.36 m)	
SHEAR WALL THICKNESS	t =	8.00	in, (203 mm)	
END REINFORCING	1 # 5			
WALL HORIZ. REINF	1 # 4 @ 10		in. (254 mm), o.c.	
WALL VERT. REINF	1 # 5 @ 12		in. (305 mm), o.c.	
HOOP REINF - WIDTH, B, DIR.				
HOOP REINF - LENGTH DIR.				

THE WALL DESIGN IS ADEQUATE

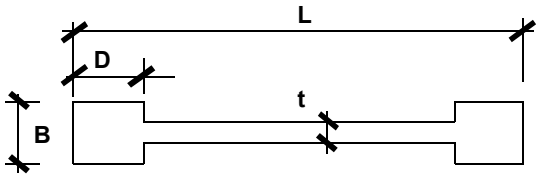

ANALYSIS

DETERMINE WHETHER THE WALL CAN RESIST SEISMIC LOADS (2016 CBC 1905A)

P_u = 115 k < $0.35\ A_g\ f_c'$ = 1922 k [Satisfactory]

where A_g = 1373 in^2.

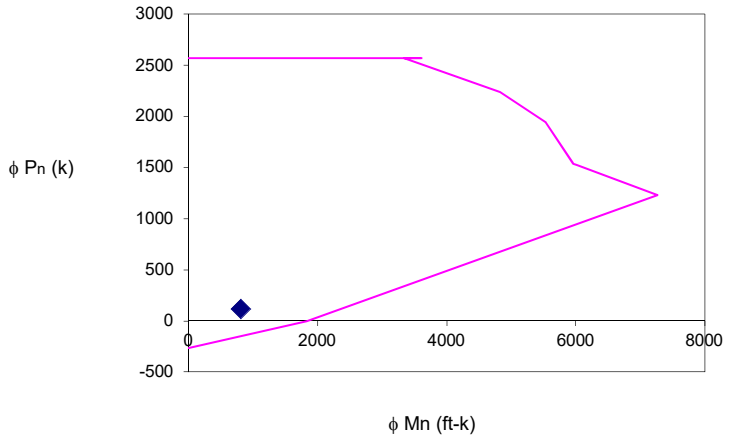

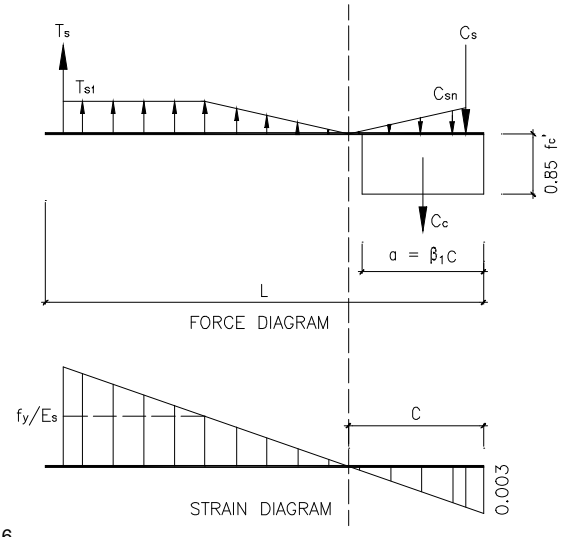

CHECK MINIMUM REINFORCEMENT RATIOS AND SPACING (ACI 318-14 18.10.2.1 & 11.6. . ,

$(\rho_t)_{min.}$ = 0.0025 [for $A_{cv}\,(f_c')^{0.5}$ = 86.82 kips < Vu , and bar size # 4 horizontal]

$(\rho_l)_{min.}$ = 0.0025 [for $A_{cv}\,(f_c')^{0.5}$ = 86.82 kips < Vu , and bar size # 5 vertical]

$(\rho_t)_{provd.}$ = 0.0025 > $\rho(_t)_{min.}$ [Satisfactory]

$(\rho_l)_{provd.}$ = 0.0032 > $(\rho_l)_{min.}$ [Satisfactory]

where A_{cv} = 1373 in^2 (gross area of concrete section bounded by web thickness and length in the shear direction)

The proposed spacing is less than the maximum permissible value of 18 in and is satisfactory. Since wall V_u < $2\ A_{cv}\,(f_c')^{0.5}$, one curtain reinforcement required. (ACI 318-14 18.10.2.2)

CHECK SHEAR CAPACITY (ACI 318-14 18.10.4.1 & 18.10.4.4)

ϕV_n =MIN [$\phi\ A_{cv}\,(\alpha_c\,(f_c')^{0.5} + \rho_t\,f_y)$, $\phi\ 8\ A_{cv}\,(f_c')^{0.5}$] = 279.83 kips > V_u [Satisfactory]

where ϕ = 0.60 (conservatively, ACI 318-14 21.2)

α_c = 3.0 (for h_w / L = 0.91 < 1.5)

ρ_l > ρ_t [Satisfactory] (only for h_w / L > 2.0, ACI 318-14 18.10.4.3)

(cont'd)

CHECK FLEXURAL & AXIAL CAPACITY

MAXIMUM DESIGN AXIAL LOAD STRENGTH (ACI 318-14 18 & 22.4)

$\phi P_{max} = 0.8\ \phi\ [\ 0.85\ f_c'\ (A_g - A_{st}) + f_y A_{st}]$ = 2572.8 kips. > P_u [Satisfactory]

where ϕ = 0.65 (ACI 318-14 21.2)

A_{st} = 4.95 in^2.

DESIGN MOMENT CAPACITY AT MAXIMUM AXIAL LOAD STRENGTH ARE FROM 0 TO 3610 ft-kips.

FOR THE BALANCED STRAIN CONDITION UNDER COMBINED FLEXURE AND AXIAL LOAD, THE MAXIMUM STRAIN IN THE CONCRETE AND IN THE TENSION REINFORCEMENT MUST SIMULTANEOUSLY REACH THE VALUES SPECIFIED IN ACI 318-14 21.2.2

AS ε_c = 0.003 AND $\varepsilon_t = f_y / E_s$ = 0.002069 . THE DEPTH TO THE NEUTRAL AXIS AND EQUIVALENT RECTANGULAR CONCRETE STRESS BLOCK ARE GIVEN BY

$C_b = d\ \varepsilon_c / (\varepsilon_c + \varepsilon_s)$ = 99 in $a = C_b\ \beta_1$ = 84 in β_1 = 0.85 (ACI 318-14 22.2.2.4.3)

$\phi = 0.65 + (\varepsilon_t - 0.002)(250/3)$ = 0.656 (ACI 318-14 21.2) d = (L - 0.5D) = 167.6 in

DESIGN AXIAL AND MOMENT CAPACITIES AT THE BALANCED STRAIN CONDITION ARE 1528 kips AND 6018 ft-kips.

IN ACCORDANCE WITH ACI 318-14 21.2 THE DESIGN MOMENT CAPACITY WITHOUT AXIAL LOAD IS

$\phi M_n = 0.9\ M_n$ = 1836 kips.

TO KEEP TENSION SECTION WITH SHEAR CAPACITY PER ACI 11.5.4.6, THE PURE AXIAL TENSION CAPACITY IS

$-\phi P_n = -0.9\ MIN(A_{st} F_y\ ,\ 3.3\ f_c'^{0.5}\ 4\ L\ t\ )$ = -267 kips.

SUMMARY OF LOAD VERSUS MOMENT CAPACITIES ARE SHOWN IN THE TABLE BELOW, AND THEY ARE PLOTTED ON THE INTERACTION DIAGRAM AT FRONT PAGE.

		ϕP_n (kips)	ϕM_n (ft-kips)
AT AXIAL LOAD ONLY	=	2573	0
AT MAXIMUM LOAD	=	2573	3610
AT 0 % TENSION	=	2573	3337
AT 25 % TENSION	=	2241	4829
AT 50 % TENSION	=	1943	5531
AT ε_t = 0.002	=	1538	5958
AT BALANCED CONDITION	=	1528	6018
AT ε_t = 0.005	=	1231	7266
AT FLEXURE ONLY	=	0	1836
AT TENSION ONLY	=	-267	0

DESIGN FORCES P_u & M_u ARE ALSO PLOTTED ON THE INTERACTION DIAGRAM. FROM THE INTERACTION DIAGRAM.

THE ALLOWABLE MOMENT AT AN AXIAL LOAD P_u IS GIVEN BY

ϕM_n = 2544 kips. > M_u [Satisfactory]

where $\phi = Min\{0.9, Max[0.65 + (\varepsilon_t - 0.002)(250/3)\ ,\ 0.65]\}$ = 0.900 (ACI 318-14 21.2)

CHECK BOUNDARY ZONE REQUIREMENTS

AN EXEMPTION FROM THE PROVISION OF BOUNDARY ZONE CONFINEMENT REINFORCEMENT IS GIVEN BY ACI 318-14 18.10.6.2, 18.10.6.3, and 18.10.6.5(a) PROVIDED THAT

$c < (L\ h_w) / 1.5(600\ \delta_u)$ for ACI 21.9.6.2 apply or $f_c < 0.2\ f_c'$ for ACI 18.10.6.3 apply [Satisfactory]

where c = 16 in. (distance from the extreme compression fiber to neutral axis at P_u & M_n loads.)

δ_u = 0.8 in. (design displacement, assume $0.005h_w$ as a conservative short cut, see ACI 318-14 18.10.6.2.)

$f_c = (P_u / A) + (M_u\ y / I)$ = 0.322 ksi. (the maximum extreme fiber compressive stress at P_u & M_u loads.)

y = 86 in. (distance from the extreme compression fiber to neutral axis at P_u & M_u loads.)

A = 1413 in^2. (area of transformed section.)

I = 3466393 in^4. (moment of inertia of transformed section.)

Or the longitudinal reinforcement ratio at the wall end = 0.005 < $400 / f_y$ [Satisfactory]

HENCE BOUNDARY ZONE DETAIL REQUIREMENTS ARE NOT NECESSARY AND OMIT THE CALCULATIONS BELOW.

The boundary element length = MAX(c - 0.1L , 0.5 c) = 7.99 in. (ACI 318-14 18.10.6.4)

The maximum hoop spacing = MIN[B/4 , $6d_b$, 6 , $4+(14-h_x)/3$] = 8 in.o.c. (ACI 318-14 18.10.6.2 & 18.10.6.5)

$A_{sh,\ B\ DIR} = (0.09\ s\ h_c\ f_c')\ /\ f_{yh}$ = N/A in^2.

$A_{sh,\ L\ DIR} = (0.09\ s\ h_c\ f_c')\ /\ f_{yh}$ = N/A in^2.

THANG LE & ASSOCIATES TLA STRUCTURAL ENGINEERS

PROJECT :
CLIENT :
JOB NO. : DATE :

PAGE :
DESIGN BY :
REVIEW BY :

Special Reinforced Concrete Shear Wall Design Based on ACI 318-14 & 2016 CBC Chapter A **EW10**

INPUT DATA

CONCRETE STRENGTH (ACI 318 19.2.1.1)	f_c' =	4	*ksi, (28 MPa)*	
REBAR YIELD STRESS	f_y =	60	*ksi, (414 MPa)*	
FACTORED AXIAL LOAD	P_u =	251	*kips, (1117 kN)*	
FACTORED MOMENT LOAD	M_u =	2196	*ft-kips, (2977 kN-m)*	
FACTORED SHEAR LOAD	V_u =	170	*kips, (756 kN)*	
LENGTH OF SHEAR WALL	L =	24.5	*ft, (7.47 m)*	
THICKNESS OF WALL	t =	8	*in, (203 mm)*	
DEPTH AT FLANGE	D =	8	*in, (203 mm)*	
WIDTH AT FLANGE	B =	8	*in, (203 mm)*	
TOTAL WALL HEIGHT TO TOP	h_w =	13	*ft, (3.96 m)*	

REINF. BARS AT BULB		1	#	5		
WALL DIST. HORIZ. REINF.	1	#	4	@	10	*in, (254 mm) o.c.*
WALL DIST. VERT. REINF.	1	#	5	@	12	*in, (305 mm) o.c.*
HOOP REINF - WIDTH, B, DIR.	1	legs of	#	4		
HOOP REINF - LENGTH DIR.	1	legs of	#	4		
WALL EFFECTIVELY CONTINUOUS ?				Yes		(ACI 18.10.6.2 apply)

DESIGN SUMMARY

SHEAR WALL LENGTH	L =	24.50	*ft, (7.47 m)*
SHEAR WALL THICKNESS	t =	8.00	*in, (203 mm)*

END REINFORCING	1	#	5			
WALL HORIZ. REINF	1	#	4	@	10	*in. (254 mm), o.c.*
WALL VERT. REINF	1	#	5	@	12	*in. (305 mm), o.c.*
HOOP REINF - WIDTH, B, DIR.						
HOOP REINF - LENGTH DIR.						

THE WALL DESIGN IS ADEQUATE

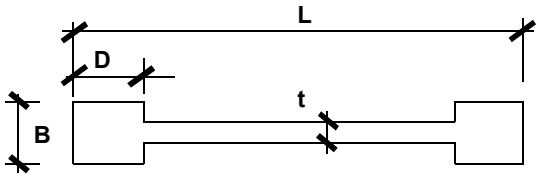

ANALYSIS

DETERMINE WHETHER THE WALL CAN RESIST SEISMIC LOADS (2016 CBC 1905A)

Pu = 251 k < 0.35 A_g f_c' = 3293 k [Satisfactory]

where A_g = 2352 in^2.

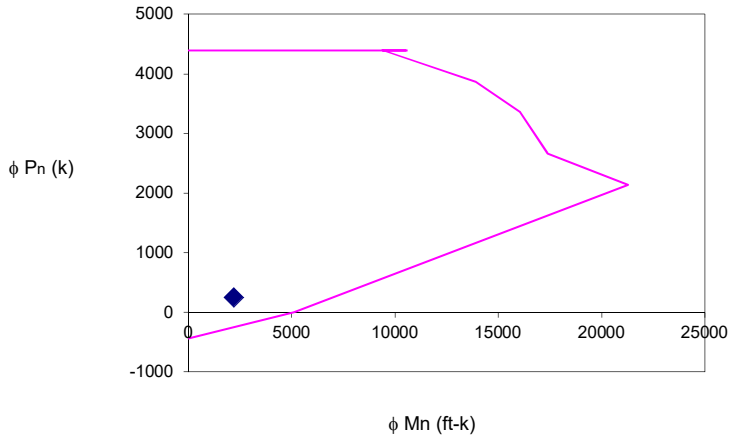

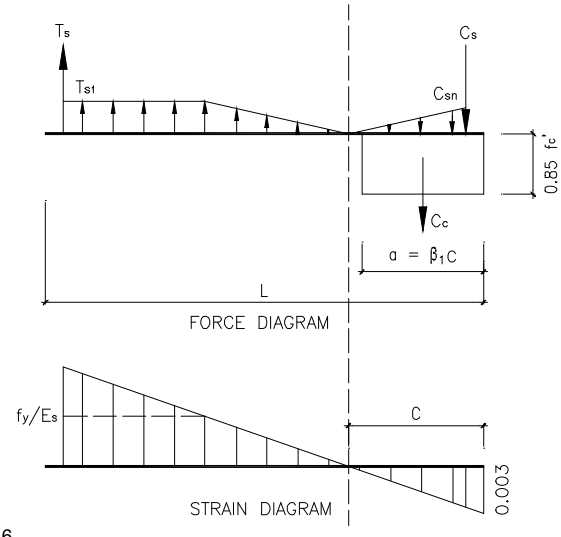

CHECK MINIMUM REINFORCEMENT RATIOS AND SPACING (ACI 318-14 18.10.2.1 & 11.6. . ,

$(\rho_t)_{min.}$ = 0.0025 [for $A_{cv}(f_c')^{0.5}$ = 148.75 kips < Vu , and bar size # 4 horizontal]

$(\rho_l)_{min.}$ = 0.0025 [for $A_{cv}(f_c')^{0.5}$ = 148.75 kips < Vu , and bar size # 5 vertical]

$(\rho_t)_{provd.}$ = 0.0025 > $\rho(_t)_{min.}$ [Satisfactory]

$(\rho_l)_{provd.}$ = 0.0032 > $(\rho_l)_{min.}$ [Satisfactory]

where A_{cv} = 2352 in^2 (gross area of concrete section bounded by web thickness and length in the shear direction)

The proposed spacing is less than the maximum permissible value of 18 in and is satisfactory. Since wall V_u < $2 A_{cv}(f_c')^{0.5}$, one curtain reinforcement required. (ACI 318-14 18.10.2.2)

CHECK SHEAR CAPACITY (ACI 318-14 18.10.4.1 & 18.10.4.4)

ϕV_n =MIN [$\phi A_{cv}(\alpha_c (f_c')^{0.5} + \rho_t f_y)$, $\phi 8 A_{cv}(f_c')^{0.5}$] = 479.44 kips > V_u [Satisfactory]

where ϕ = 0.60 (conservatively, ACI 318-14 21.2)

α_c = 3.0 (for h_w / L = 0.53 < 1.5)

ρ_l > ρ_t [Satisfactory] (only for h_w / L > 2.0, ACI 318-14 18.10.4.3)

(cont'd)

CHECK FLEXURAL & AXIAL CAPACITY

MAXIMUM DESIGN AXIAL LOAD STRENGTH (ACI 318-14 18 & 22.4)

$\phi P_{max} = 0.8\ \phi\ [\ 0.85\ f_c'\ (A_g - A_{st}) + f_y A_{st}]$ = 4397.1 kips. > P_u [Satisfactory]

where ϕ = 0.65 (ACI 318-14 21.2)

A_{st} = 8.11 in^2.

DESIGN MOMENT CAPACITY AT MAXIMUM AXIAL LOAD STRENGTH ARE FROM 0 TO 10556 ft-kips.

FOR THE BALANCED STRAIN CONDITION UNDER COMBINED FLEXURE AND AXIAL LOAD, THE MAXIMUM STRAIN IN THE CONCRETE AND IN THE TENSION REINFORCEMENT MUST SIMULTANEOUSLY REACH THE VALUES SPECIFIED IN ACI 318-14 21.2.2

AS ε_c = 0.003 AND $\varepsilon_t = f_y / E_s$ = 0.002069 . THE DEPTH TO THE NEUTRAL AXIS AND EQUIVALENT RECTANGULAR CONCRETE STRESS BLOCK ARE GIVEN BY

$C_b = d\ \varepsilon_c / (\varepsilon_c + \varepsilon_s)$ = 172 in $a = C_b\ \beta_1$ = 146 in β_1 = 0.85 (ACI 318-14 22.2.2.4.3)

$\phi = 0.65 + (\varepsilon_t - 0.002)(250/3)$ = 0.656 (ACI 318-14 21.2) d = (L - 0.5D) = 290 in

DESIGN AXIAL AND MOMENT CAPACITIES AT THE BALANCED STRAIN CONDITION ARE 2645 kips AND 17545 ft-kips.

IN ACCORDANCE WITH ACI 318-14 21.2 THE DESIGN MOMENT CAPACITY WITHOUT AXIAL LOAD IS

$\phi M_n = 0.9\ M_n$ = 5122 kips.

TO KEEP TENSION SECTION WITH SHEAR CAPACITY PER ACI 11.5.4.6, THE PURE AXIAL TENSION CAPACITY IS

$-\phi P_n = -0.9\ MIN(A_{st} F_y\ ,\ 3.3\ f_c'^{0.5}\ 4\ L\ t\ )$ = -438 kips.

SUMMARY OF LOAD VERSUS MOMENT CAPACITIES ARE SHOWN IN THE TABLE BELOW, AND THEY ARE PLOTTED ON THE INTERACTION DIAGRAM AT FRONT PAGE.

		ϕP_n (kips)	ϕM_n (ft-kips)
AT AXIAL LOAD ONLY	=	4397	0
AT MAXIMUM LOAD	=	4397	10556
AT 0 % TENSION	=	4397	9384
AT 25 % TENSION	=	3871	13911
AT 50 % TENSION	=	3359	16052
AT ε_t = 0.002	=	2662	17367
AT BALANCED CONDITION	=	2645	17545
AT ε_t = 0.005	=	2139	21280
AT FLEXURE ONLY	=	0	5122
AT TENSION ONLY	=	-438	0

DESIGN FORCES P_u & M_u ARE ALSO PLOTTED ON THE INTERACTION DIAGRAM. FROM THE INTERACTION DIAGRAM.

THE ALLOWABLE MOMENT AT AN AXIAL LOAD P_u IS GIVEN BY

ϕM_n = 7770 kips. > M_u [Satisfactory]

where $\phi = Min\{0.9, Max[0.65 + (\varepsilon_t - 0.002)(250/3)\ ,\ 0.65]\}$ = 0.900 (ACI 318-14 21.2)

CHECK BOUNDARY ZONE REQUIREMENTS

AN EXEMPTION FROM THE PROVISION OF BOUNDARY ZONE CONFINEMENT REINFORCEMENT IS GIVEN BY ACI 318-14 18.10.6.2, 18.10.6.3, and 18.10.6.5(a) PROVIDED THAT

$c < (L\ h_w) / 1.5(600\ \delta_u)$ for ACI 21.9.6.2 apply or $f_c < 0.2\ f_c'$ for ACI 18.10.6.3 apply [Satisfactory]

where c = 29 in. (distance from the extreme compression fiber to neutral axis at P_u & M_n loads.)

δ_u = 0.8 in. (design displacement, assume $0.005h_w$ as a conservative short cut, see ACI 318-14 18.10.6.2.)

$f_c = (P_u / A) + (M_u\ y / I)$ = 0.326 ksi. (the maximum extreme fiber compressive stress at P_u & M_u loads.)

y = 147 in. (distance from the extreme compression fiber to neutral axis at P_u & M_u loads.)

A = 2417 in^2. (area of transformed section.)

I = 17411476 in^4. (moment of inertia of transformed section.)

Or the longitudinal reinforcement ratio at the wall end = 0.005 < $400 / f_y$ [Satisfactory]

HENCE BOUNDARY ZONE DETAIL REQUIREMENTS ARE NOT NECESSARY AND OMIT THE CALCULATIONS BELOW.

The boundary element length = MAX(c - 0.1L , 0.5 c) = 14.62 in. (ACI 318-14 18.10.6.4)

The maximum hoop spacing = MIN[B/4 , $6d_b$, 6 , $4+(14-h_x)/3$] = 8 in.o.c. (ACI 318-14 18.10.6.2 & 18.10.6.5)

$A_{sh,\ B\ DIR} = (0.09\ s\ h_c\ f_c')\ /\ f_{yh}$ = N/A in^2.

$A_{sh,\ L\ DIR} = (0.09\ s\ h_c\ f_c')\ /\ f_{yh}$ = N/A in^2.

THANG LE & ASSOCIATES TLA STRUCTURAL ENGINEERS

PROJECT :
CLIENT :
JOB NO. : DATE :

PAGE :
DESIGN BY :
REVIEW BY :

Special Reinforced Concrete Shear Wall Design Based on ACI 318-14 & 2016 CBC Chapter A — EW11

INPUT DATA

CONCRETE STRENGTH (ACI 318 19.2.1.1)	f_c' =	4	ksi, (28 MPa)	
REBAR YIELD STRESS	f_y =	60	ksi, (414 MPa)	
FACTORED AXIAL LOAD	P_u =	418	kips, (1859 kN)	
FACTORED MOMENT LOAD	M_u =	9171	ft-kips, (12434 kN-m)	
FACTORED SHEAR LOAD	V_u =	637	kips, (2834 kN)	
LENGTH OF SHEAR WALL	L =	65	ft, (19.81 m)	
THICKNESS OF WALL	t =	8	in, (203 mm)	
DEPTH AT FLANGE	D =	8	in, (203 mm)	
WIDTH AT FLANGE	B =	8	in, (203 mm)	
TOTAL WALL HEIGHT TO TOP	h_w =	13	ft, (3.96 m)	
REINF. BARS AT BULB		1 # 5		
WALL DIST. HORIZ. REINF.		1 # 4 @ 10	in, (254 mm) o.c.	
WALL DIST. VERT. REINF.		1 # 5 @ 12	in, (305 mm) o.c.	
HOOP REINF - WIDTH, B, DIR.		1 legs of # 4		
HOOP REINF - LENGTH DIR.		1 legs of # 4		
WALL EFFECTIVELY CONTINUOUS ?		Yes	(ACI 18.10.6.2 apply)	

DESIGN SUMMARY

SHEAR WALL LENGTH	L =	65.00	ft, (19.81 m)	
SHEAR WALL THICKNESS	t =	8.00	in, (203 mm)	
END REINFORCING	1 # 5			
WALL HORIZ. REINF	1 # 4 @ 10		in. (254 mm), o.c.	
WALL VERT. REINF	1 # 5 @ 12		in. (305 mm), o.c.	
HOOP REINF - WIDTH, B, DIR.				
HOOP REINF - LENGTH DIR.				

THE WALL DESIGN IS ADEQUATE

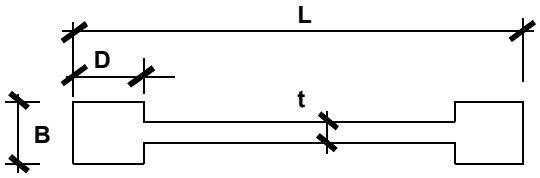

ANALYSIS

DETERMINE WHETHER THE WALL CAN RESIST SEISMIC LOADS (2016 CBC 1905A)

P_u = 418 k < $0.35\ A_g\ f_c'$ = 8736 k [Satisfactory]

where A_g = 6240 in^2.

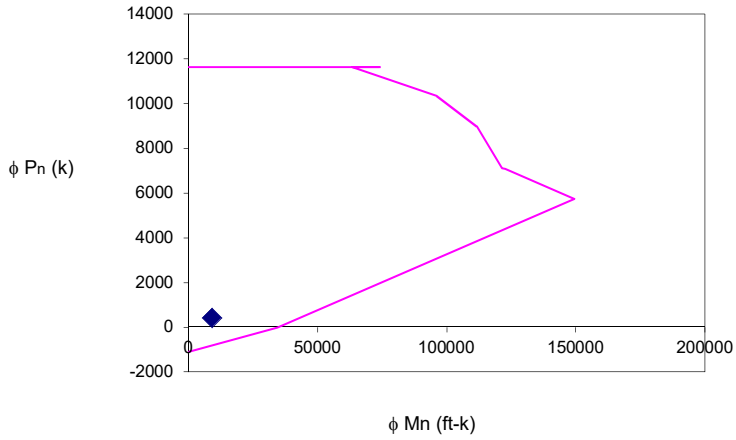

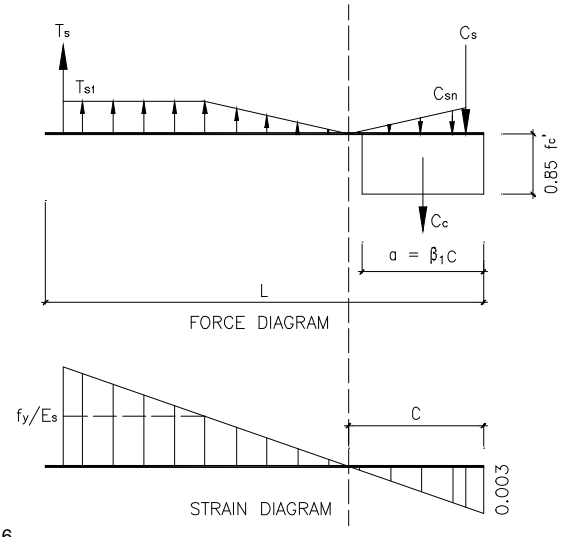

CHECK MINIMUM REINFORCEMENT RATIOS AND SPACING (ACI 318-14 18.10.2.1 & 11.6. . ,

$(\rho_t)_{min.}$ = 0.0025 [for $A_{cv}\,(f_c')^{0.5}$ = 394.65 kips < Vu , and bar size # 4 horizontal]

$(\rho_l)_{min.}$ = 0.0025 [for $A_{cv}\,(f_c')^{0.5}$ = 394.65 kips < Vu , and bar size # 5 vertical]

$(\rho_t)_{provd.}$ = 0.0025 > $\rho(_t)_{min.}$ [Satisfactory]

$(\rho_l)_{provd.}$ = 0.0032 > $(\rho_l)_{min.}$ [Satisfactory]

where A_{cv} = 6240 in^2 (gross area of concrete section bounded by web thickness and length in the shear direction)

The proposed spacing is less than the maximum permissible value of 18 in and is satisfactory. Since wall V_u < $2\,A_{cv}\,(f_c')^{0.5}$, one curtain reinforcement required. (ACI 318-14 18.10.2.2)

CHECK SHEAR CAPACITY (ACI 318-14 18.10.4.1 & 18.10.4.4)

ϕV_n =MIN [$\phi\,A_{cv}\,(\alpha_c\,(f_c')^{0.5} + \rho_t\,f_y)$, $\phi\,8\,A_{cv}\,(f_c')^{0.5}$] = 1271.97 kips > V_u [Satisfactory]

where ϕ = 0.60 (conservatively, ACI 318-14 21.2)

α_c = 3.0 (for h_w / L = 0.20 < 1.5)

ρ_l > ρ_t [Satisfactory] (only for h_w / L > 2.0, ACI 318-14 18.10.4.3)

(cont'd)

CHECK FLEXURAL & AXIAL CAPACITY

MAXIMUM DESIGN AXIAL LOAD STRENGTH (ACI 318-14 18 & 22.4)

$\phi P_{max} = 0.8\ \phi\ [\ 0.85\ f_c'\ (A_g - A_{st}) + f_y A_{st}]$ = 11641 kips. > P_u [Satisfactory]

where ϕ = 0.65 (ACI 318-14 21.2)

A_{st} = 20.67 in^2.

DESIGN MOMENT CAPACITY AT MAXIMUM AXIAL LOAD STRENGTH ARE FROM 0 TO 74017 ft-kips.

FOR THE BALANCED STRAIN CONDITION UNDER COMBINED FLEXURE AND AXIAL LOAD, THE MAXIMUM STRAIN IN THE CONCRETE AND IN THE TENSION REINFORCEMENT MUST SIMULTANEOUSLY REACH THE VALUES SPECIFIED IN ACI 318-14 21.2.2

AS ε_c = 0.003 AND $\varepsilon_t = f_y / E_s$ = 0.002069 . THE DEPTH TO THE NEUTRAL AXIS AND EQUIVALENT RECTANGULAR CONCRETE STRESS BLOCK ARE GIVEN BY

$C_b = d\ \varepsilon_c / (\varepsilon_c + \varepsilon_s)$ = 459 in $a = C_b\ \beta_1$ = 390 in β_1 = 0.85 (ACI 318-14 22.2.2.4.3)

$\phi = 0.65 + (\varepsilon_t - 0.002)(250/3)$ = 0.656 (ACI 318-14 21.2) d = (L - 0.5D) = 776 in

DESIGN AXIAL AND MOMENT CAPACITIES AT THE BALANCED STRAIN CONDITION ARE 7079 kips AND 122699 ft-kips.

IN ACCORDANCE WITH ACI 318-14 21.2 THE DESIGN MOMENT CAPACITY WITHOUT AXIAL LOAD IS

$\phi M_n = 0.9\ M_n$ = 34387 kips.

TO KEEP TENSION SECTION WITH SHEAR CAPACITY PER ACI 11.5.4.6, THE PURE AXIAL TENSION CAPACITY IS

$-\phi P_n = -0.9\ MIN(A_{st} F_y\ ,\ 3.3\ f_c'^{0.5}\ 4\ L\ t\ )$ = -1116 kips.

SUMMARY OF LOAD VERSUS MOMENT CAPACITIES ARE SHOWN IN THE TABLE BELOW, AND THEY ARE PLOTTED ON THE INTERACTION DIAGRAM AT FRONT PAGE.

		ϕP_n (kips)	ϕM_n (ft-kips)
AT AXIAL LOAD ONLY	=	11641	0
AT MAXIMUM LOAD	=	11641	74017
AT 0 % TENSION	=	11641	63459
AT 25 % TENSION	=	10340	96226
AT 50 % TENSION	=	8978	111798
AT ε_t = 0.002	=	7126	121437
AT BALANCED CONDITION	=	7079	122699
AT ε_t = 0.005	=	5745	149433
AT FLEXURE ONLY	=	0	34387
AT TENSION ONLY	=	-1116	0

DESIGN FORCES P_u & M_u ARE ALSO PLOTTED ON THE INTERACTION DIAGRAM. FROM THE INTERACTION DIAGRAM.

THE ALLOWABLE MOMENT AT AN AXIAL LOAD P_u IS GIVEN BY

ϕM_n = 46313 kips. > M_u [Satisfactory]

where $\phi = Min\{0.9, Max[0.65 + (\varepsilon_t - 0.002)(250/3)\ ,\ 0.65]\}$ = 0.900 (ACI 318-14 21.2)

CHECK BOUNDARY ZONE REQUIREMENTS

AN EXEMPTION FROM THE PROVISION OF BOUNDARY ZONE CONFINEMENT REINFORCEMENT IS GIVEN BY ACI 318-14 18.10.6.2, 18.10.6.3, and 18.10.6.5(a) PROVIDED THAT

$c < (L\ h_w) / 1.5(600\ \delta_u)$ for ACI 21.9.6.2 apply or $f_c < 0.2\ f_c'$ for ACI 18.10.6.3 apply [Satisfactory]

where c = 65 in. (distance from the extreme compression fiber to neutral axis at P_u & M_n loads.)

δ_u = 0.8 in. (design displacement, assume $0.005h_w$ as a conservative short cut, see ACI 318-14 18.10.6.2.)

$f_c = (P_u / A) + (M_u\ y / I)$ = 0.197 ksi. (the maximum extreme fiber compressive stress at P_u & M_u loads.)

y = 390 in. (distance from the extreme compression fiber to neutral axis at P_u & M_u loads.)

A = 6406 in^2. (area of transformed section.)

I = 324796912 in^4. (moment of inertia of transformed section.)

Or the longitudinal reinforcement ratio at the wall end = 0.005 < $400 / f_y$ [Satisfactory]

HENCE BOUNDARY ZONE DETAIL REQUIREMENTS ARE NOT NECESSARY AND OMIT THE CALCULATIONS BELOW.

The boundary element length = MAX(c - 0.1L , 0.5 c) = 32.64 in. (ACI 318-14 18.10.6.4)

The maximum hoop spacing = MIN[B/4 , $6d_b$, 6 , $4+(14-h_x)/3$] = 8 in.o.c. (ACI 318-14 18.10.6.2 & 18.10.6.5)

$A_{sh,\ B\ DIR} = (0.09\ s\ h_c\ f_c')\ /\ f_{yh}$ = N/A in^2.

$A_{sh,\ L\ DIR} = (0.09\ s\ h_c\ f_c')\ /\ f_{yh}$ = N/A in^2.

THANG LE & ASSOCIATES TLA STRUCTURAL ENGINEERS

PROJECT :
CLIENT :
JOB NO. : DATE :

PAGE :
DESIGN BY :
REVIEW BY :

Special Reinforced Concrete Shear Wall Design Based on ACI 318-14 & 2016 CBC Chapter A — EW12

INPUT DATA

CONCRETE STRENGTH (ACI 318 19.2.1.1)	f_c' =	4	ksi, (28 MPa)	
REBAR YIELD STRESS	f_y =	60	ksi, (414 MPa)	
FACTORED AXIAL LOAD	P_u =	83	kips, (369 kN)	
FACTORED MOMENT LOAD	M_u =	1178	ft-kips, (1597 kN-m)	
FACTORED SHEAR LOAD	V_u =	98	kips, (436 kN)	
LENGTH OF SHEAR WALL	L =	17.3	ft, (5.27 m)	
THICKNESS OF WALL	t =	8	in, (203 mm)	
DEPTH AT FLANGE	D =	8	in, (203 mm)	
WIDTH AT FLANGE	B =	8	in, (203 mm)	
TOTAL WALL HEIGHT TO TOP	h_w =	13	ft, (3.96 m)	
REINF. BARS AT BULB		1 # 5		
WALL DIST. HORIZ. REINF.		1 # 4 @ 10	in, (254 mm) o.c.	
WALL DIST. VERT. REINF.		1 # 5 @ 12	in, (305 mm) o.c.	
HOOP REINF - WIDTH, B, DIR.		1 legs of # 4		
HOOP REINF - LENGTH DIR.		1 legs of # 4		
WALL EFFECTIVELY CONTINUOUS ?		Yes	(ACI 18.10.6.2 apply)	

DESIGN SUMMARY

SHEAR WALL LENGTH	L =	17.30	ft, (5.27 m)	
SHEAR WALL THICKNESS	t =	8.00	in, (203 mm)	
END REINFORCING	1 # 5			
WALL HORIZ. REINF	1 # 4 @ 10		in. (254 mm), o.c.	
WALL VERT. REINF	1 # 5 @ 12		in. (305 mm), o.c.	
HOOP REINF - WIDTH, B, DIR.				
HOOP REINF - LENGTH DIR.				

THE WALL DESIGN IS ADEQUATE

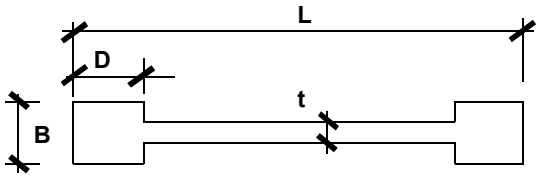

ANALYSIS

DETERMINE WHETHER THE WALL CAN RESIST SEISMIC LOADS (2016 CBC 1905A)

P_u = 83 k < $0.35\ A_g\ f_c'$ = 2325 k [Satisfactory]

where A_g = 1661 in^2.

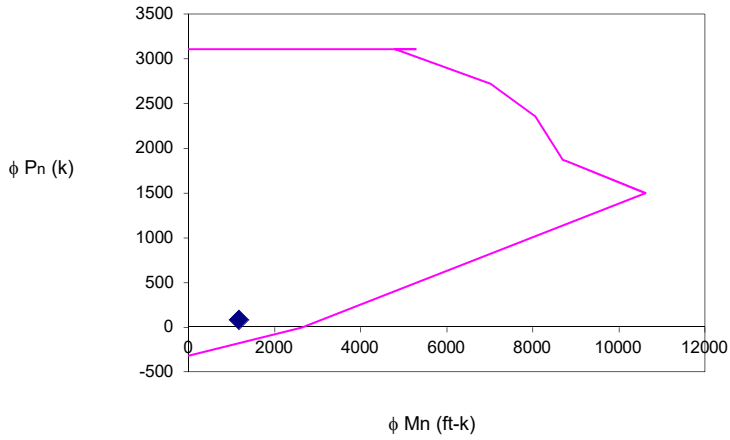

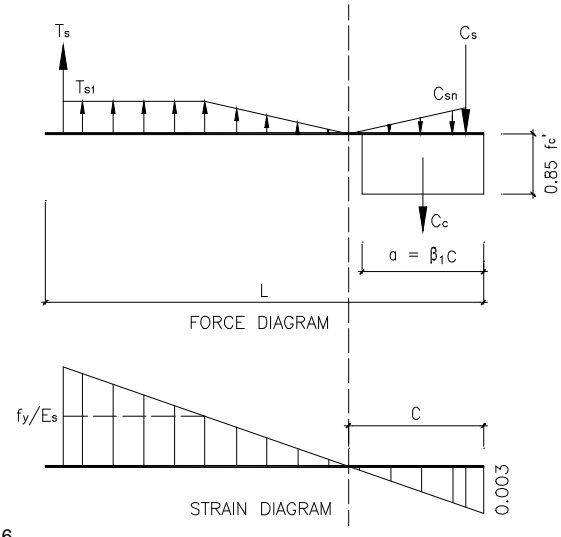

CHECK MINIMUM REINFORCEMENT RATIOS AND SPACING (ACI 318-14 18.10.2.1 & 11.6. . ,

$(\rho_t)_{min.}$ = 0.0020 [for $A_{cv}\,(f_c')^{0.5}$ = 105.04 kips > Vu , and bar size # 4 horizontal]

$(\rho_l)_{min.}$ = 0.0012 [for $A_{cv}\,(f_c')^{0.5}$ = 105.04 kips > Vu , and bar size # 5 vertical]

$(\rho_t)_{provd.}$ = 0.0025 > $(\rho_t)_{min.}$ [Satisfactory]

$(\rho_l)_{provd.}$ = 0.0032 > $(\rho_l)_{min.}$ [Satisfactory]

where A_{cv} = 1661 in^2 (gross area of concrete section bounded by web thickness and length in the shear direction)

The proposed spacing is less than the maximum permissible value of 18 in and is satisfactory. Since wall V_u < $2\,A_{cv}\,(f_c')^{0.5}$, one curtain reinforcement required. (ACI 318-14 18.10.2.2)

CHECK SHEAR CAPACITY (ACI 318-14 18.10.4.1 & 18.10.4.4)

ϕV_n =MIN [$\phi\,A_{cv}\,(\alpha_c\,(f_c')^{0.5} + \rho_t\,f_y)$, $\phi\,8\,A_{cv}\,(f_c')^{0.5}$] = 338.54 kips > V_u [Satisfactory]

where ϕ = 0.60 (conservatively, ACI 318-14 21.2)

α_c = 3.0 (for h_w / L = 0.75 < 1.5)

ρ_l > ρ_t [Satisfactory] (only for h_w / L > 2.0, ACI 318-14 18.10.4.3)

(cont'd)

CHECK FLEXURAL & AXIAL CAPACITY

MAXIMUM DESIGN AXIAL LOAD STRENGTH (ACI 318-14 18 & 22.4)

$\phi P_{max} = 0.8\ \phi\ [\ 0.85\ f_c'\ (A_g - A_{st}) + f_y A_{st}]$ = 3109.3 kips. > P_u [Satisfactory]

where ϕ = 0.65 (ACI 318-14 21.2)

A_{st} = 5.88 in^2.

DESIGN MOMENT CAPACITY AT MAXIMUM AXIAL LOAD STRENGTH ARE FROM 0 TO 5276 ft-kips.

FOR THE BALANCED STRAIN CONDITION UNDER COMBINED FLEXURE AND AXIAL LOAD, THE MAXIMUM STRAIN IN THE CONCRETE AND IN THE TENSION REINFORCEMENT MUST SIMULTANEOUSLY REACH THE VALUES SPECIFIED IN ACI 318-14 21.2.2

AS ε_c = 0.003 AND $\varepsilon_t = f_y / E_s$ = 0.002069 . THE DEPTH TO THE NEUTRAL AXIS AND EQUIVALENT RECTANGULAR CONCRETE STRESS BLOCK ARE GIVEN BY

$C_b = d\ \varepsilon_c / (\varepsilon_c + \varepsilon_s)$ = 120 in $a = C_b\ \beta_1$ = 102 in β_1 = 0.85 (ACI 318-14 22.2.2.4.3)

$\phi = 0.65 + (\varepsilon_t - 0.002)(250/3)$ = 0.656 (ACI 318-14 21.2) d = (L - 0.5D) = 203.6 in

DESIGN AXIAL AND MOMENT CAPACITIES AT THE BALANCED STRAIN CONDITION ARE 1856 kips AND 8784 ft-kips.

IN ACCORDANCE WITH ACI 318-14 21.2 THE DESIGN MOMENT CAPACITY WITHOUT AXIAL LOAD IS

$\phi M_n = 0.9\ M_n$ = 2633 kips.

TO KEEP TENSION SECTION WITH SHEAR CAPACITY PER ACI 11.5.4.6, THE PURE AXIAL TENSION CAPACITY IS

$-\phi P_n = -0.9\ MIN(A_{st} F_y\ ,\ 3.3\ f_c'^{0.5}\ 4\ L\ t\ )$ = -318 kips.

SUMMARY OF LOAD VERSUS MOMENT CAPACITIES ARE SHOWN IN THE TABLE BELOW, AND THEY ARE PLOTTED ON THE INTERACTION DIAGRAM AT FRONT PAGE.

		ϕP_n (kips)	ϕM_n (ft-kips)
AT AXIAL LOAD ONLY	=	3109	0
AT MAXIMUM LOAD	=	3109	5276
AT 0 % TENSION	=	3109	4799
AT 25 % TENSION	=	2720	7013
AT 50 % TENSION	=	2360	8058
AT ε_t = 0.002	=	1869	8695
AT BALANCED CONDITION	=	1856	8784
AT ε_t = 0.005	=	1498	10625
AT FLEXURE ONLY	=	0	2633
AT TENSION ONLY	=	-318	0

DESIGN FORCES P_u & M_u ARE ALSO PLOTTED ON THE INTERACTION DIAGRAM. FROM THE INTERACTION DIAGRAM.

THE ALLOWABLE MOMENT AT AN AXIAL LOAD P_u IS GIVEN BY

ϕM_n = 3258 kips. > M_u [Satisfactory]

where $\phi = Min\{0.9, Max[0.65 + (\varepsilon_t - 0.002)(250/3)\ ,\ 0.65]\}$ = 0.900 (ACI 318-14 21.2)

CHECK BOUNDARY ZONE REQUIREMENTS

AN EXEMPTION FROM THE PROVISION OF BOUNDARY ZONE CONFINEMENT REINFORCEMENT IS GIVEN BY ACI 318-14 18.10.6.2, 18.10.6.3, and 18.10.6.5(a) PROVIDED THAT

$c < (L\ h_w) / 1.5(600\ \delta_u)$ for ACI 21.9.6.2 apply or $f_c < 0.2\ f_c'$ for ACI 18.10.6.3 apply [Satisfactory]

where c = 17 in. (distance from the extreme compression fiber to neutral axis at P_u & M_n loads.)

δ_u = 0.8 in. (design displacement, assume $0.005h_w$ as a conservative short cut, see ACI 318-14 18.10.6.2.)

$f_c = (P_u / A) + (M_u\ y / I)$ = 0.288 ksi. (the maximum extreme fiber compressive stress at P_u & M_u loads.)

y = 104 in. (distance from the extreme compression fiber to neutral axis at P_u & M_u loads.)

A = 1708 in^2. (area of transformed section.)

I = 6134601 in^4. (moment of inertia of transformed section.)

Or the longitudinal reinforcement ratio at the wall end = 0.005 < $400 / f_y$ [Satisfactory]

HENCE BOUNDARY ZONE DETAIL REQUIREMENTS ARE NOT NECESSARY AND OMIT THE CALCULATIONS BELOW.

The boundary element length = MAX(c - 0.1L , 0.5 c) = 8.34 in. (ACI 318-14 18.10.6.4)

The maximum hoop spacing = MIN[B/4 , $6d_b$, 6 , $4+(14-h_x)/3$] = 8 in.o.c. (ACI 318-14 18.10.6.2 & 18.10.6.5)

$A_{sh,\ B\ DIR} = (0.09\ s\ h_c\ f_c')\ /\ f_{yh}$ = N/A in^2.

$A_{sh,\ L\ DIR} = (0.09\ s\ h_c\ f_c')\ /\ f_{yh}$ = N/A in^2.

THANG LE & ASSOCIATES TLA STRUCTURAL ENGINEERS

PROJECT :
CLIENT :
JOB NO. : DATE :

PAGE :
DESIGN BY :
REVIEW BY :

Special Reinforced Concrete Shear Wall Design Based on ACI 318-14 & 2016 CBC Chapter A — NS1

INPUT DATA

CONCRETE STRENGTH (ACI 318 19.2.1.1)	f_c' =	4	ksi, (28 MPa)	
REBAR YIELD STRESS	f_y =	60	ksi, (414 MPa)	
FACTORED AXIAL LOAD	P_u =	66	kips, (294 kN)	
FACTORED MOMENT LOAD	M_u =	1787	ft-kips, (2423 kN-m)	
FACTORED SHEAR LOAD	V_u =	142	kips, (632 kN)	
LENGTH OF SHEAR WALL	L =	19	ft, (5.79 m)	
THICKNESS OF WALL	t =	8	in, (203 mm)	
DEPTH AT FLANGE	D =	8	in, (203 mm)	
WIDTH AT FLANGE	B =	8	in, (203 mm)	
TOTAL WALL HEIGHT TO TOP	h_w =	13	ft, (3.96 m)	
REINF. BARS AT BULB		1 # 5		
WALL DIST. HORIZ. REINF.		1 # 4 @ 10	in, (254 mm) o.c.	
WALL DIST. VERT. REINF.		1 # 5 @ 12	in, (305 mm) o.c.	
HOOP REINF - WIDTH, B, DIR.		1 legs of # 4		
HOOP REINF - LENGTH DIR.		1 legs of # 4		
WALL EFFECTIVELY CONTINUOUS ?		Yes	(ACI 18.10.6.2 apply)	

DESIGN SUMMARY

SHEAR WALL LENGTH	L =	19.00	ft, (5.79 m)	
SHEAR WALL THICKNESS	t =	8.00	in, (203 mm)	
END REINFORCING	1 # 5			
WALL HORIZ. REINF	1 # 4 @ 10		in. (254 mm), o.c.	
WALL VERT. REINF	1 # 5 @ 12		in. (305 mm), o.c.	
HOOP REINF - WIDTH, B, DIR.				
HOOP REINF - LENGTH DIR.				

THE WALL DESIGN IS ADEQUATE

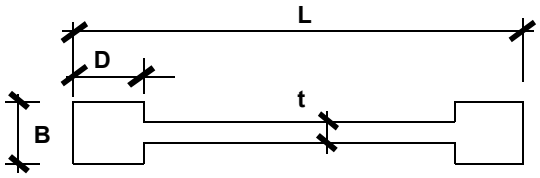

ANALYSIS

DETERMINE WHETHER THE WALL CAN RESIST SEISMIC LOADS (2016 CBC 1905A)

P_u = 66 k < $0.35\ A_g\ f_c'$ = 2554 k [Satisfactory]

where A_g = 1824 in^2.

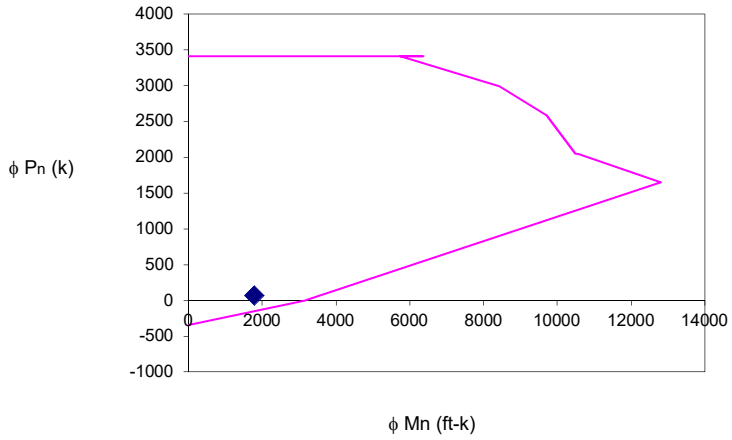

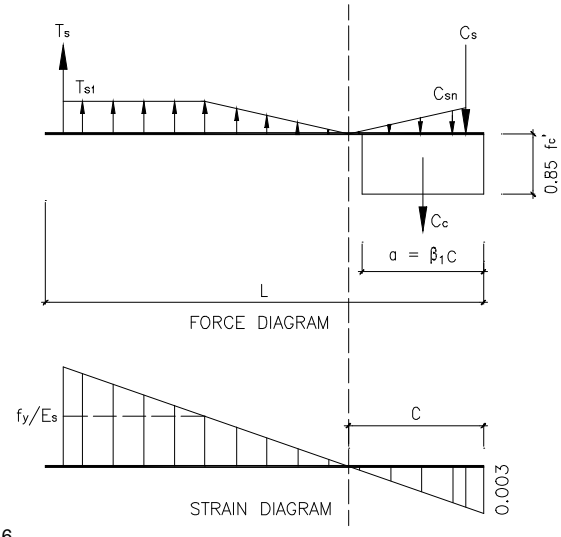

CHECK MINIMUM REINFORCEMENT RATIOS AND SPACING (ACI 318-14 18.10.2.1 & 11.6. . ,

$(\rho_t)_{min.}$ = 0.0025 [for $A_{cv}\,(f_c')^{0.5}$ = 115.36 kips < Vu , and bar size # 4 horizontal]

$(\rho_l)_{min.}$ = 0.0025 [for $A_{cv}\,(f_c')^{0.5}$ = 115.36 kips < Vu , and bar size # 5 vertical]

$(\rho_t)_{provd.}$ = 0.0025 > $\rho(_t)_{min.}$ [Satisfactory]

$(\rho_l)_{provd.}$ = 0.0032 > $(\rho_l)_{min.}$ [Satisfactory]

where A_{cv} = 1824 in^2 (gross area of concrete section bounded by web thickness and length in the shear direction)

The proposed spacing is less than the maximum permissible value of 18 in and is satisfactory. Since wall V_u < $2\,A_{cv}\,(f_c')^{0.5}$, one curtain reinforcement required. (ACI 318-14 18.10.2.2)

CHECK SHEAR CAPACITY (ACI 318-14 18.10.4.1 & 18.10.4.4)

ϕV_n =MIN [$\phi\,A_{cv}\,(\alpha_c\,(f_c')^{0.5} + \rho_t\,f_y)$, $\phi\,8\,A_{cv}\,(f_c')^{0.5}$] = 371.81 kips > V_u [Satisfactory]

where ϕ = 0.60 (conservatively, ACI 318-14 21.2)

α_c = 3.0 (for h_w / L = 0.68 < 1.5)

ρ_l > ρ_t [Satisfactory] (only for h_w / L > 2.0, ACI 318-14 18.10.4.3)

(cont'd)

CHECK FLEXURAL & AXIAL CAPACITY

MAXIMUM DESIGN AXIAL LOAD STRENGTH (ACI 318-14 18 & 22.4)

$\phi P_{max} = 0.8\ \phi\ [\ 0.85\ f_c'\ (A_g - A_{st}) + f_y A_{st}]$ = 3413.4 kips. > P_u [Satisfactory]

where ϕ = 0.65 (ACI 318-14 21.2)

A_{st} = 6.41 in^2.

DESIGN MOMENT CAPACITY AT MAXIMUM AXIAL LOAD STRENGTH ARE FROM 0 TO 6359 ft-kips.

FOR THE BALANCED STRAIN CONDITION UNDER COMBINED FLEXURE AND AXIAL LOAD, THE MAXIMUM STRAIN IN THE CONCRETE AND IN THE TENSION REINFORCEMENT MUST SIMULTANEOUSLY REACH THE VALUES SPECIFIED IN ACI 318-14 21.2.2

AS ε_c = 0.003 AND $\varepsilon_t = f_y / E_s$ = 0.002069 . THE DEPTH TO THE NEUTRAL AXIS AND EQUIVALENT RECTANGULAR CONCRETE STRESS BLOCK ARE GIVEN BY

$C_b = d\ \varepsilon_c / (\varepsilon_c + \varepsilon_s)$ = 133 in $a = C_b\ \beta_1$ = 113 in β_1 = 0.85 (ACI 318-14 22.2.2.4.3)

$\phi = 0.65 + (\varepsilon_t - 0.002)(250/3)$ = 0.656 (ACI 318-14 21.2) d = (L - 0.5D) = 224 in

DESIGN AXIAL AND MOMENT CAPACITIES AT THE BALANCED STRAIN CONDITION ARE 2042 kips AND 10582 ft-kips.

IN ACCORDANCE WITH ACI 318-14 21.2 THE DESIGN MOMENT CAPACITY WITHOUT AXIAL LOAD IS

$\phi M_n = 0.9\ M_n$ = 3146 kips.

TO KEEP TENSION SECTION WITH SHEAR CAPACITY PER ACI 11.5.4.6, THE PURE AXIAL TENSION CAPACITY IS

$-\phi P_n = -0.9\ MIN(A_{st} F_y\ ,\ 3.3\ f_c'^{0.5}\ 4\ L\ t\ )$ = -346 kips.

SUMMARY OF LOAD VERSUS MOMENT CAPACITIES ARE SHOWN IN THE TABLE BELOW, AND THEY ARE PLOTTED ON THE INTERACTION DIAGRAM AT FRONT PAGE.

		ϕP_n (kips)	ϕM_n (ft-kips)
AT AXIAL LOAD ONLY	=	3413	0
AT MAXIMUM LOAD	=	3413	6359
AT 0 % TENSION	=	3413	5745
AT 25 % TENSION	=	2992	8431
AT 50 % TENSION	=	2595	9700
AT ε_t = 0.002	=	2056	10475
AT BALANCED CONDITION	=	2042	10582
AT ε_t = 0.005	=	1649	12811
AT FLEXURE ONLY	=	0	3146
AT TENSION ONLY	=	-346	0

DESIGN FORCES P_u & M_u ARE ALSO PLOTTED ON THE INTERACTION DIAGRAM. FROM THE INTERACTION DIAGRAM.

THE ALLOWABLE MOMENT AT AN AXIAL LOAD P_u IS GIVEN BY

ϕM_n = 3695 kips. > M_u [Satisfactory]

where $\phi = Min\{0.9, Max[0.65 + (\varepsilon_t - 0.002)(250/3)\ ,\ 0.65]\}$ = 0.900 (ACI 318-14 21.2)

CHECK BOUNDARY ZONE REQUIREMENTS

AN EXEMPTION FROM THE PROVISION OF BOUNDARY ZONE CONFINEMENT REINFORCEMENT IS GIVEN BY ACI 318-14 18.10.6.2, 18.10.6.3, and 18.10.6.5(a) PROVIDED THAT

$c < (L\ h_w) / 1.5(600\ \delta_u)$ for ACI 21.9.6.2 apply or $f_c < 0.2\ f_c'$ for ACI 18.10.6.3 apply [Satisfactory]

where c = 17 in. (distance from the extreme compression fiber to neutral axis at P_u & M_n loads.)

δ_u = 0.8 in. (design displacement, assume $0.005h_w$ as a conservative short cut, see ACI 318-14 18.10.6.2.)

$f_c = (P_u / A) + (M_u\ y / I)$ = 0.336 ksi. (the maximum extreme fiber compressive stress at P_u & M_u loads.)

y = 114 in. (distance from the extreme compression fiber to neutral axis at P_u & M_u loads.)

A = 1876 in^2. (area of transformed section.)

I = 8124829 in^4. (moment of inertia of transformed section.)

Or the longitudinal reinforcement ratio at the wall end = 0.005 < $400 / f_y$ [Satisfactory]

HENCE BOUNDARY ZONE DETAIL REQUIREMENTS ARE NOT NECESSARY AND OMIT THE CALCULATIONS BELOW.

The boundary element length = MAX(c - 0.1L , 0.5 c) = 8.58 in. (ACI 318-14 18.10.6.4)

The maximum hoop spacing = MIN[B/4 , $6d_b$, 6 , $4+(14-h_x)/3$] = 8 in.o.c. (ACI 318-14 18.10.6.2 & 18.10.6.5)

$A_{sh,\ B\ DIR} = (0.09\ s\ h_c\ f_c')\ /\ f_{yh}$ = N/A in^2.

$A_{sh,\ L\ DIR} = (0.09\ s\ h_c\ f_c')\ /\ f_{yh}$ = N/A in^2.

THANG LE & ASSOCIATES TLA STRUCTURAL ENGINEERS

PROJECT :
CLIENT :
JOB NO. : DATE :

PAGE :
DESIGN BY :
REVIEW BY :

Special Reinforced Concrete Shear Wall Design Based on ACI 318-14 & 2016 CBC Chapter A — NS2

INPUT DATA

CONCRETE STRENGTH (ACI 318 19.2.1.1)	f_c' =	4	ksi, (28 MPa)	
REBAR YIELD STRESS	f_y =	60	ksi, (414 MPa)	
FACTORED AXIAL LOAD	P_u =	506	kips, (2251 kN)	
FACTORED MOMENT LOAD	M_u =	5461	ft-kips, (7404 kN-m)	
FACTORED SHEAR LOAD	V_u =	425	kips, (1890 kN)	
LENGTH OF SHEAR WALL	L =	38	ft, (11.58 m)	
THICKNESS OF WALL	t =	8	in, (203 mm)	
DEPTH AT FLANGE	D =	8	in, (203 mm)	
WIDTH AT FLANGE	B =	8	in, (203 mm)	
TOTAL WALL HEIGHT TO TOP	h_w =	13	ft, (3.96 m)	

REINF. BARS AT BULB		1	#	5		
WALL DIST. HORIZ. REINF.	1	#	4	@	10	in, (254 mm) o.c.
WALL DIST. VERT. REINF.	1	#	5	@	12	in, (305 mm) o.c.
HOOP REINF - WIDTH, B, DIR.	1	legs of	#	4		
HOOP REINF - LENGTH DIR.	1	legs of	#	4		
WALL EFFECTIVELY CONTINUOUS ?				Yes	(ACI 18.10.6.2 apply)	

DESIGN SUMMARY

SHEAR WALL LENGTH	L =	38.00	ft, (11.58 m)
SHEAR WALL THICKNESS	t =	8.00	in, (203 mm)

END REINFORCING	1	#	5			
WALL HORIZ. REINF	1	#	4	@	10	in. (254 mm), o.c.
WALL VERT. REINF	1	#	5	@	12	in. (305 mm), o.c.
HOOP REINF - WIDTH, B, DIR.						
HOOP REINF - LENGTH DIR.						

THE WALL DESIGN IS ADEQUATE

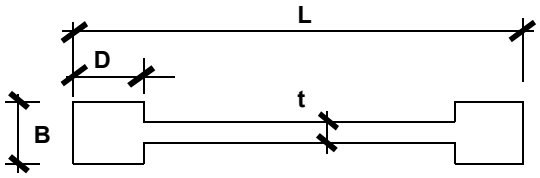

ANALYSIS

DETERMINE WHETHER THE WALL CAN RESIST SEISMIC LOADS (2016 CBC 1905A)

P_u = 506 k < $0.35\ A_g\ f_c'$ = 5107 k [Satisfactory]

where A_g = 3648 in^2.

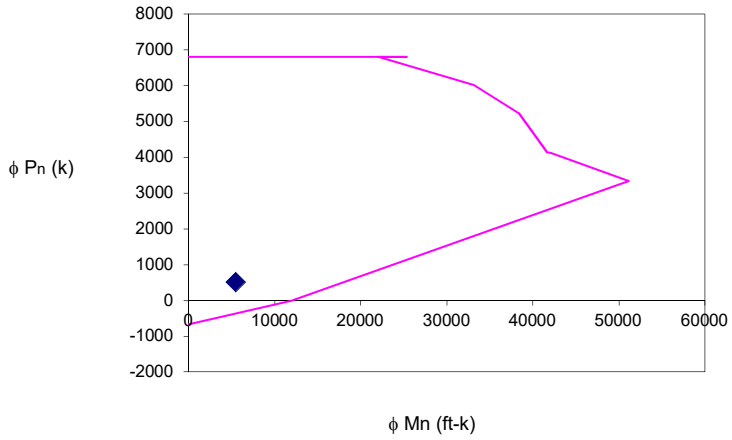

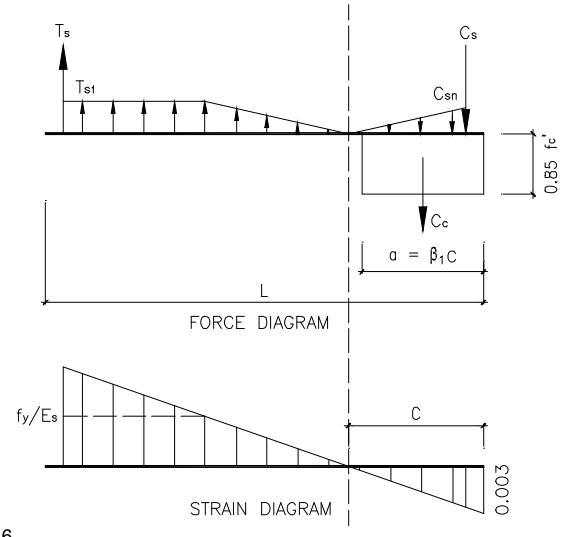

CHECK MINIMUM REINFORCEMENT RATIOS AND SPACING (ACI 318-14 18.10.2.1 & 11.6. . ,

$(\rho_t)_{min.}$ = 0.0025 [for $A_{cv}\,(f_c')^{0.5}$ = 230.72 kips < Vu , and bar size # 4 horizontal]

$(\rho_l)_{min.}$ = 0.0025 [for $A_{cv}\,(f_c')^{0.5}$ = 230.72 kips < Vu , and bar size # 5 vertical]

$(\rho_t)_{provd.}$ = 0.0025 > $\rho(_t)_{min.}$ [Satisfactory]

$(\rho_l)_{provd.}$ = 0.0032 > $(\rho_l)_{min.}$ [Satisfactory]

where A_{cv} = 3648 in^2 (gross area of concrete section bounded by web thickness and length in the shear direction)

The proposed spacing is less than the maximum permissible value of 18 in and is satisfactory. Since wall V_u < $2\,A_{cv}\,(f_c')^{0.5}$, one curtain reinforcement required. (ACI 318-14 18.10.2.2)

CHECK SHEAR CAPACITY (ACI 318-14 18.10.4.1 & 18.10.4.4)

ϕV_n =MIN [$\phi\,A_{cv}\,(\alpha_c\,(f_c')^{0.5} + \rho_t\,f_y)$, $\phi\,8\,A_{cv}\,(f_c')^{0.5}$] = 743.62 kips > V_u [Satisfactory]

where ϕ = 0.60 (conservatively, ACI 318-14 21.2)

α_c = 3.0 (for h_w / L = 0.34 < 1.5)

ρ_l > ρ_t [Satisfactory] (only for h_w / L > 2.0, ACI 318-14 18.10.4.3)

(cont'd)

CHECK FLEXURAL & AXIAL CAPACITY

MAXIMUM DESIGN AXIAL LOAD STRENGTH (ACI 318-14 18 & 22.4)

$\phi P_{max} = 0.8\ \phi\ [\ 0.85\ f_c'\ (A_g - A_{st}) + f_y A_{st}]$ = 6811.6 kips. > P_u [Satisfactory]

where ϕ = 0.65 (ACI 318-14 21.2)

A_{st} = 12.30 in^2.

DESIGN MOMENT CAPACITY AT MAXIMUM AXIAL LOAD STRENGTH ARE FROM 0 TO 25339 ft-kips.

FOR THE BALANCED STRAIN CONDITION UNDER COMBINED FLEXURE AND AXIAL LOAD, THE MAXIMUM STRAIN IN THE CONCRETE AND IN THE TENSION REINFORCEMENT MUST SIMULTANEOUSLY REACH THE VALUES SPECIFIED IN ACI 318-14 21.2.2

AS ε_c = 0.003 AND $\varepsilon_t = f_y / E_s$ = 0.002069 . THE DEPTH TO THE NEUTRAL AXIS AND EQUIVALENT RECTANGULAR CONCRETE STRESS BLOCK ARE GIVEN BY

$C_b = d\ \varepsilon_c / (\varepsilon_c + \varepsilon_s)$ = 268 in $a = C_b\ \beta_1$ = 227 in β_1 = 0.85 (ACI 318-14 22.2.2.4.3)

$\phi = 0.65 + (\varepsilon_t - 0.002)(250/3)$ = 0.656 (ACI 318-14 21.2) d = (L - 0.5D) = 452 in

DESIGN AXIAL AND MOMENT CAPACITIES AT THE BALANCED STRAIN CONDITION ARE 4123 kips AND 42055 ft-kips.

IN ACCORDANCE WITH ACI 318-14 21.2 THE DESIGN MOMENT CAPACITY WITHOUT AXIAL LOAD IS

$\phi M_n = 0.9\ M_n$ = 11997 kips.

TO KEEP TENSION SECTION WITH SHEAR CAPACITY PER ACI 11.5.4.6, THE PURE AXIAL TENSION CAPACITY IS

$-\phi P_n = -0.9\ MIN(A_{st} F_y\ ,\ 3.3\ f_c'^{0.5}\ 4\ L\ t\ )$ = -664 kips.

SUMMARY OF LOAD VERSUS MOMENT CAPACITIES ARE SHOWN IN THE TABLE BELOW, AND THEY ARE PLOTTED ON THE INTERACTION DIAGRAM AT FRONT PAGE.

		ϕP_n (kips)	ϕM_n (ft-kips)
AT AXIAL LOAD ONLY	=	6812	0
AT MAXIMUM LOAD	=	6812	25339
AT 0 % TENSION	=	6812	22072
AT 25 % TENSION	=	6027	33139
AT 50 % TENSION	=	5232	38387
AT ε_t = 0.002	=	4150	41625
AT BALANCED CONDITION	=	4123	42055
AT ε_t = 0.005	=	3341	51127
AT FLEXURE ONLY	=	0	11997
AT TENSION ONLY	=	-664	0

DESIGN FORCES P_u & M_u ARE ALSO PLOTTED ON THE INTERACTION DIAGRAM. FROM THE INTERACTION DIAGRAM.

THE ALLOWABLE MOMENT AT AN AXIAL LOAD P_u IS GIVEN BY

ϕM_n = 20173 kips. > M_u [Satisfactory]

where $\phi = Min\{0.9, Max[0.65 + (\varepsilon_t - 0.002)(250/3)\ ,\ 0.65]\}$ = 0.900 (ACI 318-14 21.2)

CHECK BOUNDARY ZONE REQUIREMENTS

AN EXEMPTION FROM THE PROVISION OF BOUNDARY ZONE CONFINEMENT REINFORCEMENT IS GIVEN BY ACI 318-14 18.10.6.2, 18.10.6.3, and 18.10.6.5(a) PROVIDED THAT

$c < (L\ h_w) / 1.5(600\ \delta_u)$ for ACI 21.9.6.2 apply or $f_c < 0.2\ f_c'$ for ACI 18.10.6.3 apply [Satisfactory]

where c = 49 in. (distance from the extreme compression fiber to neutral axis at P_u & M_n loads.)

δ_u = 0.8 in. (design displacement, assume $0.005h_w$ as a conservative short cut, see ACI 318-14 18.10.6.2.)

$f_c = (P_u / A) + (M_u\ y / I)$ = 0.365 ksi. (the maximum extreme fiber compressive stress at P_u & M_u loads.)

y = 228 in. (distance from the extreme compression fiber to neutral axis at P_u & M_u loads.)

A = 3747 in^2. (area of transformed section.)

I = 64926616 in^4. (moment of inertia of transformed section.)

Or the longitudinal reinforcement ratio at the wall end = 0.005 < $400 / f_y$ [Satisfactory]

HENCE BOUNDARY ZONE DETAIL REQUIREMENTS ARE NOT NECESSARY AND OMIT THE CALCULATIONS BELOW.

The boundary element length = MAX(c - 0.1L , 0.5 c) = 24.73 in. (ACI 318-14 18.10.6.4)

The maximum hoop spacing = MIN[B/4 , $6d_b$, 6 , $4+(14-h_x)/3$] = 8 in.o.c. (ACI 318-14 18.10.6.2 & 18.10.6.5)

$A_{sh,\ B\ DIR} = (0.09\ s\ h_c\ f_c')\ /\ f_{yh}$ = N/A in^2.

$A_{sh,\ L\ DIR} = (0.09\ s\ h_c\ f_c')\ /\ f_{yh}$ = N/A in^2.

THANG LE & ASSOCIATES TLA STRUCTURAL ENGINEERS

PROJECT :
CLIENT :
JOB NO. : DATE :

PAGE :
DESIGN BY :
REVIEW BY :

Special Reinforced Concrete Shear Wall Design Based on ACI 318-14 & 2016 CBC Chapter A — NS3

INPUT DATA

CONCRETE STRENGTH (ACI 318 19.2.1.1)	f_c' =	4	*ksi, (28 MPa)*	
REBAR YIELD STRESS	f_y =	60	*ksi, (414 MPa)*	
FACTORED AXIAL LOAD	P_u =	18	*kips, (80 kN)*	
FACTORED MOMENT LOAD	M_u =	187	*ft-kips, (254 kN-m)*	
FACTORED SHEAR LOAD	V_u =	17.1	*kips, (76 kN)*	
LENGTH OF SHEAR WALL	L =	6.75	*ft, (2.06 m)*	
THICKNESS OF WALL	t =	8	*in, (203 mm)*	
DEPTH AT FLANGE	D =	8	*in, (203 mm)*	
WIDTH AT FLANGE	B =	8	*in, (203 mm)*	
TOTAL WALL HEIGHT TO TOP	h_w =	13	*ft, (3.96 m)*	
REINF. BARS AT BULB		1	# 5	
WALL DIST. HORIZ. REINF.	1	#	4 @ 10	*in, (254 mm) o.c.*
WALL DIST. VERT. REINF.	1	#	5 @ 12	*in, (305 mm) o.c.*
HOOP REINF - WIDTH, B, DIR.	1	legs of #	4	
HOOP REINF - LENGTH DIR.	1	legs of #	4	
WALL EFFECTIVELY CONTINUOUS ?			Yes	(ACI 18.10.6.2 apply)

DESIGN SUMMARY

SHEAR WALL LENGTH	L =	6.75	*ft, (2.06 m)*		
SHEAR WALL THICKNESS	t =	8.00	*in, (203 mm)*		
END REINFORCING	1	#	5		
WALL HORIZ. REINF	1 #	4	@	10	*in. (254 mm), o.c.*
WALL VERT. REINF	1 #	5	@	12	*in. (305 mm), o.c.*
HOOP REINF - WIDTH, B, DIR.					
HOOP REINF - LENGTH DIR.					

THE WALL DESIGN IS ADEQUATE

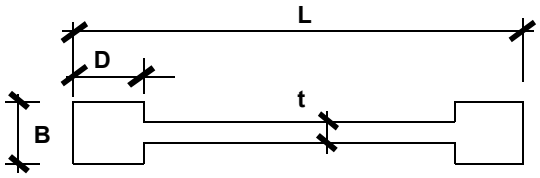

ANALYSIS

DETERMINE WHETHER THE WALL CAN RESIST SEISMIC LOADS (2016 CBC 1905A)

Pu = 18 k < 0.35 A_g f_c' = 907 k [Satisfactory]

where A_g = 648 in^2.

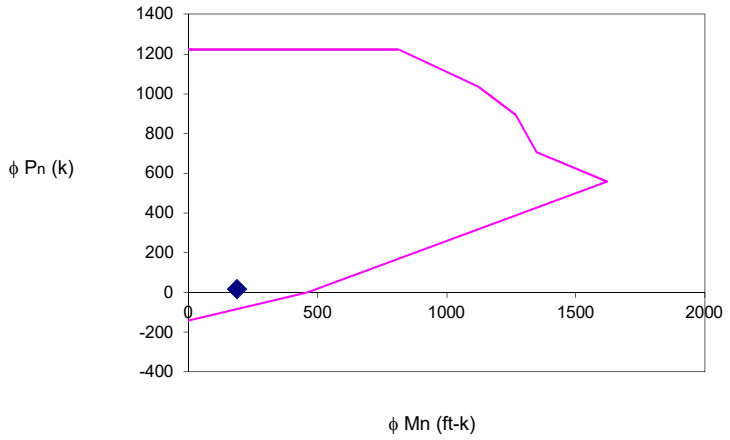

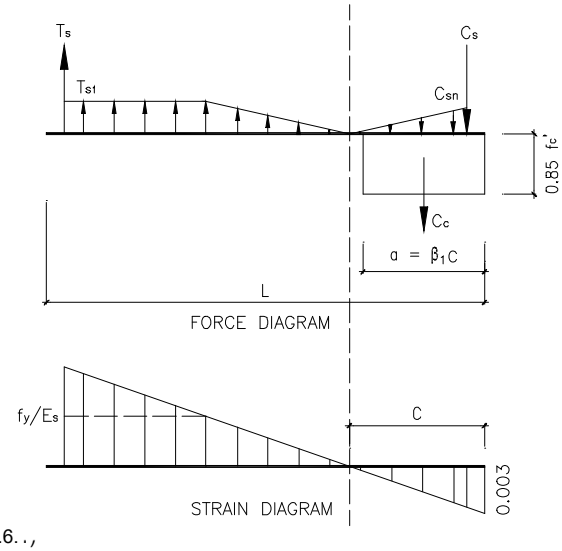

CHECK MINIMUM REINFORCEMENT RATIOS AND SPACING (ACI 318-14 18.10.2.1 & 11.6. . ,

$(\rho_t)_{min.}$ = 0.0020 [for $A_{cv}(f_c')^{0.5}$ = 40.98 kips > Vu , and bar size # 4 horizontal]

$(\rho_l)_{min.}$ = 0.0012 [for $A_{cv}(f_c')^{0.5}$ = 40.98 kips > Vu , and bar size # 5 vertical]

$(\rho_t)_{provd.}$ = 0.0025 > $(\rho_t)_{min.}$ [Satisfactory]

$(\rho_l)_{provd.}$ = 0.0032 > $(\rho_l)_{min.}$ [Satisfactory]

where A_{cv} = 648 in^2 (gross area of concrete section bounded by web thickness and length in the shear direction)

The proposed spacing is less than the maximum permissible value of 18 in and is satisfactory. Since wall V_u < $2A_{cv}(f_c')^{0.5}$, one curtain reinforcement required. (ACI 318-14 18.10.2.2)

CHECK SHEAR CAPACITY (ACI 318-14 18.10.4.1 & 18.10.4.4)

ϕV_n =MIN [$\phi A_{cv}(\alpha_c (f_c')^{0.5} + \rho_t f_y)$, $\phi 8 A_{cv}(f_c')^{0.5}$] = 111.14 kips > V_u [Satisfactory]

where ϕ = 0.60 (conservatively, ACI 318-14 21.2)

α_c = 2.1 (for h_w / L = 1.93 @ [1.5, 2])

ρ_l > ρ_t [Satisfactory] (only for h_w / L > 2.0, ACI 318-14 18.10.4.3)

(cont'd)

CHECK FLEXURAL & AXIAL CAPACITY

MAXIMUM DESIGN AXIAL LOAD STRENGTH (ACI 318-14 18 & 22.4)

$\phi P_{max} = 0.8\ \phi\ [\ 0.85\ f_c'\ (A_g - A_{st}) + f_y A_{st}]$ = 1222.5 kips. > P_u [Satisfactory]

where ϕ = 0.65 (ACI 318-14 21.2)

A_{st} = 2.61 in^2.

DESIGN MOMENT CAPACITY AT MAXIMUM AXIAL LOAD STRENGTH ARE FROM 0 TO 812 ft-kips.

FOR THE BALANCED STRAIN CONDITION UNDER COMBINED FLEXURE AND AXIAL LOAD, THE MAXIMUM STRAIN IN THE CONCRETE AND IN THE TENSION REINFORCEMENT MUST SIMULTANEOUSLY REACH THE VALUES SPECIFIED IN ACI 318-14 21.2.2

AS ε_c = 0.003 AND $\varepsilon_t = f_y / E_s$ = 0.002069 . THE DEPTH TO THE NEUTRAL AXIS AND EQUIVALENT RECTANGULAR CONCRETE STRESS BLOCK ARE GIVEN BY

$C_b = d\ \varepsilon_c / (\varepsilon_c + \varepsilon_s)$ = 46 in $a = C_b\ \beta_1$ = 39 in β_1 = 0.85 (ACI 318-14 22.2.2.4.3)

$\phi = 0.65 + (\varepsilon_t - 0.002)(250/3)$ = 0.656 (ACI 318-14 21.2) d = (L - 0.5D) = 77 in

DESIGN AXIAL AND MOMENT CAPACITIES AT THE BALANCED STRAIN CONDITION ARE 700 kips AND 1360 ft-kips.

IN ACCORDANCE WITH ACI 318-14 21.2 THE DESIGN MOMENT CAPACITY WITHOUT AXIAL LOAD IS

$\phi M_n = 0.9\ M_n$ = 461 kips.

TO KEEP TENSION SECTION WITH SHEAR CAPACITY PER ACI 11.5.4.6, THE PURE AXIAL TENSION CAPACITY IS

$-\phi P_n = -0.9\ MIN(A_{st} F_y\ ,\ 3.3\ f_c'^{0.5}\ 4\ L\ t\ )$ = -141 kips.

SUMMARY OF LOAD VERSUS MOMENT CAPACITIES ARE SHOWN IN THE TABLE BELOW, AND THEY ARE PLOTTED ON THE INTERACTION DIAGRAM AT FRONT PAGE.

		ϕP_n (kips)	ϕM_n (ft-kips)
AT AXIAL LOAD ONLY	=	1222	0
AT MAXIMUM LOAD	=	1222	812
AT 0 % TENSION	=	1217	823
AT 25 % TENSION	=	1034	1125
AT 50 % TENSION	=	895	1267
AT ε_t = 0.002	=	705	1347
AT BALANCED CONDITION	=	700	1360
AT ε_t = 0.005	=	557	1622
AT FLEXURE ONLY	=	0	461
AT TENSION ONLY	=	-141	0

DESIGN FORCES P_u & M_u ARE ALSO PLOTTED ON THE INTERACTION DIAGRAM. FROM THE INTERACTION DIAGRAM.

THE ALLOWABLE MOMENT AT AN AXIAL LOAD P_u IS GIVEN BY

ϕM_n = 514 kips. > M_u [Satisfactory]

where $\phi = Min\{0.9, Max[0.65 + (\varepsilon_t - 0.002)(250/3)\ ,\ 0.65]\}$ = 0.900 (ACI 318-14 21.2)

CHECK BOUNDARY ZONE REQUIREMENTS

AN EXEMPTION FROM THE PROVISION OF BOUNDARY ZONE CONFINEMENT REINFORCEMENT IS GIVEN BY ACI 318-14 18.10.6.2, 18.10.6.3, and 18.10.6.5(a) PROVIDED THAT

$c < (L\ h_w) / 1.5(600\ \delta_u)$ for ACI 21.9.6.2 apply or $f_c < 0.2\ f_c'$ for ACI 18.10.6.3 apply [Satisfactory]

where c = 7 in. (distance from the extreme compression fiber to neutral axis at P_u & M_n loads.)

δ_u = 0.8 in. (design displacement, assume $0.005h_w$ as a conservative short cut, see ACI 318-14 18.10.6.2.)

$f_c = (P_u / A) + (M_u\ y / I)$ = 0.275 ksi. (the maximum extreme fiber compressive stress at P_u & M_u loads.)

y = 41 in. (distance from the extreme compression fiber to neutral axis at P_u & M_u loads.)

A = 669 in^2. (area of transformed section.)

I = 365770 in^4. (moment of inertia of transformed section.)

Or the longitudinal reinforcement ratio at the wall end = 0.005 < $400 / f_y$ [Satisfactory]

HENCE BOUNDARY ZONE DETAIL REQUIREMENTS ARE NOT NECESSARY AND OMIT THE CALCULATIONS BELOW.

The boundary element length = MAX(c - 0.1L , 0.5 c) = 3.34 in. (ACI 318-14 18.10.6.4)

The maximum hoop spacing = MIN[B/4 , $6d_b$, 6 , $4+(14-h_x)/3$] = 8 in.o.c. (ACI 318-14 18.10.6.2 & 18.10.6.5)

$A_{sh,\ B\ DIR} = (0.09\ s\ h_c\ f_c')\ /\ f_{yh}$ = N/A in^2.

$A_{sh,\ L\ DIR} = (0.09\ s\ h_c\ f_c')\ /\ f_{yh}$ = N/A in^2.

THANG LE & ASSOCIATES TLA STRUCTURAL ENGINEERS

PROJECT :
CLIENT :
JOB NO. : DATE :

PAGE :
DESIGN BY :
REVIEW BY :

Special Reinforced Concrete Shear Wall Design Based on ACI 318-14 & 2016 CBC Chapter A — NS4

INPUT DATA

CONCRETE STRENGTH (ACI 318 19.2.1.1)	f_c' =	4	ksi, (28 MPa)	
REBAR YIELD STRESS	f_y =	60	ksi, (414 MPa)	
FACTORED AXIAL LOAD	P_u =	47	kips, (209 kN)	
FACTORED MOMENT LOAD	M_u =	242	ft-kips, (328 kN-m)	
FACTORED SHEAR LOAD	V_u =	31.3	kips, (139 kN)	
LENGTH OF SHEAR WALL	L =	7.25	ft, (2.21 m)	
THICKNESS OF WALL	t =	8	in, (203 mm)	
DEPTH AT FLANGE	D =	8	in, (203 mm)	
WIDTH AT FLANGE	B =	8	in, (203 mm)	
TOTAL WALL HEIGHT TO TOP	h_w =	13	ft, (3.96 m)	
REINF. BARS AT BULB		1	# 5	
WALL DIST. HORIZ. REINF.	1	#	4 @ 10	in, (254 mm) o.c.
WALL DIST. VERT. REINF.	1	#	5 @ 12	in, (305 mm) o.c.
HOOP REINF - WIDTH, B, DIR.	1	legs of #	4	
HOOP REINF - LENGTH DIR.	1	legs of #	4	
WALL EFFECTIVELY CONTINUOUS ?			Yes	(ACI 18.10.6.2 apply)

DESIGN SUMMARY

SHEAR WALL LENGTH	L =	7.25	ft, (2.21 m)	
SHEAR WALL THICKNESS	t =	8.00	in, (203 mm)	
END REINFORCING	1	# 5		
WALL HORIZ. REINF	1 #	4	@ 10	in. (254 mm), o.c.
WALL VERT. REINF	1 #	5	@ 12	in. (305 mm), o.c.
HOOP REINF - WIDTH, B, DIR.				
HOOP REINF - LENGTH DIR.				

THE WALL DESIGN IS ADEQUATE

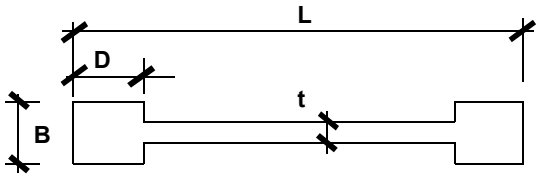

ANALYSIS

DETERMINE WHETHER THE WALL CAN RESIST SEISMIC LOADS (2016 CBC 1905A)

Pu = 47 k < 0.35 A_g f_c' = 974 k [Satisfactory]

where A_g = 696 in^2.

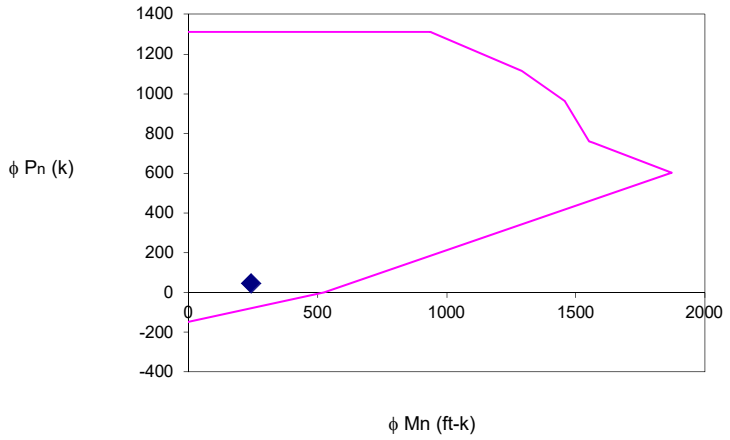

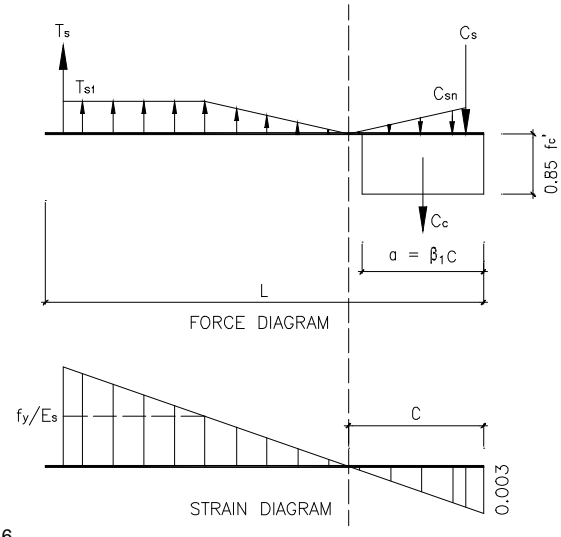

CHECK MINIMUM REINFORCEMENT RATIOS AND SPACING (ACI 318-14 18.10.2.1 & 11.6. . ,

$(\rho_t)_{min.}$ = 0.0020 [for $A_{cv}(f_c')^{0.5}$ = 44.02 kips > Vu , and bar size # 4 horizontal]

$(\rho_l)_{min.}$ = 0.0012 [for $A_{cv}(f_c')^{0.5}$ = 44.02 kips > Vu , and bar size # 5 vertical]

$(\rho_t)_{provd.}$ = 0.0025 > $(\rho_t)_{min.}$ [Satisfactory]

$(\rho_l)_{provd.}$ = 0.0032 > $(\rho_l)_{min.}$ [Satisfactory]

where A_{cv} = 696 in^2 (gross area of concrete section bounded by web thickness and length in the shear direction)

The proposed spacing is less than the maximum permissible value of 18 in and is satisfactory. Since wall V_u < $2 A_{cv}(f_c')^{0.5}$, one curtain reinforcement required. (ACI 318-14 18.10.2.2)

CHECK SHEAR CAPACITY (ACI 318-14 18.10.4.1 & 18.10.4.4)

ϕV_n =MIN [$\phi A_{cv}(\alpha_c (f_c')^{0.5} + \rho_t f_y)$, $\phi 8 A_{cv}(f_c')^{0.5}$] = 126.39 kips > V_u [Satisfactory]

where ϕ = 0.60 (conservatively, ACI 318-14 21.2)

α_c = 2.4 (for h_w / L = 1.79 @ [1.5, 2])

ρ_l > ρ_t [Satisfactory] (only for h_w / L > 2.0, ACI 318-14 18.10.4.3)

(cont'd)

CHECK FLEXURAL & AXIAL CAPACITY

MAXIMUM DESIGN AXIAL LOAD STRENGTH (ACI 318-14 18 & 22.4)

$\phi P_{max} = 0.8\ \phi\ [\ 0.85\ f_c'\ (A_g - A_{st}) + f_y A_{st}]$ = 1311.9 kips. > P_u [Satisfactory]

where ϕ = 0.65 (ACI 318-14 21.2)

A_{st} = 2.76 in^2.

DESIGN MOMENT CAPACITY AT MAXIMUM AXIAL LOAD STRENGTH ARE FROM 0 TO 936 ft-kips.

FOR THE BALANCED STRAIN CONDITION UNDER COMBINED FLEXURE AND AXIAL LOAD, THE MAXIMUM STRAIN IN THE CONCRETE AND IN THE TENSION REINFORCEMENT MUST SIMULTANEOUSLY REACH THE VALUES SPECIFIED IN ACI 318-14 21.2.2

AS ε_c = 0.003 AND $\varepsilon_t = f_y / E_s$ = 0.002069 . THE DEPTH TO THE NEUTRAL AXIS AND EQUIVALENT RECTANGULAR CONCRETE STRESS BLOCK ARE GIVEN BY

$C_b = d\ \varepsilon_c / (\varepsilon_c + \varepsilon_s)$ = 49 in $a = C_b\ \beta_1$ = 42 in β_1 = 0.85 (ACI 318-14 22.2.2.4.3)

$\phi = 0.65 + (\varepsilon_t - 0.002)(250/3)$ = 0.656 (ACI 318-14 21.2) d = (L - 0.5D) = 83 in

DESIGN AXIAL AND MOMENT CAPACITIES AT THE BALANCED STRAIN CONDITION ARE 755 kips AND 1566 ft-kips.

IN ACCORDANCE WITH ACI 318-14 21.2 THE DESIGN MOMENT CAPACITY WITHOUT AXIAL LOAD IS

$\phi M_n = 0.9\ M_n$ = 524 kips.

TO KEEP TENSION SECTION WITH SHEAR CAPACITY PER ACI 11.5.4.6, THE PURE AXIAL TENSION CAPACITY IS

$-\phi P_n = -0.9\ MIN(A_{st} F_y\ ,\ 3.3\ f_c'^{0.5}\ 4\ L\ t\ )$ = -149 kips.

SUMMARY OF LOAD VERSUS MOMENT CAPACITIES ARE SHOWN IN THE TABLE BELOW, AND THEY ARE PLOTTED ON THE INTERACTION DIAGRAM AT FRONT PAGE.

		ϕP_n (kips)	ϕM_n (ft-kips)
AT AXIAL LOAD ONLY	=	1312	0
AT MAXIMUM LOAD	=	1312	936
AT 0 % TENSION	=	1311	937
AT 25 % TENSION	=	1114	1291
AT 50 % TENSION	=	965	1457
AT ε_t = 0.002	=	760	1551
AT BALANCED CONDITION	=	755	1566
AT ε_t = 0.005	=	602	1872
AT FLEXURE ONLY	=	0	524
AT TENSION ONLY	=	-149	0

DESIGN FORCES P_u & M_u ARE ALSO PLOTTED ON THE INTERACTION DIAGRAM. FROM THE INTERACTION DIAGRAM.

THE ALLOWABLE MOMENT AT AN AXIAL LOAD P_u IS GIVEN BY

ϕM_n = 669 kips. > M_u [Satisfactory]

where $\phi = Min\{0.9, Max[0.65 + (\varepsilon_t - 0.002)(250/3)\ ,\ 0.65]\}$ = 0.900 (ACI 318-14 21.2)

CHECK BOUNDARY ZONE REQUIREMENTS

AN EXEMPTION FROM THE PROVISION OF BOUNDARY ZONE CONFINEMENT REINFORCEMENT IS GIVEN BY ACI 318-14 18.10.6.2, 18.10.6.3, and 18.10.6.5(a) PROVIDED THAT

$c < (L\ h_w) / 1.5(600\ \delta_u)$ for ACI 21.9.6.2 apply or $f_c < 0.2\ f_c'$ for ACI 18.10.6.3 apply [Satisfactory]

where c = 8 in. (distance from the extreme compression fiber to neutral axis at P_u & M_n loads.)

δ_u = 0.8 in. (design displacement, assume $0.005h_w$ as a conservative short cut, see ACI 318-14 18.10.6.2.)

$f_c = (P_u / A) + (M_u\ y / I)$ = 0.344 ksi. (the maximum extreme fiber compressive stress at P_u & M_u loads.)

y = 44 in. (distance from the extreme compression fiber to neutral axis at P_u & M_u loads.)

A = 718 in^2. (area of transformed section.)

I = 453027 in^4. (moment of inertia of transformed section.)

Or the longitudinal reinforcement ratio at the wall end = 0.005 < $400 / f_y$ [Satisfactory]

HENCE BOUNDARY ZONE DETAIL REQUIREMENTS ARE NOT NECESSARY AND OMIT THE CALCULATIONS BELOW.

The boundary element length = MAX(c - 0.1L , 0.5 c) = 4.06 in. (ACI 318-14 18.10.6.4)

The maximum hoop spacing = MIN[B/4 , $6d_b$, 6 , $4+(14-h_x)/3$] = 8 in.o.c. (ACI 318-14 18.10.6.2 & 18.10.6.5)

$A_{sh,\ B\ DIR} = (0.09\ s\ h_c\ f_c')\ /\ f_{yh}$ = N/A in^2.

$A_{sh,\ L\ DIR} = (0.09\ s\ h_c\ f_c')\ /\ f_{yh}$ = N/A in^2.

THANG LE & ASSOCIATES TLA STRUCTURAL ENGINEERS

PROJECT :
CLIENT :
JOB NO. : DATE :

PAGE :
DESIGN BY :
REVIEW BY :

Special Reinforced Concrete Shear Wall Design Based on ACI 318-14 & 2016 CBC Chapter A — NS5

INPUT DATA

CONCRETE STRENGTH (ACI 318 19.2.1.1)	f_c' =	4	ksi, (28 MPa)	
REBAR YIELD STRESS	f_y =	60	ksi, (414 MPa)	
FACTORED AXIAL LOAD	P_u =	138	kips, (614 kN)	
FACTORED MOMENT LOAD	M_u =	973	ft-kips, (1319 kN-m)	
FACTORED SHEAR LOAD	V_u =	74.3	kips, (331 kN)	
LENGTH OF SHEAR WALL	L =	26	ft, (7.92 m)	
THICKNESS OF WALL	t =	8	in, (203 mm)	
DEPTH AT FLANGE	D =	8	in, (203 mm)	
WIDTH AT FLANGE	B =	8	in, (203 mm)	
TOTAL WALL HEIGHT TO TOP	h_w =	13	ft, (3.96 m)	
REINF. BARS AT BULB		1 # 5		
WALL DIST. HORIZ. REINF.		1 # 4 @ 10	in, (254 mm) o.c.	
WALL DIST. VERT. REINF.		1 # 5 @ 12	in, (305 mm) o.c.	
HOOP REINF - WIDTH, B, DIR.		1 legs of # 4		
HOOP REINF - LENGTH DIR.		1 legs of # 4		
WALL EFFECTIVELY CONTINUOUS ?		Yes	(ACI 18.10.6.2 apply)	

DESIGN SUMMARY

SHEAR WALL LENGTH	L =	26.00	ft, (7.92 m)	
SHEAR WALL THICKNESS	t =	8.00	in, (203 mm)	
END REINFORCING	1 # 5			
WALL HORIZ. REINF	1 # 4 @ 10		in. (254 mm), o.c.	
WALL VERT. REINF	1 # 5 @ 12		in. (305 mm), o.c.	
HOOP REINF - WIDTH, B, DIR.				
HOOP REINF - LENGTH DIR.				

THE WALL DESIGN IS ADEQUATE

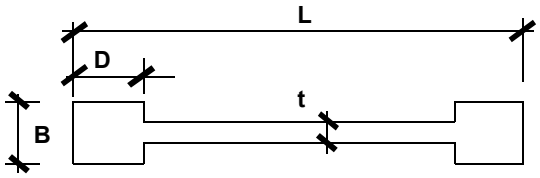

ANALYSIS

DETERMINE WHETHER THE WALL CAN RESIST SEISMIC LOADS (2016 CBC 1905A)

P_u = 138 k < $0.35\ A_g\ f_c'$ = 3494 k [Satisfactory]

where A_g = 2496 in^2.

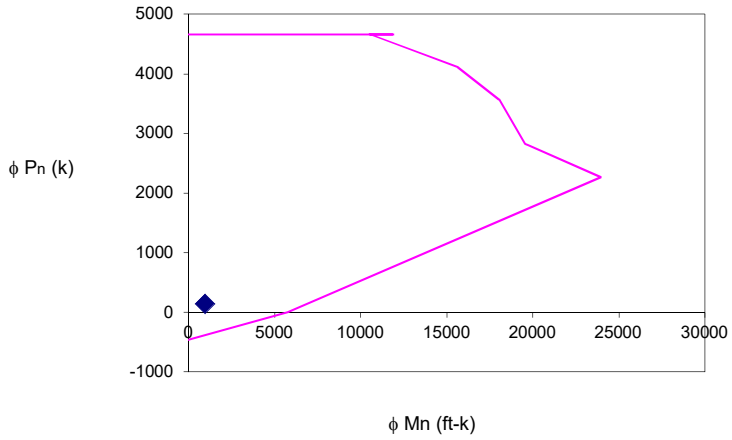

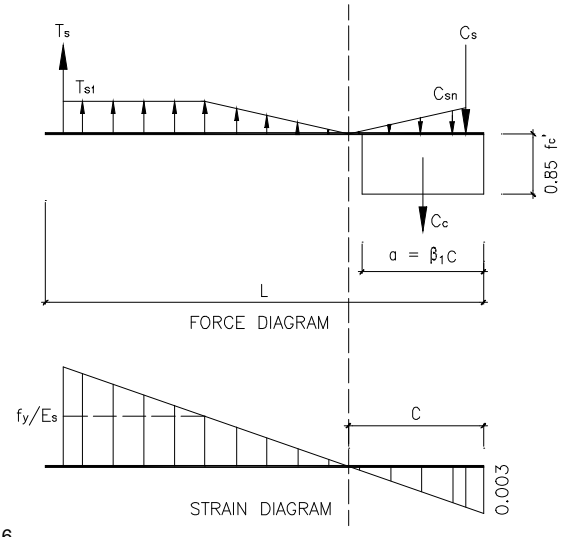

CHECK MINIMUM REINFORCEMENT RATIOS AND SPACING (ACI 318-14 18.10.2.1 & 11.6. . ,

$(\rho_t)_{min.}$ = 0.0020 [for $A_{cv}\,(f_c')^{0.5}$ = 157.86 kips > Vu , and bar size # 4 horizontal]

$(\rho_l)_{min.}$ = 0.0012 [for $A_{cv}\,(f_c')^{0.5}$ = 157.86 kips > Vu , and bar size # 5 vertical]

$(\rho_t)_{provd.}$ = 0.0025 > $(\rho_t)_{min.}$ [Satisfactory]

$(\rho_l)_{provd.}$ = 0.0032 > $(\rho_l)_{min.}$ [Satisfactory]

where A_{cv} = 2496 in^2 (gross area of concrete section bounded by web thickness and length in the shear direction)

The proposed spacing is less than the maximum permissible value of 18 in and is satisfactory. Since wall V_u < $2\ A_{cv}\,(f_c')^{0.5}$, one curtain reinforcement required. (ACI 318-14 18.10.2.2)

CHECK SHEAR CAPACITY (ACI 318-14 18.10.4.1 & 18.10.4.4)

ϕV_n =MIN [$\phi\ A_{cv}\,(\alpha_c\,(f_c')^{0.5} + \rho_t\,f_y)$, $\phi\ 8\ A_{cv}\,(f_c')^{0.5}$] = 508.79 kips > V_u [Satisfactory]

where ϕ = 0.60 (conservatively, ACI 318-14 21.2)

α_c = 3.0 (for h_w / L = 0.50 < 1.5)

ρ_l > ρ_t [Satisfactory] (only for h_w / L > 2.0, ACI 318-14 18.10.4.3)

(cont'd)

CHECK FLEXURAL & AXIAL CAPACITY

MAXIMUM DESIGN AXIAL LOAD STRENGTH (ACI 318-14 18 & 22.4)

$\phi P_{max} = 0.8\ \phi\ [\ 0.85\ f_c'\ (A_g - A_{st}) + f_y A_{st}]$ = 4665.4 kips. > P_u [Satisfactory]

where ϕ = 0.65 (ACI 318-14 21.2)

A_{st} = 8.58 in^2.

DESIGN MOMENT CAPACITY AT MAXIMUM AXIAL LOAD STRENGTH ARE FROM 0 TO 11884 ft-kips.

FOR THE BALANCED STRAIN CONDITION UNDER COMBINED FLEXURE AND AXIAL LOAD, THE MAXIMUM STRAIN IN THE CONCRETE AND IN THE TENSION REINFORCEMENT MUST SIMULTANEOUSLY REACH THE VALUES SPECIFIED IN ACI 318-14 21.2.2

AS ε_c = 0.003 AND $\varepsilon_t = f_y / E_s$ = 0.002069 . THE DEPTH TO THE NEUTRAL AXIS AND EQUIVALENT RECTANGULAR CONCRETE STRESS BLOCK ARE GIVEN BY

$C_b = d\ \varepsilon_c / (\varepsilon_c + \varepsilon_s)$ = 182 in $a = C_b\ \beta_1$ = 155 in β_1 = 0.85 (ACI 318-14 22.2.2.4.3)

$\phi = 0.65 + (\varepsilon_t - 0.002)(250/3)$ = 0.656 (ACI 318-14 21.2) d = (L - 0.5D) = 308 in

DESIGN AXIAL AND MOMENT CAPACITIES AT THE BALANCED STRAIN CONDITION ARE 2809 kips AND 19748 ft-kips.

IN ACCORDANCE WITH ACI 318-14 21.2 THE DESIGN MOMENT CAPACITY WITHOUT AXIAL LOAD IS

$\phi M_n = 0.9\ M_n$ = 5743 kips.

TO KEEP TENSION SECTION WITH SHEAR CAPACITY PER ACI 11.5.4.6, THE PURE AXIAL TENSION CAPACITY IS

$-\phi P_n = -0.9\ MIN(A_{st} F_y\ ,\ 3.3\ f_c'^{0.5}\ 4\ L\ t\ )$ = -463 kips.

SUMMARY OF LOAD VERSUS MOMENT CAPACITIES ARE SHOWN IN THE TABLE BELOW, AND THEY ARE PLOTTED ON THE INTERACTION DIAGRAM AT FRONT PAGE.

		ϕP_n (kips)	ϕM_n (ft-kips)
AT AXIAL LOAD ONLY	=	4665	0
AT MAXIMUM LOAD	=	4665	11884
AT 0 % TENSION	=	4665	10530
AT 25 % TENSION	=	4110	15642
AT 50 % TENSION	=	3567	18061
AT ε_t = 0.002	=	2827	19547
AT BALANCED CONDITION	=	2809	19748
AT ε_t = 0.005	=	2273	23961
AT FLEXURE ONLY	=	0	5743
AT TENSION ONLY	=	-463	0

DESIGN FORCES P_u & M_u ARE ALSO PLOTTED ON THE INTERACTION DIAGRAM. FROM THE INTERACTION DIAGRAM.

THE ALLOWABLE MOMENT AT AN AXIAL LOAD P_u IS GIVEN BY

ϕM_n = 7314 kips. > M_u [Satisfactory]

where $\phi = Min\{0.9, Max[0.65 + (\varepsilon_t - 0.002)(250/3)\ ,\ 0.65]\}$ = 0.900 (ACI 318-14 21.2)

CHECK BOUNDARY ZONE REQUIREMENTS

AN EXEMPTION FROM THE PROVISION OF BOUNDARY ZONE CONFINEMENT REINFORCEMENT IS GIVEN BY ACI 318-14 18.10.6.2, 18.10.6.3, and 18.10.6.5(a) PROVIDED THAT

$c < (L\ h_w) / 1.5(600\ \delta_u)$ for ACI 21.9.6.2 apply or $f_c < 0.2\ f_c'$ for ACI 18.10.6.3 apply [Satisfactory]

where c = 25 in. (distance from the extreme compression fiber to neutral axis at P_u & M_n loads.)

δ_u = 0.8 in. (design displacement, assume $0.005h_w$ as a conservative short cut, see ACI 318-14 18.10.6.2.)

$f_c = (P_u / A) + (M_u\ y / I)$ = 0.141 ksi. (the maximum extreme fiber compressive stress at P_u & M_u loads.)

y = 156 in. (distance from the extreme compression fiber to neutral axis at P_u & M_u loads.)

A = 2565 in^2. (area of transformed section.)

I = 20807232 in^4. (moment of inertia of transformed section.)

Or the longitudinal reinforcement ratio at the wall end = 0.005 < $400 / f_y$ [Satisfactory]

HENCE BOUNDARY ZONE DETAIL REQUIREMENTS ARE NOT NECESSARY AND OMIT THE CALCULATIONS BELOW.

The boundary element length = MAX(c - 0.1L , 0.5 c) = 12.66 in. (ACI 318-14 18.10.6.4)

The maximum hoop spacing = MIN[B/4 , $6d_b$, 6 , $4+(14-h_x)/3$] = 8 in.o.c. (ACI 318-14 18.10.6.2 & 18.10.6.5)

$A_{sh,\ B\ DIR} = (0.09\ s\ h_c\ f_c')\ /\ f_{yh}$ = N/A in^2.

$A_{sh,\ L\ DIR} = (0.09\ s\ h_c\ f_c')\ /\ f_{yh}$ = N/A in^2.

THANG LE & ASSOCIATES TLA STRUCTURAL ENGINEERS

PROJECT :
CLIENT :
JOB NO. : DATE :

PAGE :
DESIGN BY :
REVIEW BY :

Special Reinforced Concrete Shear Wall Design Based on ACI 318-14 & 2016 CBC Chapter A — NS6

INPUT DATA

CONCRETE STRENGTH (ACI 318 19.2.1.1)	f_c' =	4	ksi, (28 MPa)	
REBAR YIELD STRESS	f_y =	60	ksi, (414 MPa)	
FACTORED AXIAL LOAD	P_u =	197	kips, (876 kN)	
FACTORED MOMENT LOAD	M_u =	932	ft-kips, (1264 kN-m)	
FACTORED SHEAR LOAD	V_u =	74	kips, (329 kN)	
LENGTH OF SHEAR WALL	L =	28	ft, (8.53 m)	
THICKNESS OF WALL	t =	8	in, (203 mm)	
DEPTH AT FLANGE	D =	8	in, (203 mm)	
WIDTH AT FLANGE	B =	8	in, (203 mm)	
TOTAL WALL HEIGHT TO TOP	h_w =	13	ft, (3.96 m)	
REINF. BARS AT BULB		1 # 5		
WALL DIST. HORIZ. REINF.		1 # 4 @ 10	in, (254 mm) o.c.	
WALL DIST. VERT. REINF.		1 # 5 @ 12	in, (305 mm) o.c.	
HOOP REINF - WIDTH, B, DIR.		1 legs of # 4		
HOOP REINF - LENGTH DIR.		1 legs of # 4		
WALL EFFECTIVELY CONTINUOUS ?		Yes	(ACI 18.10.6.2 apply)	

DESIGN SUMMARY

SHEAR WALL LENGTH	L =	28.00	ft, (8.53 m)	
SHEAR WALL THICKNESS	t =	8.00	in, (203 mm)	
END REINFORCING	1 # 5			
WALL HORIZ. REINF	1 # 4 @ 10		in. (254 mm), o.c.	
WALL VERT. REINF	1 # 5 @ 12		in. (305 mm), o.c.	
HOOP REINF - WIDTH, B, DIR.				
HOOP REINF - LENGTH DIR.				

THE WALL DESIGN IS ADEQUATE

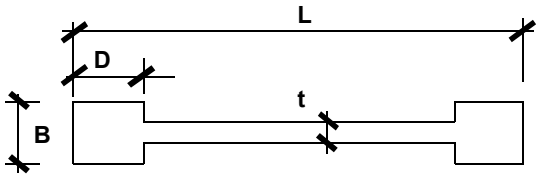

ANALYSIS

DETERMINE WHETHER THE WALL CAN RESIST SEISMIC LOADS (2016 CBC 1905A)

P_u = 197 k < $0.35\ A_g\ f_c'$ = 3763 k [Satisfactory]

where A_g = 2688 in^2.

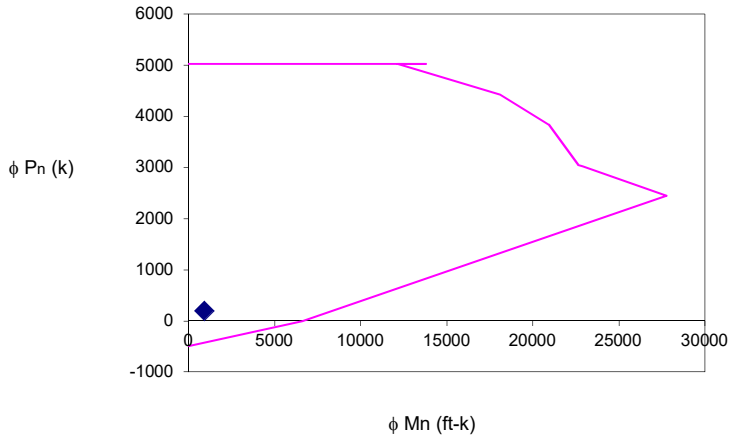

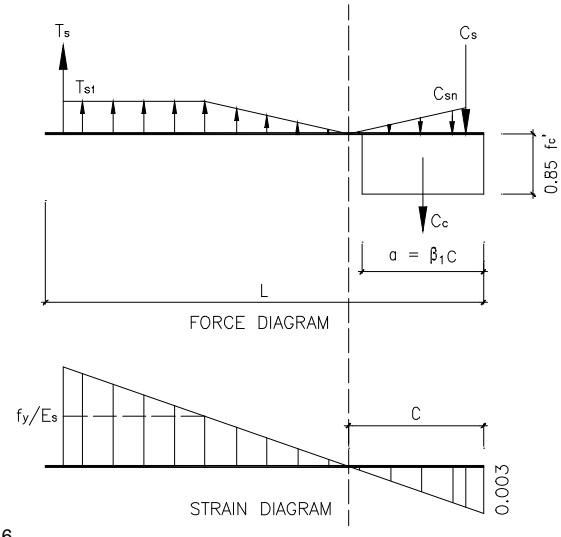

CHECK MINIMUM REINFORCEMENT RATIOS AND SPACING (ACI 318-14 18.10.2.1 & 11.6. . ,

$(\rho_t)_{min.}$ = 0.0020 [for $A_{cv}\,(f_c')^{0.5}$ = 170.00 kips > Vu , and bar size # 4 horizontal]

$(\rho_l)_{min.}$ = 0.0012 [for $A_{cv}\,(f_c')^{0.5}$ = 170.00 kips > Vu , and bar size # 5 vertical]

$(\rho_t)_{provd.}$ = 0.0025 > $(\rho_t)_{min.}$ [Satisfactory]

$(\rho_l)_{provd.}$ = 0.0032 > $(\rho_l)_{min.}$ [Satisfactory]

where A_{cv} = 2688 in^2 (gross area of concrete section bounded by web thickness and length in the shear direction)

The proposed spacing is less than the maximum permissible value of 18 in and is satisfactory. Since wall V_u < $2\,A_{cv}\,(f_c')^{0.5}$, one curtain reinforcement required. (ACI 318-14 18.10.2.2)

CHECK SHEAR CAPACITY (ACI 318-14 18.10.4.1 & 18.10.4.4)

ϕV_n =MIN [$\phi\,A_{cv}\,(\alpha_c\,(f_c')^{0.5} + \rho_t\,f_y)$, $\phi\,8\,A_{cv}\,(f_c')^{0.5}$] = 547.93 kips > V_u [Satisfactory]

where ϕ = 0.60 (conservatively, ACI 318-14 21.2)

α_c = 3.0 (for h_w / L = 0.46 < 1.5)

ρ_l > ρ_t [Satisfactory] (only for h_w / L > 2.0, ACI 318-14 18.10.4.3)

(cont'd)

CHECK FLEXURAL & AXIAL CAPACITY

MAXIMUM DESIGN AXIAL LOAD STRENGTH (ACI 318-14 18 & 22.4)

$\phi P_{max} = 0.8\ \phi\ [\ 0.85\ f_c'\ (A_g - A_{st}) + f_y A_{st}]$ = 5023.1 kips. > P_u [Satisfactory]

where ϕ = 0.65 (ACI 318-14 21.2)

A_{st} = 9.20 in^2.

DESIGN MOMENT CAPACITY AT MAXIMUM AXIAL LOAD STRENGTH ARE FROM 0 TO 13777 ft-kips.

FOR THE BALANCED STRAIN CONDITION UNDER COMBINED FLEXURE AND AXIAL LOAD, THE MAXIMUM STRAIN IN THE CONCRETE AND IN THE TENSION REINFORCEMENT MUST SIMULTANEOUSLY REACH THE VALUES SPECIFIED IN ACI 318-14 21.2.2

AS ε_c = 0.003 AND $\varepsilon_t = f_y / E_s$ = 0.002069 . THE DEPTH TO THE NEUTRAL AXIS AND EQUIVALENT RECTANGULAR CONCRETE STRESS BLOCK ARE GIVEN BY

$C_b = d\ \varepsilon_c / (\varepsilon_c + \varepsilon_s)$ = 196 in $a = C_b\ \beta_1$ = 167 in β_1 = 0.85 (ACI 318-14 22.2.2.4.3)

$\phi = 0.65 + (\varepsilon_t - 0.002)(250/3)$ = 0.656 (ACI 318-14 21.2) d = (L - 0.5D) = 332 in

DESIGN AXIAL AND MOMENT CAPACITIES AT THE BALANCED STRAIN CONDITION ARE 3028 kips AND 22887 ft-kips.

IN ACCORDANCE WITH ACI 318-14 21.2 THE DESIGN MOMENT CAPACITY WITHOUT AXIAL LOAD IS

$\phi M_n = 0.9\ M_n$ = 6628 kips.

TO KEEP TENSION SECTION WITH SHEAR CAPACITY PER ACI 11.5.4.6, THE PURE AXIAL TENSION CAPACITY IS

$-\phi P_n = -0.9\ MIN(A_{st} F_y\ ,\ 3.3\ f_c'^{0.5}\ 4\ L\ t\ )$ = -497 kips.

SUMMARY OF LOAD VERSUS MOMENT CAPACITIES ARE SHOWN IN THE TABLE BELOW, AND THEY ARE PLOTTED ON THE INTERACTION DIAGRAM AT FRONT PAGE.

		ϕP_n (kips)	ϕM_n (ft-kips)
AT AXIAL LOAD ONLY	=	5023	0
AT MAXIMUM LOAD	=	5023	13777
AT 0 % TENSION	=	5023	12161
AT 25 % TENSION	=	4430	18108
AT 50 % TENSION	=	3844	20923
AT ε_t = 0.002	=	3048	22654
AT BALANCED CONDITION	=	3028	22887
AT ε_t = 0.005	=	2451	27782
AT FLEXURE ONLY	=	0	6628
AT TENSION ONLY	=	-497	0

DESIGN FORCES P_u & M_u ARE ALSO PLOTTED ON THE INTERACTION DIAGRAM. FROM THE INTERACTION DIAGRAM.

THE ALLOWABLE MOMENT AT AN AXIAL LOAD P_u IS GIVEN BY

ϕM_n = 9031 kips. > M_u [Satisfactory]

where $\phi = Min\{0.9, Max[0.65 + (\varepsilon_t - 0.002)(250/3)\ ,\ 0.65]\}$ = 0.900 (ACI 318-14 21.2)

CHECK BOUNDARY ZONE REQUIREMENTS

AN EXEMPTION FROM THE PROVISION OF BOUNDARY ZONE CONFINEMENT REINFORCEMENT IS GIVEN BY ACI 318-14 18.10.6.2, 18.10.6.3, and 18.10.6.5(a) PROVIDED THAT

$c < (L\ h_w) / 1.5(600\ \delta_u)$ for ACI 21.9.6.2 apply or $f_c < 0.2\ f_c'$ for ACI 18.10.6.3 apply [Satisfactory]

where c = 29 in. (distance from the extreme compression fiber to neutral axis at P_u & M_n loads.)

δ_u = 0.8 in. (design displacement, assume $0.005h_w$ as a conservative short cut, see ACI 318-14 18.10.6.2.)

$f_c = (P_u / A) + (M_u\ y / I)$ = 0.144 ksi. (the maximum extreme fiber compressive stress at P_u & M_u loads.)

y = 168 in. (distance from the extreme compression fiber to neutral axis at P_u & M_u loads.)

A = 2762 in^2. (area of transformed section.)

I = 25984723 in^4. (moment of inertia of transformed section.)

Or the longitudinal reinforcement ratio at the wall end = 0.005 < $400 / f_y$ [Satisfactory]

HENCE BOUNDARY ZONE DETAIL REQUIREMENTS ARE NOT NECESSARY AND OMIT THE CALCULATIONS BELOW.

The boundary element length = MAX(c - 0.1L , 0.5 c) = 14.66 in. (ACI 318-14 18.10.6.4)

The maximum hoop spacing = MIN[B/4 , $6d_b$, 6 , $4+(14-h_x)/3$] = 8 in.o.c. (ACI 318-14 18.10.6.2 & 18.10.6.5)

$A_{sh,\ B\ DIR} = (0.09\ s\ h_c\ f_c')\ /\ f_{yh}$ = N/A in^2.

$A_{sh,\ L\ DIR} = (0.09\ s\ h_c\ f_c')\ /\ f_{yh}$ = N/A in^2.

THANG LE & ASSOCIATES TLA STRUCTURAL ENGINEERS

PROJECT :
CLIENT :
JOB NO. : DATE :

PAGE :
DESIGN BY :
REVIEW BY :

Special Reinforced Concrete Shear Wall Design Based on ACI 318-14 & 2016 CBC Chapter A — NS7

INPUT DATA

CONCRETE STRENGTH (ACI 318 19.2.1.1)	f_c' =	4	ksi, (28 MPa)	
REBAR YIELD STRESS	f_y =	60	ksi, (414 MPa)	
FACTORED AXIAL LOAD	P_u =	196	kips, (872 kN)	
FACTORED MOMENT LOAD	M_u =	889	ft-kips, (1205 kN-m)	
FACTORED SHEAR LOAD	V_u =	70	kips, (311 kN)	
LENGTH OF SHEAR WALL	L =	28	ft, (8.53 m)	
THICKNESS OF WALL	t =	8	in, (203 mm)	
DEPTH AT FLANGE	D =	8	in, (203 mm)	
WIDTH AT FLANGE	B =	8	in, (203 mm)	
TOTAL WALL HEIGHT TO TOP	h_w =	13	ft, (3.96 m)	
REINF. BARS AT BULB		1 # 5		
WALL DIST. HORIZ. REINF.		1 # 4 @ 10	in, (254 mm) o.c.	
WALL DIST. VERT. REINF.		1 # 5 @ 12	in, (305 mm) o.c.	
HOOP REINF - WIDTH, B, DIR.		1 legs of # 4		
HOOP REINF - LENGTH DIR.		1 legs of # 4		
WALL EFFECTIVELY CONTINUOUS ?		Yes	(ACI 18.10.6.2 apply)	

DESIGN SUMMARY

SHEAR WALL LENGTH	L =	28.00	ft, (8.53 m)	
SHEAR WALL THICKNESS	t =	8.00	in, (203 mm)	
END REINFORCING	1 # 5			
WALL HORIZ. REINF	1 # 4 @ 10		in. (254 mm), o.c.	
WALL VERT. REINF	1 # 5 @ 12		in. (305 mm), o.c.	
HOOP REINF - WIDTH, B, DIR.				
HOOP REINF - LENGTH DIR.				

THE WALL DESIGN IS ADEQUATE

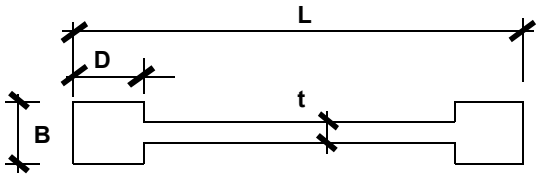

ANALYSIS

DETERMINE WHETHER THE WALL CAN RESIST SEISMIC LOADS (2016 CBC 1905A)

P_u = 196 k < $0.35\ A_g\ f_c'$ = 3763 k [Satisfactory]

where A_g = 2688 in^2.

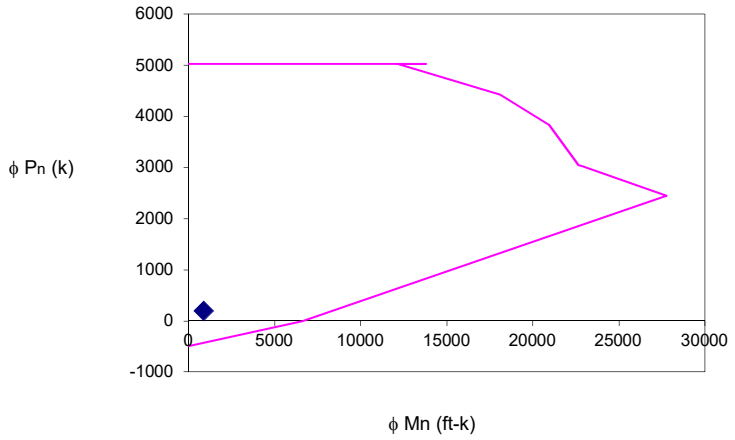

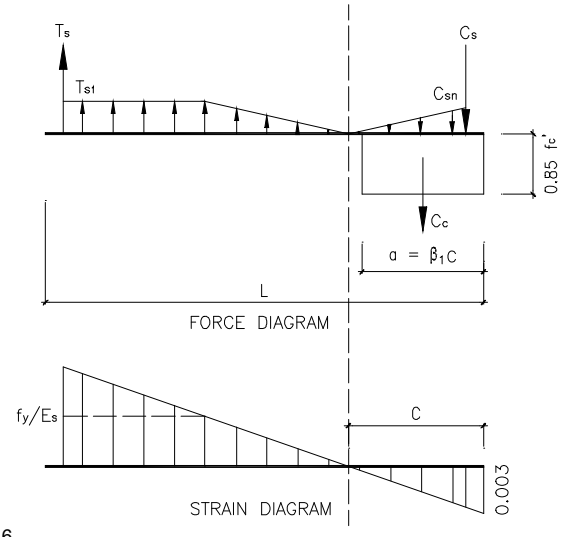

CHECK MINIMUM REINFORCEMENT RATIOS AND SPACING (ACI 318-14 18.10.2.1 & 11.6. . ,

$(\rho_t)_{min.}$ = 0.0020 [for $A_{cv}\,(f_c')^{0.5}$ = 170.00 kips > Vu , and bar size # 4 horizontal]

$(\rho_l)_{min.}$ = 0.0012 [for $A_{cv}\,(f_c')^{0.5}$ = 170.00 kips > Vu , and bar size # 5 vertical]

$(\rho_t)_{provd.}$ = 0.0025 > $(\rho_t)_{min.}$ [Satisfactory]

$(\rho_l)_{provd.}$ = 0.0032 > $(\rho_l)_{min.}$ [Satisfactory]

where A_{cv} = 2688 in^2 (gross area of concrete section bounded by web thickness and length in the shear direction)

The proposed spacing is less than the maximum permissible value of 18 in and is satisfactory. Since wall V_u < $2\,A_{cv}\,(f_c')^{0.5}$, one curtain reinforcement required. (ACI 318-14 18.10.2.2)

CHECK SHEAR CAPACITY (ACI 318-14 18.10.4.1 & 18.10.4.4)

ϕV_n =MIN [$\phi\,A_{cv}\,(\alpha_c\,(f_c')^{0.5} + \rho_t\,f_y)$, $\phi\,8\,A_{cv}\,(f_c')^{0.5}$] = 547.93 kips > V_u [Satisfactory]

where ϕ = 0.60 (conservatively, ACI 318-14 21.2)

α_c = 3.0 (for h_w / L = 0.46 < 1.5)

ρ_l > ρ_t [Satisfactory] (only for h_w / L > 2.0, ACI 318-14 18.10.4.3)

(cont'd)

CHECK FLEXURAL & AXIAL CAPACITY

MAXIMUM DESIGN AXIAL LOAD STRENGTH (ACI 318-14 18 & 22.4)

$\phi P_{max} = 0.8\ \phi\ [\ 0.85\ f_c'\ (A_g - A_{st}) + f_y A_{st}]$ = 5023.1 kips. > P_u [Satisfactory]

where ϕ = 0.65 (ACI 318-14 21.2)

A_{st} = 9.20 in^2.

DESIGN MOMENT CAPACITY AT MAXIMUM AXIAL LOAD STRENGTH ARE FROM 0 TO 13777 ft-kips.

FOR THE BALANCED STRAIN CONDITION UNDER COMBINED FLEXURE AND AXIAL LOAD, THE MAXIMUM STRAIN IN THE CONCRETE AND IN THE TENSION REINFORCEMENT MUST SIMULTANEOUSLY REACH THE VALUES SPECIFIED IN ACI 318-14 21.2.2

AS ε_c = 0.003 AND $\varepsilon_t = f_y / E_s$ = 0.002069 . THE DEPTH TO THE NEUTRAL AXIS AND EQUIVALENT RECTANGULAR CONCRETE STRESS BLOCK ARE GIVEN BY

$C_b = d\ \varepsilon_c / (\varepsilon_c + \varepsilon_s)$ = 196 in $a = C_b\ \beta_1$ = 167 in β_1 = 0.85 (ACI 318-14 22.2.2.4.3)

$\phi = 0.65 + (\varepsilon_t - 0.002)(250/3)$ = 0.656 (ACI 318-14 21.2) d = (L - 0.5D) = 332 in

DESIGN AXIAL AND MOMENT CAPACITIES AT THE BALANCED STRAIN CONDITION ARE 3028 kips AND 22887 ft-kips.

IN ACCORDANCE WITH ACI 318-14 21.2 THE DESIGN MOMENT CAPACITY WITHOUT AXIAL LOAD IS

$\phi M_n = 0.9\ M_n$ = 6628 kips.

TO KEEP TENSION SECTION WITH SHEAR CAPACITY PER ACI 11.5.4.6, THE PURE AXIAL TENSION CAPACITY IS

$-\phi P_n = -0.9\ MIN(A_{st} F_y\ ,\ 3.3\ f_c'^{0.5}\ 4\ L\ t\ )$ = -497 kips.

SUMMARY OF LOAD VERSUS MOMENT CAPACITIES ARE SHOWN IN THE TABLE BELOW, AND THEY ARE PLOTTED ON THE INTERACTION DIAGRAM AT FRONT PAGE.

		ϕP_n (kips)	ϕM_n (ft-kips)
AT AXIAL LOAD ONLY	=	5023	0
AT MAXIMUM LOAD	=	5023	13777
AT 0 % TENSION	=	5023	12161
AT 25 % TENSION	=	4430	18108
AT 50 % TENSION	=	3844	20923
AT ε_t = 0.002	=	3048	22654
AT BALANCED CONDITION	=	3028	22887
AT ε_t = 0.005	=	2451	27782
AT FLEXURE ONLY	=	0	6628
AT TENSION ONLY	=	-497	0

DESIGN FORCES P_u & M_u ARE ALSO PLOTTED ON THE INTERACTION DIAGRAM. FROM THE INTERACTION DIAGRAM.

THE ALLOWABLE MOMENT AT AN AXIAL LOAD P_u IS GIVEN BY

ϕM_n = 9019 kips. > M_u [Satisfactory]

where $\phi = Min\{0.9, Max[0.65 + (\varepsilon_t - 0.002)(250/3)\ ,\ 0.65]\}$ = 0.900 (ACI 318-14 21.2)

CHECK BOUNDARY ZONE REQUIREMENTS

AN EXEMPTION FROM THE PROVISION OF BOUNDARY ZONE CONFINEMENT REINFORCEMENT IS GIVEN BY ACI 318-14 18.10.6.2, 18.10.6.3, and 18.10.6.5(a) PROVIDED THAT

$c < (L\ h_w) / 1.5(600\ \delta_u)$ for ACI 21.9.6.2 apply or $f_c < 0.2\ f_c'$ for ACI 18.10.6.3 apply [Satisfactory]

where c = 29 in. (distance from the extreme compression fiber to neutral axis at P_u & M_n loads.)

δ_u = 0.8 in. (design displacement, assume $0.005h_w$ as a conservative short cut, see ACI 318-14 18.10.6.2.)

$f_c = (P_u / A) + (M_u\ y / I)$ = 0.140 ksi. (the maximum extreme fiber compressive stress at P_u & M_u loads.)

y = 168 in. (distance from the extreme compression fiber to neutral axis at P_u & M_u loads.)

A = 2762 in^2. (area of transformed section.)

I = 25984723 in^4. (moment of inertia of transformed section.)

Or the longitudinal reinforcement ratio at the wall end = 0.005 < $400 / f_y$ [Satisfactory]

HENCE BOUNDARY ZONE DETAIL REQUIREMENTS ARE NOT NECESSARY AND OMIT THE CALCULATIONS BELOW.

The boundary element length = MAX(c - 0.1L , 0.5 c) = 14.64 in. (ACI 318-14 18.10.6.4)

The maximum hoop spacing = MIN[B/4 , $6d_b$, 6 , $4+(14-h_x)/3$] = 8 in.o.c. (ACI 318-14 18.10.6.2 & 18.10.6.5)

$A_{sh,\ B\ DIR} = (0.09\ s\ h_c\ f_c')\ /\ f_{yh}$ = N/A in^2.

$A_{sh,\ L\ DIR} = (0.09\ s\ h_c\ f_c')\ /\ f_{yh}$ = N/A in^2.

THANG LE & ASSOCIATES TLA STRUCTURAL ENGINEERS

PROJECT :
CLIENT :
JOB NO. : DATE :

PAGE :
DESIGN BY :
REVIEW BY :

Special Reinforced Concrete Shear Wall Design Based on ACI 318-14 & 2016 CBC Chapter A — NS8

INPUT DATA

CONCRETE STRENGTH (ACI 318 19.2.1.1)	f_c' =	4	ksi, (28 MPa)	
REBAR YIELD STRESS	f_y =	60	ksi, (414 MPa)	
FACTORED AXIAL LOAD	P_u =	190	kips, (845 kN)	
FACTORED MOMENT LOAD	M_u =	3550	ft-kips, (4813 kN-m)	
FACTORED SHEAR LOAD	V_u =	256	kips, (1139 kN)	
LENGTH OF SHEAR WALL	L =	30	ft, (9.14 m)	
THICKNESS OF WALL	t =	8	in, (203 mm)	
DEPTH AT FLANGE	D =	8	in, (203 mm)	
WIDTH AT FLANGE	B =	8	in, (203 mm)	
TOTAL WALL HEIGHT TO TOP	h_w =	13	ft, (3.96 m)	
REINF. BARS AT BULB		1 # 5		
WALL DIST. HORIZ. REINF.		1 # 4 @ 10	in, (254 mm) o.c.	
WALL DIST. VERT. REINF.		1 # 5 @ 12	in, (305 mm) o.c.	
HOOP REINF - WIDTH, B, DIR.		1 legs of # 4		
HOOP REINF - LENGTH DIR.		1 legs of # 4		
WALL EFFECTIVELY CONTINUOUS ?		Yes	(ACI 18.10.6.2 apply)	

DESIGN SUMMARY

SHEAR WALL LENGTH	L =	30.00	ft, (9.14 m)	
SHEAR WALL THICKNESS	t =	8.00	in, (203 mm)	
END REINFORCING	1 # 5			
WALL HORIZ. REINF	1 # 4 @ 10		in. (254 mm), o.c.	
WALL VERT. REINF	1 # 5 @ 12		in. (305 mm), o.c.	
HOOP REINF - WIDTH, B, DIR.				
HOOP REINF - LENGTH DIR.				

THE WALL DESIGN IS ADEQUATE

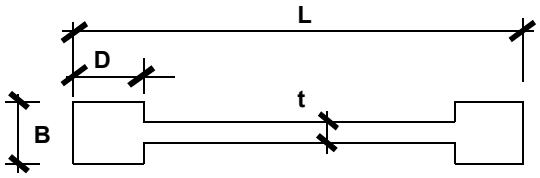

ANALYSIS

DETERMINE WHETHER THE WALL CAN RESIST SEISMIC LOADS (2016 CBC 1905A)

P_u = 190 k < $0.35\ A_g\ f_c'$ = 4032 k [Satisfactory]

where A_g = 2880 in^2.

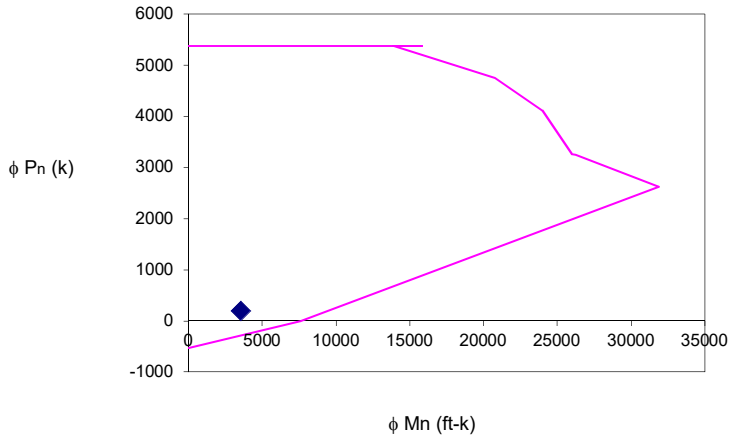

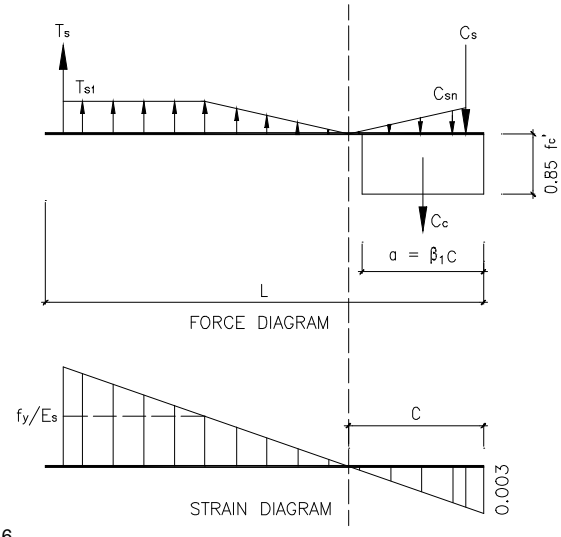

CHECK MINIMUM REINFORCEMENT RATIOS AND SPACING (ACI 318-14 18.10.2.1 & 11.6. . ,

$(\rho_t)_{min.}$ = 0.0025 [for $A_{cv}\,(f_c')^{0.5}$ = 182.15 kips < Vu , and bar size # 4 horizontal]

$(\rho_l)_{min.}$ = 0.0025 [for $A_{cv}\,(f_c')^{0.5}$ = 182.15 kips < Vu , and bar size # 5 vertical]

$(\rho_t)_{provd.}$ = 0.0025 > $\rho(_t)_{min.}$ [Satisfactory]

$(\rho_l)_{provd.}$ = 0.0032 > $(\rho_l)_{min.}$ [Satisfactory]

where A_{cv} = 2880 in^2 (gross area of concrete section bounded by web thickness and length in the shear direction)

The proposed spacing is less than the maximum permissible value of 18 in and is satisfactory. Since wall V_u < $2\ A_{cv}\,(f_c')^{0.5}$, one curtain reinforcement required. (ACI 318-14 18.10.2.2)

CHECK SHEAR CAPACITY (ACI 318-14 18.10.4.1 & 18.10.4.4)

ϕV_n =MIN [$\phi\ A_{cv}\,(\alpha_c\,(f_c')^{0.5} + \rho_t\,f_y)$, $\phi\ 8\ A_{cv}\,(f_c')^{0.5}$] = 587.06 kips > V_u [Satisfactory]

where ϕ = 0.60 (conservatively, ACI 318-14 21.2)

α_c = 3.0 (for h_w / L = 0.43 < 1.5)

ρ_l > ρ_t [Satisfactory] (only for h_w / L > 2.0, ACI 318-14 18.10.4.3)

(cont'd)

CHECK FLEXURAL & AXIAL CAPACITY

MAXIMUM DESIGN AXIAL LOAD STRENGTH (ACI 318-14 18 & 22.4)

$\phi P_{max} = 0.8\ \phi\ [\ 0.85\ f_c'\ (A_g - A_{st}) + f_y A_{st}]$ = 5380.8 kips. > P_u [Satisfactory]

where ϕ = 0.65 (ACI 318-14 21.2)

A_{st} = 9.82 in^2.

DESIGN MOMENT CAPACITY AT MAXIMUM AXIAL LOAD STRENGTH ARE FROM 0 TO 15810 ft-kips.

FOR THE BALANCED STRAIN CONDITION UNDER COMBINED FLEXURE AND AXIAL LOAD, THE MAXIMUM STRAIN IN THE CONCRETE AND IN THE TENSION REINFORCEMENT MUST SIMULTANEOUSLY REACH THE VALUES SPECIFIED IN ACI 318-14 21.2.2

AS ε_c = 0.003 AND $\varepsilon_t = f_y / E_s$ = 0.002069 . THE DEPTH TO THE NEUTRAL AXIS AND EQUIVALENT RECTANGULAR CONCRETE STRESS BLOCK ARE GIVEN BY

$C_b = d\ \varepsilon_c / (\varepsilon_c + \varepsilon_s)$ = 211 in $a = C_b\ \beta_1$ = 179 in β_1 = 0.85 (ACI 318-14 22.2.2.4.3)

$\phi = 0.65 + (\varepsilon_t - 0.002)(250/3)$ = 0.656 (ACI 318-14 21.2) d = (L - 0.5D) = 356 in

DESIGN AXIAL AND MOMENT CAPACITIES AT THE BALANCED STRAIN CONDITION ARE 3247 kips AND 26258 ft-kips.

IN ACCORDANCE WITH ACI 318-14 21.2 THE DESIGN MOMENT CAPACITY WITHOUT AXIAL LOAD IS

$\phi M_n = 0.9\ M_n$ = 7575 kips.

TO KEEP TENSION SECTION WITH SHEAR CAPACITY PER ACI 11.5.4.6, THE PURE AXIAL TENSION CAPACITY IS

$-\phi P_n = -0.9\ MIN(A_{st} F_y\ ,\ 3.3\ f_c'^{0.5}\ 4\ L\ t\ )$ = -530 kips.

SUMMARY OF LOAD VERSUS MOMENT CAPACITIES ARE SHOWN IN THE TABLE BELOW, AND THEY ARE PLOTTED ON THE INTERACTION DIAGRAM AT FRONT PAGE.

		ϕP_n (kips)	ϕM_n (ft-kips)
AT AXIAL LOAD ONLY	=	5381	0
AT MAXIMUM LOAD	=	5381	15810
AT 0 % TENSION	=	5381	13909
AT 25 % TENSION	=	4749	20754
AT 50 % TENSION	=	4122	23995
AT ε_t = 0.002	=	3268	25990
AT BALANCED CONDITION	=	3247	26258
AT ε_t = 0.005	=	2629	31886
AT FLEXURE ONLY	=	0	7575
AT TENSION ONLY	=	-530	0

DESIGN FORCES P_u & M_u ARE ALSO PLOTTED ON THE INTERACTION DIAGRAM. FROM THE INTERACTION DIAGRAM.

THE ALLOWABLE MOMENT AT AN AXIAL LOAD P_u IS GIVEN BY

ϕM_n = 10066 kips. > M_u [Satisfactory]

where $\phi = Min\{0.9, Max[0.65 + (\varepsilon_t - 0.002)(250/3)\ ,\ 0.65]\}$ = 0.900 (ACI 318-14 21.2)

CHECK BOUNDARY ZONE REQUIREMENTS

AN EXEMPTION FROM THE PROVISION OF BOUNDARY ZONE CONFINEMENT REINFORCEMENT IS GIVEN BY ACI 318-14 18.10.6.2, 18.10.6.3, and 18.10.6.5(a) PROVIDED THAT

$c < (L\ h_w) / 1.5(600\ \delta_u)$ for ACI 21.9.6.2 apply or $f_c < 0.2\ f_c'$ for ACI 18.10.6.3 apply [Satisfactory]

where c = 30 in. (distance from the extreme compression fiber to neutral axis at P_u & M_n loads.)

δ_u = 0.8 in. (design displacement, assume $0.005h_w$ as a conservative short cut, see ACI 318-14 18.10.6.2.)

$f_c = (P_u / A) + (M_u\ y / I)$ = 0.304 ksi. (the maximum extreme fiber compressive stress at P_u & M_u loads.)

y = 180 in. (distance from the extreme compression fiber to neutral axis at P_u & M_u loads.)

A = 2959 in^2. (area of transformed section.)

I = 31956866 in^4. (moment of inertia of transformed section.)

Or the longitudinal reinforcement ratio at the wall end = 0.005 < $400 / f_y$ [Satisfactory]

HENCE BOUNDARY ZONE DETAIL REQUIREMENTS ARE NOT NECESSARY AND OMIT THE CALCULATIONS BELOW.

The boundary element length = MAX(c - 0.1L , 0.5 c) = 15.22 in. (ACI 318-14 18.10.6.4)

The maximum hoop spacing = MIN[B/4 , $6d_b$, 6 , $4+(14-h_x)/3$] = 8 in.o.c. (ACI 318-14 18.10.6.2 & 18.10.6.5)

$A_{sh,\ B\ DIR} = (0.09\ s\ h_c\ f_c')\ /\ f_{yh}$ = N/A in^2.

$A_{sh,\ L\ DIR} = (0.09\ s\ h_c\ f_c')\ /\ f_{yh}$ = N/A in^2.

THANG LE & ASSOCIATES TLA STRUCTURAL ENGINEERS

PROJECT :
CLIENT :
JOB NO. : DATE :

PAGE :
DESIGN BY :
REVIEW BY :

Special Reinforced Concrete Shear Wall Design Based on ACI 318-14 & 2016 CBC Chapter A — NS9

INPUT DATA

CONCRETE STRENGTH (ACI 318 19.2.1.1)	f_c' =	4	ksi, (28 MPa)	
REBAR YIELD STRESS	f_y =	60	ksi, (414 MPa)	
FACTORED AXIAL LOAD	P_u =	52	kips, (231 kN)	
FACTORED MOMENT LOAD	M_u =	1604	ft-kips, (2175 kN-m)	
FACTORED SHEAR LOAD	V_u =	120	kips, (534 kN)	
LENGTH OF SHEAR WALL	L =	18.75	ft, (5.72 m)	
THICKNESS OF WALL	t =	8	in, (203 mm)	
DEPTH AT FLANGE	D =	8	in, (203 mm)	
WIDTH AT FLANGE	B =	8	in, (203 mm)	
TOTAL WALL HEIGHT TO TOP	h_w =	13	ft, (3.96 m)	
REINF. BARS AT BULB		1 # 5		
WALL DIST. HORIZ. REINF.		1 # 4 @ 10	in, (254 mm) o.c.	
WALL DIST. VERT. REINF.		1 # 5 @ 12	in, (305 mm) o.c.	
HOOP REINF - WIDTH, B, DIR.		1 legs of # 4		
HOOP REINF - LENGTH DIR.		1 legs of # 4		
WALL EFFECTIVELY CONTINUOUS ?		Yes	(ACI 18.10.6.2 apply)	

DESIGN SUMMARY

SHEAR WALL LENGTH	L =	18.75	ft, (5.72 m)	
SHEAR WALL THICKNESS	t =	8.00	in, (203 mm)	
END REINFORCING	1 # 5			
WALL HORIZ. REINF	1 # 4 @ 10		in. (254 mm), o.c.	
WALL VERT. REINF	1 # 5 @ 12		in. (305 mm), o.c.	
HOOP REINF - WIDTH, B, DIR.				
HOOP REINF - LENGTH DIR.				

THE WALL DESIGN IS ADEQUATE

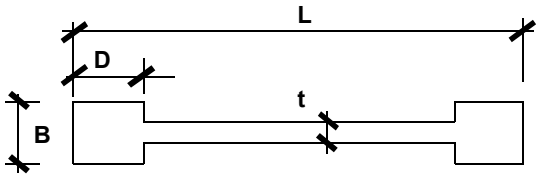

ANALYSIS

DETERMINE WHETHER THE WALL CAN RESIST SEISMIC LOADS (2016 CBC 1905A)

Pu = 52 k < 0.35 A_g f_c' = 2520 k [Satisfactory]

where A_g = 1800 in^2.

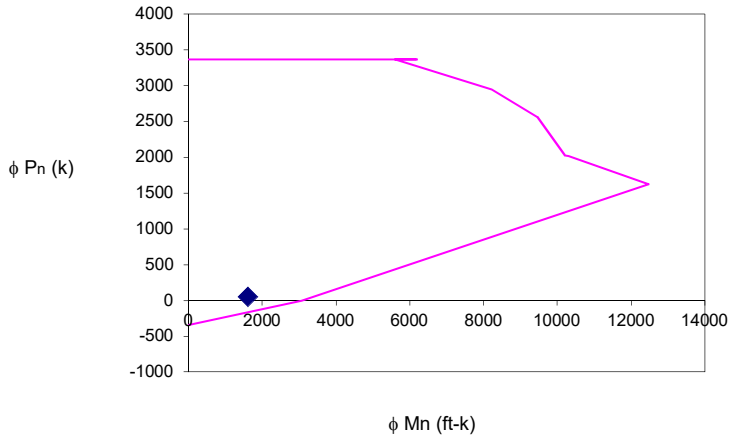

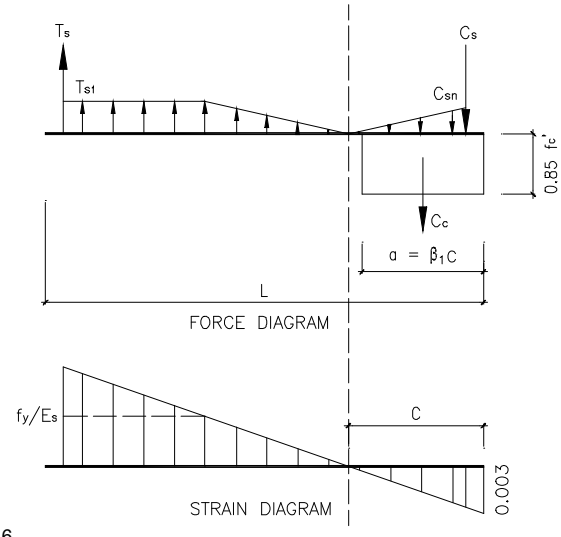

CHECK MINIMUM REINFORCEMENT RATIOS AND SPACING (ACI 318-14 18.10.2.1 & 11.6. . ,

$(\rho_t)_{min.}$ = 0.0025 [for $A_{cv}(f_c')^{0.5}$ = 113.84 kips < Vu , and bar size # 4 horizontal]

$(\rho_l)_{min.}$ = 0.0025 [for $A_{cv}(f_c')^{0.5}$ = 113.84 kips < Vu , and bar size # 5 vertical]

$(\rho_t)_{provd.}$ = 0.0025 > $\rho(_t)_{min.}$ [Satisfactory]

$(\rho_l)_{provd.}$ = 0.0032 > $(\rho_l)_{min.}$ [Satisfactory]

where A_{cv} = 1800 in^2 (gross area of concrete section bounded by web thickness and length in the shear direction)

The proposed spacing is less than the maximum permissible value of 18 in and is satisfactory. Since wall V_u < $2 A_{cv}(f_c')^{0.5}$, one curtain reinforcement required. (ACI 318-14 18.10.2.2)

CHECK SHEAR CAPACITY (ACI 318-14 18.10.4.1 & 18.10.4.4)

ϕV_n =MIN [$\phi A_{cv}(\alpha_c (f_c')^{0.5} + \rho_t f_y)$, $\phi 8 A_{cv}(f_c')^{0.5}$] = 366.92 kips > V_u [Satisfactory]

where ϕ = 0.60 (conservatively, ACI 318-14 21.2)

α_c = 3.0 (for h_w / L = 0.69 < 1.5)

ρ_l > ρ_t [Satisfactory] (only for h_w / L > 2.0, ACI 318-14 18.10.4.3)

(cont'd)

CHECK FLEXURAL & AXIAL CAPACITY

MAXIMUM DESIGN AXIAL LOAD STRENGTH (ACI 318-14 18 & 22.4)

$\phi P_{max} = 0.8\ \phi\ [\ 0.85\ f_c'\ (A_g - A_{st}) + f_y A_{st}]$ = 3368.7 kips. > P_u [Satisfactory]

where ϕ = 0.65 (ACI 318-14 21.2)

A_{st} = 6.33 in^2.

DESIGN MOMENT CAPACITY AT MAXIMUM AXIAL LOAD STRENGTH ARE FROM 0 TO 6193 ft-kips.

FOR THE BALANCED STRAIN CONDITION UNDER COMBINED FLEXURE AND AXIAL LOAD, THE MAXIMUM STRAIN IN THE CONCRETE AND IN THE TENSION REINFORCEMENT MUST SIMULTANEOUSLY REACH THE VALUES SPECIFIED IN ACI 318-14 21.2.2

AS ε_c = 0.003 AND $\varepsilon_t = f_y / E_s$ = 0.002069 . THE DEPTH TO THE NEUTRAL AXIS AND EQUIVALENT RECTANGULAR CONCRETE STRESS BLOCK ARE GIVEN BY

$C_b = d\ \varepsilon_c / (\varepsilon_c + \varepsilon_s)$ = 131 in $a = C_b\ \beta_1$ = 111 in β_1 = 0.85 (ACI 318-14 22.2.2.4.3)

$\phi = 0.65 + (\varepsilon_t - 0.002)(250/3)$ = 0.656 (ACI 318-14 21.2) d = (L - 0.5D) = 221 in

DESIGN AXIAL AND MOMENT CAPACITIES AT THE BALANCED STRAIN CONDITION ARE 2015 kips AND 10307 ft-kips.

IN ACCORDANCE WITH ACI 318-14 21.2 THE DESIGN MOMENT CAPACITY WITHOUT AXIAL LOAD IS

$\phi M_n = 0.9\ M_n$ = 3068 kips.

TO KEEP TENSION SECTION WITH SHEAR CAPACITY PER ACI 11.5.4.6, THE PURE AXIAL TENSION CAPACITY IS

$-\phi P_n = -0.9\ MIN(A_{st} F_y\ ,\ 3.3\ f_c'^{0.5}\ 4\ L\ t\ )$ = -342 kips.

SUMMARY OF LOAD VERSUS MOMENT CAPACITIES ARE SHOWN IN THE TABLE BELOW, AND THEY ARE PLOTTED ON THE INTERACTION DIAGRAM AT FRONT PAGE.

		ϕP_n (kips)	ϕM_n (ft-kips)
AT AXIAL LOAD ONLY	=	3369	0
AT MAXIMUM LOAD	=	3369	6193
AT 0 % TENSION	=	3369	5600
AT 25 % TENSION	=	2952	8214
AT 50 % TENSION	=	2561	9449
AT ε_t = 0.002	=	2028	10203
AT BALANCED CONDITION	=	2015	10307
AT ε_t = 0.005	=	1627	12477
AT FLEXURE ONLY	=	0	3068
AT TENSION ONLY	=	-342	0

DESIGN FORCES P_u & M_u ARE ALSO PLOTTED ON THE INTERACTION DIAGRAM. FROM THE INTERACTION DIAGRAM.

THE ALLOWABLE MOMENT AT AN AXIAL LOAD P_u IS GIVEN BY

ϕM_n = 3496 kips. > M_u [Satisfactory]

where $\phi = Min\{0.9, Max[0.65 + (\varepsilon_t - 0.002)(250/3)\ ,\ 0.65]\}$ = 0.900 (ACI 318-14 21.2)

CHECK BOUNDARY ZONE REQUIREMENTS

AN EXEMPTION FROM THE PROVISION OF BOUNDARY ZONE CONFINEMENT REINFORCEMENT IS GIVEN BY ACI 318-14 18.10.6.2, 18.10.6.3, and 18.10.6.5(a) PROVIDED THAT

$c < (L\ h_w) / 1.5(600\ \delta_u)$ for ACI 21.9.6.2 apply or $f_c < 0.2\ f_c'$ for ACI 18.10.6.3 apply [Satisfactory]

where c = 16 in. (distance from the extreme compression fiber to neutral axis at P_u & M_n loads.)

δ_u = 0.8 in. (design displacement, assume $0.005h_w$ as a conservative short cut, see ACI 318-14 18.10.6.2.)

$f_c = (P_u / A) + (M_u\ y / I)$ = 0.305 ksi. (the maximum extreme fiber compressive stress at P_u & M_u loads.)

y = 113 in. (distance from the extreme compression fiber to neutral axis at P_u & M_u loads.)

A = 1851 in^2. (area of transformed section.)

I = 7808545 in^4. (moment of inertia of transformed section.)

Or the longitudinal reinforcement ratio at the wall end = 0.005 < $400 / f_y$ [Satisfactory]

HENCE BOUNDARY ZONE DETAIL REQUIREMENTS ARE NOT NECESSARY AND OMIT THE CALCULATIONS BELOW.

The boundary element length = MAX(c - 0.1L , 0.5 c) = 8.20 in. (ACI 318-14 18.10.6.4)

The maximum hoop spacing = MIN[B/4 , $6d_b$, 6 , $4+(14-h_x)/3$] = 8 in.o.c. (ACI 318-14 18.10.6.2 & 18.10.6.5)

$A_{sh,\ B\ DIR} = (0.09\ s\ h_c\ f_c')\ /\ f_{yh}$ = N/A in^2.

$A_{sh,\ L\ DIR} = (0.09\ s\ h_c\ f_c')\ /\ f_{yh}$ = N/A in^2.

THANG LE & ASSOCIATES TLA STRUCTURAL ENGINEERS

PROJECT :
CLIENT :
JOB NO. : DATE :

PAGE :
DESIGN BY :
REVIEW BY :

Special Reinforced Concrete Shear Wall Design Based on ACI 318-14 & 2016 CBC Chapter A — NS10

INPUT DATA

CONCRETE STRENGTH (ACI 318 19.2.1.1)	f_c' =	4	ksi, (28 MPa)	
REBAR YIELD STRESS	f_y =	60	ksi, (414 MPa)	
FACTORED AXIAL LOAD	P_u =	487	kips, (2166 kN)	
FACTORED MOMENT LOAD	M_u =	4758	ft-kips, (6451 kN-m)	
FACTORED SHEAR LOAD	V_u =	371	kips, (1650 kN)	
LENGTH OF SHEAR WALL	L =	38	ft, (11.58 m)	
THICKNESS OF WALL	t =	8	in, (203 mm)	
DEPTH AT FLANGE	D =	8	in, (203 mm)	
WIDTH AT FLANGE	B =	8	in, (203 mm)	
TOTAL WALL HEIGHT TO TOP	h_w =	13	ft, (3.96 m)	
REINF. BARS AT BULB		1 # 5		
WALL DIST. HORIZ. REINF.		1 # 4 @ 10	in, (254 mm) o.c.	
WALL DIST. VERT. REINF.		1 # 5 @ 12	in, (305 mm) o.c.	
HOOP REINF - WIDTH, B, DIR.		1 legs of # 4		
HOOP REINF - LENGTH DIR.		1 legs of # 4		
WALL EFFECTIVELY CONTINUOUS ?		Yes	(ACI 18.10.6.2 apply)	

DESIGN SUMMARY

SHEAR WALL LENGTH	L =	38.00	ft, (11.58 m)	
SHEAR WALL THICKNESS	t =	8.00	in, (203 mm)	
END REINFORCING	1 # 5			
WALL HORIZ. REINF	1 # 4 @ 10		in. (254 mm), o.c.	
WALL VERT. REINF	1 # 5 @ 12		in. (305 mm), o.c.	
HOOP REINF - WIDTH, B, DIR.				
HOOP REINF - LENGTH DIR.				

THE WALL DESIGN IS ADEQUATE

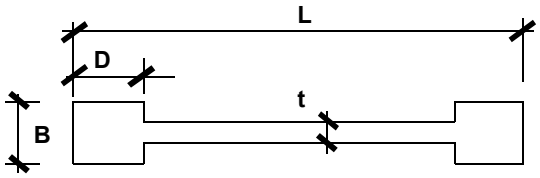

ANALYSIS

DETERMINE WHETHER THE WALL CAN RESIST SEISMIC LOADS (2016 CBC 1905A)

Pu = 487 k < 0.35 A_g f_c' = 5107 k [Satisfactory]

where A_g = 3648 in^2.

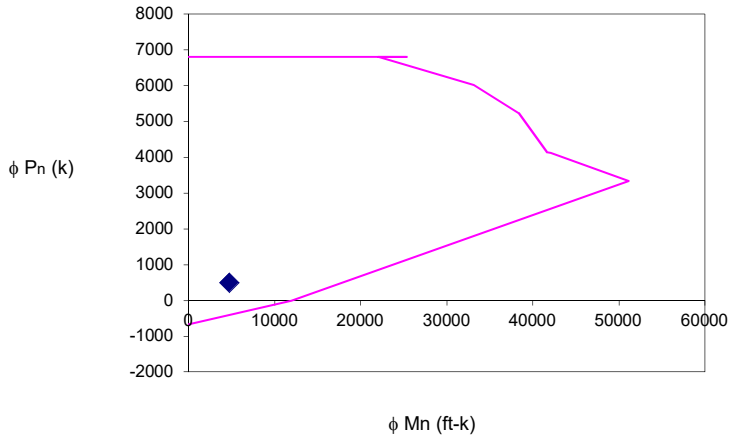

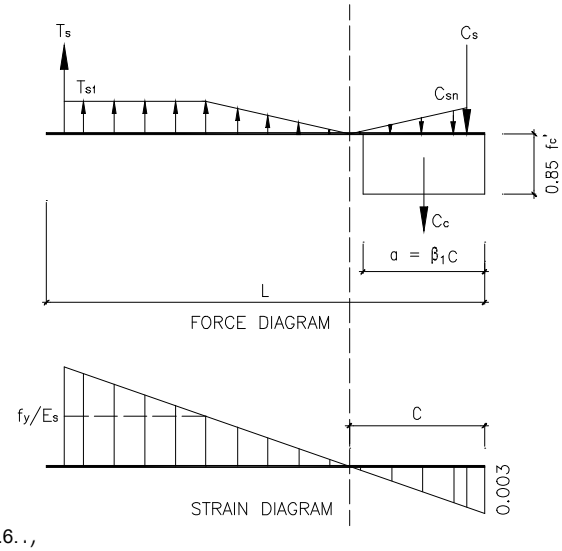

CHECK MINIMUM REINFORCEMENT RATIOS AND SPACING (ACI 318-14 18.10.2.1 & 11.6. . ,

$(\rho_t)_{min.}$ = 0.0025 [for $A_{cv}(f_c')^{0.5}$ = 230.72 kips < Vu , and bar size # 4 horizontal]

$(\rho_l)_{min.}$ = 0.0025 [for $A_{cv}(f_c')^{0.5}$ = 230.72 kips < Vu , and bar size # 5 vertical]

$(\rho_t)_{provd.}$ = 0.0025 > $\rho(_t)_{min.}$ [Satisfactory]

$(\rho_l)_{provd.}$ = 0.0032 > $(\rho_l)_{min.}$ [Satisfactory]

where A_{cv} = 3648 in^2 (gross area of concrete section bounded by web thickness and length in the shear direction)

The proposed spacing is less than the maximum permissible value of 18 in and is satisfactory. Since wall V_u < $2 A_{cv}(f_c')^{0.5}$, one curtain reinforcement required. (ACI 318-14 18.10.2.2)

CHECK SHEAR CAPACITY (ACI 318-14 18.10.4.1 & 18.10.4.4)

ϕV_n =MIN [$\phi A_{cv}(\alpha_c (f_c')^{0.5} + \rho_t f_y)$, $\phi 8 A_{cv}(f_c')^{0.5}$] = 743.62 kips > V_u [Satisfactory]

where ϕ = 0.60 (conservatively, ACI 318-14 21.2)

α_c = 3.0 (for h_w / L = 0.34 < 1.5)

ρ_l > ρ_t [Satisfactory] (only for h_w / L > 2.0, ACI 318-14 18.10.4.3)

(cont'd)

CHECK FLEXURAL & AXIAL CAPACITY

MAXIMUM DESIGN AXIAL LOAD STRENGTH (ACI 318-14 18 & 22.4)

$\phi P_{max} = 0.8\ \phi\ [\ 0.85\ f_c'\ (A_g - A_{st}) + f_y A_{st}]$ = 6811.6 kips. > P_u [Satisfactory]

where ϕ = 0.65 (ACI 318-14 21.2)

A_{st} = 12.30 in^2.

DESIGN MOMENT CAPACITY AT MAXIMUM AXIAL LOAD STRENGTH ARE FROM 0 TO 25339 ft-kips.

FOR THE BALANCED STRAIN CONDITION UNDER COMBINED FLEXURE AND AXIAL LOAD, THE MAXIMUM STRAIN IN THE CONCRETE AND IN THE TENSION REINFORCEMENT MUST SIMULTANEOUSLY REACH THE VALUES SPECIFIED IN ACI 318-14 21.2.2

AS ε_c = 0.003 AND $\varepsilon_t = f_y / E_s$ = 0.002069 . THE DEPTH TO THE NEUTRAL AXIS AND EQUIVALENT RECTANGULAR CONCRETE STRESS BLOCK ARE GIVEN BY

$C_b = d\ \varepsilon_c / (\varepsilon_c + \varepsilon_s)$ = 268 in $a = C_b\ \beta_1$ = 227 in β_1 = 0.85 (ACI 318-14 22.2.2.4.3)

$\phi = 0.65 + (\varepsilon_t - 0.002)(250/3)$ = 0.656 (ACI 318-14 21.2) d = (L - 0.5D) = 452 in

DESIGN AXIAL AND MOMENT CAPACITIES AT THE BALANCED STRAIN CONDITION ARE 4123 kips AND 42055 ft-kips.

IN ACCORDANCE WITH ACI 318-14 21.2 THE DESIGN MOMENT CAPACITY WITHOUT AXIAL LOAD IS

$\phi M_n = 0.9\ M_n$ = 11997 kips.

TO KEEP TENSION SECTION WITH SHEAR CAPACITY PER ACI 11.5.4.6, THE PURE AXIAL TENSION CAPACITY IS

$-\phi P_n = -0.9\ MIN(A_{st} F_y\ ,\ 3.3\ f_c'^{0.5}\ 4\ L\ t\ )$ = -664 kips.

SUMMARY OF LOAD VERSUS MOMENT CAPACITIES ARE SHOWN IN THE TABLE BELOW, AND THEY ARE PLOTTED ON THE INTERACTION DIAGRAM AT FRONT PAGE.

		ϕP_n (kips)	ϕM_n (ft-kips)
AT AXIAL LOAD ONLY	=	6812	0
AT MAXIMUM LOAD	=	6812	25339
AT 0 % TENSION	=	6812	22072
AT 25 % TENSION	=	6027	33139
AT 50 % TENSION	=	5232	38387
AT ε_t = 0.002	=	4150	41625
AT BALANCED CONDITION	=	4123	42055
AT ε_t = 0.005	=	3341	51127
AT FLEXURE ONLY	=	0	11997
AT TENSION ONLY	=	-664	0

DESIGN FORCES P_u & M_u ARE ALSO PLOTTED ON THE INTERACTION DIAGRAM. FROM THE INTERACTION DIAGRAM.

THE ALLOWABLE MOMENT AT AN AXIAL LOAD P_u IS GIVEN BY

ϕM_n = 19883 kips. > M_u [Satisfactory]

where $\phi = Min\{0.9, Max[0.65 + (\varepsilon_t - 0.002)(250/3)\ ,\ 0.65]\}$ = 0.900 (ACI 318-14 21.2)

CHECK BOUNDARY ZONE REQUIREMENTS

AN EXEMPTION FROM THE PROVISION OF BOUNDARY ZONE CONFINEMENT REINFORCEMENT IS GIVEN BY ACI 318-14 18.10.6.2, 18.10.6.3, and 18.10.6.5(a) PROVIDED THAT

$c < (L\ h_w) / 1.5(600\ \delta_u)$ for ACI 21.9.6.2 apply or $f_c < 0.2\ f_c'$ for ACI 18.10.6.3 apply [Satisfactory]

where c = 49 in. (distance from the extreme compression fiber to neutral axis at P_u & M_n loads.)

δ_u = 0.8 in. (design displacement, assume $0.005h_w$ as a conservative short cut, see ACI 318-14 18.10.6.2.)

$f_c = (P_u / A) + (M_u\ y / I)$ = 0.330 ksi. (the maximum extreme fiber compressive stress at P_u & M_u loads.)

y = 228 in. (distance from the extreme compression fiber to neutral axis at P_u & M_u loads.)

A = 3747 in^2. (area of transformed section.)

I = 64926616 in^4. (moment of inertia of transformed section.)

Or the longitudinal reinforcement ratio at the wall end = 0.005 < $400 / f_y$ [Satisfactory]

HENCE BOUNDARY ZONE DETAIL REQUIREMENTS ARE NOT NECESSARY AND OMIT THE CALCULATIONS BELOW.

The boundary element length = MAX(c - 0.1L , 0.5 c) = 24.34 in. (ACI 318-14 18.10.6.4)

The maximum hoop spacing = MIN[B/4 , $6d_b$, 6 , $4+(14-h_x)/3$] = 8 in.o.c. (ACI 318-14 18.10.6.2 & 18.10.6.5)

$A_{sh,\ B\ DIR} = (0.09\ s\ h_c\ f_c')\ /\ f_{yh}$ = N/A in^2.

$A_{sh,\ L\ DIR} = (0.09\ s\ h_c\ f_c')\ /\ f_{yh}$ = N/A in^2.

THANG LE & ASSOCIATES TLA STRUCTURAL ENGINEERS

PROJECT :
CLIENT :
JOB NO. : DATE :

PAGE :
DESIGN BY :
REVIEW BY :

Special Reinforced Concrete Shear Wall Design Based on ACI 318-14 & 2016 CBC Chapter A — NS11

INPUT DATA

CONCRETE STRENGTH (ACI 318 19.2.1.1)	f_c' =	4	ksi, (28 MPa)	
REBAR YIELD STRESS	f_y =	60	ksi, (414 MPa)	
FACTORED AXIAL LOAD	P_u =	117	kips, (520 kN)	
FACTORED MOMENT LOAD	M_u =	2683	ft-kips, (3638 kN-m)	
FACTORED SHEAR LOAD	V_u =	217	kips, (965 kN)	
LENGTH OF SHEAR WALL	L =	26	ft, (7.92 m)	
THICKNESS OF WALL	t =	8	in, (203 mm)	
DEPTH AT FLANGE	D =	8	in, (203 mm)	
WIDTH AT FLANGE	B =	8	in, (203 mm)	
TOTAL WALL HEIGHT TO TOP	h_w =	13	ft, (3.96 m)	
REINF. BARS AT BULB		1 # 5		
WALL DIST. HORIZ. REINF.		1 # 4 @ 10	in, (254 mm) o.c.	
WALL DIST. VERT. REINF.		1 # 5 @ 12	in, (305 mm) o.c.	
HOOP REINF - WIDTH, B, DIR.		1 legs of # 4		
HOOP REINF - LENGTH DIR.		1 legs of # 4		
WALL EFFECTIVELY CONTINUOUS ?		Yes	(ACI 18.10.6.2 apply)	

DESIGN SUMMARY

SHEAR WALL LENGTH	L =	26.00	ft, (7.92 m)	
SHEAR WALL THICKNESS	t =	8.00	in, (203 mm)	
END REINFORCING	1 # 5			
WALL HORIZ. REINF	1 # 4 @ 10		in. (254 mm), o.c.	
WALL VERT. REINF	1 # 5 @ 12		in. (305 mm), o.c.	
HOOP REINF - WIDTH, B, DIR.				
HOOP REINF - LENGTH DIR.				

THE WALL DESIGN IS ADEQUATE

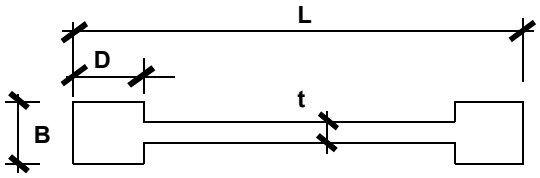

ANALYSIS

DETERMINE WHETHER THE WALL CAN RESIST SEISMIC LOADS (2016 CBC 1905A)

Pu = 117 k < 0.35 A_g f_c' = 3494 k [Satisfactory]

where A_g = 2496 in^2.

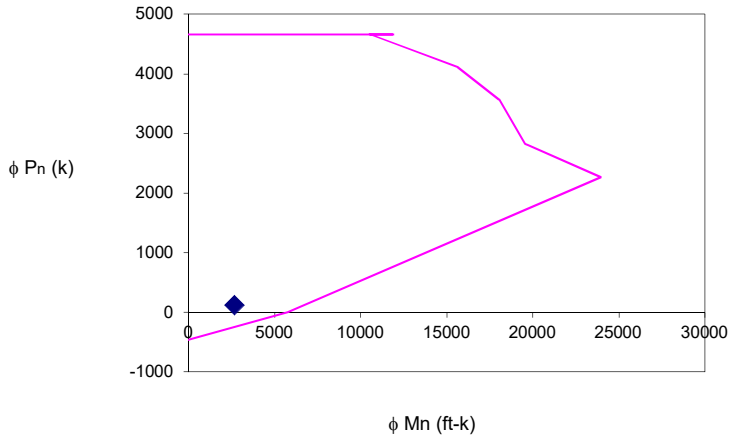

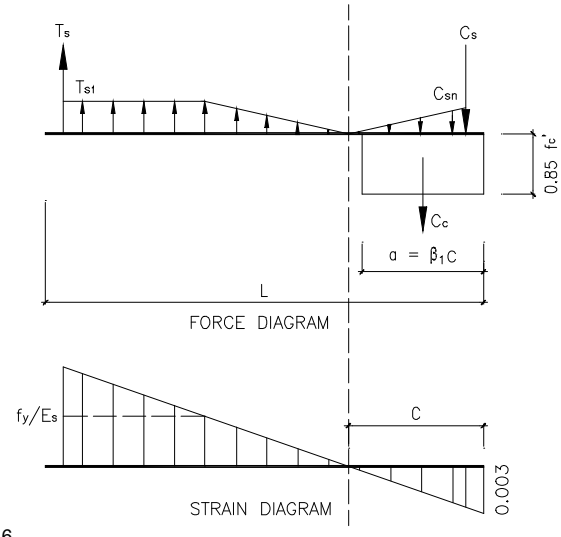

CHECK MINIMUM REINFORCEMENT RATIOS AND SPACING (ACI 318-14 18.10.2.1 & 11.6. . ,

$(\rho_t)_{min.}$ = 0.0025 [for $A_{cv}(f_c')^{0.5}$ = 157.86 kips < Vu , and bar size # 4 horizontal]

$(\rho_l)_{min.}$ = 0.0025 [for $A_{cv}(f_c')^{0.5}$ = 157.86 kips < Vu , and bar size # 5 vertical]

$(\rho_t)_{provd.}$ = 0.0025 > $\rho(_t)_{min.}$ [Satisfactory]

$(\rho_l)_{provd.}$ = 0.0032 > $(\rho_l)_{min.}$ [Satisfactory]

where A_{cv} = 2496 in^2 (gross area of concrete section bounded by web thickness and length in the shear direction)

The proposed spacing is less than the maximum permissible value of 18 in and is satisfactory. Since wall V_u < $2 A_{cv}(f_c')^{0.5}$, one curtain reinforcement required. (ACI 318-14 18.10.2.2)

CHECK SHEAR CAPACITY (ACI 318-14 18.10.4.1 & 18.10.4.4)

ϕV_n =MIN [$\phi A_{cv}(\alpha_c (f_c')^{0.5} + \rho_t f_y)$, $\phi 8 A_{cv}(f_c')^{0.5}$] = 508.79 kips > V_u [Satisfactory]

where ϕ = 0.60 (conservatively, ACI 318-14 21.2)

α_c = 3.0 (for h_w / L = 0.50 < 1.5)

ρ_l > ρ_t [Satisfactory] (only for h_w / L > 2.0, ACI 318-14 18.10.4.3)

(cont'd)

CHECK FLEXURAL & AXIAL CAPACITY

MAXIMUM DESIGN AXIAL LOAD STRENGTH (ACI 318-14 18 & 22.4)

$\phi P_{max} = 0.8\ \phi\ [\ 0.85\ f_c'\ (A_g - A_{st}) + f_y A_{st}]$ = 4665.4 kips. > P_u [Satisfactory]

where ϕ = 0.65 (ACI 318-14 21.2)

A_{st} = 8.58 in^2.

DESIGN MOMENT CAPACITY AT MAXIMUM AXIAL LOAD STRENGTH ARE FROM 0 TO 11884 ft-kips.

FOR THE BALANCED STRAIN CONDITION UNDER COMBINED FLEXURE AND AXIAL LOAD, THE MAXIMUM STRAIN IN THE CONCRETE AND IN THE TENSION REINFORCEMENT MUST SIMULTANEOUSLY REACH THE VALUES SPECIFIED IN ACI 318-14 21.2.2

AS ε_c = 0.003 AND $\varepsilon_t = f_y / E_s$ = 0.002069 . THE DEPTH TO THE NEUTRAL AXIS AND EQUIVALENT RECTANGULAR CONCRETE STRESS BLOCK ARE GIVEN BY

$C_b = d\ \varepsilon_c / (\varepsilon_c + \varepsilon_s)$ = 182 in $a = C_b\ \beta_1$ = 155 in β_1 = 0.85 (ACI 318-14 22.2.2.4.3)

$\phi = 0.65 + (\varepsilon_t - 0.002)(250/3)$ = 0.656 (ACI 318-14 21.2) d = (L - 0.5D) = 308 in

DESIGN AXIAL AND MOMENT CAPACITIES AT THE BALANCED STRAIN CONDITION ARE 2809 kips AND 19748 ft-kips.

IN ACCORDANCE WITH ACI 318-14 21.2 THE DESIGN MOMENT CAPACITY WITHOUT AXIAL LOAD IS

$\phi M_n = 0.9\ M_n$ = 5743 kips.

TO KEEP TENSION SECTION WITH SHEAR CAPACITY PER ACI 11.5.4.6, THE PURE AXIAL TENSION CAPACITY IS

$-\phi P_n = -0.9\ MIN(A_{st} F_y\ ,\ 3.3\ f_c'^{0.5}\ 4\ L\ t\ )$ = -463 kips.

SUMMARY OF LOAD VERSUS MOMENT CAPACITIES ARE SHOWN IN THE TABLE BELOW, AND THEY ARE PLOTTED ON THE INTERACTION DIAGRAM AT FRONT PAGE.

		ϕP_n (kips)	ϕM_n (ft-kips)
AT AXIAL LOAD ONLY	=	4665	0
AT MAXIMUM LOAD	=	4665	11884
AT 0 % TENSION	=	4665	10530
AT 25 % TENSION	=	4110	15642
AT 50 % TENSION	=	3567	18061
AT ε_t = 0.002	=	2827	19547
AT BALANCED CONDITION	=	2809	19748
AT ε_t = 0.005	=	2273	23961
AT FLEXURE ONLY	=	0	5743
AT TENSION ONLY	=	-463	0

DESIGN FORCES P_u & M_u ARE ALSO PLOTTED ON THE INTERACTION DIAGRAM. FROM THE INTERACTION DIAGRAM.

THE ALLOWABLE MOMENT AT AN AXIAL LOAD P_u IS GIVEN BY

ϕM_n = 7078 kips. > M_u [Satisfactory]

where $\phi = Min\{0.9, Max[0.65 + (\varepsilon_t - 0.002)(250/3)\ ,\ 0.65]\}$ = 0.900 (ACI 318-14 21.2)

CHECK BOUNDARY ZONE REQUIREMENTS

AN EXEMPTION FROM THE PROVISION OF BOUNDARY ZONE CONFINEMENT REINFORCEMENT IS GIVEN BY ACI 318-14 18.10.6.2, 18.10.6.3, and 18.10.6.5(a) PROVIDED THAT

$c < (L\ h_w) / 1.5(600\ \delta_u)$ for ACI 21.9.6.2 apply or $f_c < 0.2\ f_c'$ for ACI 18.10.6.3 apply [Satisfactory]

where c = 24 in. (distance from the extreme compression fiber to neutral axis at P_u & M_n loads.)

δ_u = 0.8 in. (design displacement, assume $0.005h_w$ as a conservative short cut, see ACI 318-14 18.10.6.2.)

$f_c = (P_u / A) + (M_u\ y / I)$ = 0.287 ksi. (the maximum extreme fiber compressive stress at P_u & M_u loads.)

y = 156 in. (distance from the extreme compression fiber to neutral axis at P_u & M_u loads.)

A = 2565 in^2. (area of transformed section.)

I = 20807232 in^4. (moment of inertia of transformed section.)

Or the longitudinal reinforcement ratio at the wall end = 0.005 < $400 / f_y$ [Satisfactory]

HENCE BOUNDARY ZONE DETAIL REQUIREMENTS ARE NOT NECESSARY AND OMIT THE CALCULATIONS BELOW.

The boundary element length = MAX(c - 0.1L , 0.5 c) = 12.21 in. (ACI 318-14 18.10.6.4)

The maximum hoop spacing = MIN[B/4 , $6d_b$, 6 , $4+(14-h_x)/3$] = 8 in.o.c. (ACI 318-14 18.10.6.2 & 18.10.6.5)

$A_{sh,\ B\ DIR} = (0.09\ s\ h_c\ f_c')\ /\ f_{yh}$ = N/A in^2.

$A_{sh,\ L\ DIR} = (0.09\ s\ h_c\ f_c')\ /\ f_{yh}$ = N/A in^2.

(1)
(72.3, 173.8)
(2)
(259, 173.6)
(5)
(64.3, 149.4)
(6)
(271.3, 148.6)
(7)
(64.04, 60.27)
(8)
(271.2, 60.3)
(3)
(71.8, 39.6)
(4)
(259.7, 39.3)

DRIFT CALCULATION
Project: Essex Tower
Building Code: ASCE 7-16

LOAD CASE DEFINITIONS:

E1	Drift	EQ_ASCE710_X_+E_Drft
E2	Drift	EQ_ASCE710_X_-E_Drft
E3	Drift	EQ_ASCE710_Y_+E_Drft
E4	Drift	EQ_ASCE710_Y_-E_Drft

RESULTS:	PODIUM LEVEL															
POINT	**1 - 1**		**1 - 2**		**1 - 3**		**1 - 4**		**1 - 5**		**1-6**		**1-7**		**1-8**	
LOAD CASES	**Story Drift**		**Story Drift**		**Story Drift**		**Story Drift**		**Story Drift**		**Story Drift**		**Story Drift**		**Story Drift**	
	X	Y	X	Y	X	Y	X	Y	X	Y	X	Y	X	Y	X	Y
	in	in	in	in	in	in	in	in	in	in	in	in	in	in	in	in
E1	0.0355	0.0048	0.0388	-0.0037	0.0272	0.0066	0.0339	-0.0074	0.0332	0.0034	0.0359	-0.0038	0.0316	0.0061	0.0302	-0.0071
E2	0.0301	0.0004	0.034	-0.0009	0.0309	0.0034	0.0273	-0.0049	0.0296	-0.0013	0.0322	0.0002	0.035	0.0018	0.0335	-0.0032
E3	-0.0025	0.0235	0.0051	0.0227	0.0053	0.0202	-0.0037	0.025	-0.0027	0.0223	0.0015	0.0261	0.0023	0.0212	-0.0011	0.0264
E4	0.0021	0.0321	0.0087	0.0268	0.0033	0.0272	-0.0054	0.0189	-0.0002	0.0308	0.0042	0.0288	0.0005	0.0293	-0.0024	0.0292

-Results shown in table do not have Cd amplification factor applied.

Allowable Story Drift	$0.007h_{sx}$	(Table 12.12-1 Allowable Story Drift, ASCE/SEI 7-16)	
Building Height			
1st Floor	13	ft	
Total Height	13	ft	
Response Modification Coef. R^a	5	(Table 12.2-1 Building Frame Systems, ASCE/SEI 7-16)	
Deflection Amplificatoin Factor C_d^b	5	(Table 12.2-1 Building Frame Systems, ASCE/SEI 7-16)	
Allowable Story Drift			
Podium	1.092	in	

PODIUM LEVEL				
Point	**Max Drift /in/**	**C_d^b *Drift /in/**	**Check**	
1 - 1	0.0355	0.1775	< 2.4 in	OK
1 - 2	0.0388	0.194	< 2.4 in	OK
1 - 3	0.0309	0.1545	< 2.4 in	OK
1 - 4	0.0339	0.1695	< 2.4 in	OK
1 - 5	0.0332	0.166	< 2.4 in	OK
1 - 6	0.0359	0.1795	< 2.4 in	OK
1 - 7	0.035	0.175	< 2.4 in	OK
1 - 8	0.0335	0.1675	< 2.4 in	OK

STRUCTURE DOES NOT EXCEED ALLOWABLE DRIFT

HORIZONTAL IRREGULARITY CHECK

PODIUM LEVEL					
Transverse Axis	**Points Used**	**Average Drift /in/**	**Maximum Drift A_x=1**	**Max/Avg**	**Torsional Irregularity**
Y	1 & 2 (E3)	0.0231	0.0235	1.017	OK
Y	1 & 2 (E4)	0.02945	0.0321	1.090	OK
Y	3 & 4 (E3)	0.0226	0.025	1.106	OK
Y	3 & 4 (E4)	0.02305	0.0272	1.180	OK
Y	5 & 6 (E3)	0.0242	0.0261	1.079	OK
Y	5 & 6 (E4)	0.0298	0.0308	1.034	OK
Y	7 & 8 (E3)	0.0238	0.0264	1.109	OK
Y	7 & 8 (E4)	0.02925	0.0293	1.002	OK
X	1 & 3 (E1)	0.03135	0.0355	1.132	OK
X	1 & 3 (E2)	0.0305	0.0309	1.013	OK
X	2 & 4 (E1)	0.03635	0.0388	1.067	OK
X	2 & 4 (E2)	0.03065	0.034	1.109	OK
X	5 & 7 (E1)	0.0324	0.0332	1.025	OK
X	5 & 7 (E2)	0.0323	0.035	1.084	OK
X	6 & 8 (E1)	0.03305	0.0359	1.086	OK
X	6 & 8 (E2)	0.03285	0.034	1.035	OK

IRREGULAR TORSIONAL DRIFT NOT FOUND IN ANALYSIS

THANG LE, S.E.
STRUCTURAL ENGINEER
Phone: (626) 731-1539 Fax: (626) 447-3400

MISCELLANEOUS

SHEET NO: H1

PROJECT NO:

THANG LE, S.E.
STRUCTURAL ENGINEER

3029 Eisenhower Ave., Arcadia, CA 91006
Phone: (626) 731-1539 Fax: (626) 447-3400

Project: ESSEX TOWER **Mark:** RTU

MECHANICAL COMPONENT SEISMIC DESIGN

SHORT PERIOD RESPONSE:	Ss =	1.5 g
1 SECOND PERIOD RESPONSE:	S1 =	0.6 g
SEISMIC DESIGN CATEGORY:		E
DESIGN RESPONSE:	Sds =	1.2 g

PER SECTION 1621.1.4 IBC, DESIGN FOR TOTAL LATERAL FORCE

$$Fp = \frac{0.4ap*Sds*Wp}{Rp/Ip}(1 + 2*z/h)$$

ap = 2.5
Rp = 6.0
Ip = 1.0

Except that : Fp should not be less than 0.3*Sds*Ip*Wp and need not be more than 1.6*Sds*Ip*Wp

0.3*Sds*Ip =	0.360	Wp
1.6*Sds*Ip =	1.920	Wp
Fp =	0.600	Wp

MECHANICAL WEIGHT = 500 lbs

Fp = 0.600 x 500 lbs = **300 lbs**

(6)-#10 SCREWS AT EACH SIDE

CAPACITY = 6 * 2 * 110 lbs/screw * 1.6 = 2112 lbs > 300 lbs **<< O.K.**

CHECK FOR UPLIFT

OVERTURNING MOMENT = 300 lbs * 1.5 ft = 450 lbs-ft

RESISTING MOMENT = 0.5 * 500 lbs * 3 ft = 750 lbs-ft

F.S. = 750 lbs-ft / 450 lbs-ft = 1.67 > 1 **<< O.K.**

USE: (6)-#10 SCREWS AT EACH SIDE