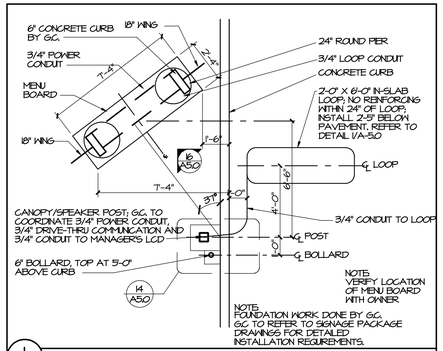

1 MENU BOARD AND SPEAKER POST 1"

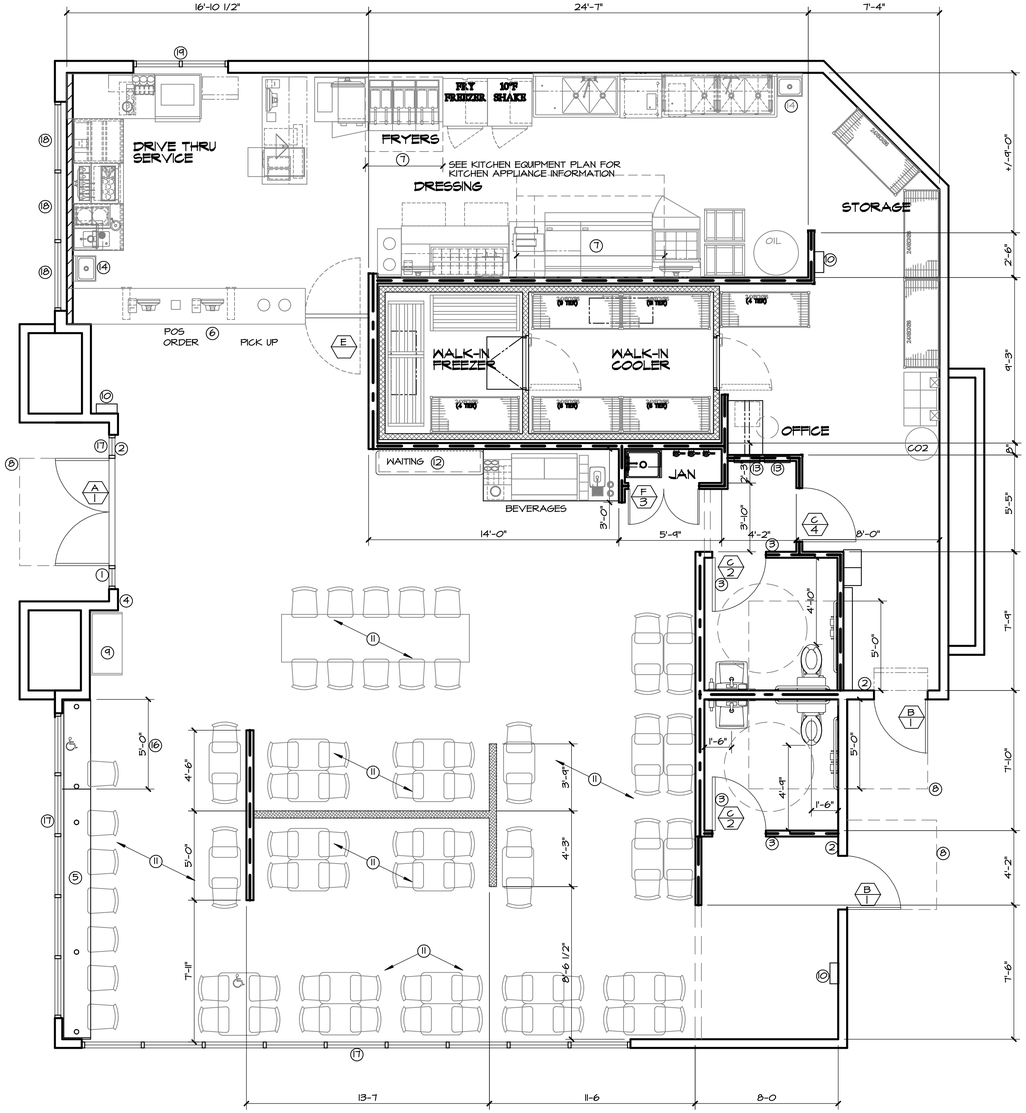

N

FLOOR PLAN 1/4"

WALL LEGEND

- EXISTING EXTERIOR WALL CONSTRUCTION TO REMAIN ADD 5/8" TYPE 'X' GYP BD ON INTERIOR FACE PROVIDE INSULATION PER TITLE 24
- EXISTING STOREFRONT TO REMAIN
- 3 5/8" 20 GA METAL STUDS AT 16" O.C. WITH 5/8" GYP BOARD EACH SIDE TO THE UNDERSIDE OF EXISTING ROOF STRUCTURE WITH INSULATION FOR SOUND (NON-RATED) SEE DETAIL 1, SHEET A-5.0
- 3 5/8" 20 GA METAL STUDS AT 16" O.C. WITH 5/8" GYP BOARD ON INTERIOR FACE TO 6" ABOVE ADJACENT CEILING WITH INSULATION
- 6" 20 GA METAL STUDS AT 16" O.C. WITH 5/8" GYP BOARD EACH SIDE TO THE UNDERSIDE OF EXISTING ROOF STRUCTURE WITH INSULATION FOR SOUND (NON-RATED) SEE DETAIL 1, SHEET A-5.0
- PARTIAL HEIGHT WALL (DASHED DENOTES BELOW COUNTER) WITH 3 5/8" 24 GA METAL STUDS AT 16" O.C. AND 5/8" GYP BOARD EACH SIDE-
- INSULATED WALL FOR FREEZER (PROVIDED BY VENDOR)

KEYNOTES

1. 5X5 HC ACCESSIBILITY SIGNAGE
2. HC EXIT SIGN WITH BRAILLE
3. RESTROOM HC ACCESSIBILITY SIGNAGE
4. POST "MAXIMUM OCCUPANTS" SIGN(S) IN A CONSPICUOUS PLACE, NEAR THE MAIN EXIT OR EXIT ACCESS DOORWAY FROM THE ROOM OR SPACE IN AN APPROVED LEGIBLE PERMANENT DESIGN PER CBC SECTION 1004.3
5. 18" DEEP COUNTER 42" AFF- PROVIDED BY VENDOR
6. 30" DEEP SERVICE COUNTER 34" AFF TALL- PROVIDED BY VENDOR
7. STAINLESS STEEL WALL PANELS AS PART OF THE COMMERCIAL HOOD. 3" GAP BETWEEN THE STAINLESS STEEL AND THE WALL
8. 5'-0"X5'-0" CLEAR LEVEL LANDING WITH CROSS SLOPE NOT TO EXCEED 2%
9. TRASH RECEPTACLE BY OWNER
10. SURFACE MOUNTED FIRE EXTINGUISHER CABINET PER CITY OF BAKERSFIELD REQUIREMENTS
11. SEATING BY OWNER
12. BENCH SEATING BY OWNER
13. ELECTRICAL PANELS
14. PROVIDE COMMERCIAL APPROVED SOAP AND PAPER TOWEL DISPENSER AT HAND WASH SINK
15. BEVERAGE COUNTER PROVIDED BY VENDOR - 40" AFF OPERABLE PARTS
16. ACCESSIBLE COUNTER TOP @ 34" O.C.
17. EXISTING STOREFRONT TO REMAIN
18. EXISTING STOREFRONT TO REMAIN PROVIDE DARK TINT
19. EXISTING DRIVE THRU WINDOW

DOOR SCHEDULE

- A — EXISTING STOREFRONT DOOR WITH 10" MINIMUM KICKPLATES AND ENTRANCE HARDWARE TO REMAIN - TEMPERED GLASS - VERIFY EXISTING CORRECT AS NECESSARY
- B — EXISTING 3'-0"x 7'-0" DOOR
- C — 3'-0"x 7'-0" SOLID CORE DOOR LAMINATE FINISH
- D — 3'-0"x 7'-0" INSULATED DOOR PROVIDED BY REFRIGERATION VENDOR
- E — 3'-0"x 3'-6" DOUBLE SWING DOOR
- F — PAIR 2'-0"x 7'-0" SOLID CORE DOOR WITH LAMINATE FINISH

HARDWARE SCHEDULE

INTERIOR HARDWARE TO BE CLEAR ANODIZED ALUMINUM

1 — EXISTING HARDWARE - REKEY

2	1 1/2 PAIR HINGES	4 1/2"x4 1/2" #BB1279 BY "HAGAR"
	LOCK SET	PRIVACY LOCK #AL40S BY "SCHLAGE"
	CLOSER	#4460 BY "LCN"
	DOOR STOP	WALL MOUNTED BY "QUALITY"
3	1 1/2 PAIR HINGES	4 1/2"x4 1/2" #BB1279 BY "HAGAR"
	LOCK SET	STORAGE LOCK #ALBOFD BY "SCHLAGE"
	FLUSH BOLT	FB31T BY "IVES"
	DOOR STOP	WALL MOUNTED BY "QUALITY"
4	1 1/2 PAIR HINGES	4 1/2"x4 1/2" #BB1279 BY "HAGAR"
	LOCK SET	PASSAGE LATCH #AL10S BY "SCHLAGE"
	CLOSER	#4460 BY "LCN"
	DOOR STOP	WALL MOUNTED BY "QUALITY"

PAUL DHANENS • ARCHITECT

ARCHITECT

LICENSED ARCHITECT PAUL DHANENS NO. C-23843 RENEWAL STATE OF CALIFORNIA

5100 CALIFORNIA AVE. SUITE 107
BAKERSFIELD, CALIFORNIA 93308
TELEPHONE: (661) 326-8936
FACSIMILE: (661) 326-8937

CONSULTANT

COPYRIGHT

PAUL DHANENS ARCHITECT expressly reserves its copyright and other property rights in these documents which are not to be reproduced, changed or copied in any written, graphic or electronic form, nor assigned to any third party without the expressed written consent of PAUL DHANENS ARCHITECT.

NOTICE TO CONTRACTORS
Written dimensions on these drawings shall take precedence over scaled dimensions. Contractor shall verify and be responsible for confirming all dimensions and shall notify the architect immediately of any descripencies or field variations discovered.

PROJECT

TENANT IMPROVEMENT FOR

FAMOUS FOR Steak 'n Shake STEAKBURGERS

1966 WEST AVE L
LANCASTER, CA

DATE	ISSUED FOR
6-28-19	BUILDING DEPT SUBMITTAL

NO.	REVISIONS
1	
2	
3	
4	

FLOOR PLAN

FILE NAME: 2366A1-0

SHEET

A-1.0

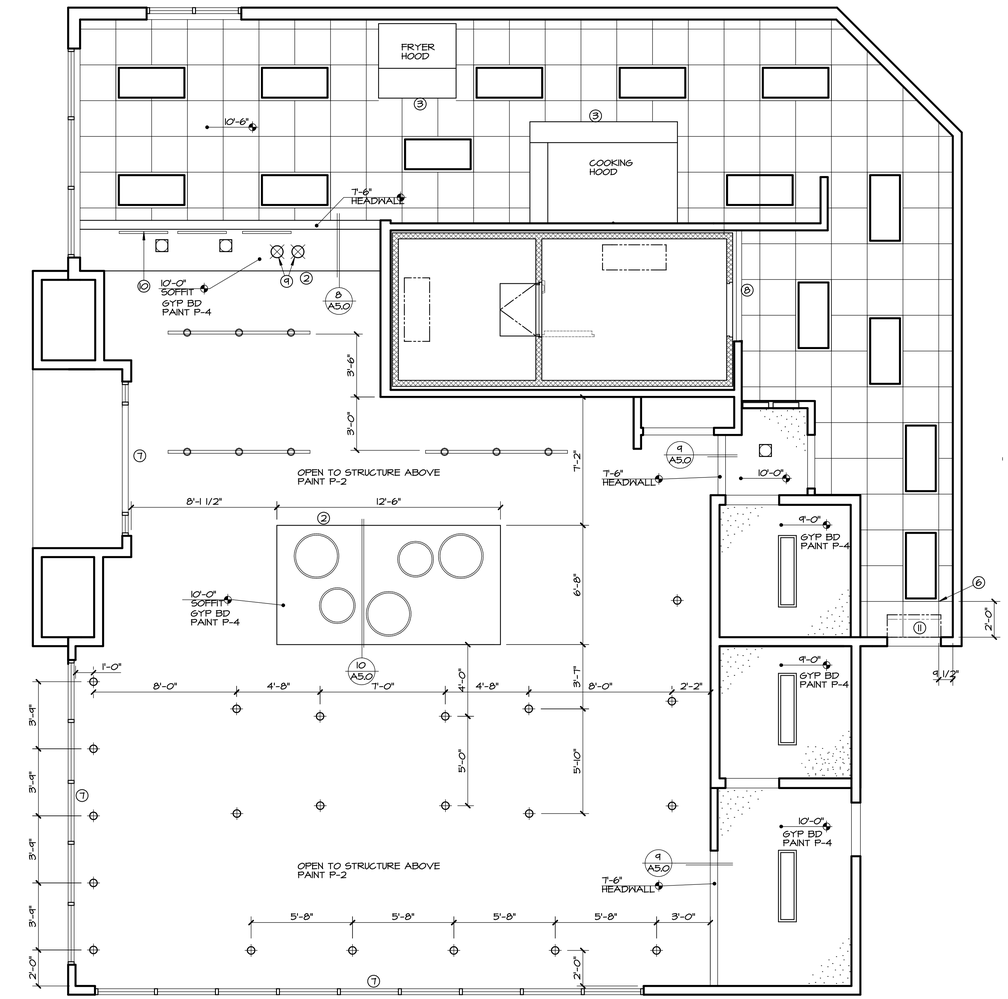

N

CEILING PLAN

1/4"

LEGEND

2x2 SUSPENDED CEILING GRID WITH "ARMSTRONG ULTIMA HEALTH ZONE #1445" SQUARE EDGE ; PRELUDE ML WHITE EXPOSED TEE 15/16" GRID SEE DETAIL 5&6/A-5.0

GYP BD CEILING SYSTEM WITH USG 5/8" TYPE 'X' GYP BD SEE DETAIL 7/A-5.0

NEW 2x4 RECESSED MOUNTED LED LIGHT FIXTURE WITH ACRYLIC PRISMATIC LENS

1x4 RECESSED MOUNTED LED LIGHT FIXTURE CENTER IN ROOM - U.N.O.

RECESSED MOUNTED DOWN LIGHT - CENTER IN SOFFIT EACH WAY UNLESS NOTED OTHERWISE

PENDANT LIGHT FIXTURE

24" 36" DRUM SHADE LIGHT FIXTURE

HOT LAMP

TRACK LIGHTING

CEILING PLAN NOTES

1. ALL CEILING GRIDS SHALL BE CENTERED IN ROOMS AS SHOWN UNLESS NOTED OTHERWISE
2. BRACE ALL NEW AND RELOCATED LIGHT FIXTURES AND MECHANICAL DUCTS TO STRUCTURE PER CBC, CEC, AND CMC REQUIREMENTS
3. EXISTING FLOOR CEILING ASSEMBLY IS EXISTING 1-HR RATED PER BUILDING SHELL. THE ASSEMBLY IS USGA #FC5407

CEILING JOIST SPAN TABLE - 6" METAL STUDS

THICKNESS	13 PSF - MIDSPAN		
	12" O.C.	16" O.C.	24" O.C.
25 GA	9'-0"	7'-11"	6'-7"
22 GA	10'-9"	9'-8"	8'-3"
20 GA	11'-9"	10'-9"	9'-2"
18 GA	12'-10"	11'-9"	10'-4"

CEILING KEYNOTES

1. GYP. BD SOFFIT. REFER TO A-702 FOR ATTACHMENT DETAILS.
2. LINE OF GYPSUM BOARD SOFFIT ABOVE
3. LINE OF HOOD. EXTEND FACE OF STAINLESS STEEL ABOVE HOOD TO 6" MINIMUM ABOVE A.C.T. HOOD FURNISHED BY KITCHEN VENDOR, INSTALLED BY G.C.
4. GRAPHIC MESSAGE ON FACE OF SOFFIT. COORDINATE LOCATION WITH GRAPHICS VENDOR.
5. LIGHTING BUILT IN TO FREEZER AND COOLER UNITS. G.C. TO COORDINATE INSTALLATION WITH KITCHEN VENDOR AND ELECTRICAL DRAWINGS
6. STARTING POINT OF A.C.T.
7. ALL ITEMS ABOVE STOREFRONT VISIBLE FROM DINING AREA, INCLUDING TRUSSES, TO BE PAINTED
8. TRIM PANELS PROVIDED BY KITCHEN VENDOR TO EXTEND ABOVE FREEZER/COOLER TO 6" ABOVE A.C.T. MINIMUM.
9. HEAT LAMPS BY KITCHEN DESIGNER; CENTER MIDDLE LIGHT ABOVE 3'-0" SECTION OF COUNTER BELOW 16" ABOVE COUNTER.
10. MENU BOARDS- REFER TO GRAPHIC PACKAGE - INSTALLED BY SIGN VENDOR
11. AIR CURTAIN

GENERAL NOTES:

1. CEILING TILES TO BE CENTERED BOTH WAYS IN EACH ROOM OR SPACE UNLESS DIMENSIONED OTHERWISE.
2. ALL DIMENSIONS ARE TO THE CENTER OF LIGHT FIXTURE, U.N.O.
3. FIXTURES LOCATED WITHIN THE CEILING GRID, ARE NOT NECESSARILY CENTERED IN EACH CEILING TILE. FOLLOW DIMENSIONS ON PLAN. IF NO DIMENSION IS PRESENT CONTACT ARCHITECT TO VERIFY LOCATION.
4. LIGHT FIXTURES TO BE LOCATED AS INDICATED ON THIS PLAN. REFER TO ELECTRICAL DRAWINGS FOR EXACT NUMBER AND TYPE OF LIGHT FIXTURE. CONTACT ARCHITECT/ENGINEER IMMEDIATELY IF THERE ARE ANY DISCREPANCIES.
5. REFER TO MECHANICAL DRAWINGS FOR MECHANICAL DUCT DISTRIBUTION SYSTEM.
6. THE G.C. SHALL SET ALL CEILING AND SOFFITS USING A LASER LEVEL TO ACHIEVE A CEILING THAT IS PLUMB, LEVEL, AND SQUARE TO ALL WALLS AND SOFFITS.
7. ALL NOTED CEILING DIMENSIONS ARE INDICATED AS CLEAR ABOVE FINISHED FLOOR DIMENSIONS. VERIFY THICKNESS OF FLOOR CONSTRUCTION WITH FLOOR SUBCONTRACTOR PRIOR TO THE INSTALLATION OF ANY NEW CEILING CONSTRUCTION IN ORDER TO ACHIEVE NOTED REQUIRED DIMENSIONS.
8. ALL SOFFIT DIMENSIONS ARE TO FINISH FACE, U.N.O.
9. ALL EXTERIOR DIMENSIONS ARE TO THE FACE OF EXTERIOR FINISH, U.N.O.
10. G.C. TO PROVIDE ADEQUATE CLEARANCES FOR FIXTURES, DUCTS, CEILING AND PERTINENT ITEMS NECESSARY TO MAINTAIN THE SPECIFIC HEIGHTS ABOVE FINISH FLOOR. COORDINATE MECHANICAL, ELECTRICAL AND PLUMBING AS REQUIRED.
11. ADDITIONAL HANGER AND SAFETY WIRES FOR LIGHT FIXTURES, SPEAKERS, AND AIR SUPPLY/RETURN DIFFUSERS AS REQUIRED BY LOCAL CODES TO BE THE RESPONSIBILITY OF THE SUB-CONTRACTOR. ALL WIRING SUPPORT TO BE "CEILING GRADE" AS CONCURRENT WITH ELECTRICAL CODE ADOPTED FOR JURISDICTION OF PROJECT.
12. G.C. TO COORDINATE DUCTWORK INSTALLATION WITH TRUSS INSTALLATION TO MAXIMIZE LENGTH OF DUCTWORK ABLE TO BE USED THROUGH TRUSSES.

PAUL DHANENS • ARCHITECT

ARCHITECT

LICENSED ARCHITECT PAUL DHANENS NO. C-23843 RENEWAL STATE OF CALIFORNIA

5100 CALIFORNIA AVE. SUITE 107
BAKERSFIELD, CALIFORNIA 93308
TELEPHONE: (661) 326-8936
FACSIMILE: (661) 326-8937

CONSULTANT

COPYRIGHT

PAUL DHANENS ARCHITECT expressly reserves its copyright and other property rights in these documents which are not to be reproduced, changed or copied in any written, graphic or electronic form, nor assigned to any third party without the expressed written consent of PAUL DHANENS ARCHITECT.

NOTICE TO CONTRACTORS
Written dimensions on these drawings shall take precedence over scaled dimensions. Contractor shall verify and be responsible for confirming all dimensions and shall notify the architect immediately of any descripencies or field variations discovered.

PROJECT

TENANT IMPROVEMENT FOR

FAMOUS FOR Steak 'n Shake STEAKBURGERS

1966 WEST AVE L
LANCASTER, CA

DATE	ISSUED FOR
6-28-19	BUILDING DEPT SUBMITTAL

NO.	REVISIONS
1	
2	
3	
4	

CEILING PLAN

FILE NAME: 2366A2-0

SHEET

A-2.0

GENERAL NOTES:

1. XX|XX INDICATES TYPICAL FINISHES WITHIN ROOM U.O.N. SEE SHEET A-6.0 FOR MATERIAL AND COLOR SCHEDULE.
2. ALL FLOOR COVERING MATERIALS TO BE INSTALLED PER MANUFACTURER'S STANDARD DETAILS AND SPECIFICATIONS. VERIFY W/ MANUFACTURER PRIOR TO INSTALLATION.
3. THE G.C. IS RESPONSIBLE FOR PROVIDING A SMOOTH LEVEL FLOOR SURFACE THAT MEETS THE MANUFACTURERS INSTALLATION SPECIFICATIONS PRIOR TO THE INSTALLATION OF ALL FLOORING MATERIALS. USE LEVELING COMPOUND UNDER TILE AND CARPET AREAS PER SPECIFICATIONS. PATCH/SHIM ALL AREAS AS NECESSARY SO THAT NEW FLOORING MEETS LEVEL WITH ALL OTHER FLOORING SURFACES MAX SLOPE OF 1:20.
4. THE FLOORING SUB-CONTRACTOR IS RESPONSIBLE FOR VERIFYING THAT THE CONDITION OF THE BASE FLOOR MEETS THE INSTALLATION SPECIFICATIONS PRIOR TO THE INSTALLATION OF THE NEW FLOORING MATERIAL.
5. ALL MATERIAL TRANSITIONS AT DOOR THRESHOLDS TO TAKE PLACE AT DOOR CENTERLINE U.O.N.
6. ALL DIMENSIONS ARE TO CENTERLINE OF TRANSITION BETWEEN FLOORING MATERIALS OR FINISH COLOR OF SAME MATERIAL. PLANS DO NOT SHOW ALL TILES OF SAME MATERIALS. CONTRACTOR TO START TILES AT POINT AS INDICATED ON PLANS.

KEY NOTES:

1. START POINT FOR TILE; ALIGN WITH THE FACE OF POS COUNTER
2. STAINLESS STEEL WALL FINISH PROVIDED BY KITCHEN VENDOR TO EXTEND 18" BEYOND HOOD WIDTH, AS APPLICABLE. COORDINATE WITH HOODS
3. GRAPHIC INSTALLED ON P-2 PAINT ABOVE STOREFRONT.
4. GRAPHIC WRAPS AROUND TO CORNER.
5. RESTROOM DOORS AND FRAME TO BE PAINTED P-1, FRONT AND BACK.

FINISH LEGEND: X # - FINISH (REFER TO FINISH LEGEND ON SHEET A-6.0)

KEY	ITEM	DESCRIPTION	COLOR	REMARKS
B-1	BASE	4" ALUMINUM WALL BASE	WILSONART SATIN BRUSHED NATURAL ALUMINUM #6257 (4ft)	
B-2	BASE	ROPPE OR KYDEX, TRADITIONAL VINYL WALL BASE	#100 BLACK, 4" COVE (COIL)	
B-3	BASE	DAL TILE COVED WALL BASE	8"X8" 0703 ASHEN GRAY	
B-3	BASE	DAL TILE COVED WALL BASE	DB VOLUME LO 6X12 BASE P-36C4TB AMPLIFY BLACK STD	
FRP-1	FIBERGLASS REINFORCED PANELS	MARLITE WALL SYSTEMS, STANDARD FRP	5100 WHITE, PEBBLED SURFACE	KITCHEN
P-1	PAINT	BENJAMIN MOORE, AURA INTERIOR PAINT	2133-10 ONYX	WALLS: SATIN FINISH; CEILING: FLAT DOORS & TRIM: SEMIGLOSS
P-2	PAINT	BENJAMIN MOORE, AURA INTERIOR PAINT	2133-30 DAY'S END	CEILING ONLY: FLAT
P-3	PAINT	BENJAMIN MOORE, AURA INTERIOR PAINT	2001-10 RUBY RED	WALLS: SATIN FINISH; CEILING: FLAT DOORS & TRIM: SEMIGLOSS
P-4	PAINT	SHERWIN WILLIAMS, ACRYLIC LATEX EMERALD	SW 7004 SNOWBOUND	WALLS: SATIN FINISH; CEILING: FLAT DOORS & TRIM: SEMIGLOSS
PL-4	PLASTIC LAMINATE	WILSONART, HIGH PRESSURE LAMINATE	4878-60 PEWTER MESH	
PL-7	PLASTIC LAMINATE	WILSONART, HIGH PRESSURE LAMINATE	4623-60 GRAPHIC NEBULA	
SF-3	SPECIAL FINISH	KOROGARD, WALL PROTECTION SYSTEM	VAPOR	
SF-4	SPECIAL FINISH	KOROGARD, WALL PROTECTION SYSTEM	BLACK	
T-1	TILE	DAL TILE, PORCELAIN TILE	DB VOLUME LO 12X24 FLOOR VL70 AMPLIFY BLACK STD	GROUT TO BE ULTRAFLEX GRAY THIN SET AT DINING ROOM AND RESTROOM
T-2	TILE	DAL TILE, PORCELAIN TILE	DB COLUME LO 12X24 FLOOR VL71 DEGREES SILVER STD	GROUT TO BE ULTRAFLEX GRAY THIN SET AT DINING ROOM AND RESTROOM
T-3	TILE	DAL TILE, PORCELAIN TILE	8"X8" 0703 ASHEN GRAY	GROUT TO BE ULTRAFLEX GRAY THIN SET AT DINING ROOM AND RESTROOM
T-4	TILE	DAL TILE, PORCELAIN TILE	0910 ARCTIC WHITE SEMIGLOSS MODERN DIMENSION 4 1/2"X 12 7/8" TILE	KITCHEN WALLS BEHIND SERVICE COUNTER, USE DALTILE TRIM PIECES S4C4 MOD 0910 ARCTIC WHITE AND A34C1 4X12 C/B 0910 ARCTIC WHITE
T-5	TILE	DAL TILE, PORCELAIN TILE	K111 BLACK SEMIGLOSS MODERN DIMENSION 4 1/2"X 12 7/8" TILE	KITCHEN WALLS BEHIND SERVICE COUNTER, USE DALTILE TRIM PIECES S4C4 MOD K111 BLACK AND A34C1 4X12 C/B K111 BLACK
WC-1	WALLCOVERING	AGI	-	VINYL GRAPHIC, 54" WIDE, INSTALL DIRECTLY ONTO DRYWALL
WC-2	WALLCOVERING	AGI	-	VINYL GRAPHIC, GRAND ENTRANCE WASHABLE SURFACE - PRINTED

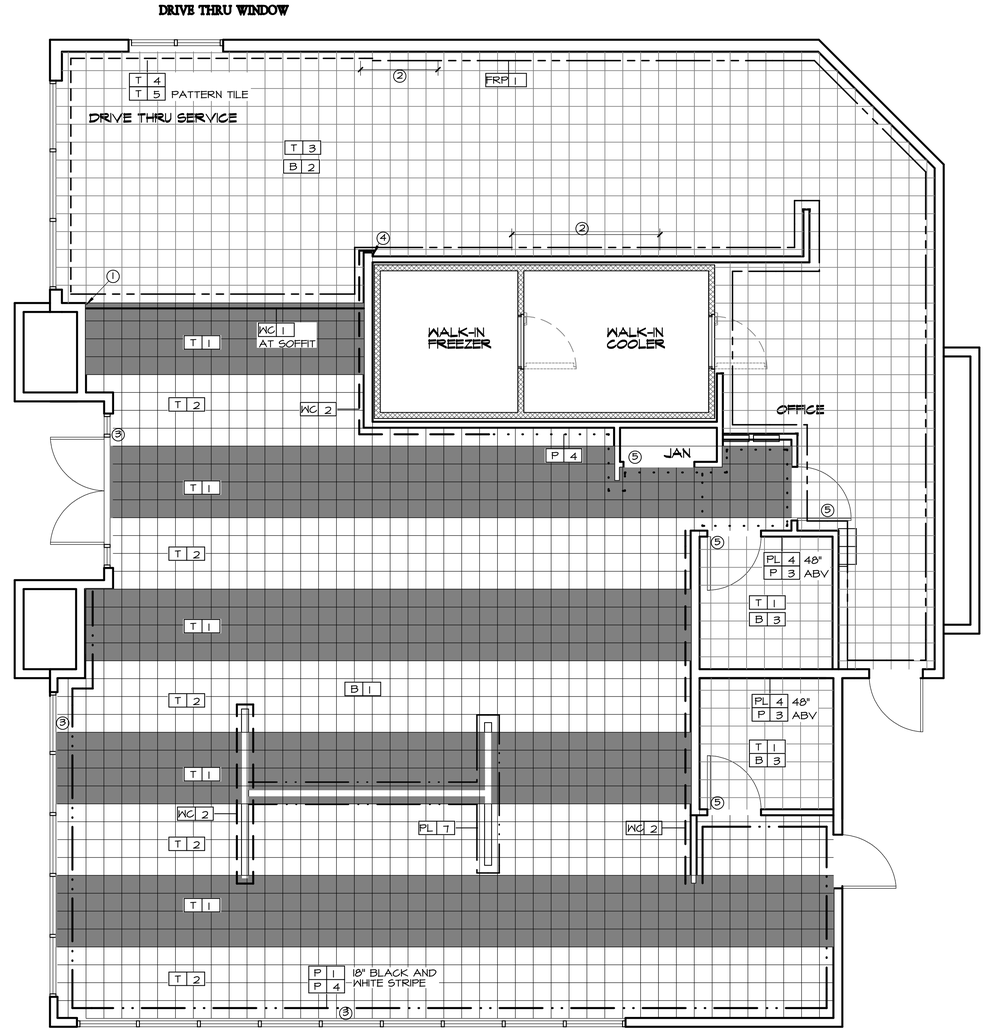

N

FINISH FLOOR PLAN

1/4"

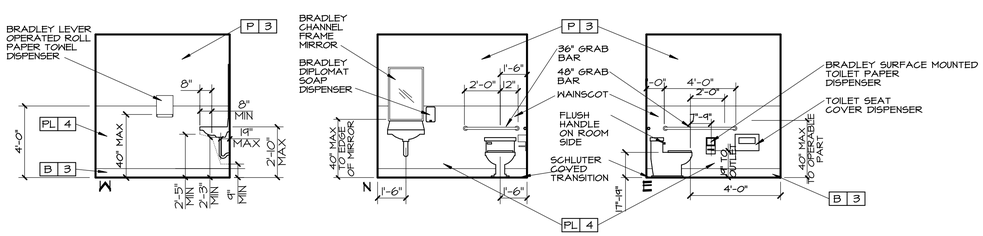

TYPICAL RESTROOM

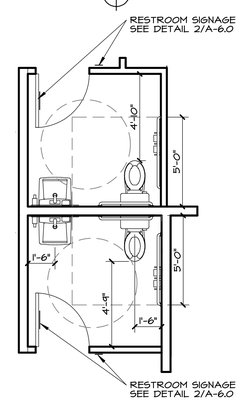

RESTROOM PLAN

INTERIOR ELEVATION NOTES

1. ALL COUNTER TOPS SHALL BE BRACED AS REQUIRED WITH DIAGONAL SUPPORTS. MATERIAL AND FINISH SHALL MATCH ADJACENT CABINETRY.
2. WRAP ALL SINK DRAINS WITH INSULATION AS REQUIRED.
3. AT LEAST ONE OF EACH TYPE OF ACCESSORY SHALL BE INSTALLED WITH ALL OPERABLE PARTS WITHIN +40" FROM THE FINISHED FLOOR.
4. ALL CABINETRY, FIXTURES AND ACCESSORIES SHALL BE CONSTRUCTED AND INSTALLED PER APPLICABLE CODES.
5. FORCE REQUIRED TO ACTIVATE ALL FIXTURES SHALL BE NO GREATER THAN 5 LBF.
6. FAUCET CONTROLS AND OPERATING MECHANISMS SHALL BE OPERABLE WITH ONE HAND AND SHALL NOT REQUIRE TIGHT GRASPING, PINCHING OR TWISTING OF THE WRIST. THE FORCE REQUIRED TO ACTIVATE CONTROLS SHALL NOT BE GREATER THAN 5 LB.
7. FAUCETS ON SELF-CLOSING FAUCET CONTROL VALVES, IF USED, SHALL REMAIN OPEN FOR AT LEAST 10 SECONDS
8. EACH ACCESSIBLE SINK SHALL BE A MAXIMUM OF 6 1/2" DEEP. SINKS SHALL BE MOUNTED WITH THE COUNTER OR RIM NO HIGHER THAN 34" ABOVE THE FINISHED FLOOR. KNEE CLEARANCE THAT IS AT 27" HIGH, 30" WIDE AND 19" DEEP UNDERNEATH SINKS. SEE ALSO MINIMUM KNEE CLEARANCE DIAGRAM THIS SHEET.
9. ALL FLOOR FINISHES TO BE NON-ABSORBENT MATERIAL SUCH AS CERAMIC TILE OR SHEET VINYL. BASE IS TO BE COVED
10. WAINSCOT TO BE 48" ON THE FACE OF THE WALL AND TO BE OF NON-ABSORBENT MATERIAL SUCH AS CERAMIC TILE OR SHEET VINYL

PAUL DHANENS • ARCHITECT

ARCHITECT

LICENSED ARCHITECT PAUL DHANENS NO. C-23843 RENEWAL STATE OF CALIFORNIA

5100 CALIFORNIA AVE. SUITE 107
BAKERSFIELD, CALIFORNIA 93309
TELEPHONE: (661) 326-8936
FACSIMILE: (661) 326-8937

CONSULTANT

COPYRIGHT

PAUL DHANENS ARCHITECT expressly reserves its copyright and other property rights in these documents which are not to be reproduced, changed or copied in any written, graphic or electronic form, nor delivered to any third party without the expressed written consent of PAUL DHANENS ARCHITECT.

NOTICE TO CONTRACTORS
Written dimensions on these drawings shall take precedence over scaled dimensions. Contractor shall verify and be responsible for confirming all dimensions and shall notify the architect immediately of any descripencies or field variations discovered.

PROJECT

TENANT IMPROVEMENT FOR

FAMOUS FOR Steak 'n Shake STEAKBURGERS

1966 WEST AVE L
LANCASTER, CA

DATE	ISSUED FOR
6-20-19	BUILDING DEPT SUBMITTAL

NO.	REVISIONS
1	
2	
3	
4	

FINISH PLAN

FILE NAME: 2366A3-0

SHEET

A-3.0

GENERAL NOTES:

1. G.C. TO COORDINATE WITH MILLWORKER FOR LOCATION OF BLOCKING AS REQUIRED.
2. GENERAL CONTRACTOR TO COORDINATE FINAL LOCATIONS OF FIXTURES AND/OR FURNITURE WITH OWNER BEFORE INSTALLATION, INCLUDING COORDINATING POWER, FIXTURE ANCHOR SLEEVES, AND/OR FIXTURES. SEE ELECTRICAL DRAWINGS FOR ADDITIONAL POWER/DATA INFORMATION.
3. G.C. TO COORDINATE AND VERIFY ALL FIXTURE AND/OR FURNITURE QUANTITIES AND INSTALLATION WITH FIXTURE FABRICATOR AND OWNER.
4. LOCATE FIXTURES AND FURNISHINGS AS TO MAINTAIN 36" CLEAR BETWEEN AND A 44" WIDE EGRESS PATH TO EXIT DOORS.
5. REFER TO GRAPHICS PACKAGE FOR PLACEMENT OF INTERIOR GRAPHICS

KEY NOTES:

1. KITCHEN LAYOUT, INCLUDING ALL EQUIPMENT AND FURNITURE SHOWN FOR REFERENCE ONLY. SEE KITCHEN AND MEP DRAWINGS FOR ADDITIONAL SPECIFICATIONS, POWER, DATA, PLUMBING, HVAC, DRAINS AND VENTILATION AS REQUIRED.
2. GRAPHIC FOCAL WALL. REFER TO GRAPHICS PACKAGE FOR ADDITIONAL INFORMATION AND BLOCKING REQUIREMENTS.
3. AUTOMATIC PAPER TOWEL ROLL DISPENSER
4. SAFE UNDER MANAGER'S DESK PROVIDED BY KITCHEN VENDOR. SEE KITCHEN SHEETS FOR MORE INFORMATION
5. FIRE EXTINGUISHER LOCATION. G.C. T.O VERIFY FINAL LOCATION WITH AUTHORITY HAVING JURISDICTION AFTER EQUIPMENT INSTALLATION
6. MANAGER'S DESK WITH SHELVES AND CABINET ABOVE BY KITCHEN VENDOR. SEE KITCHEN SHEETS FOR MORE INFORMATION.
7. COORDINATE POWER/DATA REQUIREMENTS WITH ELECTRICAL DRAWINGS AND FIXTURE FABRICATOR.
8. HIGH CHAIRS BY OWNER.
9. COUNTER HEIGHT GATE INCLUDED IN MILLWORK PACKAGE

SEATING CAPACITES

TYPES	PARTIES	SEATS	PERCENTAGE
INTERIOR			
2 TOPS	26	52	
4 TOP	1	4	
BAR TABLE	1	7	
COMMUNAL TABLE	1	10	
INTERIOR DINING TOTAL	29	73	100%

ACCESSIBILITY REQUIREMENTS:
73 SEATING
REQUIRED: 5% TOTAL SEATING (4 SEATS)
PROVIDED:4 ACCESSIBLE TABLES INTERIOR

MILLWORK SCHEDULE

ITEM	DESCRIPTION	QTY	NOTE
LF-1.0	COMMUNAL TABLE	1	
LF-2.0	BEVERAGE AND CONDIMENT STATION	1	
LF-3.0	TRASH BIN	1	
LF-4.0	BENCH	1	
LF-5.0	BAR TABLE	1	
LF-6.0	POS	1	
LF-6.1	POS	1	
LF-7.0	POS & PICK UP COUNTER	1	

FURNISHNGS SCHEDULE

ITEM	DESCRIPTION	QTY	NOTE
FN-1	LOW CHAIR	52	
FN-2	BARSTOOL	17	
FN-3	2 TOP TABLE	18	
FN-6	4 TOP ADA TABLE	4	

FURNISHNGS SCHEDULE

ITEM	DESCRIPTION	QTY	NOTE
FE-1	FIRE EXTINGUISHER (X2)	1	
FE-2	FIRE EXTINGUISHER (TYPE K)-(X3)	1	
FE-3	RECESSED FIRE EXTINGUISHER (X2)	1	

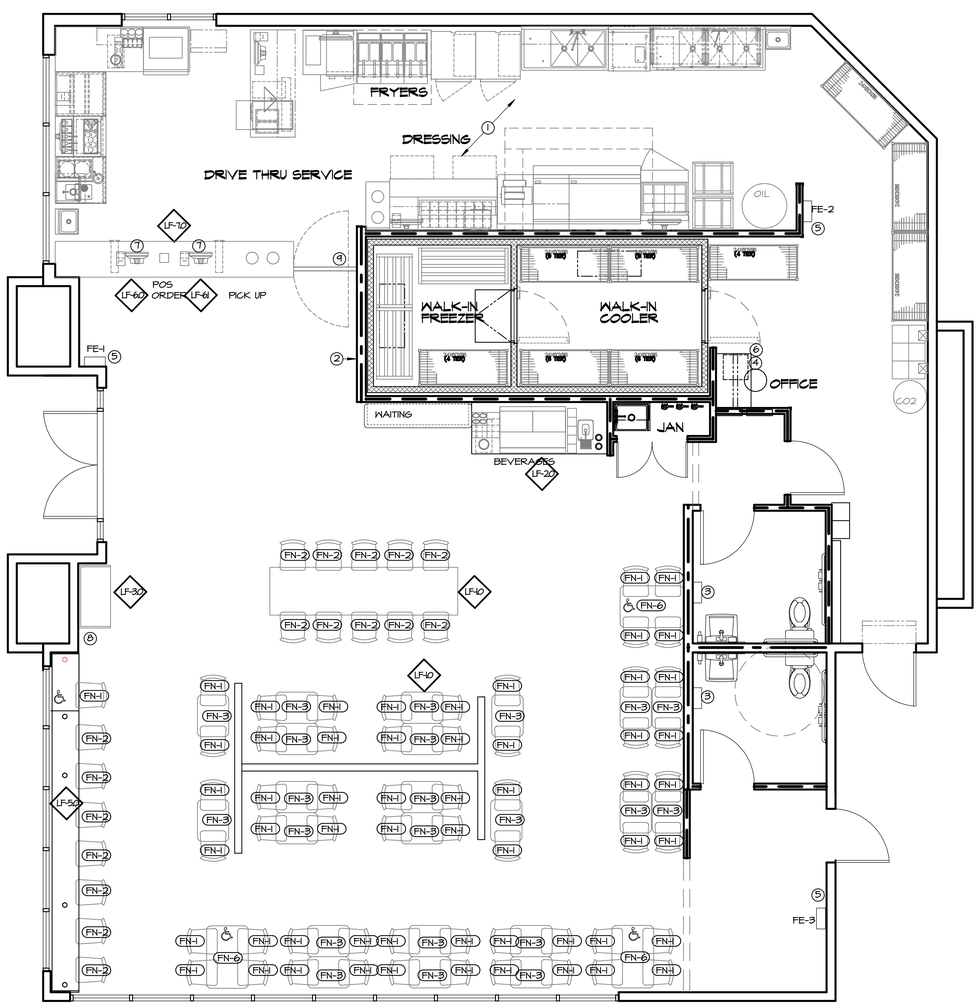

N

FURNISHING AND FIXTURE PLAN

1/4"

G.C. TO COORDINATE WITH KITCHEN VENDOR THE LEAD TIMES OF ALL KITCHEN EQUIPMENT BEFORE DEVELOPING A MASTER SCHEDULE

PAUL DHANENS • ARCHITECT

ARCHITECT

LICENSED ARCHITECT PAUL DHANENS NO. C-23843 RENEWAL STATE OF CALIFORNIA

5100 CALIFORNIA AVE. SUITE 107
BAKERSFIELD, CALIFORNIA 93309
TELEPHONE: (661) 326-8936
FACSIMILE: (661) 326-8937

CONSULTANT

COPYRIGHT

PAUL DHANENS ARCHITECT expressly reserves its copyright and other property rights in these documents which are not to be reproduced, changed or copied in any written, graphic or electronic form, nor assigned to any third party without the expressed written consent of PAUL DHANENS ARCHITECT.

NOTICE TO CONTRACTORS
Written dimensions on these drawings shall take precedence over scaled dimensions. Contractor shall verify and be responsible for confirming all dimensions and shall notify the architect immediately of any descripencies or field variations discovered.

PROJECT

TENANT IMPROVEMENT FOR

FAMOUS FOR Steak 'n Shake STEAKBURGERS

1966 WEST AVE L
LANCASTER, CA

DATE	ISSUED FOR
6-28-19	BUILDING DEPT SUBMITTAL

NO.	REVISIONS
1	
2	
3	
4	

FURNITURE PLAN

FILE NAME: 2366A4-0

SHEET

A-4.0

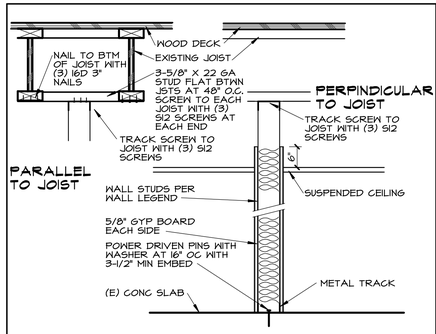

1 FULL HEIGHT WALL SECTION 3"

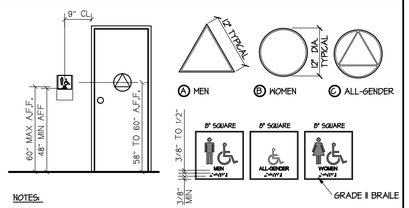

NOTES:

1. BACKGROUND MATERIAL: EGGSHELL OR MATTE FINISH, CONTRASTING WITH WALL COLOR SYMBOLS AND CHARACTERS: EGGSHELL OR MATTE FINISH, CONTRASTING WITH BACKGRUND COLOR
2. TEXT TYPE: SANS-SERIF UPPERCASE RAISED 1/32" MIN. ABOVE BACKGROUND SURFACE HEIGHT 5/8" MIN. 2" MAX. 6" FOR BUILDING IDENTIFICATION. LETTER PROPORTIONS: WIDTH-TO-HEIGHT RATIO BETWEEN 3/5 AND 1/1, AND STROKE WIDTH TO HEIGHT RATIO BETWEEN 1/5 AND 1/10.
3. CALIFORNIA GRADE II BRAILLE ROUNDED OR DOWED PER CODE SECTION 11B-703.3

2 TACTILE RESTROOM SIGN NS

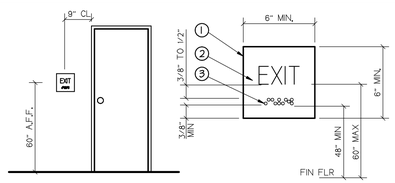

NOTES:

1. BACKGROUND MATERIAL: EGGSHELL OR MATTE FINISH, CONTRASTING WITH WALL COLOR SYMBOLS AND CHARACTERS: EGGSHELL OR MATTE FINISH, CONTRASTING WITH BACKGRUND COLOR
2. TEXT TYPE: SANS-SERIF UPPERCASE RAISED 1/32" MIN. ABOVE BACKGROUND SURFACE HEIGHT 5/8" MIN. 2" MAX. 6" FOR BUILDING IDENTIFICATION. LETTER PROPORTIONS: WIDTH-TO-HEIGHT RATIO BETWEEN 3/5 AND 1/1, AND STROKE WIDTH TO HEIGHT RATIO BETWEEN 1/5 AND 1/10.
3. CALIFORNIA GRADE II BRAILLE ROUNDED OR DOWED PER CODE SECTION 11B-703.3.

3 TACTILE EXIT SIGN NS

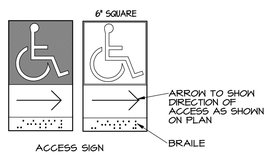

GENERAL SIGNAGE NOTES
- SIGNS TO BE OF CONTRASTING COLOR TO DOOR FINISH.
- SIGN TO HAVE WHITE FIGURE ON BLUE BACKGROUND (BLUE # 15090, FED. STD. 595a)
- PROVIDE DIRECTIONAL ARROW WHERE SPECIFIED.
- ALL SIGNS TO BE 1/4" THICK.

4 TACTILE DIRECTIONAL SIGN

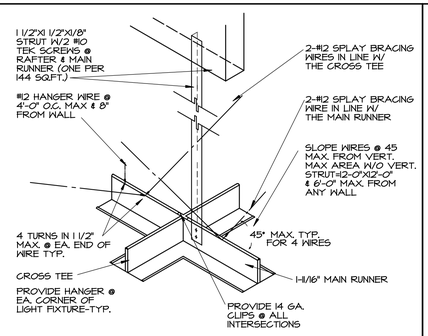

5 SEISMIC BRACING NS

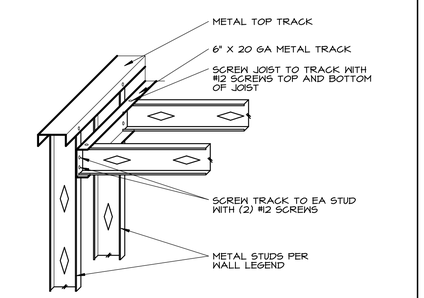

7 CEILING FRAMING N.S.

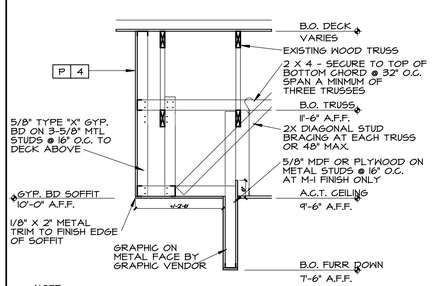

NOTE:
TRUSSES IN DINING ROOM ARE TO BE EXPOSED AND PAINTED. G.C. TO REMOVE ANY NAILS THAT PROTRUDE THROUGH THE DECKING THAT MISSED THEIR MARK AND ARE NOT FUNCTIONAL.

8 SOFFIT DETAIL @ CEILING FIXTURE 1"

NOTE:
TRUSSES IN DINING ROOM ARE TO BE EXPOSED AND PAINTED. G.C. TO REMOVE ANY NAILS THAT PROTRUDE THROUGH THE DECKING THAT MISSED THEIR MARK AND ARE NOT FUNCTIONAL.

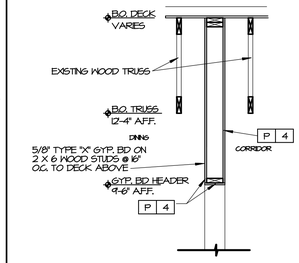

9 HEADER DETAIL 1"

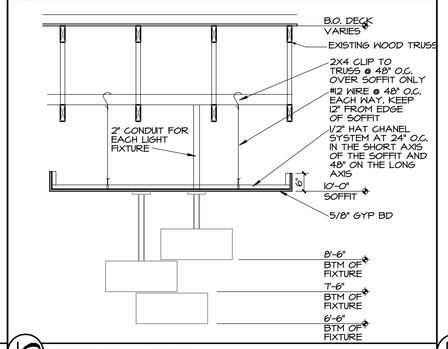

10 HANGING SOFFIT 1"

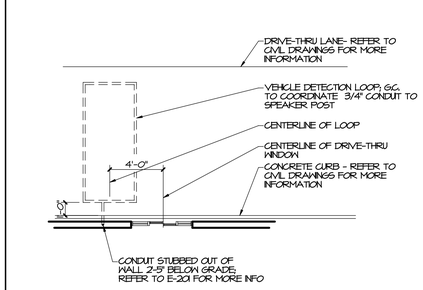

NOTE
INSTALL LOOP 2'-5" BELOW TOP OF PAVEMENT

11 DRIVE THRU TIMER LOOP N.S.

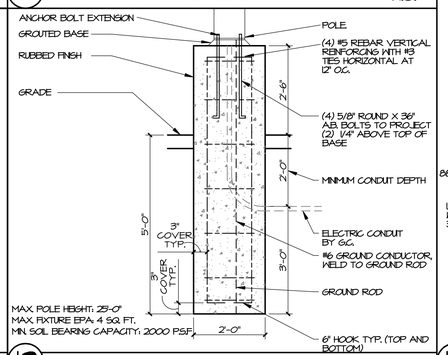

12 SOFFIT DETAIL @ CEILING FIXTURE 1"

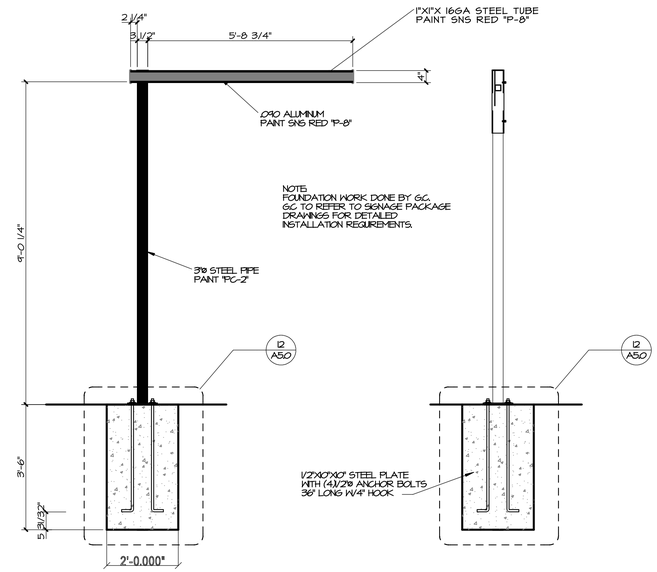

14 CLEARANCE BAR 1"

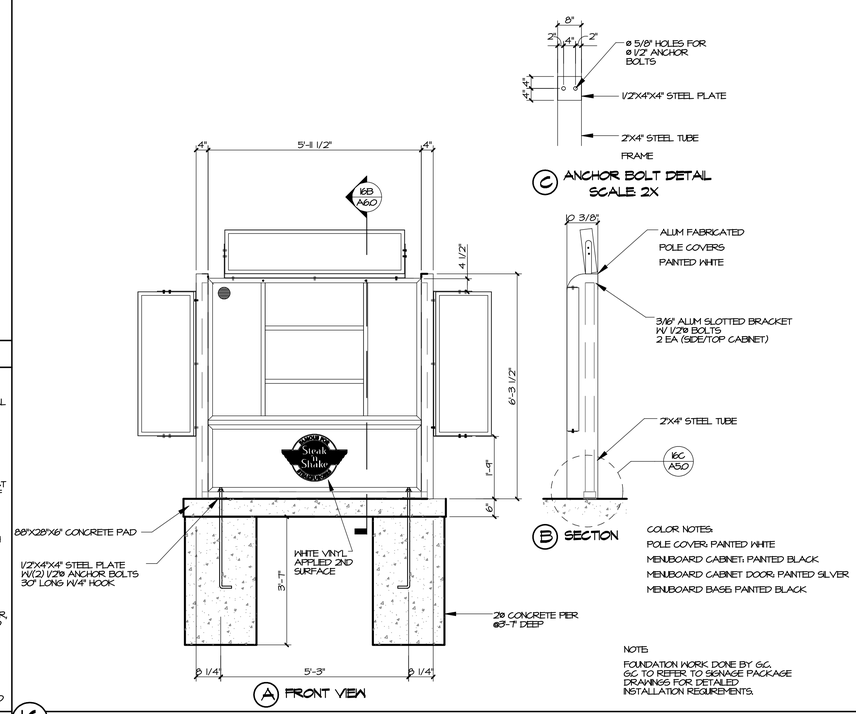

16 MENU BOARD 1"

PAUL DHANENS • ARCHITECT

ARCHITECT

LICENSED ARCHITECT PAUL DHANENS NO. C-23843 RENEWAL STATE OF CALIFORNIA

5100 CALIFORNIA AVE. SUITE 107
BAKERSFIELD, CALIFORNIA 93309
TELEPHONE: (661) 326-8936
FACSIMILE: (661) 326-8937

CONSULTANT

COPYRIGHT

PAUL DHANENS ARCHITECT expressly reserves its copyright and other property rights in these documents which are not to be reproduced, changed or copied in any written, graphic or electronic form, nor delivered to any third party without the expressed written consent of PAUL DHANENS ARCHITECT.

NOTICE TO CONTRACTORS
Written dimensions on these drawings shall take precedence over scaled dimensions. Contractor shall verify and be responsible for confirming all dimensions and shall notify the architect immediately of any descripencies or field variations discovered.

PROJECT

TENANT IMPROVEMENT FOR

FAMOUS FOR Steak 'n Shake STEAKBURGERS

1966 WEST AVE L
LANCASTER, CA

DATE	ISSUED FOR
6-28-19	BUILDING DEPT SUBMITTAL

NO.	REVISIONS
1	
2	
3	
4	

DETAILS

FILE NAME: 2366A5-0

SHEET

A-5.0

SPECIAL CONDITIONS

1. TENANT GENERAL CONTRACTOR (G.C.) SHALL VISIT THE JOB SITE PRIOR TO SUBMITTING BID. THE BID SHALL BE BASED UPON THE WORK INDICATED IN THE CONSTRUCTION DOCUMENTS AND UPON THE CONTRACTOR'S KNOWLEDGE OF AND FAMILIARITY WITH OWNER'S PROJECT DESIGN REQUIREMENTS AND PROJECT SITE EXISTING CONDITIONS. ANY DISCREPANCIES BETWEEN INFORMATION INDICATED IN THESE DRAWINGS AND CONTRACTOR'S UNDERSTANDING OF THE OWNER'S REQUIREMENTS SHALL BE BROUGHT TO THE ATTENTION OF THE OWNER AND THE ARCHITECT FOR RESOLUTION, OR G.C. SHALL BE RESPONSIBLE FOR ANY ADDITIONAL COST INCURRED.

2. DISCREPANCIES OR UNFORESEEN CIRCUMSTANCES FOUND DURING CONSTRUCTION ARE TO BE IMMEDIATELY BROUGHT TO THE ATTENTION OF THE OWNER AND ARCHITECT IN WRITING. G.C. IS RESPONSIBLE FOR ALL PROBLEMS NOT ACCURATELY REFLECTED. DISCREPANCIES DURING CONSTRUCTION WILL BE HANDLED BY CHANGE ORDERS. G.C. TO SUBMIT TO THE ARCHITECT SKETCHES WITH NOTES AND DIMENSIONS OR NOTATED COPIES OF THE CONSTRUCTION DRAWING IN PART OR IN WHOLE TO ASSIST IN CLARIFYING ISSUES TO BE RESOLVED.

3. G.C. WILL BE RESPONSIBLE FOR ALL COSTS INCURRED FOR NONCOMPLIANCE WITH THESE CONTRACT DOCUMENTS. G.C. WILL NOT BE ALLOWED CHANGE ORDERS FOR PROBLEMS ARISING FROM G.C.'S NEGLECT OF THE PROVISIONS INCLUDED IN THESE CONDITIONS.

4. G.C. SHALL ACCOMPLISH ALL WORK IN ACCORDANCE WITH LOCAL CODES AND ORDINANCES, AUTHORITIES HAVING JURISDICTION.

5. G.C. SHALL REMOVE ALL CONSTRUCTION RUBBISH, SCAFFOLDING, EQUIPMENT, TEMPORARY PROTECTION, TEMPORARY FIELD STRUCTURES, AND ANYTHING ELSE THAT WAS REQUIRED IN CONNECTION WITH THE CONSTRUCTION, BUT NOT A PERMANENT PART THEREOF.

6. G.C. SHALL MAINTAIN ORDERLY HOUSEKEEPING DURING THE PROCESS OF CONSTRUCTION, AND UPON COMPLETION SHALL THOROUGHLY CLEAN ALL AREAS. FINAL CLEANUP SHALL INCLUDE THE FOLLOWING: SWEEP, DAMP MOP, AND WAX RESILIENT FLOORING (SEE SPEC.); DUST, DIRT, PAINT DRIPPINGS, OIL, GREASE, AND OTHER BLEMISHES SHALL BE CLEANED. REMOVED FROM ALL SURFACES, INCLUDING PIPING AND EQUIPMENT; WINDOWS, GLASS UNITS, GLASS DOORS AND MIRRORS SHALL BE PAINT OVERRUNS AND PUTTY SMEARS SHALL BE REMOVED; HARDWARE SHALL BE RUBBED CLEAN WITH A FLANNEL CLOTH AS APPLICABLE AND SHALL BE PERFORMED PER MANUFACTURER'S RECOMMENDATIONS.

7. MANUFACTURES ON SPECIFIED ITEMS ARE NOTED FOR QUALITY AND DESIGN. G.C. MAY SUBSTITUTE "EQUAL" PRODUCTS SUBJECT TO APPROVAL BY THE OWNER AND ARCHITECT IN WRITING UNLESS NOTED AS "NO SUBSTITUTIONS ALLOWED". G.C. IS ENCOURAGED TO SUBMIT ALTERNATIVE "EQUAL" PRODUCTS FOR CONSIDERATION OF THE ARCHITECT IN AN EFFORT TO REDUCE THE CONSTRUCTION COSTS. ALL REASONABLE REQUESTS WILL BE REVIEWED BY THE ARCHITECT FOR COMPLIANCE WITH THE INTENT OF THE PRODUCTS ORIGINALLY SPECIFIED.

8. ALL PRODUCT AND MATERIALS SHALL BE INSTALLED IN STRICT CONFORMANCE WITH THE MANUFACTURER'S PUBLISHED RECOMMENDATIONS. G.C. SHALL PROVIDE A COPY OF MANUFACTURER'S INSTALLATION RECOMMENDATIONS TO THE OWNER

9. APPLICABLE STANDARDS OF THE CONSTRUCTION INDUSTRY HAVE SOME FORCE AND EFFECT ON PERFORMANCE OF THE WORK AS IF COPIED DIRECTLY INTO CONTRACT DOCUMENTS OR BOUND AND PUBLISHED THEREWITH. COMPLY WITH STANDARDS IN EFFECT AS OF THE DATE OF CONTRACT DOCUMENTS, UNLESS OTHERWISE INDICATED.

10. ALL SCAFFOLDING SHALL BE BUILT IN ACCORDANCE WITH REQUIREMENTS OF ALL FEDERAL, STATE, AND LOCAL LAWS. ALL TEMPORARY SHORING REQUIRED FOR THE REMOVAL OF EXISTING WORK FOR THE INSTALLATION OF NEW WORK SHALL BE INCLUDED IN THE CONTRACT. CONTRACTOR SHALL BE RESPONSIBLE FOR THIS WORK AND SHALL MAKE GOOD ANY DAMAGE CAUSED BY IMPROPER SUPPORT OR FAILURE OF SHORING IN ANY RESPECT.

11. G.C. SHALL PROVIDE AND MAINTAIN FULL INSURANCE AS REQUIRED BY THE GENERAL CONDITIONS. EVIDENCE OF INSURANCE SHALL BE PROVIDED TO THE OWNER BEFORE PAYMENTS SHALL COMMENCE TO THE CONTRACTOR.

12. UPON COMPLETION OF THE WORK, G.C. SHALL COMPILE AND DELIVER TO THE OWNER A COMPLETE SET OF RECORD DOCUMENTS. THIS SET OF DOCUMENTS SHALL CONSIST OF RECORD SPECIFICATIONS AND RECORD DRAWINGS SHOWING THE REPORTED LOCATION OF THE WORK, INCLUDING, BUT NOT LIMITED TO NAME, ADDRESS & PHONE NO'S OF ALL CONTRACTORS AND ALL BALANCE REPORTS, C.O.

13. DURING PERFORMANCE OF WORK, G.C. IS RESPONSIBLE FOR PROVISION AND MAINTENANCE OF WARNING SIGNS, LIGHT SIGNAL DEVICES, GUARD LIGHTS, BARRICADES, GUARD RAILS, FENCES AND OTHER DEVICES AS APPROPRIATELY LOCATED ON AND AROUND THE JOB SITE WHICH WILL GIVE PROPER AND UNDERSTANDABLE WARNING TO ALL PERSONS WITH REGARD TO HAZARDOUS CONDITIONS, EQUIPMENT AND OPERATION BEING PERFORMED IN CONJUNCTION WITH THE G.C.'S WORK. ALL WARNING DEVICES SHALL COMPLY WITH O.S.H.A. AND OTHER APPLICABLE GOVERNMENTAL REGULATIONS AS REQUIRED FOR THE CONSTRUCTION PROCEDURES AND CONDITIONS ENCOUNTERED.

14. IN SO FAR AS JOB SITE SAFETY IS CONCERNED, THE ARCHITECT IS RESPONSIBLE SOLELY FOR HIS OWN AND HIS EMPLOYEES' ACTIVITIES ON THE JOB SITE, BUT THIS SHALL NOT BE CONSTRUED TO RELIEVE THE OWNER OR ANY CONSTRUCTION CONTRACTORS FROM THEIR RESPONSIBILITIES FOR MAINTAINING A SAFE JOB SITE. NEITHER THE PROFESSIONAL ACTIVITIES OF THE ARCHITECT, NOR THE PRESENCE OF THE ARCHITECT OR HIS EMPLOYEES AND SUBCONTRACTORS, SHALL BE CONSTRUED TO IMPLY THE ARCHITECT HAS ANY RESPONSIBILITY FOR METHODS OF WORK PERFORMANCE, SUPERINTENDENT, SEQUENCING OF CONSTRUCTION, OR SAFETY IN, ON, OR ABOUT THE JOB SITE. THE OWNER AGREES THAT THE G.C. IS SOLELY RESPONSIBLE FOR JOB SITE SAFETY AND WARRANTS THAT THE ARCHITECT SHALL BE MADE AN ADDITIONAL INSURED UNDER THE G.C.'S GENERAL LIABILITY INSURANCE POLICY.

15. THE OWNER'S REPRESENTATIVE SHALL REVIEW SHOP DRAWINGS SUBMISSIONS SOLELY FOR THEIR CONFORMANCE WITH THE ARCHITECT'S DESIGN INTENT AND CONFORMANCE WITH INFORMATION GIVEN IN THE CONSTRUCTION DOCUMENTS. THE OWNER'S REPRESENTATIVE SHALL NOT BE RESPONSIBLE FOR ANY ASPECTS OF A SHOP DRAWING SUBMISSION THAT AFFECT OR ARE AFFECTED BY THE MEANS, METHODS, TECHNIQUES, SEQUENCES AND OPERATIONS OF THE CONSTRUCTION, SAFETY PRECAUTIONS AND PROGRAMS INCIDENTAL THERETO, ALL OF WHICH ARE THE CONTRACTOR'S RESPONSIBILITY. THE OWNER WARRANTS THAT THE CONTRACTOR SHALL BE MADE AWARE OF HIS RESPONSIBILITIES TO RE- VIEW SHOP DRAWINGS IN THESE RESPECTS BEFORE SUBMITTING THEM TO THE OWNER'S REPRESENTATIVE.

SECTION 01010 - SUMMARY OF WORK

A. EXISTING UTILITIES:

UTILITIES OF RECORD ARE SHOWN ON THE DRAWINGS INSOFAR AS IS FEASIBLE TO DO SO. HOWEVER, THEY ARE SHOWN FOR CONVENIENCE ONLY AND THE OWNER ASSUMES NO RESPONSIBILITY FOR IMPROPER LOCATIONS OR FAILURE TO SHOW UTILITY LOCATIONS ON THE DRAWINGS.

SECTION 01030 - SPECIAL PROJECT PROCEDURES

A. ADMINISTRATION OF CONTRACT

THE OWNER'S "CONSTRUCTION MANAGER" WILL ACT AS OWNER'S REPERSENTATIVE FOR PURPOSES OF ADMINISTRATION OF THE CONTRACT.

B. OWNER-FURNISHED ITEMS:

18. MANY ITEMS INDICATED ARE FURNISHED BY OWNER, INSTALLED BY CONTRACTOR (FOIC), OR FURNISHED BY OWNER AND INSTALLED BY OWNER (FOIO). SEE RESPONSIBILITY SCHEDULE FOR A COMPLETE LIST.

19. CONTACT OWNER'S CONSTRUCTION MANAGER FOR ADDITIONAL INFORMATION AND TO COORDINATE RESOLUTION OF ANY PROBLEMS CONCERNING FOIC ITEMS

C. BUILDING CODES AND STANDARDS:

1. ALL WORK TO CONFORM TO ALL APPLICABLE LOCAL, STATE, AND NATIONAL CODES AND ORDINANCES.

2. CONFORM TO LANDLORD REQUIREMENTS, AS STATED IN THEIR TENANT CRITERIA, REGARDING TYPE, LOCATION, AND LOADING OF ALL ITEMS UNDER THIS CONTRACT THAT ARE ATTACHED TO MALL STRUCTURE.

3. OBTAIN AND ACKNOWLEDGE RECEIPT OF THE TENANT CRITERIA AND BECOME FAMILIAR WITH ALL CONSTRUCTION RULES AND PROCEDURES AS SET FORTH BY THE LANDLORD AND AUTHORITIES HAVING JURISDICTION PRIOR TO COMMENCING WORK.

D. INSURANCE

PURCHASE AND MAINTAIN, PER ARTICLE 11 OF AIA GENERAL CONDITIONS, THE FOLLOWING INSURANCE:

1. WORKER'S COMPENSATION AND EMPLOYER'S LIABILITY INSURANCE AS REQUIRED BY ANY EMPLOYEE BENEFIT ACT OR THE STATUTES APPLICABLE WHERE THE WORK IS TO BE PERFORMED, AS WILL PROTECT CONTRACTOR FROM ANY AND ALL LIABILITY UNDER THE AFOREMENTIONED ACTS, BUT NOT LESS THAN $2,000,000.

2. COMPREHENSIVE GENERAL LIABILITY INSURANCE (INCLUDING OWNER AND CONTRACTOR FOR FUTURE LIABILITY INSURANCE) WITH THE FOLLOWING LIMITS OF LIABILITY:

BODILY INJURY LIABILITY, EACH OCCURRENCE - $2,000,000
BODILY INJURY LIABILITY, AGGREGATE - $2,000,000
PROPERTY DAMAGE LIABILITY, EACH OCCURRENCE - $500,000
PROPERTY DAMAGE LIABILITY, AGGREGATE - $500,000
PERSONAL INJURY LIABILITY, AGGREGATE - $2,000,000

SUCH INSURANCE SHALL PROVIDE FOR EXPLOSION AND COLLAPSE COVERAGE AND CONTRACTUAL LIABILITY COVERAGE, AND SHALL INSURE CONTRACTOR AGAINST ANY AND ALL CLAIMS FOR PERSONAL INJURY, INCLUDING DEATH RESULTING THEREFROM AND DAMAGE TO PROPERTY OF OTHERS, ARISING FROM ITS OPERATIONS UNDER THE CONTRACT, WHETHER SUCH OPERATIONS ARE PERFORMED BY CONTRACTOR OR BY ANYONE DIRECTLY OR INDIRECTLY EMPLOYED BY THE CONTRACTOR.

3. COMPREHENSIVE AUTOMOBILE LIABILITY INSURANCE INCLUDING THE OWNERSHIP, MAINTENANCE AND OPERATION OF ANY AUTOMOTIVE EQUIPMENT OWNED, HIRED, AND NOT OWNED IN THE FOLLOWING MINIMUM AMOUNTS:

BODILY INJURY LIABILITY, EACH PERSON - $500,000
BODILY INJURY LIABILITY, AGGREGATE - $1,000,000
PROPERTY DAMAGE LIABILITY, EACH OCCURRENCE - $500,000

SUCH INSURANCE SHALL INSURE CONTRACTOR AGAINST ANY AND ALL CLAIMS FOR BODILY INJURY, INCLUDING DEATH RESULTING THEREFROM AND DAMAGE TO THE PROPERTY OF OTHERS ARISING FROM ITS OPERATIONS UNDER ITS CONTRACT WITH OWNER, WHETHER SUCH OPERATIONS ARE PERFORMED BY CONTRACTOR OR BY ANYONE DIRECTLY OR INDIRECTLY EMPLOYED BY THE CONTRACTOR.

4. BUILDERS' RISK COMPLETED VALUE FORM AFFORDING "ALL RISKS OF PHYSICAL LOSS OR DAMAGE" ON ITS WORK IN THE PREMISES AS IT RELATES TO THE BUILDING IN WHICH THE PREMISES ARE LOCATED, NAMING THE INTERESTS OF GENERAL CONTRACTOR AND ALL SUBCONTRACTORS AS THEIR RESPECTIVE INTERESTS MAY APPEAR, WITHIN A RADIUS OF 100 FEET OF THE PREMISES. AMOUNT OF INSURANCE SHALL EQUAL ONE HUNDRED PERCENT (100%) OF THE REPLACEMENT COST.

5. GENERAL CONTRACTOR TO PROVIDE OWNER WITH "CERTIFICATE OF INSURANCE" PRIOR TO START OF CONSTRUCTION.

6. ALL SUCH INSURANCE POLICIES REQUIRED SHALL INCLUDE OWNER, ITS ARCHITECT, ITS GENERAL CONTRACTOR, SUBCONTRACTORS, AND LANDLORD AS ADDITIONAL INSURED; EXCEPT WORKER'S COMPENSATION INSURANCE, WHICH SHALL CONTAIN AN ENDORSEMENT WAIVING ALL RIGHTS OF SUBROGATION AGAINST THE LANDLORD, ITS ARCHITECT, ITS GENERAL CONTRACTOR, AND SUBCONTRACTORS. (CERTIFICATES SHALL NOT BE CANCELED OR ALLOWED TO EXPIRE WITHOUT AT LEAST THIRTY (30) DAYS PRIOR WRITTEN NOTICE TO LANDLORD, ARCHITECT AND OWNER.)

SECTION - 01312 PROJECT MEETINGS

A. PRECONSTRUCTION CONFERENCE

6. PRIOR TO COMMENCING CONSTRUCTION, ADMINISTER A PRECONSTRUCTION CONFERENCE TO DISCUSS THE METHODS PROPOSED TO PERFORM THE WORK WITH THE OWNER AND THE OWNER / REPRESENTATIVE.

7. ADDRESS SCHEDULING, UTILITY SHUTDOWN TIMES, DEMOLITION PROCEDURES, SHORING METHODS, PROTECTIVE ENCLOSURES, BARRICADING, CONSTRUCTION SEQUENCING, WORK TIMES, PUBLIC ACCESS, SECURITY, AND ALL OTHER CONSTRUCTION ISSUES WHICH WOULD AFFECT THE OPERATION, USE, AND APPEARANCE OF THE BUILDING.

B. PROGRESS MEETINGS:ATTEND PROGRESS MEETINGS CALLED BY THE OWNER/REPRESENTATIVE THROUGHOUT THE PROGRESS OF THE WORK.

C. CONVENE A PRE-INSTALLATION MEETING WHEN IT IS SPECIFIED FOR A CERTAIN PORTION OF THE WORK. REQUIRE ATTENDANCE OF ENTITIES DIRECTLY AFFECTING, OR AFFECTED BY, THE WORK OF THE SECTION.

SECTION - 01330 SUBMITTAL PROCEDURES

A. SUBMITTAL PROCEDURE

1. IDENTIFY DEVIATIONS FROM CONTRACT DOCUMENTS. LEAVE SPACE FOR CONTRACTOR AND OWNER / REPRESENTATIVE REVIEW STAMPS.

2. REVIEW AND SIGN EACH SUBMITTAL PRIOR TO SUBMITTAL TO THE OWNER / REPRESENTATIVE. UNSIGNED SUBMITTALS WILL BE RETURNED UNREVIEWED.

3. UNLESS SPECIFIED OTHERWISE, SUBMIT THE NUMBER OF SUBMITTALS THE CONTRACTOR REQUIRES, PLUS TWO THAT WILL BE RETAINED BY THE OWNER / REPRESENTATIVE AND THE OWNER.

4. TRANSMIT EACH ITEM TO THE OWNER / REPRESENTATIVE UNDER AIA FORM G810, UNLESS APPROVED OTHERWISE. INCLUDE PROJECT NAME, CONTRACTOR NAME, SUBCONTRACTOR OR SUPPLIER NAME, AND DRAWING SHEET, DETAIL NUMBER, OR SPECIFICATION SECTION NUMBER CORRESPONDING TO THE SUBMITTAL AS APPROPRIATE.

5. TRANSMIT IDENTICAL COPY, IN SAME QUANTITY, TO OWNER'S CONSTRUCTION MANAGER SIMULTANEOUSLY.

6. MAKE SUBMITTALS AS REQUIRED TO CAUSE NO DELAY IN THE WORK. ALLOW SUFFICIENT TIME FOR POSSIBLE REVISION AND RESUBMITTAL OF REJECTED SUBMITTALS. COORDINATE SUBMITTAL OF RELATED ITEMS. REVISE AND RESUBMIT REJECTED SUBMITTALS AS REQUIRED TO OBTAIN APPROVAL, IDENTIFYING CHANGES MADE SINCE PREVIOUS SUBMITTAL.

B. SHOP DRAWINGS, DESIGN-BUILD DRAWINGS, PRODUCT DATA AND SAMPLES:

1. NUMBER OF COPIES: UNLESS OTHERWISE SPECIFIED, SUBMIT TO THE OWNER / REPRESENTATIVE ONE LEGIBLE RIGHT-READING REPRODUCIBLE AND ONE COPY FOR REVIEW, EXCEPT THAT SHOP DRAWINGS 11"X17" OR SMALLER MAY BE SUBMITTED IN THE FORM OF TWO BLACKLINE OR ELECTROSTATIC BOND COPIES.

2. UNLESS SPECIFIED OTHERWISE, DRAWINGS SHALL SHOW QUANTITIES, MATERIALS, METHODS OF ASSEMBLY, ADJACENT CONSTRUCTION, DIMENSIONS, AND ALL OTHER APPROPRIATE INFORMATION TO FULLY ILLUSTRATE THE WORK.

3. MARK EACH COPY TO IDENTIFY APPLICABLE PRODUCTS, MODELS, OPTIONS AND OTHER DATA; SUPPLEMENT MANUFACTURES STANDARD DATA TO PROVIDE INFORMATION UNIQUE TO THE WORK.

4. SUBMIT THE NUMER OF COPIES THAT THE OWNER/ REPRESENTATIVE REQUIRES

5. SUBMIT SAMPLES AS SPECIFIED IN THE TECHNICAL SECTIONS.

6. INCLUDE IDENTIFICATION ON EACH SAMPLE GIVING FULL INFORMATION.

7. SUBMIT THREE SAMPLES, ONE OF WHICH WILL BE RETAINED BY THE OWNER / REPRESENTATIVE, UNLESS INDICATED OTHERWISE IN THE TECHNICAL SECTION.

C. CERTIFICATES: SUBMIT THE ORIGINAL SIGNED VERSION TO THE OWNER / REPRESENTATIVE.

SECTION - 01450 - QUALITY CONTROL

A. STANDARDS: COMPLY WITH INDUSTRY STANDARDS EXCEPT WHEN MORE RESTRICTIVE TOLERANCES OR SPECIFIED REQUIREMENTS INDICATE MORE RIGID STANDARDS OR MORE PRECISE WORKMANSHIP.

B. PERFORM ALL WORK TO MEET OR EXCEED THE REQUIREMENTS OF ALL APPLICABLE CODES, ORDINANCES, LAWS, REGULATIONS, SAFETY ORDERS, AND DIRECTIVES FROM AUTHORITIES HAVING JURISDICTION OVER THE WORK.

C. PERFORM WORK WITH PERSONS QUALIFIED TO PRODUCE WORKMANSHIP OF SPECIFIED QUALITY.

D. INSTALL PRODUCTS IN ACCORDANCE WITH THE MANUFACTURER / RECOMMENDATIONS. WHERE CONFLICT BETWEEN MANUFACTURER / RECOMMENDATIONS AND THE SPECIFIED REQUIREMENTS IS DISCOVERED, NOTIFY THE OWNER / REPRESENTATIVE IMMEDIATELY.

E. EXAMINATION PRIOR TO INSTALLATION:

1. PRIOR TO STARTING WORK, CAREFULLY INSPECT INSTALLED WORK OF OTHER TRADES AND VERIFY THAT SUCH WORK IS COMPLETE TO THE POINT WHERE WORK OF THIS SECTION MAY PROPERLY COMMENCE. NOTIFY THE OWNER / REPRESENTATIVE IN WRITING OF CONDITIONS DETRIMENTAL TO THE PROPER AND TIMELY COMPLETION OF THE WORK.

2. DO NOT BEGIN INSTALLATION UNTIL ALL UNSATISFACTORY CONDITIONS ARE RESOLVED. BEGINNING WORK CONSTITUTES ACCEPTANCE OF SITE CONDITIONS AND RESPONSIBILITY FOR DEFECTIVE INSTALLATION CAUSED BY PRIOR OBSERVABLE CONDITIONS.

SECTION - 01500 - TEMPORARY FACILITIES AND CONTROLS

A. TEMPORARY UTILITIES:

1. PROVIDE TEMPORARY UTILITIES, SERVICES, AND CONSTRUCTION AS REQUIRED TO PERFORM THE WORK. COORDINATE ALL TEMPORARY FACILITIES AND CONTROLS WITH THE OWNER.

2. ELECTRICITY: CONNECT TO EXISTING SERVICE. OWNER WILL PAY COSTS OF ENERGY USED. TAKE MEASURES TO CONSERVE ENERGY

3. LIGHTING: PERMANENT LIGHTING MAY BE USED DURING CONSTRUCTION. PROVIDE ADDITIONAL TEMPORARY LIGHTING AS REQUIRED. MAINTAIN LIGHTING AND MAKE ROUTINE REPAIRS.

4. HEATING & VENTILATION: PERMANENT SYSTEM MAY BE USED. THE OWNER WILL PAY FOR THE COST OF ENERGY USED. MAINTAIN SYSTEM DURING OPERATION. PROVIDE ADDITIONAL TEMPORARY HEAT AS NECESSARY TO MAINTAIN CONDITIONS SUITABLE FOR CONSTRUCTION.

5. TELEPHONE: PROVIDE TEMPORARY TELEPHONE SERVICE DURING CONSTRUCTION.

6. WATER: UTILIZE EXISTING FACILITIES. OWNER WILL PAY FOR WATER USED.

7. SANITATION: EXISTING FACILITIES MAY BE USED BY CONSTRUCTION PERSONNEL PRIOR TO PROJECT TURNOVER, SUBJECT TO THOROUGH CLEANING AND REPAIR AS NECESSARY TO LEAVE FACILITIES IN NEW CONDITION. WHEN EXISTING FACILITIES ARE NOT OPERATIONAL OR ACCESSIBLE, PROVIDE SUITABLE PORTABLE SANITATION UNITS.

B. REQUIRED SITE EQUIPMENT

1. COPIER: CONTRACTOR'S PREFERENCE.

2. FACSIMILE MACHINE: CONTRACTOR'S PREFERENCE. CONNECT TO PUBLIC PHONE LINES AS REQUIRED FOR COMMUNICATION WITH OWNER / REPRESENTATIVE / OFFICE AND CONTRACTOR'S HOME OFFICE.

3. COMPUTERS: PC'S MUST BE EQUIPPED TO ADEQUATELY PERFORM ELECTRONIC CONSTRUCTION ADMINISTRATION TASKS AS DIRECTED BY THE OWNER AND THE OWNER / REPRESENTATIVE. SYSTEM SHALL INCLUDE ASSOCIATED PRINTER(S). AT LEAST ONE PRINTER SHALL HAVE 11 X 17 INCH GRAPHICS CAPABILITY.

4. WINDOWS (CURRENT VERSIONS) & MICROSOFT OFFICE (CURRENT VERSIONS) FOR EACH COMPUTER.

5. AN INTERNET SERVICE PROVIDER ACCOUNT (ISP), A HIGHSPEED, BROADBAND INTERNET CONNECTION, AND COMPONENTS TO FACILITATE THE NETWORKING OF THE COMPUTERS.

6. ADOBE ACROBAT EXCHANGE (CURRENT VERSIONS), AT LEAST ONE STATION FOR INITIATING DOCUMENTS.

7. ADOBE ACROBAT READER (CURRENT VERSIONS) FOR EACH COMPUTER. (FREE SOFTWARE)

8. CELLULAR PHONE WITH NATIONAL ACCESS PLAN.

C. CONTROLS

1. DUST CONTROL: PROVIDE METHODS TO PREVENT DUST FROM PENETRATING INTO THE ATMOSPHERE, OCCUPIED SPACES, AND OTHER AREAS THAT WOULD BE ADVERSELY AFFECTED BY DUST.

2. WATER CONTROL: COMPLY WITH APPLICABLE JURISDICTIONAL REQUIREMENTS REGARDING WATER USAGE, CONSERVATION, DETENTION, POLLUTION, AND PERMITS.

3. SAFETY BARRIERS: PROVIDE AND MAINTAIN, ALL LAWFUL AND NECESSARY BARRICADES, RAILINGS, LIGHTS, WARNING SIGNS, SIGNALS, AND PRECAUTIONS AS MAY BE REQUIRED TO SAFEGUARD PERSONS, FROM INJURY.

4. SMOKING: SMOKING SHALL BE PROHIBITED IN ALL INTERIOR SPACES.

5. NOISE:

5.1 USE SAWS AND HYDRAULIC IMPACTOR EQUIPMENT INSTEAD OF PNEUMATIC TOOLS AND COMPRESSORS TO REDUCE NOISE.

5.2 EQUIPMENT SHALL BE MUFFLED FOR QUIET OPERATION NOT TO EXCEED 50 DECIBELS AT A DISTANCE OF 20 FEET FROM THE SOURCE.

5.3. PORTABLE STEREO EQUIPMENT SHALL BE INAUDIBLE FROM OCCUPIED SPACES DURING BUSINESS HOURS

D. PROVIDE TEMPORARY WEATHER-TIGHT CLOSURES OF OPENINGS IN EXTERIOR SURFACES TO PROVIDE ACCEPTABLE WORKING CONDITIONS AND PROTECTION FOR MATERIALS, TO ALLOW FOR TEMPORARY HEATING, AND TO PREVENT ENTRY OF UNAUTHORIZED PERSONS. WHERE NECESSARY, PROVIDE DOORS WITH SELF-CLOSING HARDWARE & LOCKS. EXTERIOR ENCLOSURES SHALL BE SUFFICIENTLY WELL CONSTRUCTED TO PREVENT BLOW OFF DURING INCLEMENT WEATHER, AND SHALL BE SEALED TIGHT TO PREVENT WATER PENETRATION AND EXCESSIVE AIR INFILTRATION.

E. MAINTAIN PEDESTRIAN AND VEHICULAR ACCESS TO THE SITE AND WITHIN THE SITE TO PROVIDE FOR EMERGENCY VEHICLE ACCESS AND TO FACILITATE THE ADJACENT BUSINESS OPERATIONS.

F. TEMPORARY CONSTRUCTION:

1. OBTAIN APPROVAL FROM OWNER FOR ALL MODIFICATIONS TO EXISTING SYSTEMS OR FACILITIES NOT INDICATED.

2. REMOVE TEMPORARY SYSTEMS OR FACILITIES WHEN USE IS NO LONGER REQUIRED. CLEAN AND REPAIR DAMAGE CAUSED BY INSTALLATION OR USE OF TEMPORARY SYSTEMS OR FACILITIES.

G. PROTECTION: PROTECT EXISTING AND NEW CONSTRUCTION FROM DAMAGE CAUSED BY CONSTRUCTION OPERATIONS; PROVIDE PROTECTIVE COVERING TO PROTECT SURFACES, AS APPROPRIATE.

H. CONSTRUCTION CLEANING:

1. CONTROL ACCUMULATION OF WASTE MATERIALS AND RUBBISH. DISPOSE OF WASTE OFF-SITE AS APPROVED BY THE OWNER TO MAINTAIN A CLEAN SITE.

2. MAINTAIN AREAS FREE OF DUST AND OTHER CONTAMINANTS DURING FINISHING OPERATIONS.

3. MAINTAIN ALL OCCUPIED SPACES FREE OF DUST AND OTHER CONTAMINANTS PRIOR TO DAILY BUSINESS OPERATIONS. CLEANING SHALL INCLUDE VACUUMING, DUSTING, STAIN AND DIRT REMOVAL, AND CLEANING OF GLASS FURNITURE, AND OTHER SURFACES.

SECTION - 01600 PRODUCT REQUIREMENTS

A. DELIVERY, STORAGE AND HANDLING:

1. TRANSPORT AND HANDLE PRODUCTS BY METHODS TO AVOID PRODUCT DAMAGE.

2. MANUFACTURED PRODUCTS SHALL REMAIN IN MANUFACTURER'S CONTAINERS OR PACKAGING, UNTIL READY FOR INSTALLATION.

3. UNLESS SPECIFIED OTHERWISE, STORE PRODUCTS IN ACCORDANCE WITH MANUFACTURER'S INSTRUCTIONS.

B. PRODUCT OPTIONS AND SUBSTITUTIONS:

1. WHERE SPECIFICATIONS INDICATE A SINGLE PROPRIETARY PRODUCT, SUBSTITUTIONS WILL NOT BE CONSIDERED. FURNISH PRODUCTS SPECIFIED, EXCEPT WHERE "OR APPROVED" IS USED.

2. SUBSTITUTIONS WILL BE CONSIDERED ONLY FOR THE FOLLOWING REASONS:

2.1 A PRODUCT BECOMES UNAVAILABLE DUE TO NO FAULT OF THE CONTRACTOR.

2.2 SUBSEQUENT INFORMATION OR CHANGES INDICATE THAT THE SPECIFIED PRODUCT WILL NOT PERFORM AS INTENDED.

3. DOCUMENT EACH SUBSTITUTION REQUEST WITH COMPLETE DATA SUBSTANTIATING COMPLIANCE OF PROPOSED SUBSTITUTION WITH CONTRACT DOCUMENTS. REQUESTS FOR SUBSTITUTION SHALL BE MADE IN WRITING TO THE ARCHITECT ON DOCUMENT 01601 - SUBSTITUTION REQUEST FORM, AVAILABLE SEPARATELY UPON REQUEST. LIMIT EACH REQUEST TO ONE PROPOSED PRODUCT OR SYSTEM. FOR SUBSTITUTIONS PRIOR TO AGREEMENT, SIGNATURE AND PROJECTED COST DATA ARE NOT REQUIRED.

4. A SUBSTITUTION REQUEST CONSTITUTES A REPRESENTATION THAT CONTRACTOR:

4.1 HAS INVESTIGATED PROPOSED PRODUCT AND HAS DETERMINED THAT IT MEETS OR EXCEEDS, IN ALL RESPECTS, THE SPECIFIED PRODUCT.

4.2 SHALL PROVIDE THE SAME WARRANTY FOR SUBSTITUTION AS FOR SPECIFIED PRODUCT.

4.3. WILL COORDINATE INSTALLATION AND MAKE OTHER CHANGES THAT MAY BE REQUIRED FOR WORK TO BE COMPLETE IN ALL RESPECTS.

4.4. WAIVES CLAIMS FOR ADDITIONAL COSTS THAT MAY SUBSEQUENTLY BECOME APPARENT.

4.5. AGREES TO PAY ALL COSTS OF REDESIGN RELATED TO THE SUBSTITUTION.

5. SUBSTITUTIONS WILL NOT BE CONSIDERED WHEN THEY ARE INDICATED OR IMPLIED ON SHOP DRAWINGS OR PRODUCT DATA SUBMITTALS.

6. ARCHITECT AND OWNER WILL DETERMINE ACCEPTABILITY OF PROPOSED SUBSTITUTION, AND WILL NOTIFY CONTRACTOR OF ACCEPTANCE OR REJECTION WITHIN A REASONABLE TIME.

C. GENERAL PRODUCT INSTALLATION REQUIREMENTS: PERFORM WORK IN ACCORD WITH MANUFACTURER'S INSTRUCTIONS. DO NOT OMIT ANY PREPARATORY STEP OR INSTALLATION PROCEDURE UNLESS SPECIFICALLY MODIFIED OR EXEMPTED BY CONTRACT DOCUMENTS.

SECTION 01700 - PROJECT CLOSEOUT

A. FINAL CLEANING:

CLEAN IN ACCORDANCE WITH EXCELLENT HOUSEKEEPING PRACTICES. REMOVE GREASE, MASTIC, ADHESIVES, DUST, DIRT, STAINS, FINGERPRINTS, LABELS, AND OTHER FOREIGN MATERIALS FROM SIGHT-EXPOSED SURFACES. CLEAN AND SHINE STOREFRONT GLAZING AND MIRRORS. POLISH GLOSSY SURFACES TO SHINE CLEARLY. VERIFY ENTIRE WORK HAS BEEN CLEANED

B. MATERIALS AND MAINTENANCE MANUALS:

MANUALS TO INCLUDE OPERATION AND MAINTENANCE INSTRUCTIONS AND A COMPLETE PARTS LISTS AS FURNISHED BY MANUFACTURER FOR ALL SYSTEMS, EQUIPMENT, FIXTURES. FURNISH FINISHED COPIES IN AN OVERSIZED ENVELOPE, OVERSIZED DRAWINGS ACCORDION-FOLDED. INCLUDE TYPEWRITTEN INDEX AND TABBED DIVIDERS BETWEEN CATEGORIES.

C. EXTRA STOCK:

TURN OVER EXTRA STOCK SPECIFIED IN TECHNICAL SECTIONS TO OWNER'S REPRESENTATIVE. STORE ITEMS WHERE DIRECTED.

D. THE FOLLOWING WORK CONSTITUTES SUBSTANTIAL COMPLETION:

1. ALL CONSTRUCTION TO BE COMPLETE, READY FOR USE FOR WHICH THE PROJECT IS INTENDED.

2. ALL CLEANING , VACUMING AND DUSTING COMPLETE

3. ALL DEBRIS, SCAFFOLDS, LADDERS, TOOLS AND EQUIPMENT REMOVED FROM SITE.

4. MECHANICAL: ALL SYSTEMS IN OPERATING CONDITION, ALL CONTROLS, DIFFUSERS AND REGISTERS COMPLETE; SYSTEMS BALANCED (BALANCING REPORT REQUIRED FOR PUNCHLIST INSPECTION); MAINTENANCE DATA.

5. ELECTRICAL: ALL SYSTEMS IN OPERATING CONDITION, COMPLETE WITH TRIM; ALL LIGHT FIXTURES OPERABLE WITH LAMPS AND LENSES; MAINTENANCE DATA.

6. CERTIFICATE OF OCCUPANCY OBTAINED FROM LOCAL AGENCIES.

7. LANDLORD APPROVAL TO OPEN UNIT FOR BUSINESS.

E. GENERAL CONTRACTOR TO LEAVE 20 CU. YD. DUMPSTER AFTER SUBSTANTIAL COMPLETION FOR RETAIL OPERATIONS TO DISPOSE OF MERCHANDISING TRASH WHEN STOCKING STORE. GC RESPONSIBLE FOR TWO (2) DUMP FEES AS WELL AS HAVING DUMPSTER PERMANENTLY REMOVED.

F. AS-BUILT DOCUMENTS MUST BE SUBMITTED TO OWNER PRIOR TO APPROVAL OF LAST PAYMENT. THIS IS A PUNCHLIST ITEM.

SECTION 03010 - CONCRETE

K. REFER TO STRUCTURAL SHEETS FOR CONCRETE SPECIFICATIONS

SECTION - 05400 COLD FORMED METAL FRAMING

A. SUMMARY: LIGHT GAGE COLD FORMED METAL FRAMING INDICATED ON THE DRAWINGS.

B. QUALITY ASSURANCE:

1. THE WORK OF THIS SECTION IS SUBJECT TO TESTING AND INSPECTION AS SPECIFIED IN 01450.

2. FOR WELDED CONNECTIONS, USE ONLY AWS CERTIFIED WELDERS.

3. REGULATORY REQUIREMENTS: FRAMING SYSTEM SHALL MEET THE REQUIREMENTS OF THE JURISDICTIONAL CODE AUTHORITIES.

C. COMPONENTS:

1. COLD FORMED LIGHT-GAGE STEEL FRAMING: AS INDICATED ON THE STRUCTURAL DRAWINGS; G60 ZINC COATED FINISH IN ACCORDANCE WITH ASTM C653.

2. SCREWS: ASTM C954; SELF-DRILLING, SELF-TAPPING; PAN HEAD; GALVANIZED OR FLUOROPOLYMER COATED STEEL.

3. ZINC RICH TOUCH-UP PAINT: "GALV-WELD", "GALVICAN","ZRC COLD GALVANIZED COMPOUND", OR APPROVED.

D. INSTALLATION

1. INSTALL LIGHTGAGE STRUCTURAL FRAMING IN ACCORDANCE WITH ASTM C1007, UNLESS INDICATED OR SPECIFIED OTHERWISE.

2. ERECT METAL FRAMING AS INDICATED.

3. WELDS SHALL BE IN ACCORDANCE WITH AWS D1.3.

4. METAL FRAMING MEMBERS SHALL BE SAW OR SHEAR CUT. NO TORCH CUTTING IS PERMITTED.

5. CONSTRUCT CORNERS WITH A MINIMUM OF 3 STUDS PER CORNER.

6. FRAME BOTH SIDES OF EXPANSION AND SEISMIC JOINTS. DO NOT BRIDGE JOINTS WITH SYSTEM COMPONENTS OR ACCESSORIES.

7. PROVIDE FRAMING AS REQUIRED TO FORM SOLID BACKING FOR ALL EDGES OF GYPSUM SHEATHING, AND TRIM ACCESSORIES.

8. TOLERANCES:

8.1 PLUMBNESS: PLUMB WITHIN 1/8 INCH IN 10 FEET.

8.2 LOCATION: LOCATED WITHIN 1/4 INCH OF THE REQUIRED LOCATION.

8.3. ALIGNMENT: STUD AND RUNNER FACES TO RECEIVE FINISH

8.4. MATERIALS SHALL NOT VARY GREATER THAN 1/8 INCH FROM THE REQUIRED PLANE, WITH NO ABRUPT JOGS OR BREAKS IN PLANE.

8.5. LEVEL: LEVEL WITHIN 1/8 INCH IN 10 FEET.

9. ERECT MEMBERS IN ONE-PIECE FULL LENGTH. SPLICING AND WIRE TYING OF FRAMING COMPONENTS SHALL NOT BE USED.

10. TOUCH-UP FIELD WELDS AND SCRATCHED OR DAMAGED GALVANIZING WITH ZINC RICH PAINT.

11. TOUCH-UP FIELD WELDS AND SCRATCHED OR DAMAGED GALVANIZING WITH ZINC RICH PAINT.

12. INSTALL FRAMING BETWEEN STUDS FOR ATTACHMENT OF ELECTRICAL BOXES AND OTHER MECHANICAL AND ELECTRICAL ITEMS.

SECTION - 06100 ROUGH CARPENTRY (USE ONLY NON-COMBUSTIBLE BLOCKING IN CONCEALED SPACES

PART 1 GENERAL

1.1 SUMMARY

A. SECTION INCLUDES:
1. WOOD FURRING FOR WALL FINISHES.
2. BLOCKING AND NAILERS FOR ROOFING SYSTEM AND RELATED METAL FLASHINGS.
3. PRESERVATIVE TREATMENT OF WOOD.
4. CONCEALED WOOD BLOCKING FOR SUPPORT OF TOILET AND BATH ACCESSORIES, WALL CABINETS, WOOD TRIM, AND OTHER BLOCKING BEHIND WALL MOUNTED ITEMS.
5. PLYWOOD/PANEL PRODUCTS.
6. STRUCTURAL WALL, AND ROOF FRAMING.
7. WALL SHEATHING.
8. ROOF SHEATHING.
9. SILL GASKETS AND FLASHINGS.
10. MISCELLANEOUS FRAMING AND SHEATHING.
11. TELEPHONE AND ELECTRICAL PANEL BACK BOARDS.

B. RELATED DOCUMENTS: THE CONTRACT DOCUMENTS, AS DEFINED IN THE GENERAL CONDITIONS, APPLY TO THE WORK OF THIS SECTION. ADDITIONAL REQUIREMENTS AND INFORMATION NECESSARY TO COMPLETE THE WORK OF THIS SECTION MAY BE FOUND IN OTHER DOCUMENTS.

1.2 REFERENCES

A. AMERICAN LUMBER STANDARDS COMMITTEE (ALSC):
1. SOFTWOOD LUMBER STANDARDS.
B. APA ENGINEERED WOOD ASSOCIATION (APA):
1. GRADES AND STANDARDS.
C. AMERICAN SOCIETY FOR TESTING AND MATERIALS (ASTM):
1. ASTM A123 - SPECIFICATION FOR ZINC (HOT-DIP GALVANIZED) COATINGS ON IRON AND STEEL PRODUCTS.
2. ASTM A307 - SPECIFICATION FOR CARBON STEEL BOLTS AND STUDS, 60,000 PSI TENSILE STRENGTH.
3. ASTM E84 - TEST METHOD FOR SURFACE BURNING CHARACTERISTICS OF BUILDING MATERIALS.
D. AMERICAN WOOD PRESERVERS ASSOCIATION (AWPA):
1. AWPA - C1 - ALL TIMBER PRODUCTS - PRESERVATIVE TREATMENT BY PRESSURE PROCESSES.
2. AWPA - C15 - WOOD FOR COMMERCIAL-RESIDENTIAL CONSTRUCTION PRESERVATIVE TREATMENT BY PRESSURE PROCESSES.
4. AWPA - M4 - CARE OF PRESERVATIVE TREATED WOOD PRODUCTS.
5. AWPA - P5 - WATER BORNE PRESERVATIVES.
E. NATIONAL FOREST PRODUCTS ASSOCIATION (NFPA):
1. NATIONAL DESIGN SPECIFICATION FOR WOOD CONSTRUCTION (AND SUPPLEMENT).
F. NATIONAL INSTITUTE OF STANDARDS AND TECHNOLOGY (NIST):
1. VOLUNTARY PRODUCT STANDARD PS 1 - STRUCTURAL PLYWOOD.
2. VOLUNTARY PRODUCT STANDARD PS 2 - PERFORMANCE STANDARD FOR WOOD-BASED STRUCTURAL-USE PANELS.
3. VOLUNTARY PRODUCT STANDARD PS 20 - AMERICAN SOFTWOOD LUMBER STANDARD.
G. SOUTHERN PINE INSPECTION BUREAU (SPIB):
1. GRADING RULES.
H. AMERICAN INSTITUTE OF TIMBER CONSTRUCTION (AITC)
1. DESIGN SOURCE
1. WESTERN WOODS PRODUCTS ASSOCIATION (WWPA)
1. DESIGN SOURCE
J. WEST COAST LUMBERMAN'S INSPECTION BUREAU (WCLIB).
1. GRADING RULES.

1.3 QUALITY ASSURANCE

A. LUMBER GRADING AGENCY: LUMBER TO BE GRADE STAMPED BY AN AGENCY CERTIFIED BY THE BOARD OF REVIEW OF THE AMERICAN LUMBER STANDARDS COMMITTEE (ALSC).
B. PLYWOOD GRADING AGENCY: CERTIFIED BY APA.

1.4 DELIVERY, STORAGE AND HANDLING

A. PROVIDE PROPER FACILITIES FOR HANDLING AND STORAGE OF MATERIALS TO PREVENT DAMAGE TO EDGES, ENDS AND SURFACES.
B. KEEP MATERIALS DRY. STACK MATERIALS OFF GROUND A MINIMUM OF 12 INCHES OR IF ON CONCRETE SLAB-ON-GRADE A MINIMUM OF 11/2 INCHES, FULLY PROTECTED FROM WEATHER.

PART 2 PRODUCTS

2.1 MATERIALS

A. LUMBER: VOLUNTARY PRODUCT STANDARD PS 20. MAXIMUM OF 19 PERCENT MOISTURE CONTENT, SURFACED DRY, GRADED UNDER SPIB GRADING RULES.
B. BACKING FOR ELECTRICAL AND TELEPHONE EQUIPMENT: APA-RATED PLYWOOD, C-D PLUGGED, EXPOSURE 1.
1. THICKNESS: 3/4 INCH.

PAUL DHANENS • ARCHITECT

ARCHITECT

LICENSED ARCHITECT
PAUL DHANENS
NO. C-23843
RENEWAL
STATE OF CALIFORNIA

5100 CALIFORNIA AVE. SUITE 107
BAKERSFIELD, CALIFORNIA 93309
TELEPHONE: (661) 326-8936
FACSIMILE: (661) 326-8937

CONSULTANT

COPYRIGHT

PAUL DHANENS ARCHITECT expressly reserves its copyright and other property rights in these documents which are not to be reproduced, changed or copied in any written, graphic or electronic form, nor assigned to any third party without the expressed written consent of PAUL DHANENS ARCHITECT.

NOTICE TO CONTRACTORS
Written dimensions on these drawings shall take precedence over scaled dimensions. Contractor shall verify and be responsible for confirming all dimensions and shall notify the architect immediately of any descripencies or field variations discovered.

PROJECT

TENANT IMPROVEMENT FOR

1966 WEST AVE L
LANCASTER, CA

DATE	ISSUED FOR
6-28-19	BUILDING DEPT SUBMITTAL

NO.	REVISIONS
1	
2	
3	
4	

SPECIFICATION

FILE NAME: 2366A6-0

SHEET

A-6.0

2.2 SHEATHING

A. WOOD SHEATHING:
1. ALL WOOD SHEATHING SHALL BE MANUFACTURED BY A MEMBER COMPANY OF APA - THE ENGINEERED WOOD ASSOCIATION, AND EACH PANEL SHALL BEAR THE APA TRADEMARK INDICATING ITS UNIQUE MATERIAL PROPERTIES. ALL PLYWOOD USED ON EXTERIOR SURFACES SHALL CONFORM TO THE REQUIREMENTS OF THE LATEST EDITION OF VOLUNTARY PRODUCT STANDARD PS 1, "STRUCTURAL PLYWOOD," BY THE NATIONAL INSTITUTE OF STANDARDS AND TECHNOLOGY (NIST). ALL OTHER WOOD SHEATHING SHALL CONFORM TO THE REQUIREMENTS OF THE LATEST EDITION OF VOLUNTARY PRODUCT STANDARD PS 2, "PERFORMANCE STANDARD FOR WOOD-BASED STRUCTURAL-USE PANELS," BY NIST.
2. WHERE EXPOSURE RATING OR SPAN RATING IS NOT GIVEN IN THE CONTRACT DRAWINGS, PROVIDE EXPOSURE 1 AND RATING REQUIRED TO SUIT SUPPORT MEMBER SPACING INDICATED ON DRAWINGS.
3. PROVIDE PANELS WITH TONGUE AND GROOVE EDGES WHERE SPECIFIED IN THE CONTRACT DRAWINGS.
4. EXTERIOR WOOD SHEATHING: PANELS SHALL BE EXPOSURE 1 WITH THICKNESS AS SPECIFIED IN THE CONTRACT DRAWINGS.
a. ROOFS AND OTHER EXTERIOR HORIZONTAL OR SLOPED SURFACES: 5-PLY PLYWOOD WITH GRADE AND SPAN RATING AS SPECIFIED IN THE CONTRACT DRAWINGS. WHERE MULTIPLE LAYERS OF PLYWOOD NO THICKER THAN 3/8 INCH ARE USED TO SHEATHE CURVED SURFACES, PANELS SHALL BE MINIMUM 3-PLY.
b. WALLS: STRUCTURAL-USE WALL PANELS COVERED IN VOLUNTARY PRODUCT STANDARD PS 2.
c. SHEATHING TO BE TREATED WITH PRESERVATIVE OR FIRE-RETARDANT CHEMICALS SHALL CONFORM TO THE REQUIREMENTS OF SECTION 2.5, "WOOD TREATMENT," AND SHALL BE USED ONLY WHERE SPECIFIED IN THE CONTRACT DRAWINGS.
B. WATER-RESISTANT CORE GYPSUM SHEATHING BOARD: ASTM C79; THICKNESS AS INDICATED ON DRAWINGS, 24 OR 48 INCH WIDTH, MAXIMUM PERMISSIBLE LENGTH; ENDS STRAIGHT AND SOLID, EDGES SQUARE. WATER-RESISTANT CORE GYPSUM SHEATHING TO HAVE A WATER-RESISTANT MATERIAL INCORPORATED IN THE CORE. SUBJECT TO COMPLIANCE WITH REQUIREMENTS, PROVIDE ONE OF THE FOLLOWING:
1. "CENTEX AMERICAN GYPSUM SHEATHING," CENTEX AMERICAN GYPSUM CO.
2. "GYPROC GYPSUM SHEATHING," DOMTAR GYPSUM CO.
3. "G-P GYPSUM SHEATHING," GEORGIA-PACIFIC CORP.
4. "GOLD BOND GYPSUM SHEATHING," GOLD BOND BUILDING PRODUCTS DIV., NATIONAL GYPSUM CO.
5. "USG GYPSUM SHEATHING," UNITED STATES GYPSUM CO.

2.3 ACCESSORIES

A. FASTENERS: PROVIDE MANUFACTURERS RECOMMENDED POWER TOOLS FOR EACH TYPE OF FASTENER.
1. NAILS, SPIKES AND STAPLES: ASTM A123, GALVANIZED FOR EXTERIOR LOCATIONS, HIGH HUMIDITY AREAS, AND TREATED WOOD; PLAIN FINISH FOR OTHER INTERIOR LOCATIONS; SIZE AND TYPE TO SUIT APPLICATION, UNLESS OTHERWISE NOTED.
2. BOLTS, NUTS, WASHERS, LAG SCREWS, AND WOOD SCREWS: ASTM A307, MEDIUM CARBON STEEL; SIZE AND TYPE TO SUIT APPLICATION; GALVANIZED FOR EXTERIOR LOCATIONS, HIGH HUMIDITY AREAS, AND TREATED WOOD; PLAIN FINISH FOR OTHER INTERIOR LOCATIONS, OF SIZE AND TYPE TO SUIT APPLICATION, UNLESS OTHERWISE NOTED.
3. EXPANSION SHIELD FASTENERS: FOR ANCHORAGE OF NON-STRUCTURAL ITEMS TO SOLID MASONRY AND CONCRETE.
4. POWDER OR PNEUMATICALLY ACTIVATED FASTENERS: FOR ANCHORAGE OF NON-STRUCTURAL ITEMS TO STEEL.

B. ROOF SHEATHING FASTENERS: GALVANIZED FOR EXTERIOR, HIGH HUMIDITY, AND TREATED WOOD LOCATIONS; PLAIN FINISH ELSEWHERE; SIZE AND TYPE TO SUIT CONDITION UNLESS OTHERWISE NOTED ON CONTRACT DOCUMENTS.

2.4 WOOD TREATMENT

A. PRESERVATIVE PRESSURE-TREATED LUMBER:
1. MANUFACTURERS:
a. "WOLMANIZED PRESSURE-TREATED WOOD", WOLMAN CCA TYPE C, BY HICKSON CORPORATION; ATLANTA, GA; (404) 801-6600.
b. CCA PRESSURE TREATED LUMBER TYPE C, BY HOOVER TREATED WOOD PRODUCTS, INC.; THOMSON, GA; (800) 832-9663.
2. IMPREGNATE LUMBER WITH PRESERVATIVE TREATMENT CONFORMING TO AWPA STANDARD C1 AND P5. APPLY THE PRESERVATIVE IN A CLOSED CYLINDER BY PRESSURE PROCESS IN ACCORDANCE WITH AWPA STANDARD C15.
3. RETENTION OF DRY SALTS:
a. MODERATE SERVICE CONDITIONS (WEATHER EXPOSURE): 0.25 POUNDS PER CUBIC FOOT (OXIDE BASIS).
b. SEVERE CONDITIONS (CONSTANT CONTACT WITH GROUND OR WATER): 0.40 POUNDS PER CUBIC FOOT (OXIDE BASIS).
4. REMOVE EXCESS MOISTURE WHERE SHRINKAGE IS A SERIOUS FAULT OR WHERE TREATED LUMBER WILL BE IN CONTACT WITH PLASTER, OR EIFS, AND WHERE WATER-BORNE TREATED LUMBER IS TO BE PAINTED OR STAINED.
5. LUMBER SHALL BE DRIED TO 15-19 PERCENT MOISTURE CONTENT AFTER TREATMENT, AND MATERIAL TO BE PAINTED OR STAINED SHALL HAVE KNOTS AND PITCH STREAKS SEALED AS WITH UNTREATED WOOD.
6. LIBERALLY BRUSH FRESHLY CUT SURFACES, BOLT HOLES AND MACHINED AREAS WITH THE SAME PRESERVATIVE IN ACCORDANCE WITH AWPA STANDARD M4.

B. WOOD REQUIRING PRESSURE-TREATMENT:
1. LUMBER, PRESERVATIVE TREATED: NAILERS, BLOCKING, STRIPPING, AND SIMILAR ITEMS IN CONJUNCTION WITH ROOFING, FLASHING, AND OTHER CONSTRUCTION. SILL PLATES, BLOCKING, FURRING, STRIPPING, SLEEPERS AND SIMILAR ITEMS IN CONTACT WITH CONCRETE.

C. FIRE-RETARDANT TREATED LUMBER:
1. MANUFACTURERS:
a. "DRICON FIRE RETARDANT TREATED WOOD", BY ARCH WOOD PROTECTION, INC.; SMYRNA, GEORGIA; (866) 873-3789.

D. WOOD REQUIRING FIRE RETARDANT TREATMENT:
1. DIMENSION LUMBER OR PANELS ONLY AS SPECIFIED IN THE CONTRACT DRAWINGS.

PART 3 EXECUTION

3.1 EXAMINATION

A. EXAMINE AREAS TO RECEIVE ROUGH CARPENTRY WORK AND VERIFY FOLLOWING:
1. THAT INSTALLATION OF BUILDING COMPONENTS TO RECEIVE ROUGH CARPENTRY WORK IS COMPLETE.
2. THAT SURFACES ARE SATISFACTORY TO RECEIVE WORK.
3. THAT SPACING, DIRECTION AND DETAILS OF SUPPORTS ARE CORRECT TO ACCOMMODATE INSTALLATION OF BLOCKING, BACKING, STRIPPING, FURRING AND NAILING STRIPS.

3.2 SITE TREATMENT OF WOOD MATERIALS

A. RETREAT SITE SAWN ENDS WITH BRUSH APPLICATION ACCORDING TO MANUFACTURER'S INSTRUCTIONS. ALLOW PRESERVATIVE TO CURE PRIOR TO PLACING MEMBERS.

3.3 INSTALLATION

A. INSTALL MISCELLANEOUS BLOCKING, NAILING STRIPS, FRAMING, AND SHEATHING AS DETAILED ON DRAWINGS. COORDINATE TO ALLOW PROPER ATTACHMENT OF WORK OF OTHER SECTIONS.
1. SECURE WOOD BLOCKING, CANTS, NAILERS, IN PLACE USING FASTENERS SPECIFIED. USE ONLY RECOMMENDED POWER TOOLS FOR PLACEMENT OF FASTENERS.
2. RECESS HEADS OF FASTENERS BELOW SURFACE OF WOOD MEMBERS.

B. INSTALL MEMBERS TRUE TO LINE, PLUMB, AND LEVEL.

C. SECURE IN PLACE WITH APPROPRIATE FASTENERS. USE FASTENERS OF CORRECT SIZE THAT WILL NOT PENETRATE MEMBERS WHERE OPPOSITE SIDE WILL BE EXPOSED TO VIEW OR REQUIRE FINISHING. DO NOT SPLIT WOOD WITH FASTENERS; SET PANEL PRODUCTS TO ALLOW EXPANSION AT JOINTS.

D. DO NOT SPLICE STRUCTURAL MEMBERS BETWEEN SUPPORTS.

E. CONSTRUCT MEMBERS OF CONTINUOUS PIECES OF LONGEST POSSIBLE LENGTHS.

F. PLACE PLYWOOD ROOF SHEATHING AS SHOWN ON DRAWINGS. SECURE SHEETS OVER FIRM BEARING. PANEL END JOINTS SHALL OCCUR OVER FRAMING. ALLOW 1/8 INCH SPACING AT PANEL ENDS AND PANEL EDGES UNLESS OTHERWISE RECOMMENDED BY PANEL MANUFACTURER.

3.4 FIELD QUALITY CONTROL

A. SECTION 01400 - QUALITY CONTROL: PROCEDURES FOR INSPECTION OF WORK.

B. FRAMING INSPECTION:
1. INSPECT WOOD FRAMING INSTALLATION AND CONNECTIONS AT COMPLETION OF EACH PHASE OF WOOD CONSTRUCTION FOR CORRECT INSTALLATION, NAILING, CONNECTIONS, AND FASTENERS.
2. INSPECT AND VERIFY THAT TYPES AND SPACING OF FASTENERS ARE INSTALLED IN LOCATIONS SPECIFIED OR INDICATED ON DRAWINGS.
3. INSPECT TYPES, LOCATIONS, AND FASTENERS FOR STRUCTURAL METAL FRAMING CONNECTORS.
4. INSPECT WOOD TO STEEL BEAM CONNECTIONS.

C. CORRECT DEFICIENCIES IN WORK IF INSPECTION INDICATES WORK IS NOT IN COMPLIANCE WITH CONTRACT DOCUMENTS.

SECTION 06200 - FINISH CARPENTRY

B. DESCRIPTION OF SYSTEMS:

SEE "RESPONSIBILITY SCHEDULE" FOR ITEMS FURNISHED BY OWNER AND INSTALLED BY CONTRACTOR (FOIC)

C. CODES AND STANDARDS:

AWI, QUALITY-STANDARDS AND GUIDE SPECIFICATIONS MANUAL.

D. ROUGH LUMBER AND PLYWOOD:

LUMBER HAVING MODULES OF ELASTICITY OF NOT LESS THAN 1,600,000 PSI AND ALLOWABLE FIBER STRESS OF MORE THAN 1400 PSI, IN STANDARD DIMENSIONS, MOISTURE CONTENT NOT MORE THAN 19%. FIRE TREATMENT OF ALL ROUGH LUMBER AND PLYWOOD IS AS FOLLOWS:

1. ROUGH LUMBER TREATED WITH PRESSURE FIRE RETARDANT PER AMERICAN WOOD PRESERVERS ASSOCIATION STANDARD AWPA C20, EACH PIECE TO BEAR UL LABEL, "FR-S"

2. PLYWOOD TREATED WITH PRESSURE FIRE RETARDANT PER AMERICAN WOOD PRESERVERS ASSOCIATION STANDARD AWPA C27, EACH PIECE TO BEAR UL LABEL, CLASS 1. PLYWOOD CONCEALED FROM VIEW ONLY.

D. FINISHED LUMBER:

1. INTERIOR STAIN GRADE WOOD: POPLAR, CONFORM TO AWI QUALITY STANDARDS, "ECONOMY" GRADE, AWI GRADE 1.

2. MOISTURE CONTENT, KILN DRIED, NOT MORE THAN 9% WHEN DELIVERED

3. FLAME SPREAD RATING AS NOTED ON DRAWINGS OR AS REQUIRED BY CODE.

E. PLYWOOD:

1. PAINT GRADE PLYWOOD APA GROUP 1, GRADE A-C EXTERIOR PLYWOOD.

2. FLAME SPREAD RATING AS NOTED ON DRAWING OR AS REQUIRED BY CODE.

F. PARTICLE BOARD:

1. INDUSTRIAL GRADE PARTICLE BOARD, 40-45 LB. DENSITY WESTERN GRADE PREFERRED

2. PREPARE SURFACE FOR FIRE RETARDANT COATING

G. INSTALLATION:

1. INSTALL ALL MATERIAL WITH TIGHT JOINTS.

2. EASE ALL EXTERNAL CORNERS

3. ALL RUNNING TRIM ONE PIECE UP TO 10'-0". MATCH GRAIN AND COLOR PIECE TO PIECE.

4. USE FINISH NAILS EXCEPT WHERE SCREWS INDICATED. SET FASTENERS FLUSH FOR PUTTY APPLICATION.

SECTION 06400 - ARCHITECTURAL WOODWORK

A. ALL WORK IS TO BE PERFORMED IN COMPLIANCE WITH "ARCHITECTURAL WOODWORK QUALITY STANDARDS, GUIDE SPECIFICATIONS AND QUALITY CERTIFICATION PROGRAM" CUSTOM GRADE, AS PUBLISHED BY THE ARCHITECTURAL WOODWORK INSTITUTE. ANY QUESTIONS CONCERNING APPLICATION OF THESE STANDARDS SHALL BE REFERRED TO THE ARCHITECT.

B. G.C. TO PROVIDE AND INSTALL WOODWORK AS INDICATED ON THE PLANS.

SECTION - 07200 - THERMAL AND MOISTURE PROTECTION

A. MATERIALS:

1. R-19 THERMAL BATT INSULATION: PREFORMED GLASS FIBER BATT WITH FSK-25 REFLECTIVE MEMBRANE ON ONE SIDE.

2. TAPE: TO MATCH FOIL SCRIM KRAFT FACE; 2 INCH WIDTH.

3. R-10 RIGID PERIMETER INSULATION UNDER SLABS ON GRADE.

B. INSTALLATION:

1. INSTALL INSULATION IN ACCORDANCE WITH MANUFACTURER'S RECOMMENDATIONS AND AS INDICATED.

2. TRIM INSULATION NEATLY TO FIT SPACES. INSTALL WITHOUT GAPS OR VOIDS.

3. INSTALLATION OF THERMAL BATT INSULATION:

3.1 INSTALL INSULATION WITH VAPOR BARRIER TOWARD WARM SIDE OF BUILDING SPACES. VAPOR BARRIER SHALL BE CONTINUOUS. TAPE SEAL TEARS OR CUTS IN VAPOR BARRIER.

3.2 PACK BATT INSULATION IN SHIM SPACES AT PERIMETER OF WINDOW ASSEMBLY TO MAINTAIN CONTINUITY OF THERMAL BARRIER.

3.3. MECHANICAL FASTENING:

3.3.1 AT LOCATIONS WHERE NO FRAMING IS PRESENT TO SUPPORT THE INSULATION, PROVIDE METAL IMPALING PINS AND RETAINERS TO HOLD THE INSULATION FIRMLY IN PLACE.

3.3.2 MECHANICALLY OR ADHESIVELY BOND THE RETAINING PINS TO THE SUBSTRATE IN ACCORDANCE WITH THE MANUFACTURER'S RECOMMENDATIONS.

3.3.3. SPACE PINS AT MAXIMUM 24 INCHES ON CENTER ALONG THE EDGES AND WITHIN THE FIELD OF THE BLANKET. PLACE EDGE PINS WITHIN 6 INCHES FROM THE EDGE OF THE BATT.

4. INSTALLATION OF RIGID PERIMETER INSULATION:
INSTALL INSULATION FROM TOP OF FOOTING TO UNDERSIDE OF SLAB AND BENEATH THE SLAB HORIZONTALLY 24" FROM THE INTERIOR FACE OF THE FOOTING.

C. R VALUE SCHEDULE:

1. PROVIDE INSULATION IN SUFFICIENT THICKNESS TO PROVIDE THE FOLLOWING R VALUES:

1.1 VERTICAL ASSEMBLIES WITH HORIZONTAL HEAT FLOW: R20.5.

1.2 THE ABOVE R-VALUES ARE REQUIRED FOR THE TOTAL INSULATION IN THE ASSEMBLY. THE BATT INSULATION MAY BE COMBINED WITH OTHER INSULATION IN THE ASSEMBLY TO OBTAIN THE TOTAL R-VALUE REQUIRED. THE R-VALUE IS FOR THE INSULATION ONLY AND MAY NOT INCLUDE AIR FILM VALUES, AND R-VALUES FOR OTHER MATERIALS IN THE ASSEMBLY SUCH AS CONCRETE AND GYPSUM BOARD.

2. THE PERIMETER RIGID INSULATION SHALL BE OF R VALUE 10.

SECTION 07241 - EXTERIOR INSULATION AND FINISH SYSTEMS - CLASS PB

1.1 GENERAL

A. DEFINITIONS: SYSTEMS REFER TO CLASS PB EXTERIOR INSULATION AND FINISH SYSTEM (EIFS) THAT IS DEFINED BY ASTM PS 49 AS A "NONLOAD BEARING, EXTERIOR WALL CLADDING SYSTEM THAT CONSISTS OF AN INSULATION BOARD ATTACHED EITHER ADHESIVELY, MECHANICALLY, OR BOTH TO THE SUBSTRATE; AN INTEGRALLY REINFORCED BASE COAT; AND A TEXTURE PROTECTIVE FINISH COAT." SYSTEM MANUFACTURER REFERS TO EIFS MANUFACTURER.

B. THIS SECTION COVERS APPLICATIONS OVER PROPRIETARY PLAYWOOD SHEATHING.

C. PHYSICAL PROPERTIES: EIFS COMPLYING WITH PERFORMANCE CHARACTERISTICS IN "EIMA GUIDELINE SPECIFICATION FOR EXTERIOR INSULATION AND FINISH SYSTEMS, CLASS PB," INCLUDING WIND LOAD PER ASTM E 330 AS INDICATED AND IMPACT CLASSIFICATION AND RANGE PER EIMA 101.86 AS FOLLOWS:

STANDARD IMPACT RESISTANCE: 25-49 INCH-LB

1. MEDIUM IMPACT RESISTANCE: 50-89 INCH-LB).
2. HIGH IMPACT RESISTANCE: 90-150 INCH-LB (10.2-17 J).
3. ULTRA-HIGH IMPACT RESISTANCE: MORE THAN 150 INCH-LB (17 J).

A. SUBMITTALS: IN ADDITION TO PRODUCT DATA, SUBMIT THE FOLLOWING:

1. SHOP DRAWINGS: SHOW FABRICATION AND INSTALLATION OF SYSTEM INCLUDING PLANS, ELEVATIONS, SECTIONS, DETAILS OF COMPONENTS, JOINT LOCATIONS AND CONFIGURATIONS WITHIN SYSTEM AND BETWEEN SYSTEM AND CONSTRUCTION PENETRATING IT, TERMINATION DETAILS, AND ATTACHMENTS TO CONSTRUCTION BEHIND SYSTEM.

a. FOR INSTALLED PRODUCTS INDICATED TO COMPLY WITH CERTAIN DESIGN LOADS, INCLUDE STRUCTURAL ANALYSIS DATA SEALED AND SIGNED BY THE QUALIFIED PROFESSIONAL ENGINEER WHO WAS RESPONSIBLE FOR THEIR PREPARATION.

2. SAMPLES FOR EACH FINISH, COLOR, TEXTURE, AND PATTERN SPECIFIED

3. INSTALLER CERTIFICATES: SIGNED BY SYSTEM MANUFACTURER CERTIFYING THAT INSTALLERS COMPLY WITH SPECIFIED REQUIREMENTS.

4. MATERIAL CERTIFICATES: SIGNED BY MANUFACTURERS OR A THIRD-PARTY AGENCY APPROVED BY SYSTEM MANUFACTURER CERTIFYING THAT INSULATION AND JOINT SEALANTS COMPLY WITH PROJECT REQUIREMENTS. INCLUDE JOINT SEALANT MANUFACTURER'S INTERPRETATION OF TEST RESULTS RELATIVE TO SEALANT PERFORMANCE AND RECOMMENDATIONS FOR PRIMERS AND SUBSTRATE PREPARATION NEEDED TO OBTAIN ADHESION. VERIFY COMPATIBILITY WITH ADJACENT MATERIALS, SUBSTRATES AND CONSTRUCTION.

5. MANUFACTURER'S CERTIFICATE OF COMPLIANCE WITH EIMA STANDARDS.

6. COMPATIBILITY AND ADHESION TEST REPORTS: FROM SEALANT MANUFACTURER.

7. PRODUCT TEST REPORTS: BASED ON COMPREHENSIVE TESTING OF CURRENT PRODUCTS BY A QUALIFIED IN DEPENDANT TESTING AND INSPECTING AGENCY.

8. QUALIFICATION DATA FOR FIRMS AND PERSONS SPECIFIED IN THE QUALITY ASSURANCE ARTICLE OF THE SECTION TO DEMONSTRATE THEIR CAPABILITIES AND EXPERIENCE. INCLUDE LISTS OF COMPLETED PROJECTS WITH PROJECT NAMES AND ADDRESSES, NAMES AND ADDRESSES OF ARCHITECTS AND OWNERS, AND OTHER RELEVANT INFORMATION.

9. RESEARCH REPORTS OR EVALUATION REPORTS OF THE MODEL BUILDING CODE ORGANZATION ACCEPTABLE TO AUTHORITIES HAVING JURISDICTION THAT EVIDENCE SYSTEMS COMPLIANCE WITH BUILDING CODE IN JURISDICTION OF PROJECT.

1.1 REFERNCE DOCUMENTS

A. BUILDING CODE STANDARDS:

1. UBC STANDARD 26-4, (FORMERLY 17-6), "METHOD OF TEST FOR THE EVALUATION OF FLAMMABILITY CHARACTERISTICS OF EXTERIOR, NONLOAD-BEARING WALL PANEL ASSEMBLIES USING FOAM PLASTIC INSULATION", 2012 INTERNATIONAL CONFERENCE OF BUILDING OFFICIALS (ICBO).

2. SECTION 1406.0, 2012 INTERNATIONAL CONFERENCE OF BUILDING OFFICIALS (ICBO).

3. SECTION 2603.5, 2012 INTERNATIONAL CONFERENCE OF BUILDING OFFICIALS (ICBO).

B. EIFS INDUSTRY MEMBERS ASSOCIATION STANDARDS AND PUBLICATIONS:

1. 101.01 - STANDARD TEST METHOD FOR FREEZE-THAW RESISTANCE OF EXTERIOR INSULATION FINISHING SYSTEMS (EIFS), CLASS PB (MODIFIED ASTM C-67).

2. 101.02 - STANDARD TEST METHOD FOR RESISTANCE TO WATER PENETRATION OF EXTERIOR INSULATION FINISHING SYSTEMS (EIFS), CLASS PB (MODIFIED ASTM E 331).

3. 101.03 - STANDARD TEST METHOD FOR DETERMINING TENSILE ADHESION STRENGTH OF EXTERIOR INSULATION FINISHING SYSTEMS (EIFS), CLASS PB (MODIFIED ASTM C-297).

4. 101.86 - STANDARD TEST METHOD FOR RESISTANCE OF EXTERIOR

5. INSULATION FINISHING SYSTEMS (EIFS) TO THE EFFECTS OF RAPID DEFORMATION (IMPACT).

6. 105.01 - STANDARD TEST METHOD FOR ALKALI RESISTANCE OF GLASS FIBER REINFORCING MESH FOR USE IN EXTERIOR INSULATION FINISHING SYSTEMS.

7. 300.01 - STANDARD TEST METHOD FOR DETERMINING TENSILE ADHESION PROPERTIES OF SEALANTS WHEN USED WITH EXTERIOR INSULATION FINISHING SYSTEMS.

8. EIMA GUIDE FOR USE OF SEALANTS WITH EXTERIOR INSULATION FINISHING SYSTEMS.

9. EIMA GUIDELINE SPECIFICATION FOR EXTERIOR INSULATION FINISHING SYSTEMS.

1.1 QUALITY ASSURANCE

A. MANUFACTURER QUALIFICATIONS: FIRM WITH MINIMUM 15 YEARS EXPERIENCE IN MANUFACTURING SYSTEMS SIMILAR TO THOSE INDICATED FOR THIS PROJECT AND THAT HAVE A RECORD OF SUCCESSFUL IN-SERVICE PERFORMANCE, WHO IS A CURRENT MEMBER OF THE EIMA.

B. INSTALLER QUALIFICATIONS: EXPERIENCED INSTALLER WHO IS CERTIFIED IN WRITING BY SYSTEM MANUFACTURER AS QUALIFIED TO INSTALL MANUFACTURER'S SYSTEM.

C. SINGLE SOURCE RESPONSIBILITY: OBTAIN MATERIALS FOR A SYSTEM FROM ONE SOURCE AND BY A SINGLE MANUFACTURER OR BY MANUFACTURER'S APPROVED BY THE SYSTEM MANUFACTURER AS COMPATIBLE WITH OTHER SYSTEM COMPONENTS.

D. PREINSTALLATION CONFERENCE: CONDUCT CONFERENCE AT PROJECT SITE WITH PARTIES ASSOCIATED WITH THE WORK.

1.2 COORDINATION AND STORAGE

A. ENVIRONMENTAL CONDITIONS: DO NOT INSTALL SYSTEM WHEN AMBIENT OUTDOOR AIR AND SUBSTRATE TEMPERATURES ARE 40 DEGREES F AND FALLING UNLESS TEMPORARY PROTECTION AND HEAT ARE PROVIDED TO MAINTAIN AMBIENT TEMPERATURES ABOVE 40 DEGREES F DURING THE INSTALLATION OF WET MATERIALS AND UNTIL THEY HAVE DRIED THOROUGHLY AND BECOME WEATHER RESISTANT, BUT NOT LESS THAN 24 HOURS AFTER INSTALLATION.

B. PROVIDE PROTECTION OF SURROUNDING AREAS AND ADJACENT CONSTRUCTION.

C. COORDINATE INSTALLATION OF SYSTEM WITH RELATED UNITS OF WORK SPECIFIED IN OTHER SECTIONS TO ENSURE THAT WALL ASSEMBLIES, INCLUDING SHEATHING, FLASHING, TRIM AND JOINT SEALERS ARE PROTECTED AGAINST DAMAGE FROM AFFECTS OF WEATHER, AGE, CORROSION AND OTHER CAUSES.

1.3 WARRANTY

A. GENERAL WARRANTY: THE SPECIAL WARRANTY SUBMITTED UNDER THIS SECTION SHALL NOT DEPRIVE THE OWNER OF OTHER RIGHTS AND REMEDIES THAT THE OWNER MAY HAVE UNDER OTHER PROVISIONS OF THE CONTRACT DOCUMENTS AND IS IN ADDITIONS TO AND RUNS CONCURRENT WITH OTHER WARRANTIES MADE BY THE CONTRACTOR UNDER REQUIREMENTS OF THE CONTRACT DOCUMENTS.

B. SPECIAL WARRANTY: SUBMIT A WRITTEN WARRANTY SIGNED BY AUTHORIZED REPRESENTATIVES OF THE MANUFACTURER AND INSTALLER WARRANTING THAT PORTIONS OF THE WORK INVOLVING EXTERIOR INSULATION AND FINISHING SYSTEM IS OF GOOD QUALITY, FREE FROM DEFECTS AND IN CONFORMANCE WITH THE REQUIREMENTS OF THE CONTRACT DOCUMENTS AND FURTHER PROMISING TO REPAIR OR REPLACE DEFECTIVE WORK DURING A 1 YEAR PERIOD FOLLOWING COMPLETION OF THAT PORTION OF THE WORK.

1. DEFECTIVE IS DEFINED TO INCLUDE THE FOLLOWING:
A. STRUCTURAL FAILURES INCLUDING, BUT NOT LIMITED TO EXCESSIVE DEFLECTION.
B. NOISE OR VIBRATION CAUSED BY THERMAL MOVEMENTS.
C. FAILURE OF SYSTEM TO MEET PERFORMANCE REQUIREMENTS.
D. DETERIORATION OF FINISHES AND OTHER MATERIALS BEYOND NORMAL WEATHERING.
E. WATER LEAKAGE.

1.4 PERFORMANCE REQUIREMENTS

A. PROVIDE SYSTEMS THAT COMPLY WITH THE FOLLOWING PERFORMANCE REQUIREMENTS:

1. BOND INTEGRITY: FREE FROM BOND FAILURE WITHIN SYSTEM COMPONENTS OR BETWEEN SYSTEM AND SUPPORTING WALL CONSTRUCTION, RESULTING FROM EXPOSURE TO FIRE, WIND LOADS, WEATHER, OR OTHER IN-SERVICE CONDITIONS.

2. WEATHERTIGHTNESS: RESISTANT TO WATER PENETRATION FROM EXTERIOR INTO SYSTEM ASSEMBLIES BEHIND IT OR THROUGH THEM INTO INTERIOR OF BUILDING THAT RESULTS IN DETERIORATION OF THERMAL INSULATING EFFECTIVENESS OR OTHER DEGRADATION OF SYSTEM AND ASSEMBLIES BEHIND SYSTEM, INCLUDING SUBSTRATES, SUPPORTING WALL CONSTRUCTION, AND INTERIOR FINISH.

B. PHYSICAL PROPERTIES: PROVIDE EXTERIOR FINISH AND INSULATION SYSTEMS WHOSE PHYSICAL PROPERTIES AND STRUCTURAL PERFORMANCE COMPLY WITH THE FOLLOWING REQUIREMENTS WHEN TESTED PER METHOD REFERENCED:

1. ACCELERATED WEATHERING CHARACTERISTICS: SAMPLE OF SIZE SUITABLE FOR TEST EQUIPMENT AND CONSISTING OF 1 INCH THICK EXTERIOR INSULATION SYSTEM MOUNTED ON INCH THICK GYPSUM BOARD, CURED FOR 28 DAYS, SHOWS NO EVIDENCE OF CRACKING, FLAKING OR DELETERIOUS EFFECTS AFTER TESTING FOR 2,000 HOURS PER METHOD 1 OF ASTM G 23.

2. WATER PENETRATION: SAMPLE CONSISTING OF 1 INCH THICK EXTERIOR INSULATION AND FINISH SYSTEM MOUNTED ON INCH THICK GYPSUM BOARD, CURED FOR 28 DAYS, SHOWS NO WATER PENETRATION INTO THE PLANE OF THE INNERMOST FACE OF THE TEST SPECIMEN UNDER 2.86 PSF OF AIR PRESSURE DIFFERENCE ACROSS THE SPECIMEN DURING A 15 MINUTE TEST PERIOD WHEN TESTED PER ASTM E 331.

3. WATER RESISTANCE: SAMPLE CONSISTING OF 1 INCH THICK EXTERIOR INSULATION AND FINISH SYSTEM MOUNTED ON INCH THICK GYPSUM BOARD, CURED FOR 28 DAYS, SHOWS NO DELETERIOUS EFFECTS AFTER TESTING FOR 14 DAYS PER ASTM D 2247.

4. SALT SPRY RESISTANCE: SAMPLE CONSISTING OF 1 INCH THICK EXTERIOR INSULATION AND FINISH SYSTEM MOUNTED ON INCH THICK GYPSUM BOARD, CURED FOR 28 DAYS, SHOWS NO DELETERIOUS EFFECTS AFTER TESTING FOR 300 HOURS PER ASTM B 117.

5. ABSORPTION FREEZE RESISTANCE: THREE SAMPLES, 4 BY 8 BY 2 INCHES IN SIZE, CONSISTING OF EXTERIOR INSULATION AND FINISH SYSTEM COATED ON ALL SIDES WITH BASE AND FINISH COATS, INCLUDING REINFORCING FABRIC, CURED FOR 28 DAYS, SHOWS NO VISIBLE CHANGE WHEN SUBJECTED TO 4 DAYS UNDERWATER SOAK FOLLOWED BY 60 CYCLES OF ALTERNATING EXPOSURE FOR 2 HOURS TO MINUS 10 DEGREES C AND 2 HOURS TO PLUS 20 DEGREES C PER ASTM C 67.

6. MILDEW RESISTANCE: SAMPLE CONSISTING OF FINISH COAT APPLIED TO A 2 INCH BY 2 INCH CLEAN GLASS SUBSTRATE, CURED FOR 28 DAYS, SHOWS NO MILDEW GROWTH WHEN TESTED PER MIL STANDARD 810C, METHOD 508.

7. IMPACT RESISTANCE: SAMPLE CONSISTING OF 1 INCH THICK EXTERIOR INSULATION AND FINISH SYSTEM WHEN CONSTRUCTED, CONDITIONED, AND TESTED PER EIMA 101.86, PRODUCES THE FOLLOWING IMPACT CLASSIFICATION AND RANGE:
A. STANDARD IMPACT RESISTANCE: 25-49 INCH LB.
B. MEDIUM IMPACT RESISTANCE: 50-89 INCH LB.
C. HIGH IMPACT RESISTANCE: 90-150 INCH LB.

8. NEGATIVE WIND LOAD PERFORMANCE: SAMPLE ASSEMBLY 48 BY 48 INCHES IN SIZE, CONSISTING OF STUDS, SHEATHING, AND 2 INCH THICK EXTERIOR INSULATION AND FINISH SYSTEM, SHOWS CAPABILITY TO WITHSTAND WIND LOADS INDICATED WHEN TESTED PER ASTM E 330.

C. SEISMIC LOADS: PROVIDE EXTERIOR INSULATION AND FINISH SYSTEM, INCLUDING ANCHORAGE, CAPABLE OF WITHSTANDING THE EFFECTS OF EARTHQUAKE MOTIONS CALCULATED ACCORDING TO REQUIREMENTS OF AUTHORITIES HAVING JURISDICTION OR ASCE 7-95, "MINIMUM DESIGN LOADS FOR BUILDINGS AND OTHER STRUCTURES", SECTION 9, "EARTHQUAKE LOADS" WHICHEVER ARE MORE STRINGENT.

1.1 DELIVERY, STORAGE AND HANDLING
A. DELIVER PRODUCTS IN ORIGINAL, UNOPENED PACKAGES WITH MANUFACTURER'S LABELS IDENTIFYING PRODUCTS LEGIBLE AND INTACT.
B. STORE MATERIALS INSIDE AND UNDERCOVER AND KEEP THEM DRY AND PROTECTED FROM THE WEATHER, DIRECT SUNLIGHT, SURFACE CONTAMINATION, AGING, CORROSION, DAMAGING TEMPERATURES, DAMAGE FROM CONSTRUCTION TRAFFIC AND OTHER CAUSES.

1.2 PRODUCTS
A. AVAILABLE MANUFACTURERS: SUBJECT TO COMPLIANCE WITH REQUIREMENTS, MANUFACTURERS OFFERING CLASS PB SYSTEMS THAT MAY BE INCORPORATED INTO THE WORK INCLUDE, BUT ARE NOT LIMITED TO, THE FOLLOWING:
B. MANUFACTURERS: SUBJECT TO COMPLIANCE WITH REQUIREMENTS, PROVIDE CLASS PB SYSTEMS BY ONE OF THE FOLLOWING:
1. DRYVIT SYSTEMS, INC.
2. SENERGY DIV.; OF HARRIS SPECIALTY CHEMICALS, INC.
3. STO CORP.; STO FINISH SYSTEMS DIV.
4. TEC INC.; AN H.B. FULLER CO.
C. COMPATIBILITY: SUBSTRATES, ADHESIVE, BOARD INSULATION, REINFORCING MESHES, BASE- AND FINISH-COAT MATERIALS, SEALANTS, AND ACCESSORIES THAT ARE COMPATIBLE WITH ONE ANOTHER AND APPROVED FOR USE BY SYSTEM MANUFACTURER.
D. COLORS, TEXTURES, AND PATTERNS OF FINISH COAT: ARCHITECT'S SELECTIONS FROM SYSTEM MANUFACTURER'S FULL RANGE OF COLORS, TEXTURES, AND PATTERNS FOR TYPE OF FINISH COAT INDICATED.
E. ADHESIVE FOR APPLICATION OF INSULATION: SYSTEM MANUFACTURER'S STANDARD FORMULATION COMPLYING WITH THE FOLLOWING REQUIREMENTS:
1. FACTORY-MIXED FORMULATION DESIGNED FOR ADHESIVE ATTACHMENT OF INSULATION TO SUBSTRATES OF TYPE INDICATED, AS RECOMMENDED BY SYSTEM MANUFACTURER.
I. MOLDED-POLYSTYRENE BOARD INSULATION: COMPLY WITH SYSTEM MANUFACTURER'S REQUIREMENTS, ASTM C 578 FOR TYPE 1, AND "EIMA GUIDELINE SPECIFICATION FOR EXPANDED POLYSTYRENE (EPS) INSULATION BOARD" FOR MORE STRINGENT REQUIREMENTS, APPROVED BY SYSTEM MANUFACTURER FOR MATERIAL QUALITIES, INCLUDING CORNER SQUARENESS, OTHER DIMENSIONAL TOLERANCES, AND THE FOLLOWING:
1. SIZE BOARDS NOT MORE THAN 24 BY 48 INCHES AND IN THICKNESS INDICATED BUT NOT MORE THAN 4 INCHES OR LESS THAN THAT ALLOWED BY ASTM PS 49.
2. AGE INSULATION IN BLOCK FORM PRIOR TO CUTTING AND SHIPPING BY AIR DRYING FOR NOT LESS THAN 6 WEEKS OR BY ANOTHER METHOD APPROVED BY SYSTEM MANUFACTURERTHAT PRODUCES EQUIVALENT RESULTS.
3. NOMINAL DENSITY: 1.0 PCF FOR EACH BOARD.
4. THERMAL RESISTANCE: MINIMUM 4.0 AT 40 DEGREES F, 3.6 AT 75 DEGREES F WHEN TESTED IN ACCORDANCE WITH ASTM C 518.
5. PROVIDE SHAPES AND DENSITIES REQUIRED TO MAINTAIN SPECIAL SHAPES, IF REQUIRED.
J. REINFORCING MESH: BALANCED, ALKALI-RESISTANT, OPEN-WEAVE GLASS-FIBER MESH TREATED FOR COMPATIBILITY WITH OTHER SYSTEM MATERIALS, MADE FROM CONTINUOUS MULTIEND STRANDS WITH RETAINED MESH TENSILE STRENGTH OF NOT LESS THAN 145 LBF/IN. AND 150 LBS IN WARP AND FILL DIRECTIONS PER ASTM D 5035, COMPLYING WITH ASTM D 578 AND THE FOLLOWING REQUIREMENTS FOR MINIMUM WEIGHT:
1. STANDARD REINFORCING MESH: NOT LESS THAN 4.0 OZ/SQ. YD. (136 G/SQ. M).
2. DETAIL REINFORCING MESH: NOT LESS THAN 4 OZ/SQ. YD. (136 G/SQ. M).
3. CORNER REINFORCING MESH: NOT LESS THAN 7.2 OZ/SQ. YD. (244 G/SQ. M).
K. BASE-COAT MATERIALS: SYSTEM MANUFACTURER'S STANDARD MIXTURE COMPLYING WITH THE FOLLOWING REQUIREMENTS:
1. FACTORY-MIXED FORMULATION OF POLYMER-EMULSION ADHESIVE AND INERT FILLERS THAT IS READY TO USE WITHOUT ADDING OTHER MATERIALS.
L. PRIMER: SYSTEM MANUFACTURER'S STANDARD FACTORY-MIXED ELASTOMERIC-POLYMER PRIMER FOR PREPARING BASE-COAT SURFACE FOR APPLICATION OF FINISH COAT.
M. FINISH-COAT MATERIALS: SYSTEM MANUFACTURER'S STANDARD FACTORY-MIXED FORMULATION OF POLYMER-EMULSION BINDER, COLORFAST MINERAL PIGMENTS, SOUND STONE PARTICLES, AND FILLERS AND SILICONE ENHANCED FINISH.
N. WATER: POTABLE.
O. TRIM ACCESSORIES: COMPLYING WITH ASTM C 1063; VINYL PLASTIC.
P. JOINT TAPE: OPEN WEAVE, SELF ADHESIVE, FIBERGLASS MESH, MINIMUM 4 INCHES WIDE.
Q. FLASHING/TERMINATION TAPE: HIGH DENSITY RUBBERIZED ASPHALT/POLYETHYLENE, SELF ADHESIVE MEMBRANE, MINIMUM 4 INCHES WIDE.
R. ELASTOMERIC SEALANTS: LISTED AND RECOMMENDED BY SYSTEM MANUFACTURER; COMPATIBLE WITH JOINT FILLERS, JOINT SUBSTRATES, AND OTHER RELATED MATERIALS; LOW MODULUS SILICONE SEALANT, WITH PRIMER AS REQUIRED AND SUPPLIED BY THE SEALANT MANUFACTURER FOR SURFACES AND MATERIALS, AND COMPLYING WITH REQUIREMENTS IN "EIMA GUIDE FOR USE OF SEALANTS WITH EXTERIOR INSULATION AND FINISH SYSTEMS, CLASS PB" AND IN DIVISION 7 SECTION "JOINT SEALANTS" FOR PRODUCTS INDICATED BELOW. SEALANT COLOR TO MATCH FINISH COAT COLOR OF SYSTEM PER ARCHITECT'S SELECTIONS FROM MANUFACTURER'S FULL RANGE OF STANDARD COLORS.

1.3 EXECUTION
A. EXAMINATION: EXAMINE SUBSTRATES TO DETERMINE IF THE ARE IN SATISFACTORY CONDITION FOR INSULATION OF SYSTEM. DO NOT PROCEED WITH INSTALLATION UNTIL UNSATISFACTORY CONDITIONS HAVE BEEN CORRECTED.
B. PROTECT CONTIGUOUS WORK FROM MOISTURE DETERIORATION AND SOILING RESULTING FROM APPLICATION OF SYSTEMS. PROVIDE TEMPORARY COVERING AND OTHER PROTECTION NEEDED TO PREVENT SPLATTERING OF EXTERIOR FINISH COATINGS ON OTHER WORK.
C. PROTECT SYSTEM, SUBSTRATES, AND WALL CONSTRUCTION BEHIND THEM FROM INCLEMENT WEATHER DURING INSTALLATION. PREVENT INFILTRATION OF MOISTURE BEHIND SYSTEM AND DETERIORATION OF SUBSTRATES.
D. PREPARE AND CLEAN SUBSTRATES TO COMPLY WITH SYSTEM MANUFACTURER'S REQUIREMENTS TO OBTAIN OPTIMUM BOND BETWEEN SUBSTRATE AND ADHESIVE FOR INSULATION.
E. MIXING: COMPLY WITH SYSTEM MANUFACTURER'S REQUIREMENTS FOR COMBINING AND MIXING MATERIALS, DO NOT INTRODUCE ADMIXTURES, WATER, OR OTHER MATERIALS EXCEPT AS APPROVED BY SYSTEM MANUFACTURER. MIX MATERIAL IN CLEAN CONTAINERS. USE MATERIALS WITHIN THE TIME PERIOD SPECIFIED BY SYSTEM MANUFACTURER, OR DISCARD. NO ANTI-FREEZE COMPOUNDS PERMITTED.
F. PRIMER-SEALER: APPLY OVER GYPSUM SHEATHING AND OVER OTHER SUBSTRATES WHERE REQUIRED BY SYSTEM MANUFACTURER FOR IMPROVING ADHESION OR FOR PROTECTING SUBSTRATES FROM DEGRADATION.
G. COMPLY WITH ASTM PS 49 AND SYSTEM MANUFACTURER'S WRITTEN INSTRUCTIONS FOR INSTALLATION OF SYSTEM.
H. APPLY TRIM ACCESSORIES AT PERIMETER OF SYSTEM, AT EXPANSION JOINTS, AND ELSEWHERE, AS INDICATED. USE DRIP SCREED AT BOTTOM EDGE OF SYSTEM AND CASING BEADS AT OTHER LOCATIONS.
I. ADHESIVELY ATTACH INSULATION BY NOTCHED-TROWEL METHOD TO COMPLY WITH ASTM PS 49 AND SYSTEM MANUFACTURER'S WRITTEN REQUIREMENTS. LOCATE JOINTS SO NO PIECE OF INSULATION IS LESS THAN 12 INCHES WIDE OR 6 INCHES HIGH. OFFSET JOINTS NOT LESS THAN 6 INCHES FROM CORNERS OF WINDOW AND DOOR OPENINGS. OFFSET JOINTS OF INSULATION NOT LESS THAN 6 INCHES FROM HORIZONTAL AND 4 INCHES FROM VERTICAL JOINTS IN SHEATHING. INTERRUPT INSULATION FOR EXPANSION JOINTS. FORM JOINTS FOR SEALANT APPLICATION WIDE ENOUGH TO PRODUCE JOINT WIDTHS INDICATED AFTER ENCAPSULATING JOINT SUBSTRATES WITH BASE COAT AND REINFORCING MESH.
1. OFFSET JOINTS OF INSULATION NOT LESS THAN 4 INCHES FROM AESTHETIC REVEALS.
2. INSTALL FOAM SHAPES ATTACHED TO SUPPORTING SUBSTRATE.
3. WRAP EXPOSED EDGES OF INSULATION BOARD WITH REINFORCING MESH FULLY ENCAPSULATED IN BASE COAT AND, EXCEPT WHERE EDGE IS SUBSTRATE FOR JOINT SEALANT, FINISH COAT.
4. TREAT EDGES OF INSULATION BOARD AT TRIM ACCESSORIES BY EXTENDING BASE COAT, REINFORCING MESH, AND FINISH COAT OVER FACE LEG OF ACCESSORIES.
5. COORDINATE FLASHING INSTALLATION WITH INSTALLATION OF INSULATION.
K. INSTALL EXPANSION JOINTS AT LOCATIONS INDICATED, WHERE REQUIRED BY SYSTEM MANUFACTURER; WHERE EXPANSION JOINTS ARE INDICATED IN SUBSTRATES BEHIND EIFS; WHERE EIFS ADJOINS DISSIMILAR SUBSTRATES, MATERIALS, AND CONSTRUCTION; WHERE WALL HEIGHT CHANGES; AND AT FLOOR LINES IN MULTILEVEL WOOD-FRAME CONSTRUCTION.
L. APPLY BASE COAT TO EXPOSED SURFACES OF INSULATION IN MINIMUM THICKNESS RECOMMENDED IN WRITING BY SYSTEM MANUFACTURER, BUT NOT LESS THAN 1/16-INCH DRY-COAT THICKNESS.
M. COMPLETELY EMBED REINFORCING MESH, APPLYING ADDITIONAL BASE-COAT MATERIAL IF NECESSARY, SO REINFORCING-MESH COLOR AND PATTERN ARE NOT VISIBLE, IN SINGLE OR DOUBLE LAYER APPLICATION TO COMPLY WITH ASTM PS 49 AND SYSTEM MANUFACTURER'S WRITTEN REQUIREMENTS. DO NOT APPLY SECOND LAYER UNTIL FIRST BASE COAT LAYER HAS CURED.
N. ADDITIONAL REINFORCING MESH: APPLY STRIP REINFORCING MESH AROUND OPENINGS EXTENDING 4 INCHES BEYOND PERIMETER. APPLY ADDITIONAL 9-BY-12-INCH STRIP REINFORCING MESH DIAGONALLY AT CORNERS OF OPENINGS (RE-ENTRANT CORNERS). APPLY 8-INCH- WIDE STRIP REINFORCING MESH AT BOTH INSIDE AND OUTSIDE CORNERS, UNLESS BASE LAYER OF MESH IS LAPPED NOT LESS THAN 4 INCHES ON EACH SIDE OF CORNERS.
1. AT AESTHETIC REVEALS, APPLY STRIP REINFORCING MESH NOT LESS THAN 8 INCHES (200 MM) WIDE.
2. EMBED STRIP REINFORCING MESH IN BASE COAT BEFORE APPLYING FIRST LAYER OF REINFORCING MESH.
O. SHAPES: FULLY EMBED REINFORCING MESH IN BASE COAT.
P. DOUBLE BASE-COAT APPLICATION: WHERE INDICATED, APPLY SECOND BASE COAT IN THE SAME MANNER AND THICKNESS AS FIRST APPLICATION, EXCEPT WITHOUT REINFORCING MESH. DO NOT APPLY UNTIL FIRST BASE COAT HAS CURED.
Q. APPLY FINISH COAT OVER DRY PRIMER AND BASE COAT, MAINTAINING A WET EDGE AT ALL TIMES FOR UNIFORM APPEARANCE, IN THICKNESS REQUIRED BY SYSTEM MANUFACTURER TO PRODUCE A UNIFORM FINISH OF COLOR AND TEXTURE MATCHING APPROVED SAMPLE.
R. INSTALLATION OF JOINT SEALANTS: PREPARE JOINTS AND APPLY SEALANTS TO COMPLY WITH APPLICABLE REQUIREMENTS IN DIVISION 7 SECTION "JOINT SEALANTS" AND IN "EIMA GUIDE FOR USE OF SEALANTS WITH EXTERIOR INSULATION AND FINISH SYSTEMS, CLASS PB." APPLY JOINT SEALANTS AFTER BASE COAT HAS CURED BUT BEFORE APPLYING FINISH COAT.
S. FIELD QUALITY CONTROL: OWNER WILL ENGAGE A QUALIFIED INDEPENDENT TESTING AND INSPECTING AGENCY TO PERFORM FIELD QUALITY-CONTROL TESTS AND INSPECTIONS AND TO PREPARE TEST REPORTS. CORRECT DEFICIENCIES IN OR REMOVE AND REPLACE EIFS THAT INSPECTIONS AND TEST REPORTS INDICATE DO NOT COMPLY WITH REQUIREMENTS. ADDITIONAL TESTING AND INSPECTING, AT CONTRACTOR'S EXPENSE, WILL BE PERFORMED TO DETERMINE COMPLIANCE OF CORRECTED WORK WITH REQUIREMENTS.

SECTION - 07533 - SINGLE-PLY MEMBRANE ROOFING SYSTEM

SYSTEM PART 1 GENERAL

1.01 SCOPE
A. INSTALL TWO LAYERS OF NEW POLYISOCYANURATE INSULATION. NEW INSULATION MUST BE A MINIMUM OF R-22. INSTALL INSULATION ACCORDING TO ROOF MEMBRANE MANUFACTURER'S SPECIFICATIONS.

B. CONTRACTOR SHALL FURNISH AND INSTALL A WHITE 40 MIL SINGLE-PLY MEMBRANE ROOFING SYSTEM THAT IS FABRICATED OF A WEFT INSERTED LOW-SHRINK, ANTI-WICKING POLYESTER FABRIC AND HAS A THERMOPLASTIC MATERIAL LAMINATED TO BOTH SIDES AS. ROOFING, INC MANUFACTURED BY DURO-LAST

C. ON ALL PARAPET LOCATIONS, WRAP PARAPET WITH NEW PRE-MANUFACTURED PARAPET FLASHINGS BY DURO-LAST ROOFING AND TERMINATE ON EXTERIOR OF WALL. INSTALL NEW METAL COPING CAP, COLOR TO BE CHOSEN BY THE OWNER.

D. ALL DECK SHEETS AND PARAPETS SHOULD BE PULLED TIGHT AND INSTALLED AS WRINKLE FREE AS POSSIBLE.

E. INSTALL PRE-MANUFACTURED FLASHINGS ON ALL ROOF PENETRATIONS AS SPECIFIED BY ROOF MEMBRANE MANUFACTURER.

F. FURNISH AND INSTALL NEW 24" X 24" SAFETY STRIPE WALKPADS AT THE ROOF. DURO-LAST WALK PADS SHOULD BE AROUND ALL SERVICEABLE ROOFTOP UNITS. FASTENING TABS INSTALLED BY COMPLETELY WELDING THE SIX PADS TO THE DECK MEMBRANE WITH A FULL 1/2" WELD TO PREVENT THE WALK FROM DISLODGING.

PAUL DHANENS • ARCHITECT

ARCHITECT

LICENSED ARCHITECT
PAUL DHANENS
NO. C-23843
RENEWAL
STATE OF CALIFORNIA

5100 CALIFORNIA AVE. SUITE 107
BAKERSFIELD, CALIFORNIA 93309
TELEPHONE: (661) 326-8936
FACSIMILE: (661) 326-8937

CONSULTANT

COPYRIGHT

PAUL DHANENS ARCHITECT expressly reserves its copyright and other property rights in these documents which are not to be reproduced, changed or copied in any written, graphic or electronic form, nor assigned to any third party without the expressed written consent of PAUL DHANENS ARCHITECT.

NOTICE TO CONTRACTORS
Written dimensions on these drawings shall take precedence over scaled dimensions. Contractor shall verify and be responsible for confirming all dimensions and shall notify the architect immediately of any descripencies or field variations discovered.

PROJECT

TENANT IMPROVEMENT FOR

1966 WEST AVE L
LANCASTER, CA

DATE	ISSUED FOR
6-28-19	BUILDING DEPT SUBMITTAL

NO.	REVISIONS
1	
2	
3	
4	

SPECIFICATION

FILE NAME: 2366A3-0

SHEET

A-6.1

G. CONTRACTOR MUST DISPOSE OF ALL DEBRIS IN AN APPROVED FACILITY IN ACCORDANCE WITH ALL LOCAL, STATE, AND FEDERAL REGULATIONS.

H. CONTRACTOR TO INSTALL THE MEMBRANE SYSTEM PER ALL LOCAL, STATE AND FEDERAL CODES AND REGULATIONS.

1.02 WARRANTY

A. ROOF TO HAVE DURO-LAST, INC.'S STANDARD WRITTEN FULL ROOFING SYSTEM REPAIR AND/OR REPLACEMENT 15-YEAR WARRANTY AT NO ADDITIONAL WARRANTY SHALL BE A NO-DOLLAR LIMIT THE CHARGE, COVERING MATERIALS AND LABOR. ISSUED BY THE ORIGINAL MANUFACTURER OF THE ROOFING MEMBRANE AND WARRANTY INCLUDE ALL ACCESSORIES SUPPLIED BY THE ROOFING MANUFACTURER. WARRANTY INCLUDES THE REPAIR OR REPLACEMENT OF MEMBRANE AND MATERIALS AND THE COST OF/OR FURNISHING OF LABOR AT THE CONTRACTOR LIST PRICE WHICH IS IN EFFECT AT THE TIME OF REPAIR. WARRANTY SHALL INCLUDE LOSS OF CONSEQUENTIAL DAMAGES DUE TO FAILURE OF THE ROOF SYSTEM AND CONTAIN NO EXCLUSIONS FOR PONDED WATER OR BIOLOGICAL GROWTH. NO PRIVATE LABEL PRODUCTS SHALL BE ACCEPTED. UPON WARRANTY INSPECTION AND ACCEPTANCE OF THE ROOF, THE WARRANTY SHALL BE TURNED OVER TO THE CONTRACTOR BY A DURO-LAST QUALITY ASSURANCE SPECIALIST.

1.03 WEIGHT REQUIREMENTS

A. THE TOTAL WEIGHT OF THE INSTALLED ROOFING SYSTEM INCLUDING ALL ACCESSORIES,I.E.: SCREWS, PLATES, 2-WAY BREATHER VENTS, ETC., SHALL NOT EXCEED 25 POUNDS PER SQUARE FOOT. INSULATION WEIGHT VARIES ACCORDING TO R-VALUE DESIRED.

1.04 SUBMITTALS

A. WRITTEN CONFIRMATION FROM DURO-LAST ROOFING, INC. THAT THE INSTALLER IS AN AUTHORIZED DEALER/CONTRACTOR.

B. SHOP DRAWING SHOWING THE LAYOUT OF THE PREFABRICATED ROOFING PANELS.

C. CONTRACTOR SHALL INFORM THE OWNER PROJECT MANAGER OF ALL TIMELINES, SCHEDULES, AND CONSTRUCTION PROCESSES PRIOR TO WORK COMMENCEMENT.

1.05 PRODUCT DELIVERY, STORAGE, & HANDLING PROCEDURES

A. FOLLOW DURO-LAST, INC.'S INSTRUCTIONS, CAUTIONS, WARNINGS AND PROCEDURES.

B. ROOFING SYSTEM SHALL NOT BE APPLIED WHEN WEATHER CONDITIONS ARE NOT WITHIN THE RANGE ACCEPTABLE UNDER DURO-LAST'S RECOMMENDATIONS.

PART 2 PRODUCT

2.01 ROOF MEMBRANE

A. MEMBRANE COMPONENTS TO BE PRODUCTS OF DURO-LAST ROOFING, INC. NO SUBSTITUTIONS WILL BE ACCEPTED.

B. A SPECIAL FORMULATED, PERMANENT, THERMOPLASTIC ALLOY, BONDED TO A HIGH TENACITY, LOW SHRINKAGE WEFT INSERTED POLYESTER FABRIC WITH RESISTANCE TO ULTRAVIOLET RAYS, MICROORGANISMS AND IMPERVIOUS TO MOST CAUSTIC CHEMICALS, ANIMAL FATS, GREASES AND OILS TYPICALLY FOUND ON A RESTAURANT ROOF.

C. MEMBRANE SHALL BE FACTORY DIELECTRICALLY WELDED INTO PREFABRICATED SHEETS UP TO 2,500 SQUARE FEET OR AS DETERMINED BY JOB CONDITION.

D. THE NEW ROOFING SHALL BE A PREFABRICATED MECHANICALLY FASTENED INSTALLATION OF SINGLE-PLY REINFORCED MEMBRANE, 40 MILS THICK.

E. FIRE RESISTANCE OF THE THERMOPLASTIC ROOFING SYSTEM SHALL MEET UL CLASS A. ALL PACKAGING OF MEMBRANE AND INSULATION SHALL BEAR UL CLASS A LABEL.

F. MEMBRANE SHALL BE WHITE.

G. ALL ROOFING COMPONENTS USED AT ROOF PENETRATIONS SHALL BE PROVIDED BY DURO-LAST ROOFING, INC.

2.02 INSULATION

A. INSTALL TWO LAYERS OF NEW POLYISOCYANURATE INSULATION. NEW INSULATION MUST BE A MINIMUM OF R-38. INSTALL INSULATION ACCORDING ROOF MEMBRANE MANUFACTURER'S SPECIFICATIONS.

2.03 ROOF WALK PADS

A. 24" X 24" SAFETY STRIPE WALK PADS AS MANUFACTURED BY DURO-LAST ROOFING.

PART 3 EXECUTION

3.01 SUBSTRATE INSPECTION

A. INSPECT ALL SURFACES TO RECEIVE ROOFING FOR ANY CONDITION THAT WILL ADVERSELY AFFECT EXECUTION, PERFORMANCE, OR QUALITY OF WORK.

B. ALL ROOF SURFACES AND ALL SLOPED SURFACES TO DRAINS AND OUTLETS SHALL BE CHECKED AND APPROVED BY THE ROOFING CONTRACTOR PRIOR TO THE START OF THE ROOFING WORK.

C. INSTALL ROOFING MATERIAL ONLY UNDER SATISFACTORY CONDITIONS AS SPECIFIED BY THE MEMBRANE MANUFACTURER.

3.02 GENERAL REQUIREMENTS

A. PRECAUTIONS
1. DO NOT LAY OUT OR EXPOSE ANY INSULATION ON THE DECK THAT CANNOT BE COVERED BY MEMBRANE ON THE SAME DAY.
2. IN MAKING ALL FIELD HEAT WELDS, MAKE SURE ALL EDGES ARE CLEAN AND FREE OF TAR, MASTIC OR OTHER FOREIGN ITEMS.
3. DO NOT EXPOSE MEMBRANE AND ACCESSORIES TO A CONSTANT TEMPERATURE IN EXCESS OF 110 DEGREES FAHRENHEIT.
4. SEALANTS AND ADHESIVES SHOULD BE APPLIED ACCORDING TO DURO-LAST, INC.'S SPECIFICATIONS. \
5. START SECURING THE MEMBRANE AT THE HIGHEST POINT AND WORK TOWARDS THE DRAINS.

B. PROTECTION OF ROOFING SURFACES STORING, WHEELING, OR TRUCKING DIRECTLY ON ROOF INSULATION OR MEMBRANE SURFACE IS NOT RECOMMENDED. SMOOTH, CLEAN PLYWOOD OR PLANK WALKWAYS, RUNWAYS AND PLATFORMS SHALL BE PROVIDED AS NECESSARY.

3.03 INSULATION INSTALLATION

A. THE ROOF INSULATION SHALL BE INSTALLED WITH APPROVED FASTENERS AND DISTRIBUTION PLATES PLACED ACCORDING TO THE MANUFACTURER'S MOST RECENT PUBLISHED SPECIFICATIONS FOR THE USE UNDER THE DURO- LAST ROOFING SYSTEM AND FOR ISSUANCE OF THE WARRANTY.

3.04 MEMBRANE INSTALLATION

A. INSTALL THE ROOFING SYSTEM TO DURO-LAST, INC.'S MOST RECENT PUBLISHED SPECIFICATIONS.

3.05 INSPECTION & WARRANTY

A. AFTER THE INSTALLATION IS COMPLETE, A DURO-LAST QUALITY ASSURANCE SPECIALIST SHALL INSPECT THE VISIBLE DETAILS OF THE ROOFING SYSTEM FOR ACCEPTABILITY FOR WARRANTY ISSUANCE ANY DEFICIENCIES SHALL BE CORRECTED BY THE CONTRACTOR AND MADE READY FOR REINSPECTION WITHIN FIVE (5) WORKING DAYS. UPON ACCEPTANCE, THE WARRANTY SHALL BE PROMPTLY ISSUED.

SECTION - 07840 - FIRESTOPPING

A. SUMMARY: FIRESTOPPING MATERIAL FOR PENETRATIONS IN FIRE-RATED CONSTRUCTION.

B. SYSTEM DESCRIPTION:

1. EACH FIRESTOPPING SYSTEM SHALL BE SELECTED TO MAINTAIN FIRE RATING OF THE ASSEMBLY IN WHICH IT USED.

2. FIRESTOPPING SYSTEMS SHALL BE RESILIENT AS NECESSARY TO ACCOMMODATE DIFFERENTIAL MOVEMENT BETWEEN ASSEMBLIES.

C. QUALITY ASSURANCE:

1. PRIOR TO INSTALLATION OF FIRE STOPPING SYSTEMS OBTAIN APPROVAL FROM THE JURISDICTIONAL CODE AUTHORITIES FOR THE FIRE STOPPING SYSTEMS AND APPLICATIONS PROPOSED. NOTIFY THE OWNER / REPRESENTATIVE IF APPROVAL CANNOT BE OBTAINED.

2. FIRESTOPPING: TESTED IN ACCORDANCE WITH ASTM E119, ASTM E814, OR UL 1479 TO MEET THE HOURLY FIRE RATINGS OF THE CONSTRUCTION BEING SEALED. PROVIDE F RATED ASSEMBLIES, EXCEPT WHERE T-RATED ASSEMBLIES ARE REQUIRED BY THE CODE AUTHORITY.

3. FIRESTOPPING SYSTEMS SHALL BE UL LISTED ASSEMBLIES.

D. PRODUCTS:

1. FIRESTOPPING SYSTEMS: SYSTEMS MEETING THE REQUIREMENTS SPECIFIED AND SUITABLE FOR THE CONDITIONS INDICATED.

E. INSTALLATION:

1. PROVIDE FIRESTOPPING AT MECHANICAL, ELECTRICAL, AND PLUMBING PENETRATIONS THROUGH FIRE RATED FLOORS, WALLS, AND CEILINGS, AND OTHER LOCATIONS AS INDICATED ON THE DRAWINGS.

2. INSTALL FIRESTOPPING IN ACCORDANCE WITH THE MANUFACTURER'S RECOMMENDATIONS AND AS NECESSARY TO MEET THE SPECIFIED FIRE RATING REQUIREMENTS.

3. WHERE FIRESTOPPING IS USED TO SEAL AROUND PENETRATIONS THROUGH WATERPROOF MEMBRANES, INSTALL TO MAINTAIN INTEGRITY OF WATERPROOF BARRIER.

4. PATCHING OF HOLES IN EXISTING CONSTRUCTION:

4.1 FILL OPEN HOLES WHICH REMAIN AFTER REMOVAL OF EXISTING MECHANICAL, ELECTRICAL, AND PLUMBING COMPONENTS, PATCH AND REPAIR HOLES AS NECESSARY TO MATCH THE ADJACENT CONSTRUCTION AND TO MAINTAIN THE FIRE RATING OF THE ASSEMBLIES. FIRESTOPPING SYSTEMS MAY BE USED TO FILL HOLES THAT WILL BE CONCEALED IN THE FINISH CONSTRUCTION.

4.2 WHERE FIRESTOPPING SYSTEMS ARE USED TO FILL FLOOR OPENINGS IN OCCUPIED AREAS, PROVIDE MINIMUM 16 GAGE SHEET METAL COVER AS NECESSARY TO SUPPORT FLOOR LOADS AND TO PREVENT DAMAGE TO THE FIRE STOPPING ASSEMBLIES. SECURE SHEET METAL AS NECESSARY TO PREVENT IRREGULARITIES FROM TELEGRAPHING THROUGH THE FLOOR FINISHES OVER THE SHEET METAL.

SECTION - 07850 - FIRE RATED JOINTS

A. SUMMARY:

1. FIRE RATED CONSTRUCTION JOINT ASSEMBLIES IN FIRE-RATED CONSTRUCTION, INCLUDING JOINTS AT THE FOLLOWING LOCATIONS:

1.1 WHERE PARTITION HEADS MEET THE UNDERSIDE OF OVERHEAD FLOOR OR ROOF CONSTRUCTION.

1.2 JOINTS IN FIRE RATED CONCRETE OR MASONRY WALLS.

2. REQUIREMENTS FOR FIRE RATED CONSTRUCTION JOINT ASSEMBLY COMPONENTS PROVIDED IN OTHER SECTIONS.

B. REFERENCES:

1. AMERICAN SOCIETY FOR TESTING AND MATERIALS (ASTM)

1.1 E119 - METHOD FOR FIRE TESTS OF BUILDING CONSTRUCTION AND MATERIALS.

2. UNDERWRITERS LABORATORIES (UL)

2.1 STANDARD 2079 - TESTS FOR FIRE RESISTANCE OF BUILDING JOINT SYSTEMS.

C. SYSTEM DESCRIPTION:

1. EACH FIRE RATED CONSTRUCTION JOINT ASSEMBLY SHALL BE SELECTED TO MAINTAIN FIRE RATING OF THE ASSEMBLY IN WHICH IT USED.

2. EACH FIRE RATED CONSTRUCTION JOINT ASSEMBLY SHALL BE RESILIENT AS NECESSARY TO ACCOMMODATE DIFFERENTIAL MOVEMENT BETWEEN ASSEMBLIES.

D. QUALITY ASSURANCE:

1. FIRE RATED CONSTRUCTION JOINT ASSEMBLIES: SUCCESSFULLY TESTED IN ACCORDANCE WITH ASTM E119, INCLUDING HOSE STREAM TEST, TO MEET THE HOURLY RATING OF THE CONSTRUCTION BEING SEALED.

2. FIRE RATED CONSTRUCTION JOINT ASSEMBLIES AT PARTITION HEADS SHALL HAVE BEEN SUCCESSFULLY TESTED IN ACCORDANCE WITH THE DYNAMIC REQUIREMENTS OF UL 2079, INCLUDING HOSE STREAM TEST, TO MEET THE HOURLY FIRE RATINGS OF THE CONSTRUCTION BEING SEALED.

E. FIRE RATED CONSTRUCTION JOINT ASSEMBLIES:

1. METAL STUD PARTITION HEAD CONSTRUCTION JOINT ASSEMBLY:

1.1 SYSTEM: BASED ON UL ASSEMBLIES LISTED ON THE DRAWINGS.

1.2 FIRE RATED RUNNER: "FIRE TRAK" BY FIRE TRAK CORPORATION, KIMBALL MN (612-398-7800).

1.3 GYPSUM BOARD: AS SPECIFIED IN SECTION 09250.

1.4 FILL, VOID, OR CAVITY MATERIAL: AS LISTED IN THE FIRE RATED ASSEMBLY .

F. INSTALLATION:

1. INSTALL CONSTRUCTION JOINT ASSEMBLIES IN ACCORDANCE WITH THE FIRE RATED ASSEMBLIES LISTED, AND AS NECESSARY TO MEET THE SPECIFIC FIRE RATING REQUIREMENTS.

2. COORDINATE INSTALLATION OF INTEGRAL COMPONENTS AS NECESSARY TO ENSURE THE FIRE RATING OF THE ASSEMBLIES.

SECTION - 07920 - JOINT SEALANTS

A. QUALITY ASSURANCE: USE ONLY SKILLED INSTALLERS SPECIALLY TRAINED IN THE TECHNIQUES OF SEALING, AND FAMILIAR WITH THE PUBLISHED RECOMMENDATIONS OF THE MANUFACTURERS OF THE SEALANTS BEING USED.

B. SEALANTS:

1. TYPE S - NEUTRAL CURE SILICONE SEALANTS:

1.1 DOW CORNING, 790 SILICONE BUILDING SEALANT, OR 795 SILICONE STRUCTURAL GLAZING AND WEATHERPROOFING SEALANT.

1.2 PECORA, 890 ARCHITECTURAL SILICONE SEALANT.

2. TYPE PTNS: ASTM C920, TYPE M, GRADE NS, CLASS 25; PECORA "DYNATRED," TREMCO "HPL," OR APPROVED; CUSTOM COLORS TO MATCH ADJACENT GROUT COLOR.

3. TYPE A: ASTM C834; TREMCO "ACRYLIC LATEX CAULK", PECORA "AC-20", SONNEBORN "SONOLAC" OR APPROVED.

4. TYPE SM: MILDEW RESISTANT SILICONE SEALANT: USDA APPROVED; DOW CORNING 786 BY DOW CHEMICAL, GE SANITARY SEALANT OR APPROVED; CLEAR.

5. TYPE SG: SILL GASKET: DOW STYROFOAM SILL SEAL FOAM GASKET

C. ACCESSORY MATERIALS:

1. PRIMER: NON-STAINING TYPE, RECOMMENDED BY SEALANT MANUFACTURER TO SUIT APPLICATION.

2. JOINT CLEANER: NON-CORROSIVE AND NON-STAINING TYPE, RECOMMENDED BY SEALANT MANUFACTURER; COMPATIBLE WITH JOINT FORMING MATERIALS.

3. JOINT FILLER: CLOSED CELL POLYETHYLENE FOAM; ROUND PROFILE; THICKNESS: 130% OF JOINT WIDTH.

4. BOND BREAKER: PRESSURE SENSITIVE TAPE RECOMMENDED BY SEALANT MANUFACTURER TO SUIT APPLICATION.

D. PREPARATION:

1. CLEAN AND PREPARE JOINTS IN ACCORDANCE WITH MANUFACTURER'S INSTRUCTIONS. REMOVE LOOSE MATERIALS AND OTHER FOREIGN MATTER THAT MIGHT IMPAIR ADHESION OF SEALANT.

2. APPLY MASKING TIGHTLY AROUND JOINTS TO PROTECT ADJACENT SURFACES FROM EXCESS SEALANT.

3. PRIME AS REQUIRED FOR PROPER BOND TO SUBSTRATE MATERIALS.

4. PLACE BACKING MATERIALS TO ACHIEVE PROPER SEALANT WIDTH/DEPTH RATIOS. USE BOND BREAKER WHERE REQUIRED.

E. INSTALLATION:

1. PERFORM WORK IN ACCORDANCE WITH ASTM C1193, UNLESS SPECIFIED OTHERWISE OR RECOMMENDED OTHERWISE BY THE SEALANT MANUFACTURER.

2. SEALANT BEADS SHALL HAVE A SECTIONAL WIDTH TO DEPTH RATIO OF 2 TO 1.

3. INSTALL TYPE PTNS SEALANT FULL DEPTH IN TILE EXPANSION JOINTS WITH NO BACKER ROD.

4. TOOL JOINTS CONCAVE, UNLESS INDICATED OTHERWISE. FINISH FREE OF AIR POCKETS, FOREIGN EMBEDDED MATTER, RIDGES, AND SAGS.

F. PROTECT SEALANT IN JOINTS SUBJECT TO DIRT, MOISTURE, AND TRAFFIC DURING THE SEALANT CURING PROCESS. PROTECTION SHALL BE ABLE TO RESIST TRAFFIC WHILE REMAINING SECURELY IN POSITION.

G. SCHEDULE:

1. TYPE S: PROVIDE AT ALL EXTERIOR JOINTS; STANDARD COLORS AS SELECTED BY OWNER / REPRESENTATIVE.

2. TYPE PTNS: PROVIDE AT ALL EXPANSION JOINTS IN STONE AND TILE; CUSTOM COLORS TO MATCH GROUT SAMPLES SUBMITTED BY THE TILE INSTALLER.

3. TYPE A: PROVIDE AT ALL INTERIOR JOINTS, UNLESS SPECIFIED OTHERWISE; STANDARD COLORS TO MATCH ADJACENT CONSTRUCTION.

4. TYPE SM: PROVIDE AT JOINTS AROUND COUNTER

5. TYPE SG: PROVIDE AT ALL LOCATIONS WHERE A WOOD SILL PLATE OCCURS OVER A CEMENT OR MASONRY SURFACE.

SECTION 08100 - METAL DOORS AND FRAMES

A. FIRE LABELS:

PROVIDE UNDERWRITERS' LABELS ON DOORS AND FRAMES WHERE, AND OF CLASS INDICATED.

B. REFERENCE STANDARDS:

1. STEEL DOOR INSTITUTE:

SDH00 RECOMMENDED SPECIFICATIONS FOR STANDARD STEEL DOORS AND FRAMES.

2. NATIONAL ASSOCIATION OF ARCHITECTURAL METAL MANUFACTURERS

NAAMM-CHMI SPECIFICATIONS FOR CUSTOM HOLLOW METAL DOORS AND FRAMES

3. AMERICAN SOCIETY FOR TESTING AND MATERIALS:

ASTM A366 SPECIFICATION OF STEEL, CARBON, COLD-ROLLED SHEET QUALITY COMMERCIAL.

C. MATERIALS:

1. CONFORM TO NAAMM, PAGES 3 THROUGH 6. CONFORM TO NAAMM FOR LABELED CONSTRUCTION

2. ZINC-COAT ANY EXTERIOR DOORS, AND DOOR FRAMES, WHEN APPLICABLE STANDARD.

3. SOUND DEADENING: MANUFACTURER'S STANDARD INORGANIC NON COMBUSTIBLE INSULATION.

4. ANCHORS FASTENERS, AND ACCESSORIES: MANUFACTURER'S

D. STEEL DOOR FRAME FABRICATION AND MANUFACTURER:

KNOCK DOWN FRAMES: PROVIDE STANDARD TYPE, KNOCKED-DOWN FRAMES DESIGNED TO BE SECURELY INSTALLED IN THE ROUGH OPENING AFTER FINISH WALL MATERIAL IS APPLIED

E. PREPARATION OF FINISH HARDWARE:

1. WORK TO TEMPLATES FOR ALL HARDWARE. CONFORM TO STANDARDS OF HARDWARE MANUFACTURER

F. INSTALLATION:

1. CONFORM TO NAAMM, PAGE 6, PART 3

2. KNOCK-DOWN FRAMES: FILL FRAME MITER WITH APPROVED FILLER, AND SMOOTH AND PRIME.

SECTION - 0815 - HOLLOW METAL DOORS AND FRAMES

A. SUMMARY: HOLLOW STEEL DOORS AND FRAMES.

B. REFERENCES:

1. NATIONAL FIRE PROTECTION ASSOCIATION (NFPA): NFPA 80 - FIRE DOORS AND WINDOWS.

2. STEEL DOOR INSTITUTE (SDI):

2.1 SDH00 - STANDARD STEEL DOORS AND FRAMES.

2.2 SDH05 - RECOMMENDED ERECTION INSTRUCTIONS FOR STEEL FRAMES.

3. AMERICAN SOCIETY FOR TESTING AND MATERIALS (ASTM)

3.1 A366 - SPECIFICATION FOR STEEL, CARBON, COLD ROLLED SHEET, COMMERCIAL QUALITY.

3.2 A569 - SPECIFICATION FOR STEEL, CARBON (0.15 MAXIMUM PERCENT), HOT ROLLED SHEET AND STRIP, COMMERCIAL QUALITY.

C. QUALITY ASSURANCE:

1. CONFORM TO REQUIREMENTS OF SDH00.

2. REGULATORY REQUIREMENTS:

2.1 INSTALLED FRAME AND DOOR ASSEMBLY SHALL CONFORM TO NFPA 80 FOR FIRE RATED CLASS INDICATED.

2.2 WHERE DOORS ARE NOTED WITH AN HOURLY FIRE RESISTANCE RATING, PROVIDE DOOR AND FRAME ASSEMBLIES LABELED BY UNDERWRITER'S LABORATORY OR ANY OTHER TESTING LABORATORY APPROVED BY THE LOCAL CODE AUTHORITIES, TO MEET THE HOURLY FIRE RATING NOTED. ASSEMBLIES SHALL MEET JURISDICTIONAL REQUIREMENTS FOR POSITIVE PRESSURE.

2.3 WHERE A HOLLOW METAL FRAME IS USED AS A GLAZED OPENING IN AN INTERIOR FIRE RATED WALL ASSEMBLY, THE FRAME SHALL BE LABELED TO MATCH THE FIRE RATING REQUIRED FOR A DOOR ASSEMBLY IN THE FIRE RATED WALL, EXCEPT IN A 1 HOUR FIRE RATED CORRIDOR WALL ASSEMBLY, THE GLAZED FRAME SHALL BE LABELED TO A 45 MINUTE RATING. IN A 1-HOUR FIRE RATED CORRIDOR WALL ASSEMBLY, WHERE THE DOOR FRAME IS INTEGRAL WITH THE GLAZED FRAME, THE FRAME SHALL HAVE A 45 MIN. RATING.

3. INCLUDE "S" LABEL ON FIRE RATED DOOR ASSEMBLIES WHICH ARE LOCATED AT 1 HOUR RATED EXIT CORRIDORS WHEN REQUIRED BY LOCAL JURISDICTION.

4. MEMBERS OF THE STEEL DOOR INSTITUTE AND OF THE NATIONAL ASSOCIATION OF ARCHITECTURAL METAL MANUFACTURER'S, SUBJECT TO COMPLIANCE WITH THE SPECIFIED REQUIREMENTS.

D. MATERIALS:

3. STEEL SHEET: COLD ROLLED ASTM A366, OR HOT ROLLED PICKLED AND OILED SHEET CONFORMING TO ASTM A569.

E. DOORS:

1. SDH00, SEAMLESS DESIGN.

2. MINIMUM 18-GAGE FACE SHEETS FOR INTERIOR DOORS; MINIMUM 16 GAGE FACE SHEETS FOR EXTERIOR DOORS.

3. CORE:

3.1 INTERIOR DOORS: VERTICAL STEEL STIFFENERS WITH SOUND DEADENING FILL BETWEEN STIFFENERS, OR RESIN IMPREGNATED KRAFT PAPER HONEYCOMB CORE.

3.2 EXTERIOR DOORS: POLYSTYRENE OR POLYURETHANE FOAM CORE.

4. PROVIDE CONTINUOUSLY WELDED SEAMLESS EDGES. NO PLASTIC FILLERS WILL BE ACCEPTED.

F. FULLY WELDED FRAMES:

1. DESIGN: DOUBLE RABBET, UNLESS INDICATED OTHERWISE; FULLY WELDED.

2. EXTERIOR FRAMES: MINIMUM 14 GAGE.

3. INTERIOR FRAMES: MINIMUM 16 GAGE FOR FRAMES OF DOOR OPENINGS UP TO AND INCLUDING 4 FEET IN WIDTH; 14 GAGE FOR FRAMES GREATER THAN 4 FEET IN WIDTH.

4. PROVIDE EXTENDED RETURN LEG AT EXTERIOR OPENINGS AS INDICATED TO SUPPORT SEALANT SYSTEMS.

G. FABRICATION:

1. SHOP-FABRICATE UNITS TO ACCOMMODATE THE HARDWARE SPECIFIED IN SECTION 08710.

2. FABRICATE FRAMES AND DOORS WITH HARDWARE REINFORCEMENT PLATES WELDED IN PLACE. REINFORCE FOR BUTTS, CLOSERS, AND OTHER SIMILAR MOVING HARDWARE ITEMS. REINFORCING SHALL BE MINIMUM 3/16-INCH STEEL PLATE. REINFORCE EACH BUTT WITH MINIMUM 10-1/2 X 1-1/2 INCH PLATE ON HINGE SIDES OF BOTH DOOR AND FRAME. REINFORCE FOR CLOSERS THE FULL WIDTH OF THE DOOR.

3. REINFORCE FRAMES WIDER THAN 48 INCHES WITH ROLL FORMED STEEL CHANNELS FITTED TIGHTLY INTO FRAME HEAD, FLUSH WITH TOP.

4. CLOSE TOP AND BOTTOM EDGES OF DOORS WITH STEEL CHANNEL MINIMUM 16-GAUGE EXTENDING FULL WIDTH OF DOOR, SPOT-WELDED TO BOTH FACES. CLOSE TOP EDGES OF EXTERIOR DOORS FLUSH WITH STEEL FILLER CAP; SEAL JOINTS WATERTIGHT.

5. FINISH AT EXTERIOR UNITS: MODIFIED EPOXY ESTER BAKED-ON PRIMER TO RECEIVE URETHANE COATING SPECIFIED IN SECTION 09900; OR "SERIES 69 EPOXOLINE II," BY TNEMEC, OR SERIES 888" BY CARBOLINE.

6. PROVIDE METAL RAIN HOOD FOR EXTERIOR DOOR FRAMES.

7. ATTACH FIRE RATED LABEL TO EACH FRAME AND DOOR UNIT.

H. INSTALLATION OF WELDED FRAMES:

1. INSTALL FRAMES IN ACCORDANCE WITH SDH05 AND IN ACCORDANCE WITH LABELING REQUIREMENTS.

2. COORDINATE WITH WALL CONSTRUCTION FOR ANCHOR PLACEMENT.

3. INSTALL ACCESSORIES.

4. INSTALLATION TOLERANCES:

4.1 MAXIMUM DIAGONAL DISTORTION: 1/16 INCH MEASURED WITH STRAIGHT EDGE, CORNER TO CORNER.

4.2 INSTALL DOORS PLUMB AND LEVEL TO 1/16 INCH IN 7 FEET.

I. DOOR INSTALLATION:

1. FIT AND PREPARE DOORS FOR INSTALLATION IN ACCORDANCE WITH THE DOOR MANUFACTURER'S PRINTED INSTRUCTIONS.

2. INSTALL DOORS PLUMB AND SQUARE.

3. FABRICATE FOR 1/8 INCH CLEARANCE AT HEAD AND EACH JAMB, 1/8 INCH BETWEEN PAIRS OF DOORS, 3/8 INCH CLEARANCE FROM HARD SURFACE FINISH FLOOR, 3/4 INCH FROM HARD SURFACE BENEATH DOORS AT OPENINGS INDICATED TO RECEIVE CARPETING, AND 3/16 INCH CLEARANCE ABOVE TOP OF THRESHOLD.

4. INSTALL ROSES, KICK PLATES, CLOSERS, AND OTHER SURFACE MOUNTED HARDWARE ONLY AFTER DOOR FINISHING IS COMPLETE AND FINISHES ARE COMPLETELY CURED.

5. FIT HOLLOW METAL DOORS IN ACCORDANCE WITH SDI 100.

6. DOOR AND HARDWARE INSTALLATION IS SPECIFIED IN SECTION 08710.

SECTION 08210 - WOOD DOORS

A. DESCRIPTION OF SYSTEMS:
REFER TO "DOOR SCHEDULE" FOR DOOR SPECIFICATION.

B. CODES AND STANDARDS:

SECTION - 08305 - ACCESS DOORS

A. ACCEPTABLE MANUFACTURERS:

1. ACCESS PANEL SOLUTIONS (877) 592-0033

B. DOOR TYPES:

1. NON RATED CONCEALED DRYWALL ACCESS DOOR:

1.1 RECESSED TYPE DESIGN.

1.2 GLASS FIBER REINFORCED PANEL

1.3 INTEGRAL ATTACHMENT FLANGE AND DRYWALL BEAD FOR FLUSH INSTALLATION.

1.4 FULLY CONCEALED PIVOT ROD HINGE.

1.5 LATCHES: SCREWDRIVER OPERATED CAM LATCH.

C. MINIMUM SIZES: PROVIDE ACCESS DOORS IN SIZES INDICATED. WHEN NOT INDICATED PROVIDE 12" X 12" SIZE FOR HAND ACCESS, AND 24" x 24" SIZE FOR MAN ENTRY.

D. INSTALLATION:

1. PROVIDE ACCESS DOORS IN THE LOCATIONS INDICATED, AND FOR ACCESS TO BALANCING AND FIRE DAMPERS, TRAP PRIMERS, VALVES, FANS, TERMINAL UNITS, AND OTHER EQUIPMENT REQUIRING PERIODIC INSPECTION OR MAINTENANCE THROUGH FINISHED WALLS OR CEILING, WHETHER INDICATED OR NOT.

2. COORDINATE ACCESS REQUIREMENTS WITH OTHER TRADES AND LANDLORD.

SECTION - 08415 - ALUMINUM STOREFRONTS AND ENTRANCES

A. SUMMARY:

1. EXTERIOR ALUMINUM FRAMED WINDOW SYSTEMS.

B. REFERENCES:

1. AMERICAN SOCIETY FOR TESTING AND MATERIALS (ASTM):

1.1 B209 - ALUMINUM AND ALUMINUM ALLOY SHEET AND PLATE.

1.2 B221 - ALUMINUM ALLOY EXTRUDED BARS, RODS, WIRE, SHAPES, AND TUBES.

1.3 E283 - RATE OF AIR LEAKAGE THROUGH EXTERIOR WINDOWS, CURTAIN WALLS, AND DOORS.

1.4 E330 - STRUCTURAL PERFORMANCE OF EXTERIOR WINDOWS, CURTAIN WALLS, AND DOORS BY UNIFORM STATIC AIR PRESSURE DIFFERENCE.

2. ARCHITECTURAL ALUMINUM MANUFACTURER'S ASSOCIATION (AAMA).

C. SYSTEM DESCRIPTION:

1. PERFORMANCE - EXTERIOR ALUMINUM WINDOW AND STOREFRONT SYSTEM:

1.1 SYSTEM SHALL ACCOMMODATE EXPANSION AND CONTRACTION CAUSED BY A TEMPERATURE RANGE OF 0 DEGREES F. TO 180 DEGREES F. WITHOUT DETRIMENTAL EFFECTS TO COMPONENTS, SEALING SYSTEMS, AND SURROUNDING CONSTRUCTION. (AAMA 501.5-98)

1.2 DESIGN SYSTEM WITH PROVISIONS TO DRAIN MOISTURE TO THE EXTERIOR OF THE SYSTEM.

1.3 AIR INFILTRATION: SHALL NOT EXCEED .05 CFM PR SQUARE FOOT OF FIXED AREA WHEN TESTED IN ACCORDANCE WITH ASTM E283 AT 6.24 PSF.

1.4 WATER INFILTRATION: NO WATER PENETRATION WHEN MEASURED IN ACCORDANCE WITH ASTM E331 AT (15) PSF AND WITH AAMA 501-94 AT (15) PSF.

2. WINDOW AND STOREFRONT STRUCTURAL DESIGN:

2.1 DESIGN AND SIZE MEMBERS TO WITHSTAND POSITIVE AND NEGATIVE WIND LOADS AS REQUIRED BY THE LOCAL JURISDICTIONAL AUTHORITY.

2.2 LIMIT MULLION DEFLECTION TO 1/175, OR FLEXURE LIMIT OF (3/4") GLASS WITH FULL RECOVERY OF GLAZING MATERIALS, WHICHEVER IS LESS. (ASTM E-330)

D. WARRANTY: FURNISH FIVE YEAR WRITTEN WARRANTY EXECUTED TO THE OWNER, FROM THE MANUFACTURER OF THE STOREFRONT SYSTEM, AGAINST DEFECTS IN MATERIALS AND WORKMANSHIP, IN ACCORDANCE WITH SECTION 01770.

E. MATERIALS:

1. EXTRUDED ALUMINUM: ASTM B221; 6063 T5 ALLOY AND TEMPER.

2. SHEET ALUMINUM: ASTM B209; 5005-H32 ALLOY, OR APPROVED.

F. COMPONENTS:

1. ACCEPTABLE MANUFACTURERS:
1.1 AMWELD BUILDING PRODUCTS DIVISION
1.2 CECO
1.3 CURRIES
1.4 MESKER
1.5 STEEL CRAFT, BY AMERICAN STANDARD

2. DOORS: BY MANUFACTURER

3. STOREFRONT AND WINDOW FRAMING:

3.1 WHERE RECONFIGURATION OF EXISTING FRAMING IS SHOWN, MATCH DIMENSIONS, PROFILE, GLAZING THICKNESS AND FINISH OF EXISTING ALUMINUM WINDOW FRAMING.

3.2 PROVIDE THERMALLY BROKEN OR THERMALLY IMPROVED ASSEMBLIES AT ALL EXTERIOR SYSTEMS.

4. GLAZING BEADS: MANUFACTURER'S STANDARD EPDM OR NEOPRENE GLAZING BEADS, FOR A COMPLETE WEATHERPROOF SEAL. FURNISH FOR INSTALLATION AS A PART OF THE WORK OF SECTION 08800.

5. FLEXIBLE FLASHING:

5.1 W.R. GRACE "VYCOR PLUS".

5.2 MONSEY BAKOR "BLUESKIN" 40 MIL THICKNESS.

5.3 DUPONT COMPANY "TYVEK FLEXWRAP"

G. FABRICATION:

1. FABRICATE FRAMES ALLOWING FOR SHIM SPACING AROUND PERIMETER OF ASSEMBLY, YET ENABLING INSTALLATION.

2. RIGIDLY FIT JOINTS AND CORNERS. ACCURATELY FIT AND SECURE CORNERS TIGHT. MAKE CORNER JOINTS FLUSH, HAIRLINE, AND WEATHERPROOF. SEAL JOINTS WITH SEALANT.

3. PROVIDE DRAINAGE HOLES TO ALLOW WATER TO FLOW TO EXTERIOR.

4. PREPARE COMPONENTS TO RECEIVE ANCHORAGE DEVICES. FABRICATE ANCHORAGE ITEMS.

5. PROVIDE INTERNAL REINFORCEMENT IN MULLIONS WITH MEMBERS TO MAINTAIN RIGIDITY. PROVIDE REINFORCING AT ALL DOOR STRIKE JAMBS

6. FABRICATE STOREFRONT SYSTEM TO ACCOMMODATE HARDWARE USING TEMPLATES FURNISHED FROM SECTION 08710.

7. FABRICATE CUSTOM EXTRUSIONS, CLOSURES, AND SHEET MATERIALS TO THE SHAPES INDICATED; FABRICATE FOR ATTACHMENT WITH CONCEALED FASTENERS TO THE GREATEST POSSIBLE EXTENT.

8. FINISH: FLUOROPOLYMER TWO-COAT SYSTEM AS FOLLOWS:

8.1 MANUFACTURER'S STANDARD TWO-COAT, THERMOCURED SYSTEM CONSISTING OF SPECIALLY FORMULATED INHIBITIVE PRIMER AND FLUOROPOLYMER COLOR TOPCOAT CONTAINING NOT LESS THAN 70 PERCENT POLYVINYLIDENE FLUORIDE RESIN BY WEIGHT; COMPLYING WITH AAMA 2605.

8.2 COLOR: REFER TO FINISH SCHEDULE

8.3 TOUCH-UP: FURNISH MANUFACTURER'S STANDARD COMPATIBLE COLOR MATCHED AIR-DRY SYSTEM FOR TOUCH-UP AFTER INSTALLATION.

PAUL DHANENS • ARCHITECT

ARCHITECT

LICENSED ARCHITECT
PAUL DHANENS
NO. C-23843
RENEWAL
STATE OF CALIFORNIA

5100 CALIFORNIA AVE. SUITE 107
BAKERSFIELD, CALIFORNIA 93309
TELEPHONE: (661) 326-8936
FACSIMILE: (661) 326-8937

CONSULTANT

COPYRIGHT

PAUL DHANENS ARCHITECT expressly reserves its copyright and other property rights in these documents which are not to be reproduced, changed or copied in any written, graphic or electronic form, nor assigned to any third party without the expressed written consent of PAUL DHANENS ARCHITECT.

NOTICE TO CONTRACTORS
Written dimensions on these drawings shall take precedence over scaled dimensions. Contractor shall verify and be responsible for confirming all dimensions and shall notify the architect immediately of any descripencies or field variations discovered.

PROJECT

TENANT IMPROVEMENT FOR

Steak 'n Shake — FAMOUS FOR STEAKBURGERS

1966 WEST AVE L
LANCASTER, CA

DATE	ISSUED FOR
6-28-19	BUILDING DEPT SUBMITTAL

NO.	REVISIONS
1	
2	
3	
4	

SPECIFICATION

FILE NAME: 2366A6-0

SHEET

A-6.2

H. INSTALLATION

1. INSTALL FRAMES AND HARDWARE IN ACCORDANCE WITH MANUFACTURER'S INSTRUCTIONS.

2. USE ANCHORAGE DEVICES TO SECURELY ATTACH FRAME TO STRUCTURE.

3. ALIGN FRAMES PLUMB AND LEVEL, FREE OF WARP OR TWIST. MAINTAIN DIMENSIONAL TOLERANCES, ALIGNING WITH ADJACENT WORK.

4. SUB-SILLS AT EXTERIOR FRAMING:

4.1. PROVIDE EXTRUDED ALUMINUM SUB-SILLS IN ACCORDANCE WITH MANUFACTURER / INSTALLATION INSTRUCTIONS AND AS SPECIFIED BELOW.

4.2. PROVIDE MANUFACTURER / STANDARD END DAMS AND SPLICE PLATES SEALED INTO POSITION. END DAMS AND SPLICE PLATES SHALL MATCH THE HEIGHT OF THE SUB-SILL BACK.

4.3. SEAL JOINT BETWEEN END DAM AND JAMB.

4.4. FASTEN THE SUB-SILL SECURELY TO THE SILL CONSTRUCTION. CAP SEAL TOPS OF FASTENERS.

4.5. FASTEN THE STOREFRONT FRAMING INTO THE SUB-SILL. USE MANUFACTURER / STANDARD INTERLOCKING ANCHORS WHICH ENGAGE THE SUB-SILL AND ALLOW FASTENING OF THE STOREFRONT WITHOUT PENETRATING THE HORIZONTAL PAN OF THE SUB-SILL.

4.6. PROVIDE FLEXIBLE FLASHING OVER END DAMS. INTEGRATE WITH BUILDING PAPER SYSTEMS PROVIDED UNDER OTHER SECTIONS.

5. INSTALL WATER DIVERTERS AT EXTERIOR FRAMING.

6. COMPENSATION HEADS

6.1. PROVIDE COMPENSATION CHANNELS AT HEAD CONDITIONS IN ACCORDANCE WITH MANUFACTURER / INSTALLATION INSTRUCTIONS AND AS SPECIFIED BELOW.

6.2. PROVIDE MANUFACTURER / STANDARD END CAPS SEALED INTO POSITION. END CAPS SHALL MATCH THE HEIGHT OF THE COMPENSATION CHANNEL AND SHALL BE PRE-FINISHED TO MATCH THE FRAMING AT EXPOSED LOCATIONS.

6.3. PROVIDE INTERLOCKING MULLION ANCHORS AT VERTICAL TUBES.

7. PROVIDE PLASTIC BACKING PLATES AT JAMBS TO RECEIVE SEALANT AND BACKING ROD.

8. PERIMETER SEALANT IS PROVIDED UNDER SECTION 07920.

9. ADJUST HARDWARE INSTALLED IN THIS SECTION FOR SMOOTH OPERATION.

10. ISOLATE ALUMINUM FROM DISSIMILAR MATERIALS. KEEP ISOLATION MATERIALS UNEXPOSED TO VIEW.

SECTION - 08710 - DOOR HARDWARE

A. SUPPLIER: FINISH HARDWARE SHALL BE SUPPLIED BY RECOGNIZED BUILDERS' HARDWARE SUPPLIER WHO HAS BEEN FURNISHING HARDWARE IN THE SAME AREA AS THE PROJECT FOR A PERIOD OF NOT LESS THAN TWO YEARS. THE SUPPLIER'S ORGANIZATION SHALL INCLUDE A MEMBER OF THE AMERICAN SOCIETY OF ARCHITECTURAL HARDWARE CONSULTANTS WHO IS AVAILABLE AT ALL REASONABLE TIMES DURING THE COURSE OF THE WORK TO MEET WITH THE OWNER, OWNER / REPRESENTATIVE, OR CONTRACTOR FOR PROJECT HARDWARE CONSULTATION.

B. INSTALLER: FINISH HARDWARE SHALL BE INSTALLED ONLY BY EXPERIENCED TRADESMEN IN COMPLIANCE WITH TRADE UNION JURISDICTIONS, EITHER AT THE DOOR AND FRAME FABRICATION PLANT OR AT THE PROJECT SITE.

C. CODES:

1. ALL FINISH HARDWARE SHALL COMPLY WITH APPLICABLE LOCAL AND/OR STATE CURRENT BUILDING CODES.

2. HARDWARE FOR FIRE-RATED OPENINGS SHALL ALSO BE IN COMPLIANCE WITH ALL FIRE AND BUILDING CODES APPLICABLE TO THE DISTRICT IN WHICH THE BUILDING IS LOCATED. PROVIDE ONLY HARDWARE WHICH HAS BEEN TESTED AND LISTED BY UL FOR THE TYPES AND SIZES OF DOORS REQUIRED, AND WHICH COMPLIES WITH THE REQUIREMENTS OF THE DOOR AND DOOR FRAME LABELS.

3. PROVIDE SMOKE SEALS AS REQUIRED AT EACH FIRE-RATED OPENING.

D. DELIVERY: DELIVER ALL HARDWARE IN MANUFACTURERS' ORIGINAL UNOPENED UNDAMAGED PACKAGES, CLEARLY IDENTIFYING MANUFACTURER, BRAND NAME & CONTENTS.

E. IN ADDITION TO REQUIRED ONE-YEAR WARRANTY UNDER CONDITIONS OF THE CONTRACT, FURNISH 5-YEAR UNCONDITIONAL GUARANTEES FOR ALL DOOR CLOSERS, UNDER PROVISIONS OF SECTION 01700.

F. FACTORY REPRESENTATIVES FOR DOOR CLOSERS, EXIT BOLTS, AND LOCKSETS SHALL BE AVAILABLE DURING THE CONSTRUCTION TO INSTRUCT THE CONTRACTOR ON THE PROPER METHOD OF INSTALLATION OF THEIR MATERIALS. THEY SHALL INSPECT AND ADJUST THEIR MATERIALS AT THE COMPLETION OF THE WORK, AND SUPPLY PROPER MAINTENANCE MANUALS TO THE OWNER.

G. FURNISH 2 SETS OF SPECIAL TOOLS FOR INSTALLATION AND MAINTENANCE OF HARDWARE. TOOLS FOR MAINTENANCE AND ADJUSTMENTS ARE TO BE DELIVERED TO THE OWNER UPON COMPLETION OF THE WORK.

H. IN GENERAL, UNLESS OTHERWISE INDICATED, FINISHES SHALL BE AS FOLLOWS:

1. SATIN STAINLESS US32D

I. GENERAL: CONSTRUCTION MASTERKEY ALL LOCKSETS AND CYLINDER ITEMS; PROVIDE 6 CONSTRUCTION MASTERKEYS.

J. KEYING: CONTRACTOR SHALL BE RESPONSIBLE FOR FINAL KEYING, AS FOLLOWS:

1. CONSULT WITH OWNER / AUTHORIZED REPRESENTATIVE AND PREPARE DETAILED KEYING SCHEDULE ACCORDINGLY. OWNER'S REPRESENTATIVE WILL COORDINATE KEYING REQUIREMENTS WITH AUTHORIZED REPRESENTATIVE OF HARDWARE SUPPLIER.

2. ALL LOCKS AND LOCKSETS SHALL ACCOMMODATE "BEST" 7-PIN KEYING SYSTEM.

3. STAMP "DO NOT DUPLICATE" ON ALL KEYS.

K. HARDWARE:

1. HARDWARE IS SCHEDULED ON THE DRAWINGS.

2. COMPLY WITH REQUIREMENTS INDICATED BELOW.

L. BUTTS:

1. PROVIDE BUTTS ON EXTERIOR DOORS WITH NON-REMOVABLE PINS (SET SCREW IN BARREL, PIN NON REMOVABLE WHEN DOOR IS CLOSED), AND SAFETY STUD.

2. PROVIDE FULL THREADED WOOD SCREWS FOR WOOD DOORS AND/OR JAMBS.

3. BUTT WIDTHS LISTED ARE MINIMUM. PROVIDE BUTTS OF WIDER THROW TO SUIT CONDITIONS FOR 180 DEGREE OPERATION OF DOORS, STRUCTURAL CONDITIONS PENDING.

M. LOCKSETS, DEADLOCKS, CYLINDERS AND PADLOCKS:

1. PROVIDE NEW CYLINDER AT EACH EXISTING DOOR THAT HAS DEADLOCK OR LOCKSET.

2. PROVIDE LOCK STRIKES WITH MINIMUM PROJECTION TO PROTECT TRIM.

3. PROVIDE WROUGHT BOXES FOR LOCKSETS AND DEADLOCKS.

4. PROVIDE DEADLOCKS WITH ARMORED FRONTS.

5. FUNCTION AS INDICATED IN HARDWARE GROUPS.

6. DEAD BOLTS AT EXTERIOR DOORS SHALL HAVE A MINIMUM THROW OF 1 INCH AND MINIMUM EMBEDMENT OF 3/4 INCH.

N. DOOR CLOSERS:

1. ALL OVERHEAD CLOSERS TO BE MOUNTED ON INTERIOR SIDE OF DOOR, NO THRU BOLTS.

2. PROVIDE MOUNTING BRACKETS AND PROPER LENGTH ARMS TO SUIT ALL CONDITIONS. PROVIDE ARM OPTIONS AS SCHEDULED OR RECOMMENDED BY MANUFACTURER.

3. SIZES SHALL BE AS RECOMMENDED BY THE MANUFACTURER. CLOSERS SHALL HAVE A 5-YEAR UNCONDITIONAL GUARANTEE. FINISH SHALL MATCH LOCKSETS

4. PROVIDE FULL METAL COVERS AT OVERHEAD CLOSERS (UNLESS OTHERWISE INDICATED), MATCH FINISH OF LOCKSET/LATCHSET AT EACH DOOR.

5. CLOSURE PRESSURE: SET TO 8.5 POUNDS FOR EXTERIOR DOORS AND 5 LBS FOR INTERIOR DOORS, PER CURRENT REQUIREMENTS OF THE AMERICANS WITH DISABILITIES ACT.

O. DOOR STOPS AND OVERHEAD STOPS:

1. LOCATE FLOOR STOPS FREE FROM FOOT TRAFFIC.

P. THRESHOLDS:

1. ACCEPTABLE MANUFACTURERS:

1.1. PEMKO.

1.2. NATIONAL GUARD

1.3. REESE

1.4. WOOSTER

1.5. ZERO

2. TYPES AS SCHEDULED IN THE DRAWINGS.

3. INSTALL THRESHOLDS IN ACCORDANCE WITH THE MANUFACTURER'S INSTRUCTIONS.

4. ENSURE PROPER WEATHER-STRIPPING IS MAINTAINED.

Q. MISCELLANEOUS:

1. PROVIDE SILENCERS FOR ALL DOORJAMBS, 3 FOR SINGLE JAMBS AND 4 FOR DOUBLE JAMBS.

R. FURNISH FOR EACH DOOR THE ITEMS SCHEDULED WITHIN THE DESIGNATED HARDWARE GROUPS AS SHOWN ON THE DRAWINGS.

S. ADJUSTMENTS AND TESTING:

1. ADJUST AND CHECK EACH OPERATING ITEM OF HARDWARE AND EACH DOOR TO ENSURE PROPER OPERATION OF FUNCTION OF EVERY UNIT. LUBRICATE MOVING PARTS WITH GRAPHITE TYPE LUBRICANT UNLESS OTHERWISE RECOMMENDED BY THE HARDWARE MANUFACTURER. REPLACE UNITS THAT CANNOT BE ADJUSTED AND LUBRICATED TO OPERATE FREELY AND SMOOTHLY AS INTENDED FOR THE APPLICATION MADE.

2. ADJUST CLOSER PRESSURES AS SPECIFIED IN SECTION 08710, UNLESS OTHERWISE REQUIRED BY JURISDICTIONAL AUTHORITIES.

3. TESTING:

3.1. TEST CLOSER FOR COMPLIANCE WITH REQUIREMENTS OF SECTION 08710, INCLUDING OPENING FORCE AND CLOSING SPEED REQUIRED BY JURISDICTIONAL AUTHORITIES.

3.2. PROVIDE TESTING DEVICE, OPERATE TEST AT EACH DOOR, AND PROVIDE A WRITTEN REPORT ON RESULTS OF TESTS.

3.3. TESTING DEVICE SHALL REMAIN IN THE POSSESSION OF THE OWNER.

SECTION - 08800 GLAZING

A. SUMMARY:

1. GLASS AND GLAZING FOR G.C. FURNISHED & INSTALLED INTERIOR AND EXTERIOR ALUMINUM STOREFRONT SYSTEMS

2. TRANSLUCENT WINDOW FILM (WHEN INDICATED ON THE DRAWINGS)

B. MATERIALS:

1. GLASS: PROVIDE THE FOLLOWING GLASS AS SCHEDULED AT THE END OF THIS SECTION:

1.1. CLEAR TEMPERED GLASS: ASTM C048, KIND FT (FULLY TEMPERED), CONDITION A (UNCOATED), TYPE I (TRANSPARENT GLASS, FLAT), CLASS 1 (CLEAR), QUALITY Q3 (GLAZING SELECT), CONFORM TO ANSI Z97.1 AND CPSC 16CFR PART 1201.

1.1.1. THICKNESS: 6.0 MM (1/4 INCH), UNLESS INDICATED OTHERWISE.

1.1.2. THICKNESS: 10.0 MM (3/8 INCH), WHEN SHOWN ON DRAWINGS.

1.1.3. IDENTIFICATION: EACH UNIT OF TEMPERED GLASS SHALL BE PERMANENTLY IDENTIFIED BY THE MANUFACTURER. THE IDENTIFICATION SHALL BE ETCHED OR CERAMIC FIRED ON THE GLASS AND BE VISIBLE WHEN THE UNIT IS GLAZED.

1.1. INSULATED UNITS - CLEAR TEMPERED GLASS: DOUBLE PANE UNITS WITH BOTH INNER AND OUTER PANES OF CLEAR TEMPERED GLASS AS SPECIFIED ABOVE.

1.1.1. GLASS THICKNESS: 6.0 MM (1/4 INCH), UNLESS INDICATED OTHERWISE.

1.1.2. UNIT THICKNESS: 1 INCH THICK UNITS; 6.0 MM (1/4 INCH) THICK INNER AND OUTER PANES, WITH 1/2 INCH AIR SPACE BETWEEN.

1.1.3. EACH UNIT OF TEMPERED GLASS SHALL BE PERMANENTLY IDENTIFIED BY THE MANUFACTURER. THE IDENTIFICATION SHALL BE ETCHED OR CERAMIC FIRED ON THE GLASS AND BE VISIBLE WHEN THE UNIT IS GLAZED. TEMPERED SPANDREL GLASS IS EXEMPTED FROM PERMANENT LABELING BUT SHALL BE IDENTIFIED BY THE MANUFACTURER WITH A REMOVABLE PAPER LABEL.

1.1. MIRRORS - TEMPERED MIRROR, GLASS 1/4 INCH THICK, ASTM 2048 FOR KIND FT (FULLY TEMPERED), CONDITION C (OTHER COATED GLASS), TYPE I (TRANSPARENT GLASS, FLAT), CLASS 2 (TINTED HEAT ABSORBING AND LIGHT REDUCING), QUALITY Q3 (GLAZING SELECT) WITH COATING TYPE AND PERFORMANCE CHARACTERISTICS AS SPECIFIED.

1.1.1. COATING AND TINT: PYROLYTIC DEPOSITED SILVER METALLIC OXIDE COATING ON CLEAR GLASS WITH VISIBLE LIGHT TRANSMITTANCE OF 12 PERCENT AND VISIBLE REFLECTANCE

2. ACCESSORIES:

2.1. SETTING BLOCKS: COMPATIBLE WITH SILICONE SEALANTS, 70-90 SHORE A HARDNESS.

2.2. SPACERS: COMPATIBLE WITH SILICONE SEALANT.

2.3. GLAZING TAPE: TREMCO "CON SPONGE, OR APPROVED.

2.4. SILICONE SEALANT: DOW CORNING "795", CLEAR COLOR.

C. FABRICATION:

1. INSULATING GLASS UNITS:

1.1. DUAL LITE UNITS FABRICATED FROM GLASS AS SCHEDULED; DUAL SEAL SYSTEM.

1.2. THIN SEALS: POLYISOBUTYLENE PRIMARY SEAL AND SILICONE SECONDARY SEAL. OUTER SEAL SHALL BE COMPATIBLE WITH GLAZING SYSTEM.

1.3. SPACER BAR: MILL FINISH ALUMINUM, FILL WITH DESICCANT; CORNERS SHALL BE PARTIALLY MITER CUT AND BENT (NOT CUT THROUGH), OR FORMED WITH CORNER KEYS ULTRASONICALLY SOLDERED IN PLACE.

1.4. CERTIFIED THROUGH THE INSULATING GLASS CERTIFICATION COUNCIL (IGCC) IN ACCORDANCE WITH ASTM E773 AND E774; CERTIFIED TO LEVEL CBA.

1.5. EACH PIECE SHALL BEAR CERTIFICATION NUMBER, DATE, AND MANUFACTURER'S IDENTIFICATION MARK.

1.6. PROVIDE TEN-YEAR MANUFACTURER'S WARRANTY, COVERING SEAL FAILURE, INTERPANE DUSTING OR MISTING.

2. TEMPERED GLASS:

2.1. GLASS WHICH HAS BEEN HEAT TREATED TO STRENGTHEN GLASS IN BENDING TO NOT LESS THAN 4.5 TIMES THE ANNEALED STRENGTH; FREE OF "TONG MARKS." CERTIFIED SAFETY GLASS IN ACCORDANCE WITH ANSI Z97.1.

2.2. FABRICATE TEMPERED GLASS UNITS SO THAT PRINCIPLE DISTORTION WILL BE IN THE HORIZONTAL DIRECTION IN THE FINISHED INSTALLATION.

2.3. UNLESS OTHERWISE APPROVED BY THE BUILDING OFFICIAL, PROVIDE MANUFACTURER'S LABEL ON EACH LITE, INDICATING TYPE AND THICKNESS OF GLASS.

3. LOW-E COATING: PPG INDUSTRIES, PITTSBURGH, PA. SOLARBAN 60.

D. INSTALLATION:

1. GLAZE IN ACCORDANCE WITH GLASS ASSOCIATION OF NORTH AMERICA (GANA) GLAZING MANUAL.

2. SETTING BLOCKS: PLACE SETTING BLOCKS IN FRAMES FOR SUPPORT OF GLASS, PLACE AT QUARTER POINTS UNLESS APPROVED OTHERWISE.

3. SET GLASS TIGHTLY IN POSITION WITH PROPER CLEARANCES IN ACCORDANCE WITH THE REFERENCED STANDARDS.

4. PERIMETER GLASS CLEARANCES WITHIN SETTING FRAME SHALL BE IN ACCORDANCE WITH GANA RECOMMENDATIONS, AND AS REQUIRED TO PROVIDE FOR WIND, EARTHQUAKE DRIFT, AND THERMAL EXPANSION.

5. UNLESS SPECIFIED OTHERWISE, GLAZE UNITS WITH GASKETS FURNISHED WITH THE FRAMING SYSTEMS SPECIFIED IN OTHER SECTIONS.

6. PROVIDE REPLACEMENT-GLAZING GASKETS WHERE EXISTING FRAMES ARE REGLAZED.

7. GLAZING FOR INTERIOR NON-RATED DOORS AND WINDOWS, WHERE GASKETS ARE NOT FURNISHED:

7.1. GLAZE WITH GLAZING TAPE.

7.2. PRE-MEASURE AND CUT TAPES TO REQUIRED LENGTHS; ADHERE TO FIXED STOPS, SETTING HORIZONTAL TAPE AT HEADS AND SILLS BEFORE VERTICAL TAPE.

7.3. INSTALL TAPE WITH TIGHT BUTT JOINTS; NO OVERLAPS WILL BE ACCEPTED. SET TAPE WITH STRAIGHT LINES LEVEL WITH FRAME SIGHT LINE.

7.4. POSITION GLASS, UNIFORMLY SEALING AGAINST TAPE. INSTALL INSIDE REMOVABLE STOPS AND PLACE TAPE IN STOPS FORMING A UNIFORM SEAL AGAINST GLASS, LEVEL WITH SIGHT LINES.

8. GLAZING FOR FIRE RATED DOORS AND WINDOWS: GLAZE IN ACCORDANCE WITH NFPA 80, UNLESS REQUIRED OTHERWISE BY THE LABELING REQUIREMENT OF THE FRAME.

E. WINDOW FILM: REFER TO FINISH SCHEDULE.

F. PROVIDE TEMPERED SAFETY GLASS WHEN LOCATED IN THE FOLLOWING AREAS:

1. IN ALL HINGED AND SLIDING GLAZED DOORS, EXCEPT WHERE WIRE GLASS IS REQUIRED TO MEET FIRE RATING REQUIREMENTS.

2. GLASS WHOSE NEAREST VERTICAL EDGE IS WITHIN 24 INCHES OF A DOOR OPENING, AND WHOSE BOTTOM EDGE IS LESS THAN 60 INCHES ABOVE THE FLOOR OR WALKING SURFACE.

3. GLASS UNITS LARGER THAN 9 SQUARE FEET IN AREA, WHOSE BOTTOM EDGE IS WITHIN 18 INCHES OF A FLOOR OR WALKING SURFACE WHICH IS IN TURN WITHIN 36 INCHES MEASURED HORIZONTALLY FROM THE GLASS UNIT.

SECTION - 0911 - LIGHT GAGE METAL SUPPORT FRAMING

A. SYSTEM DESCRIPTION:

1. SELECT FRAMING SYSTEMS, GAGES, SUPPORTS, BRACING, AND CONNECTIONS AS NECESSARY TO RESIST THE DESIGN LOADS SPECIFIED.

2. PARTITION FRAMING SHALL CONFORM TO THE WIDTHS INDICATED, UNLESS APPROVED OTHERWISE. PROVIDE HEAVIER GAGES AND DECREASED STUD SPACING AS NECESSARY TO MEET THE STRUCTURAL REQUIREMENTS.

3. STRUCTURAL REQUIREMENTS:

3.1. DEFLECTION REQUIREMENTS: MAXIMUM OF 1/240 THE SPAN.

3.2. DESIGN LOADS:

3.2.1. INTERIOR CEILING ASSEMBLIES: 5 POUNDS PER SQUARE FOOT UNIFORM LIVE LOAD, PLUS DEAD LOADS.

3.2.2. INTERIOR PARTITIONS WITHOUT WALL MOUNTED CASEWORK: 5 POUNDS PER SQUARE FOOT UNIFORM LIVE LATERAL LOAD.

3.2.3. INTERIOR PARTITIONS WITH WALL MOUNTED CASEWORK: 5 POUNDS PER SQUARE FOOT UNIFORM LIVE LATERAL LOAD, PLUS CASEWORK DEAD LOAD, PLUS CASEWORK LIVE LOAD OF 25 PSF OF SHELF AND COUNTER TOP AREA.

B. CODE REQUIREMENTS:

1. PROVIDE ASSEMBLIES MEETING THE HOURLY FIRE RATINGS INDICATED AND SPECIFIED. ASSEMBLIES SHALL BEEN TESTED IN ACCORDANCE WITH ASTM E81, AND SHALL BE APPROVED BY THE LOCAL JURISDICTIONAL CODE AUTHORITIES. COORDINATE INSTALLATION OF OTHER MATERIALS THAT ARE A PART OF EACH ASSEMBLY.

2. FIRE RATING REQUIREMENTS TAKE PRECEDENCE OVER THE CONSTRUCTION REQUIREMENTS INDICATED. IN THE EVENT OF CONFLICT, NOTIFY THE OWNER / REPRESENTATIVE, AND DO NOT BEGIN CONSTRUCTION IN THE AREA OF CONFLICT UNTIL THE CONFLICT HAS BEEN RESOLVED.

3. PROVIDE ALL CALCULATIONS, DRAWINGS, PRODUCT DATA, AND OTHER VERIFICATION AS REQUIRED BY THE JURISDICTIONAL CODE AUTHORITY TO OBTAIN APPROVAL OF THE LIGHT GAGE METAL FRAMING INSTALLATION.

C. MATERIALS:

1. LIGHT GAGE METAL FRAMING: ASTM C645; GALVANIZED; PROVIDE "C" SHAPED STUDS, U SHAPED RUNNERS, HAT AND "Z" SHAPED FURRING CHANNELS, AND OTHER SIZES AND SHAPES AS INDICATED ON THE DRAWINGS, AND AS SPECIFIED; MINIMUM 25 GAGE.

2. COLD ROLLED CHANNELS: RUST INHIBITIVE PAINT COATING; SIZES IN ACCORDANCE WITH ASTM C754.

3. SCREWS: SELF-TAPPING; LOW PROFILE HEAD.

4. OTHER FRAMING MATERIALS: FURNISH IN ACCORDANCE WITH ASTM C754.

4.1. SECURE RUNNERS WITH FASTENERS AT MAXIMUM 24 INCHES O.C.

4.2. AT CONCRETE FLOORS, USE POWDER DRIVEN FASTENERS OR DRILLED IN CONCRETE ANCHORS.

4.3. WHERE WALLS ARE INDICATED AS NOT BEING CONTINUOUS TO STRUCTURE ABOVE, ATTACH TOP RUNNER TO ACOUSTICAL CEILING GRID WITH SCREWS AT 24 INCHES ON CENTER. PROVIDE SPACER STRIP BETWEEN RUNNER AND CEILING SUSPENSION SYSTEM TO ALLOW TEGULAR OR REVEAL EDGE ACOUSTICAL PANELS TO CLEAR PARTITION.

D. PARTITION FRAMING:

1. RUNNERS:

2. UNLESS INDICATED OTHERWISE, INSTALL STUDS VERTICALLY AT 16 INCHES O.C. AND NOT MORE THAN 2 INCHES FROM ABUTTING CONSTRUCTION, AT EACH SIDE OF OPENINGS, AND AT CORNERS.

3. FIT RUNNERS UNDER AND ABOVE OPENINGS; SECURE INTERMEDIATE STUDS AT SPACING OF WALL STUDS.

4. BRACE PARTITION FRAMING SYSTEM AND MAKE RIGID. PROVIDE DIAGONAL STUD BRACING AT 8 FT ON CENTER AT ALL FRAMING THAT DOES NOT EXTEND TO STRUCTURE.

5. INSTALL DOUBLE STUDS CONTINUOUS FROM FLOOR TO TOP TRACK AT THE JAMB OF EACH DOOR FRAME AND CASED OPENING. STUDS SHALL BE AT LEAST THE SAME GAGE AS THE ADJACENT STUDS, BUT IN NO CASE LESS THAN 20-GAGE.

6. PROVIDE MINIMUM 20 GAGE STUDS AT ALL PARTITIONS SUPPORTING CASEWORK OR COUNTER TOPS.

7. COORDINATE ERECTION OF STUDS WITH INSTALLATION OF SERVICE UTILITIES. ALIGN STUD WEB OPENINGS.

8. COORDINATE ERECTION OF STUD SYSTEM WITH REQUIREMENTS OF DOOR AND WINDOW FRAMES, FIRE EXTINGUISHER CABINETS, RECESSED TOILET ACCESSORIES, ACCESS DOORS, AND OTHER CONSTRUCTION WITHIN MOUNTED PARTITION CONSTRUCTION.

9. COORDINATE THE INSTALLATION OF FRAMING WITH THE GYPSUM BOARD INSTALLER TO ENSURE SUPPORT AT ALL BOARD EDGES. PROVIDE FRAMING IMMEDIATELY EITHER SIDE OF EXPANSION JOINTS.

10. STUD SPLICING NOT PERMISSIBLE.

11. AT NON-LOAD BEARING FULL HEIGHT PARTITIONS SUBJECT TO COMPRESSION CAUSED BY OVERHEAD STRUCTURAL DEFLECTION, CUT STUDS 1/2 INCH SHORT FROM FULL HEIGHT. DO NOT RIGIDLY CONNECT STUD TO TOP RUNNER.

12. STUD BRIDGING:

12.1. AT INTERIOR PARTITIONS GREATER THAN 4 FEET IN LENGTH, AND WITH RIGID FACING MATERIAL ON ONE STUD FLANGE ONLY, PROVIDE 3/4" BRIDGING CHANNELS IN HORIZONTAL ROWS AT A MAXIMUM OF 3'-0" ON CENTER FOR THE FULL HEIGHT OF THE PARTITION.

12.2. INTERIOR FULL HEIGHT PARTITIONS (STUDS EXTENDING FROM THE FLOOR TO THE STRUCTURE ABOVE) WITH RIGID FACING MATERIAL STOPPING 3'-0" OR MORE BELOW TOP OF STUDS. PROVIDE ONE ROW 3/4" BRIDGING CHANNEL HORIZONTALLY AT TERMINATION OF GYPSUM BOARD MATERIAL, AND ONE ADDITIONAL ROW FOR EACH 9'-0" OF EXPOSED STUDS.

12.3. INSTALL STUD BRIDGING CHANNELS IN LONG LENGTHS, WIRE TYING AND LAPPING THE JOINTS A MINIMUM OF 12". ATTACH BRIDGING CHANNEL TO EACH STUD AS SHOWN IN MANUFACTURERS PRINTED INSTRUCTIONS.

E. BACKING:

1. BLOCKING AND BACKING SHALL BE PROVIDED IN ACCORDANCE WITH SECTION 06100.

F. STUD AND RUNNER CEILING FRAMING:

1. SECURE RUNNERS TO STRUCTURE ABOVE WITH FASTENERS AS SHOWN ON THE DRAWINGS.

2. SCREW-FASTEN FRAMING AT EACH JOINT.

3. PROVIDE DETAILING AS INDICATED TO ALLOW FOR DEFLECTION OF BUILDING STRUCTURE.

4. PROVIDE BRACING TO MEET SEISMIC REQUIREMENTS AS REQUIRED BY LOCAL CODE.

G. SUSPENDED CEILING FRAMING:

1. PROVIDE SUSPENDED FRAMING AS SPECIFIED IN ASTM C754, UNLESS OTHERWISE DETAILED.

2. SUSPEND CEILING FROM OVERHEAD CONCRETE DECK AND STRUCTURAL ELEMENTS ONLY PER LL. REQUIREMENTS. DO NOT SUPPORT FROM ANY ELECTRICAL, HVAC, PLUMBING, OR SPRINKLER SYSTEM COMPONENTS. WHERE OVERHEAD OBSTRUCTIONS PREVENT THE REGULAR SPACING OF HANGERS, PROVIDE SECONDARY CARRYING MEMBERS FOR INDIRECT SUPPORT OF THE SUSPENSION SYSTEM, OR REINFORCE THE NEAREST ADJACENT HANGERS AND RELATED FRAMING COMPONENTS AS REQUIRED TO SPAN THE REQUIRED DISTANCE.

3. SPACE CARRYING CHANNELS 4 FEET ON CENTER WITH ALL SPLICES LAPPED 12 INCHES AND TIED.

4. SUPPORT COLD ROLLED CARRYING CHANNELS WITH HANGER WIRES SPACED AT 4 FEET ON CENTER FOR GYPSUM BOARD CEILINGS. LOOP HANGER WIRE AROUND SUPPORT ELEMENT AND TIGHTLY WRAP AROUND VERTICAL WIRE 3 TIMES; CUT OFF NEATLY.

5. SPACE FURRING CHANNELS 16" O.C. WITH ALL SPLICES LAPPED 12", MINIMUM AND TIED; CLIP OR SADDLE TIE TO RUNNER CHANNELS WITH 16GA. TIE WIRE.

6. PROVIDE BRACING TO MEET SEISMIC REQUIREMENTS.

H. INSTALLATION TOLERANCES:

1. INSTALL MEMBERS TO PROVIDE SURFACE PLANE WITH MAXIMUM VARIATION OF 1/8 INCH IN 10 FEET IN ANY DIRECTION.

2. LOCATE ASSEMBLIES WITHIN 1/4 INCH OF REQUIRED LOCATIONS.

SECTION - 09250 - GYPSUM BOARD

A. SUMMARY: INTERIOR GYPSUM BOARD.

B. MATERIALS:

1. GYPSUM BOARD:

1.1. 5/8 INCH THICK UNLESS NOTED OTHERWISE; PROVIDE TYPE X IN FIRE RATED PARTITIONS.

1.2. STANDARD BOARD: ASTM C36.

1.3. WATER RESISTANT BOARD: ASTM C630.

2. ACCESSORIES:

2.1. TRIM: CONCEALED FLANGE CRIMP-ON OR TAPE-ON TYPE; METAL OR PVC AT CONTRACTOR'S OPTION 6A 26.

2.2. JOINT COMPOUND, TAPE, AND FINISHING COMPOUND: ASTM C475 AND 6A 26; USE SETTING TYPE JOINT COMPOUND AT WATER RESISTANT BOARD.

2.3. 6HB PRIME COAT: U56 / BEADEX MANUFACTURING COMPANY (AUBURN, WA; 253 833 6600) "PRECOAT." DJ SCREWS: ASTM C1002.

C. INSTALLATION:

1. INSTALLATION STANDARD: UNLESS SPECIFIED OTHERWISE, PERFORM WORK IN ACCORDANCE WITH GYPSUM ASSOCIATION 26, "RECOMMENDED SPECIFICATIONS FOR THE APPLICATION AND FINISHING OF GYPSUM WALLBOARD."

2. INSTALL WATER RESISTANT BOARD AS A SUBSTRATE FOR SURFACES SCHEDULED TO RECEIVE BONDED FINISHES IN RESTROOMS.

3. SCREW-FASTEN BOARD TO FRAMING, UNLESS APPROVED OTHERWISE.

4. INSTALLATION OF GYPSUM BOARD AT CURVED SURFACES.

4.1. INSTALL SINGLE LAYER OF 5/8" BOARD OR MULTIPLE LAYERS OF THINNER BOARD AT INSTALLERS OPTION.

4.2. FOR THICKER BOARD AND TIGHTER RADI, DAMPEN BOARD, BLOCK TO THE REQUIRED UNIFORM RADIUS, AND ALLOW TO SET FOR APPROX. ONE HOUR PRIOR TO INSTALL.

4.3. FOR RADI TIGHTER THAN 48" DAMPEN BOARD WITH 10 TO 15 OZ OF WATER PER SIDE AND ALLOW TO SOAK FOR 15 MINUTES PRIOR TO INSTALLATION. COMPLY WITH MANUFACTURER'S INSTRUCTIONS FOR ATTACHMENT TO FRAMING.

4.4. INSTALL BOARD WITH LONG DIRECTION PERPENDICULAR TO AXIS OF CURVE RADIUS.

4.5. INSTALL SECOND LAYER IN ACCORDANCE WITH SPECIFICATIONS FOR "MULTIPLE LAYER APPLICATIONS."

4.6. SELECT METHODS TO PRODUCE A UNIFORM RADIUS WITH SMOOTH TRANSITIONS AT JOINTS. INSTALL BOARD TIGHT TO FRAMING.

5. FINISHING:

5.1. PROVIDE FINISHING IN ACCORDANCE WITH GA 214.

5.2. WHERE NECESSARY TO SAND, DO SO WITHOUT DAMAGING THE FACE OF THE GYPSUM BOARD.

5.3. GYPSUM BOARD SURFACES SHALL FORM A SMOOTH SURFACE FREE OF RIDGES, JOINT MARKS, FASTENER DEPRESSIONS, AND JOINT FILLER LINES. TAPERED BOARD JOINTS SHALL BE TAPED, FILLED, AND FEATHERED TO 12 INCHES EITHER SIDE OF THE JOINT. NON-TAPERED BOARD JOINTS SHALL BE TAPED, FILLED, AND FEATHERED TO 18 INCHES EITHER SIDE OF THE JOINT.

5.4. FINISH EXISTING GYPSUM BOARD SURFACES TO REMAIN TO MATCH NEW GYPSUM BOARD SURFACES.

5.5. LEVELS OF FINISH:

5.5.1. LEVEL 5: PROVIDE AT PUBLIC AREAS, INCLUDING SURFACES TO RECEIVE EIFS FINISHES.

5.5.2. LEVEL 4: PROVIDE AT BACK OF HOUSE AREAS.

6. APPLY PRIME COAT TO ALL GWB SURFACES SCHEDULED FOR LEVEL 4 AND LEVEL 5 FINISHES.

SECTION - 09300 - INTERIOR TILE

A. SUMMARY: INTERIOR TILE SYSTEMS.

B. REFERENCES:

1. AMERICAN NATIONAL STANDARDS INSTITUTE (ANSI):

1.1. A108.5 - CERAMIC TILE INSTALLED WITH DRY-SET AND LATEX PORTLAND CEMENT MORTAR.

1.2. A118.4 - LATEX-PORTLAND CEMENT MORTAR.

2. TILE COUNCIL OF AMERICA (TCA):

2.1. HANDBOOK OF FOR CERAMIC TILE INSTALLATION, CURRENT EDITION.

C. QUALITY ASSURANCE:

1. CONFORM TO ANSI STANDARD SPECIFICATIONS FOR THE INSTALLATION OF TILE.

PAUL DHANENS • ARCHITECT

ARCHITECT

LICENSED ARCHITECT PAUL DHANENS NO. C-23843 RENEWAL STATE OF CALIFORNIA

5100 CALIFORNIA AVE. SUITE 107
BAKERSFIELD, CALIFORNIA 93309
TELEPHONE: (661) 326-8936
FACSIMILE: (661) 326-8937

CONSULTANT

COPYRIGHT

PAUL DHANENS ARCHITECT expressly reserves its copyright and other property rights in these documents which are not to be reproduced, changed or copied in any written, graphic or electronic form, nor assigned to any third party without the expressed written consent of PAUL DHANENS ARCHITECT.

NOTICE TO CONTRACTORS
Written dimensions on these drawings shall take precedence over scaled dimensions. Contractor shall verify and be responsible for confirming all dimensions and shall notify the architect immediately of any descripencies or field variations discovered.

PROJECT

TENANT IMPROVEMENT FOR

FAMOUS FOR Steak 'n Shake STEAKBURGERS

1966 WEST AVE L
LANCASTER, CA

DATE	ISSUED FOR
6-28-11	BUILDING DEPT SUBMITTAL

NO.	REVISIONS
1	
2	
3	
4	

SPECIFICATION

FILE NAME: 2366A6-0

SHEET

A-6.3

D. MATERIALS:

1. TILE TYPES: AS SCHEDULED ON THE DRAWINGS.

2. SETTING MATERIALS:

2.1. THINSET MORTAR: LATEX-PORTLAND CEMENT IN ACCORDANCE WITH ANSI A118.4; 100 % ACRYLIC LATEX ADDITIVE AT ALL LOCATIONS. "KERABOND" WITH "UNIVERSAL KERALASTIC" BY MAPEI CORP, DEERFIELD. FL (800/462-2734), OR "21 CRETE FILLER POWDER" WITH 4237 LATEX THIN-SET ADDITIVE BY LATICRETE INTERNATIONAL, BETHANY CT (800/243-4788); PROPORTIONS AS RECOMMENDED BY THE MANUFACTURER; OR APPROVED.

2.2. RAPID-SET THIN BED MORTAR: LATEX MODIFIED; MINIMUM 400 PSI 28 DAY SHEAR STRENGTH TO PORCELAIN (IMPERVIOUS) TILES; "GRANI/RAPID" WITH "KER 318" FLEXIBLE ADMIXTURE" BY MAPEI CORP; OR "21 CRETE FILLER POWDER" WITH "4237 LATEX THIN-SET MORTAR ADDITIVE" AND "101 RAPID SET LATEX"(PROPORTIONS AS RECOMMENDED BY THE MANUFACTURER FOR THE SETTING TIME REQUIRED)," BY LATICRETE INTERNATIONAL, INC.

2.3. ORGANIC ADHESIVES: ANSI A136.1, TYPE I; PROVIDE PRIMER/SEALER AS RECOMMENDED BY THE ADHESIVE MANUFACTURER.

3. GROUT:

3.1. "45 RAVEN"- SPECTRALOCK EPOXY GROUT OR 2000IG (INDUSTRIAL GROUT) BY LATICRETE INTERNATIONAL.

3.2. FAST SETTING GROUT: "FLOOR JOINT AND GROUT FILLER" WITH "3701 LATEX MORTAR ADMIXTURE" AND "101 RAPID SET LATEX", BY LATICRETE INTERNATIONAL, INC. (PROPORTIONS AS RECOMMENDED BY THE MANUFACTURER FOR THE SETTING TIME REQUIRED); SANDED, EXCEPT UNSANDED AT JOINTS SCHEDULED AT 1/16 INCH WIDE.

4. METAL SCREED: AS MANUFACTURED BY SCHLUTER SYSTEMS, INC. (800/225-8902); CLEAR ANODIZED ALUMINUM TILE EDGING TRIM; SIZES AS REQUIRED FOR INSTALLATION OF TOP OF SCREED FLUSH WITH TOP OF TILE, OR AS OTHERWISE DETAILED.

5. CRACK ISOLATION MEMBRANE: ONE OF THE FOLLOWING.

5.1. LATICRETE "BLUE 92 ANTI-FRACTURE MEMBRANE".

5.2. "PRP 315" BY MAPEI CORP.

6. REINFORCED WATERPROOF MEMBRANE:

6.1. LATICRETE INTERNATIONAL, INC. "LATICRETE 9235 GENERAL PURPOSE WATERPROOF MEMBRANE".

6.2. "NOBLESEAL TS" BY THE NOBLE COMPANY, OR "DAL-SEAL TS." BY DAL-TILE CORP; CPE SHEET WITH NON-WOVEN POLYESTER FABRIC LAMINATED TO BOTH SIDES; NOBLEBOND 21 ADHESIVE BOND COAT.

7. SILOXANE TYPE TILE SEALER:

7.1. CERAMASEAL "MAGIC SEAL" BY BOSTIK/CERAMASEAL (800/523-6530).

7.2. MIRACLE SEALANTS "511-H2O" BY MIRACLE SEALANTS AND ABRASIVES COMPANY (800/350-1901).

8. CEMENTITIOUS BACKER BOARD:

8.1. 1/2 INCH NOMINAL THICKNESS AGGREGATED PORTLAND CEMENT PANEL, REINFORCED WITH GLASS FIBER MESH; "WONDERBOARD" BY CUSTOM BUILDING PRODUCTS (800/272-8786), "DUROCK INTERIOR OR EXTERIOR" BY USG, OR GEORGIA PACIFIC "DENS-SHIELD," OR APPROVED.

8.2. TAPE FOR BACKER BOARD: OPEN WEAVE GLASS MESH JOINT TAPE, SELF-ADHESIVE; 2-1/2 INCHES WIDE.

8.3. FASTENERS: AS RECOMMENDED BY THE BACKER BOARD MANUFACTURER; THREAD FORMING SELF-DRILLING WAFER HEAD SCREWS; POLYMER COATED OR ZINC PLATED; USG "DUROCK SCREWS," "ROCK-ON," OR APPROVED.

E. PREPARATION: CLEAN SUBSTRATE SURFACES FREE OF GREASE, DIRT, DUST, ORGANIC IMPURITIES, CURING AGENTS, AND OTHER MATERIALS THAT WOULD IMPAIR BOND. CLEAN FLOORS WITH "BLAST-TRACK" UNIT IF NECESSARY.

F. SLAB LEVELING: (COORDINATE WITH LANDLORD REQUIREMENTS)

1. PRIOR TO INSTALLATION OF THINSET FLOOR TILE, WHERE LOCAL IRREGULARITIES IN THE SUBSTRATE SURFACE WOULD PREVENT LEVEL INSTALLATION OF THE TILE, THE SUBSTRATE SHALL BE BROUGHT TO PLANE SURFACE WITH VARIATIONS NOT TO EXCEED 1/8 INCH IN 4 FEET (CUMULATIVE) AND 1/4 INCH IN 10 FEET (NON-CUMULATIVE). SMOOTH ALL ABRUPT CHANGES IN PLANE.

2. USE THINSET MORTAR OR OTHER FILLER FOR SLAB LEVELING. OTHER FILLERS ARE SUBJECT TO ENDORSEMENT BY THE SETTING MORTAR MANUFACTURER. SUBMIT MANUFACTURER'S LETTER OF APPROVAL TO THE OWNER / REPRESENTATIVE, AND THE OWNER'S REPRESENTATIVE.

3. SCREED OR FLOAT TO APPROPRIATE THICKNESS AND SPECIFIED SURFACE TOLERANCE. ALLOW TO SET PRIOR TO PROCEEDING WITH INSTALLATION. DO NOT EXCEED THE MAXIMUM THICKNESSES FOR THIN BED MORTAR AS RECOMMENDED BY THE MANUFACTURER.

G. CRACK ISOLATION:

1. INSTALL CRACK ISOLATION MEMBRANE ON A UNIT PRICE BASIS IN ACCORDANCE WITH THE MANUFACTURER'S INSTRUCTIONS, UNLESS INDICATED OR SPECIFIED OTHERWISE.

2. CRACK ISOLATION MEMBRANE MAY BE REQUIRED AT THE FOLLOWING LOCATIONS:

2.1. AT CONTROL AND CONSTRUCTION JOINTS IN CONCRETE FLOORS.

2.2. AT CHANGES IN SUBSTRATE MATERIALS.

2.3. SHRINKAGE CRACKS 1/16 INCH OR LARGER IN EXISTING SLABS.

3. EXTEND A MINIMUM OF 24 INCHES EACH SIDE OF CRACK OR JOINT.

4. SUBSTRATE EXAMINATION:

4.1. SUBSTRATES ARE SUBJECT TO EXAMINATION BY THE OWNER AND THE OWNER / REPRESENTATIVE PRIOR TO INSTALLATION OF TILE OR SLAB LEVELING MATERIALS. FURNISH A MINIMUM OF 7 DAYS NOTICE.

4.2. THE EXAMINATION WILL DETERMINE THE NEED FOR CRACK ISOLATION MEMBRANE AT LOCATIONS SCHEDULED ABOVE.

1. INSTALL WATERPROOF MEMBRANE INTO CLAMPING RING OF FLOOR DRAINS.

2. PROTECT WATERPROOF MEMBRANE FROM DAMAGE UNTIL AFTER TILE INSTALLATION IS COMPLETE.

3. MEMBRANE LOCATIONS ARE SCHEDULED AT THE END OF THIS SECTION.

4. FLOOD TESTING OF MEMBRANE:

0.1. WATER TEST WATERPROOF MEMBRANE INSTALLATIONS AT ABOVE GRADE FLOORS PRIOR TO INSTALLATION OF TILE.

0.2. NOTIFY THE OWNER / REPRESENTATIVE A MINIMUM OF 72 HOURS PRIOR TO TESTING.

0.3. VERIFY THAT ELEMENTS INSTALLED BY OTHER TRADES WHICH PENETRATE THE MEMBRANE ARE SEALED AND READY TO RECEIVE TESTING.

0.4. PLUG DRAINS AND PROVIDE WATER DAMS TO CONTAIN THE WATER.

0.5. FILL TEST AREA WITH WATER TO A DEPTH OF 1 INCH AT THE SHALLOWEST POINT, AND LEAVE FOR A MINIMUM OF 24 HOURS.

0.6. REPAIR LEAKS OBSERVED FROM TEST; RETEST AS NECESSARY TO ACHIEVE A LEAK-FREE INSTALLATION.

H. WATERPROOF MEMBRANE INSTALLATION:

1. INSTALL WATERPROOF MEMBRANES IN STRICT ACCORDANCE WITH MANUFACTURER'S INSTALLATION INSTRUCTIONS.

2. EXCEPT WHERE INDICATED OTHERWISE, EXTEND WATERPROOF MEMBRANE UP THE WALL TO 4 INCH MINIMUM HEIGHT. DO NOT EXPOSE THE WATERPROOF MEMBRANE TO VIEW.

I. SCREED INSTALLATION:

1. INSTALL SCREEDS AT TILE FIELD EDGES AT THE LOCATIONS INDICATED.

2. ACCURATELY CUT TO LENGTH FOR FLUSH TIGHTLY BUTTED JOINTS. PROVIDE MITER CUT ANGLE JOINTS. REMOVE BURRS AT FIELD CUTS.

3. INSTALL IN LONGEST POSSIBLE LENGTHS, EXCEPT THAT NO SCREED SECTION SHALL BE LONGER THAN 12 FEET OR SHORTER THAN 4 FEET IN LENGTH FOR CONTINUOUS RUNS GREATER THAN 16 FEET.

4. INSTALL SCREEDS FREE FROM WAVES AND VARIATIONS IN HEIGHT, FLUSH WITH TOP OF ADJACENT TILE SURFACES.

5. SET SCREEDS DIRECTLY IN SETTING BED AS THE TILE INSTALLATION PROCEEDS. COMPLY WITH SCREED MANUFACTURER / INSTRUCTIONS TO ACHIEVE MORTAR TIGHTLY COMPACTED BETWEEN SCREED AND TILE EDGE.

6. GRIND SCREED JOINTS AS NECESSARY TO CORRECT MINOR MISALIGNMENT AND TO EASE SHARP OUTSIDE CORNERS.

D. CEMENTITIOUS BACKER BOARD INSTALLATION

1. INSTALL IN ACCORDANCE WITH THE MANUFACTURER'S INSTALLATION INSTRUCTIONS.

2. INSTALL UNITS WITH EDGES FIRMLY SUPPORTED.

3. SCREW-ATTACH UNITS WITH 1 INCH LONG DRYWALL SCREWS SPACED 6 INCHES ON CENTER ALONG FRAMING.

4. INSTALL FIBERGLASS REINFORCING TAPE AT JOINTS BETWEEN PANELS. COMPLETELY EMBED IN A THIN SET MORTAR BED. TROWEL MORTAR SMOOTH WITH ADJACENT SURFACES.

5. CEMENT BACKER BOARD SHALL BE USED AT ALL VERTICAL MORTAR-SET STONE LOCATIONS.

K. INSTALLATION OF INTERIOR TILE:

1. INTERIOR FLOOR APPLICATION - THINSET OVER CONCRETE SUBSTRATE OR CRACK ISOLATION MEMBRANE.

1.1. TCA SYSTEM: SIMILAR TO F113.

1.2. INSTALLATION STANDARD: ANSI A108.5.

1.3. SETTING MATERIALS: THINSET MORTAR; 3/32-INCH MINIMUM THICKNESS.

2. WALL APPLICATION - GYPSUM BOARD SUBSTRATE:

2.1. TCA SYSTEM: SIMILAR TO W243, OR W223.

2.2. INSTALLATION STANDARD: ANSI A108.5 OR A108.4

2.3. SETTING MATERIALS: THINSET MORTAR OR ORGANIC ADHESIVE.

2.4. JOINT PATTERN:

2.4.1. LAY OUT TILE PATTERN PRIOR TO COMMENCING TILE INSTALLATION.

2.4.2. ACCURATELY LOCATE GROUT JOINTS ON LINES INDICATED; WHERE NOT INDICATED, ADJUST GROUT JOINTS WITHIN SPECIFIED TOLERANCES TO MINIMIZE USE OF CUT TILES AT FIELD TILES.

2.4.3. WHERE CUT TILES ARE NECESSARY, POSITION FLOOR TILE SUCH THAT CUT TILE AT EACH EDGE OF EACH RECTILINEAR FIELD IS NOT LESS THAN HALF OF A FULL SIZE UNIT.

3. WALL APPLICATION - THINSET OVER CEMENTITIOUS BACKING BOARD SUBSTRATE:

3.1. TCA SYSTEM: SIMILAR TO W244.

3.2. INSTALLATION STANDARD: ANSI A108.5 OR A108.4

3.3. SETTING MATERIALS: THINSET MORTAR.

3.4. JOINT PATTERN:

3.4.1. LAY OUT TILE PATTERN PRIOR TO COMMENCING TILE INSTALLATION.

3.4.2. ACCURATELY LOCATE GROUT JOINTS ON LINES INDICATED; WHERE NOT INDICATED, ADJUST GROUT JOINTS WITHIN SPECIFIED TOLERANCES TO MINIMIZE USE OF CUT TILES AT FIELD EDGES

3.4.3. WHERE CUT TILES ARE NECESSARY, POSITION FLOOR TILE SUCH THAT CUT TILE AT EACH EDGE OF EACH RECTILINEAR FIELD IS NOT LESS THAN HALF OF A FULL SIZE UNIT.

4. JOINT PATTERN:

4.1. LAY OUT TILE PATTERN PRIOR TO COMMENCING TILE INSTALLATION.

4.2. ACCURATELY LOCATE GROUT JOINTS ON LINES INDICATED; WHERE NOT INDICATED, ADJUST GROUT JOINTS WITHIN SPECIFIED TOLERANCES TO MINIMIZE USE OF CUT TILES AT FIELD EDGES.

4.3. WHERE CUT TILES ARE NECESSARY, POSITION FLOOR TILE SUCH THAT CUT TILE AT EACH EDGE OF EACH RECTILINEAR FIELD IS NOT LESS THAN HALF OF A FULL SIZE UNIT.

4.4. UNLESS OTHERWISE INDICATED, TILE JOINTS SHALL BE 1/8" WIDE.

5. CLEAN JOINTS OF MORTAR TO MINIMUM DEPTH OF 1/4 INCH TO ALLOW SUBSEQUENT GROUT INSTALLATION.

6. TOLERANCES:

6.1. JOINT WIDTH VARIATION: PLUS OR MINUS 25% OF THE PROPOSED JOINT WIDTH.

6.2. TAPER: PLUS OR MINUS 25% FROM ONE END TO THE OTHER.

6.3. NO PORTION OF A TILE SURFACE SHALL VARY MORE THAN 1/16 INCH ABOVE OR BELOW AN ADJACENT TILE SURFACE.

6.4. INSTALL TILE FIELDS LEVEL TO WITHIN TOLERANCE SPECIFIED FOR FINISHED SUBSTRATE.

7. SPECIAL FLOOR TILE INSTALLATION REQUIREMENTS:

7.1. WASH BACKS OF EACH TILE TO REMOVE ALL DUST AND SOIL THAT WOULD COMPROMISE ADHESION.

7.2. DAMPEN SUBSTRATE AS NECESSARY TO PREVENT EXCESSIVE SUCTION. TROWEL MORTAR ONTO SURFACES TO RECEIVE TILE.

7.3. APPLY MORTAR BOND COAT WITH NOTCHED TROWEL AS REQUIRED FOR PROPER LEVEL.

7.4. SET TILE WITHIN TIME SPAN RECOMMENDED BY MORTAR MANUFACTURER.

7.5. BACK BUTTER TILES PRIOR TO SETTING TO ACHIEVE MAXIMUM MORTAR COVERAGE OVER BACK OF TILE AND SUBSTRATE.

7.6. SET TILES IN ACCURATE ALIGNMENT. BEAT IN WITH A WOOD BLOCK, RUBBER HAMMER, OR TWIST AS NECESSARY TO LEVEL TILES.

L. GROUTING:

1. MIX GROUTS IN ACCORDANCE WITH MANUFACTURER'S INSTRUCTIONS.

2. GROUT ALL JOINTS, EXCEPT EXPANSION JOINTS, IN ACCORDANCE WITH THE MANUFACTURER'S RECOMMENDATIONS. FLOAT JOINTS TO A SLIGHTLY CONCAVE PROFILE.

3. REMOVE EXCESS GROUT FROM TILE SURFACES IN ACCORDANCE WITH THE GROUT AND TILE MANUFACTURER'S RECOMMENDATIONS. DO NOT USE EXCESS AMOUNTS OF WATER.

4. PROTECT ADJACENT SURFACES FROM DAMAGE IF ACID CLEANERS ARE USED.

5. DO NOT GROUT JOINTS INDICATED TO RECEIVE SEALANTS, INCLUDING INSIDE RIGHT ANGLE CORNER JOINTS BETWEEN FLOORS AND WALLS OF COLUMN BASES. GROUT JOINTS PERPENDICULAR TO EXPANSION JOINTS SHALL BE FINISHED FLUSH WITH TILE EDGES.

6. CURED GROUT JOINTS SHALL BE MADE FREE OF EFFLORESCENCE, PRIOR TO SEALING.

7. CURE INSTALLATION IN ACCORDANCE WITH THE GROUT MANUFACTURER'S RECOMMENDATIONS. PROTECT TILE AND GROUT DURING CURING OPERATIONS.

M. EXPANSION JOINT

1. PLACE EXPANSION JOINTS AS INDICATED ON THE DRAWINGS, BUT IN NO CASE MORE THAN 30-FOOT INTERVALS FOR INTERIOR INSTALLATIONS.

2. PLACE EXPANSION JOINTS AT CONTROL AND EXPANSION JOINTS IN CONCRETE SLABS, AND AT INTERSECTIONS WITH WALLS AND COLUMNS.

3. JOINT SIZES: SET TO MATCH WIDTH OF TYPICAL GROUTED JOINT.

4. LEAVE EXPANSION JOINTS FREE OF MORTAR.

5. SEALANT MATERIALS AND INSTALLATION ARE SPECIFIED IN SECTION 07920.

N. CLEANING: WASH AND THOROUGHLY RINSE ALL TILE. LEAVE ALL TILE SURFACES CLEAN.

O. TILE SEALING:

1. APPLY SEALER IN ACCORDANCE WITH THE MANUFACTURER'S RECOMMENDATIONS TO ACHIEVE MAXIMUM PENETRATION INTO GROUTS

2. WIPE TILE SURFACES AFTER APPLICATION AS NECESSARY TO REMOVE ALL VISIBLE SEALER RESIDUE.

P. SPECIAL PROTECTION REQUIREMENTS FOR TILE SURFACES:

1. AREAS SUBJECT ONLY TO FOOT TRAFFIC: LAY DOWN NON-STAINING CURING PAPER LAPPED AND SEALED AT JOINTS AND EDGES WITH NASHUA BRAND DUCT TAPE. DO NOT USE POLYETHYLENE OR PRODUCTS CONTAINING BITUMINOUS MATERIALS.

2. AREAS SUBJECT TO ROLLING TRUCKS, DOLLIES AND OTHER EQUIPMENT: IN ADDITION TO THE ABOVE, SUCH AREAS SHALL BE FURTHER PROTECTED BY CONTINUOUS PLYWOOD OR HARDBOARD RUNWAYS. COORDINATE DESIGNATION OF SUCH AREAS.

SECTION - 09510 - ACOUSTICAL CEILINGS

A. REFERENCES:

1. AMERICAN SOCIETY FOR TESTING AND MATERIALS (ASTM):

1.1. C635 - METAL SUSPENSION SYSTEMS FOR ACOUSTICAL TILE AND LAY-IN PANEL CEILINGS.

1.2. C636 - RECOMMENDED PRACTICE FOR THE INSTALLATION OF METAL CEILING SUSPENSION SYSTEMS FOR ACOUSTICAL TILE AND LAY-IN PANELS.

B. PRODUCTS:

1. CEILING TILE: PER FINISH LEGEND

2. SUSPENSION SYSTEM:

2.1. MANUFACTURERS: SUBJECT TO COMPLIANCE WITH PROJECT REQUIREMENTS, PROVIDE SUSPENSION SYSTEM FROM ONE OF THE FOLLOWING:

2.1.1. "PROTECTONE" ALUMINUM CAPPED, BY BPB CELOTEX.

2.1.2. ZXA, BY USG.

2.2. MATERIALS:

2.2.1. GRID: ASTM C635, INTERMEDIATE DUTY, STEEL EXPOSED T; NOMINAL 1 INCH WIDTH; STAB-IN CONNECTIONS.

2.2.2. ACCESSORIES: STABILIZER BARS, CLIPS, AND SPLICES.

2.2.3. GRID FINISH: WHITE.

2.2.4. SUPPORT SYSTEM: HOT OR COLD ROLLED STEEL CHANNELS; GALVANIZED HANGER WIRE, MINIMUM 12 gauge.

2.2.5. EDGE MOLDINGS: METAL CHANNEL WITH EXPOSED FLANGE TO MATCH SUSPENSION SYSTEM.

C. INSTALLATION:

1. INSTALL SYSTEM IN ACCORDANCE WITH ASTM C636 AND THE REQUIREMENTS OF THE JURISDICTIONAL CODE AUTHORITIES.

2. INSTALL GRID TO PRODUCE FINISHED CEILING TRUE TO LINES AND LEVELS INDICATED, WITHIN THE SPECIFIED TOLERANCES.

3. INSTALL SUSPENSION SYSTEMS IN A MANNER TO SUPPORT ALL SUPERIMPOSED LOADS, WITH MAXIMUM PERMISSIBLE DEFLECTION OF 1/270 OF SPAN.

4. HANG SYSTEM INDEPENDENT OF WALLS, COLUMNS, DUCTS, PIPES AND CONDUIT. WHERE DUCTS OR OTHER EQUIPMENT PREVENT THE REGULAR SPACING OF HANGERS, PROVIDE SECONDARY CARRYING MEMBERS FOR INDIRECT SUPPORT OF THE SUSPENSIONS SYSTEM, OR REINFORCE THE NEAREST ADJACENT HANGERS AND RELATED CARRYING CHANNELS AS REQUIRED TO SPAN THE REQUIRED DISTANCE.

5. CENTER SYSTEM ON ROOM AXIS ACCORDING TO REFLECTED CEILING PLANS.

1. PROVIDE ALL ANCHORS REQUIRED FOR THE INSTALLATION OF THE CEILING SYSTEM. DO NOT ANCHOR SYSTEM IN ANY MANNER THAT MIGHT CAUSE DAMAGE TO THE STRUCTURAL SYSTEM.

2. INSTALL EDGE MOLDING AT INTERSECTION OF CEILING AND VERTICAL SURFACES, USING LONGEST PRACTICAL LENGTHS. MITER CORNERS. PROVIDE EDGE MOLDINGS AT JUNCTIONS WITH OTHER INTERRUPTIONS. FABRICATE EDGE MOLDINGS TO FIT THE SURFACES ENCOUNTERED.

3. FIT ACOUSTIC LAY-IN PANELS IN PLACE, FREE FROM DAMAGED EDGES OR OTHER DEFECTS DETRIMENTAL TO APPEARANCE AND FUNCTION. FIT BORDER UNITS NEATLY AGAINST ABUTTING SURFACES. SCRIBE AND MILL RECESSED TEGULAR EDGE INTO PARTIAL BORDER UNITS SUPPORTED AT EDGE BY WALL MOLDING.

4. HOLD-DOWN CLIPS: INSTALL HOLD-DOWN CLIPS AT PANELS WITHIN 20 FEET OF AN EXTERIOR DOOR.

5. TOLERANCES:

5.1. VARIATION FORM FLAT AND LEVEL SURFACE: 1/8 INCH IN 10 FEET

5.2. VARIATION FROM PLUMB OF GRID MEMBERS CAUSED BY ECCENTRIC LOADS: TWO DEGREES MAXIMUM.

SECTION - 09650 - RESILIENT FLOORING

A. MATERIALS:

1. RESILIENT FLOORING:

1.1. TILE (T): AS SCHEDULED ON THE DRAWINGS.

2. LATEX UNDERLAYMENT: WHITE PREMIX LATEX FILLER, MIXED WITH WATER TO PRODUCE A CEMENTITIOUS PASTE.

3. PRIMERS AND ADHESIVES: TYPES AS RECOMMENDED BY RESILIENT FLOORING AND BASE MANUFACTURERS FOR SPECIFIC APPLICATION.

4. TRANSITION STRIPS:

4.1. COLORS TO BE STAINLESS

B. RESILIENT FLOORING INSTALLATION

B. PREPARATION: INSTALL SUBFLOOR FILLER TO FILL LOW SPOTS, CRACKS, CONSTRUCTION JOINTS, HOLES AND OTHER DEFECTS, AND AS REQUIRED TO ADJUST LEVEL TO MEET ADJACENT FINISHES. FEATHER TO MAXIMUM SLOPE OF 1/8 INCH IN 1 FOOT. LEAVE SMOOTH, FLAT, HARD SURFACE. PROHIBIT TRAFFIC OVER FILLER.

1. INSTALL RESILIENT FLOORING WHERE SCHEDULED IN ACCORDANCE WITH THE MANUFACTURER'S RECOMMENDATIONS.

2. UNLESS INDICATED OTHERWISE, INSTALL RESILIENT FLOORING WITH JOINTS AND SEAMS PARALLEL TO BUILDING LINES.

3. TERMINATE RESILIENT FLOORING AT CENTERLINE OF DOOR AT DOOR OPENINGS WHERE ADJACENT FLOOR FINISH IS DISSIMILAR, AND WHERE NO THRESHOLD IS INDICATED.

4. INSTALL EDGE STRIPS AT UNPROTECTED OR EXPOSED EDGES WHERE FLOORING TERMINATES.

5. SCRIBE FLOORING TO WALLS, COLUMNS, CABINETS, FLOOR OUTLETS AND OTHER APPURTENANCES TO PRODUCE TIGHT JOINTS.

6. CLEAN SUBSTRATE. SPREAD CEMENT EVENLY IN QUANTITY RECOMMENDED BY MANUFACTURER TO ENSURE ADHESION OVER ENTIRE AREA OF INSTALLATION. SPREAD ONLY ENOUGH ADHESIVE TO PERMIT INSTALLATION OF FLOORING BEFORE INITIAL SET.

7. SET FLOORING IN PLACE; PRESS WITH HEAVY ROLLER TO ENSURE FULL ADHESION.

D. SPECIAL REQUIREMENTS FOR RESILIENT TILE:

1. OPEN FLOOR TILE CARTONS, ENOUGH TO COVER EACH AREA, AND MIX TILE TO ENSURE SHADE VARIATIONS DO NOT OCCUR WITHIN ANY ONE AREA.

2. INSTALL TILES AS INDICATED ON THE DRAWINGS.

3. INSTALL WITH MINIMUM TILE WIDTH 1/2 FULL SIZE AT ROOM OR AREA PERIMETER, UNLESS INDICATED OTHERWISE.

4. ARRANGE TO SQUARE GRID PATTERN WITH ALL JOINTS ALIGNED, WITH PATTERN GRAIN ALTERNATING WITH ADJACENT UNIT TO PRODUCE BASKET WEAVE PATTERN WITH PATTERN GRAIN PARALLEL FOR ALL UNITS AND PARALLEL TO THE LENGTH OF THE ROOM.

E. SEAL JOINT BETWEEN FLOORING AND ADJACENT MATERIALS AT RESTROOMS, BATHROOMS, BREAKROOMS, AND OTHER MOIST AREAS WITH CLEAR SILICONE SEALANT.

F. SPECIAL PROTECTION REQUIREMENTS FOR INTERIOR RESILIENT TILE SURFACES

1. AREAS SUBJECT ONLY TO FOOT TRAFFIC: LAY DOWN NON-STAINING CURING PAPER LAPPED AND SEALED AT JOINTS AND EDGES WITH NASHUA BRAND DUCT TAPE. DO NOT USE POLYETHYLENE OR PRODUCTS CONTAINING BITUMINOUS MATERIALS.

2. AREAS SUBJECT TO ROLLING TRUCKS, DOLLIES AND OTHER EQUIPMENT: IN ADDITION TO THE ABOVE, SUCH AREAS SHALL BE FURTHER PROTECTED BY CONTINUOUS PLYWOOD OR HARDBOARD RUNWAYS. COORDINATE DESIGNATION OF SUCH AREAS.

SECTION 09651 - SELF - LEVELING UNDERLAYMENT (IF REQ'D.)

A. ULTRPLAN 1

HIGH PERFORMANCE, QUICK-SETTING - LEVELING UNDERLAYMENT
CONTACT MAPEI
NORTH AMERICAN HEADQUARTERS
1144 EAST NEWPORT CENTER DRIVE
DEERFEILD BEACH, FLORIDA 33442
PHONE (954) 246 8888
FAX: (954) 246 8800
WWW.mapei.com

SECTION - 09720 - WALLCOVERINGS

A. MATERIALS:

1. WALL COVERINGS: AS SCHEDULED ON THE DRAWINGS.

2. ADHESIVES: AS RECOMMENDED BY THE WALL COVERING MANUFACTURER.

3. ALL WALL COVERINGS SHALL HAVE A MAXIMUM FLAME SPREAD OF 75 OR LESS WHEN TESTED IN ACCORDANCE WITH ASTM E84. FIRE RETARDANT TREAT ALL NONCONFORMING WALL COVERING. TREATMENT SHALL NOT ALTER THE APPEARANCE OF THE FABRIC.

B. PREPARATION:

1. REMOVE ELECTRICAL OUTLET AND SWITCH PLATES, MECHANICAL DIFFUSERS, ESCUTCHEONS, REGISTERS, SURFACE HARDWARE, FITTINGS, AND FASTENINGS PRIOR TO STARTING WORK; STORE DURING AND REPLACE AFTER WORK.

2. AT EXISTING PAINTED SURFACES, EVENLY ROUGHEN WITH A MEDIUM GRIT GARNET PAPER, WASH WITH TSP, WIPE CLEAR WATER, ALLOW TO DRY, AND SIZE WITH WALL COVERING ADHESIVE.

C. INSTALLATION - WALL COVERING ON GYPSUM WALL BOARD:

1. MIX AND APPLY ADHESIVES IN STRICT ACCORDANCE WITH THE ADHESIVE MANUFACTURER'S DIRECTIONS FOR THE TYPE OF MATERIAL BEING APPLIED.

2. INSTALL WALL COVERING SECURE, SMOOTH, CLEAN, AND WITHOUT WRINKLES, GAPS OR OVERLAPS.

3. EXTEND WALL COVERING CONTINUOUSLY BEHIND SUCH ITEMS AS MIRRORS, AND OTHER ITEMS WHICH ARE CLOSE TO BUT NOT TOUCHING WALLS.

4. INSTALL WALL COVERING WHERE SCHEDULED IN STRICT ACCORDANCE WITH THE WALL COVERING MANUFACTURER'S RECOMMENDATIONS.

5. PROVIDE DOUBLE-CUT SEAMS ON NONMATCH PATTERNS; BUTT SEAMS ON MATCH PATTERNS.

6. HORIZONTAL SEAMS ARE NOT PERMITTED.

7. CORNER SEAMS: MAKE NO SEAMS WITHIN 6 INCHES OF AN INSIDE OR OUTSIDE CORNER, EXCEPT WHERE A COLOR OR PATTERN CHANGE IS INDICATED. LAP WALL COVERINGS AT INSIDE CORNER SEAMS TO PREVENT SUBSTRATE SHOW THROUGH.

8. FABRICS:

8.1. USE FABRIC ROLLS IN CONSECUTIVE NUMERICAL SEQUENCE OF MANUFACTURE.

8.2. PLACE FABRIC SECTIONS CONSECUTIVELY IN EXACT ORDER IN WHICH THEY ARE CUT FROM THE ROLL INCLUDING FILLING ALL SPACES ABOVE OR BELOW WINDOWS, DOORS, RELIGHTS, OR SIMILAR PENETRATIONS.

8.3. TRIM PATTERNED FABRICS WHICH ARE NOT FACTORY PRETRIMMED ON A WORK TABLE WITH A STRAIGHT EDGE AND AN INDUSTRIAL RAZOR BLADE FOR EXACT PATTERN MATCH.

9. INSTALL WALL COVERING SECURE, SMOOTH AND FREE OF WRINKLES, GAPS AND OVERLAPS.

D. CLEANUP

1. REPLACE ALL REMOVED WALL PLATES AND OTHER ACCESSORIES.

2. REPAIR TO LIKE-NEW CONDITION, OR REPLACE AS DIRECTED BY THE OWNER'S REPRESENTATIVE, ALL SURFACES DAMAGED BY WORK OF THIS SECTION.

E. EXCESS YARDAGE:

1. NOTIFY DESIGNATED OWNER'S REPRESENTATIVE AT THE SITE PRIOR TO REMOVING EXCESS YARDAGE FROM THE JOB. THE OWNER'S REPRESENTATIVE WILL SELECT THE MATERIALS WHICH ARE TO BE RETAINED BY THE OWNER.

2. CAREFULLY WRAP THE EXCESS YARDAGE SELECTED TO BE RETAINED. DELIVER TO A LOCATION ON SITE AS DIRECTED BY THE OWNER. REMOVE REMAINDER FROM THE SITE AND DISPOSE OF LEGALLY.

SECTION - 09775 - FIBERGLASS REINFORCED PLASTIC (FRP) PANEL WALL COVERING

A. SUMMARY: FIBERGLASS REINFORCED PLASTIC PANEL (FRP) WALL COVERING.

B. REFERENCES: AMERICAN SOCIETY FOR TESTING AND MATERIALS (ASTM): E84 - TEST METHOD FOR SURFACE BURNING CHARACTERISTICS OF BUILDING MATERIALS

C. DELIVERY, STORAGE AND HANDLING: COMPLY WITH REQUIREMENTS OF SECTION 01600.

D. ENVIRONMENTAL CONDITIONS

1. MAINTAIN A MINIMUM TEMPERATURE OF 60 DEGREES F AND RELATIVE HUMIDITY AS PRESCRIBED BY THE ADHESIVE MANUFACTURER, DURING INSTALLATION, AND UNTIL INSTALLED ADHESIVE IS FULLY CURED.

2. ALLOW NO CONTAINERS OF ADHESIVE TO BE OPENED UNTIL ALL POTENTIAL SOURCES OF FLAME OR SPARK HAVE BEEN SHUT DOWN OR EXTINGUISHED AND UNTIL WARNINGS AGAINST THEIR IGNITION DURING ADHESIVE APPLICATION HAVE BEEN POSTED.

3. PROVIDE VENTILATION TO DISPERSE FUMES DURING APPLICATION OF SOLVENT-BASED ADHESIVE.

E. PANEL SYSTEM COMPONENTS:

1. PANEL MATERIAL:

1.1. PANEL TYPE: FIBERGLASS REINFORCED POLYESTER PANELS, WITH EMBOSSED TEXTURED FACE.

1.2. THICKNESS: 3/32 INCH.

1.3. SIZE: 48 INCHES X LENGTH REQUIRED FOR CONDITIONS INDICATED.

1.4. FIRE RATING: MAXIMUM 25/450 FLAME SPREAD / SMOKE DEVELOPED IN ACCORDANCE WITH ASTM E84.

1.5. MANUFACTURER/TYPE: SEE FINISH LEGEND

2. MOLDINGS: MANUFACTURER'S STANDARD PVC CAP, CORNER, AND DIVISION MOLDINGS; COLOR TO MATCH PANELS. OMIT BOTTOM TRIM WHERE PANEL ABUTS FLASH COVED BASE.

3. PANEL AND MOLDING INSTALLATION ADHESIVE:

3.1. MARLITE BRAND C-551 CONSTRUCTION ADHESIVE.

3.2. FURNISH ADHESIVE SPREADERS WITH 3/16 INCH V-NOTCHES, 5/16 INCH APART FOR APPLICATION OF ADHESIVE TO PANELS.

1. SEALANT: FLEXIBLE WATERPROOF SEALANT FOR BEDDING PANEL EDGES, MARLITE BRAND SILICONE SEALANT MS 251 BY MARLITE, OR SILICONE SEALANT S255C BY KEMLITE COMPANY.

F. CONDITION OF SURFACES

1. SUBSTRATE: VERIFY THAT DRYWALL SUBSTRATE IS CLEAN, DRY, SOLID, STRAIGHT, AND FREE FROM PROJECTIONS.

2. WHERE CONDITIONS REQUIRE INSTALLATION OF PANELING PRIOR TO INSTALLATION OF FLOORING, COORDINATE WITH OTHER TRADES TO ESTABLISH ACCURATE LOCATION OF TOP OF BASE.

3. DO NOT START WORK UNTIL OTHER WORK REQUIRING PENETRATION OF WALL COVERING HAS BEEN COMPLETED, OR ACCURATELY LOCATED.

4. COMMENCEMENT OF PLASTIC PANELING WALL COVERING WORK CONSTITUTES INSTALLER'S ACCEPTANCE OF THE SUBSTRATE.

G. CUTTING AND FITTING

1. CUT PANELS ACCURATELY TO SIZE WITH PROPER ALLOWANCE FOR EXPANSION AND MOLDINGS.

2. SAND OR FILE ALL EDGES SMOOTH WITHOUT CHIPPING.

3. CUT OPENINGS FOR PENETRATIONS IN ACCURATE LOCATION WITH APPROXIMATE 1/8-INCH CLEARANCE AROUND PENETRATIONS.

H. INSTALLATION

1. ESTABLISH CENTERLINE OF EACH DISTINCT FLAT AREA TO BE COVERED. TRIM DIVISION MOLDINGS TO MATE WITH BASE MOLDINGS; INSTALL IN SOLID BED OF ADHESIVE, EITHER ON CENTERLINE, OR OFFSET 24 INCHES FROM CENTER, AS NECESSARY TO MAXIMIZE PANEL WIDTHS AT CORNERS. MOLDING SHALL BE INSTALLED STRAIGHT AND PLUMB.

2. CUT TOP CAP AND DIVISION OR CORNER MOLDINGS TO SHAPE, WITH EDGES TRIMMED TO FIT TO ADJACENT MOLDINGS.

3. APPLY SEALANT INTO INSTALLED MOLDINGS IN SEQUENCE WITH PANEL INSTALLATION.

4. APPLY ADHESIVE TO BACKS OF PANELS IN ACCORDANCE WITH THE MANUFACTURER'S RECOMMENDATIONS.

5. MAINTAIN LINES AND LEVELS OF PANEL EDGES AND MOLDINGS.

6. INSTALL PANELS TIGHT TO FLASH-COVED BASE TRIM.

7. ALLOW 1/8-INCH GAP BETWEEN TOP CAP, CORNER, OR DIVISION MOLDING POSTS, AND PANEL EDGE; ALL EDGES SHALL BE FIRMLY BEDDED TO THE MOLDINGS IN SEALANT.

8. PROMPTLY REMOVE SEALANT SQUEEZE OUT WITH A DAMP CLOTH, AS WORK PROGRESSES; REMOVE ADHESIVE WITH APPROPRIATE SOLVENT.

9. INSTALL SEALANT BEHIND FLANGES AND AT PENETRATIONS THROUGH PANELING, AND BETWEEN TOP CAP OF PANEL AND SUBSTRATE.

I. CLEANING

1. INSPECT SURFACES OF PANELING AND REMOVE EXCESS ADHESIVE FROM FACE OF LAMINATE USING SOLVENT RECOMMENDED BY MANUFACTURER.

2. PROMPTLY REMOVE UNUSED CUT PIECES FROM THE SITE.

3. PRIOR TO SUBSTANTIAL COMPLETION OF EACH AREA WHERE REINFORCED PLASTIC PANEL WALL COVERING IS INSTALLED, CLEAN ALL SURFACES OF PLASTIC PANELS, USING PROCEDURES RECOMMENDED BY THE MANUFACTURER.

PAUL DHANENS • ARCHITECT

ARCHITECT

LICENSED ARCHITECT
PAUL DHANENS
NO. C-23843
RENEWAL
STATE OF CALIFORNIA

5100 CALIFORNIA AVE. SUITE 107
BAKERSFIELD, CALIFORNIA 93309
TELEPHONE: (661) 326-8936
FACSIMILE: (661) 326-8937

CONSULTANT

COPYRIGHT

PAUL DHANENS ARCHITECT expressly reserves its copyright and other property rights in these documents which are not to be reproduced, changed or copied in any written, graphic or electronic form, nor assigned to any third party without the expressed written consent of PAUL DHANENS ARCHITECT.

NOTICE TO CONTRACTORS
Written dimensions on these drawings shall take precedence over scaled dimensions. Contractor shall verify and be responsible for confirming all dimensions and shall notify the architect immediately of any descripencies or field variations discovered.

PROJECT

TENANT IMPROVEMENT FOR

1966 WEST AVE L
LANCASTER, CA

DATE	ISSUED FOR
6-28-19	BUILDING DEPT SUBMITTAL

NO.	REVISIONS
1	
2	
3	
4	

SPECIFICATION

FILE NAME: 2366A6-0

SHEET

A-6.4

SECTION - 09820 - ACOUSTICAL INSULATION AND SEALANTS

A. MATERIALS:

1. ACOUSTIC INSULATION: ASTM C665, TYPE I; UNFACED MINERAL FIBER BATTS, BLANKETS, OR ROLLS; MINIMUM FIRE HAZARD CLASSIFICATION RATING OF 25/50 PER ASTM E84; MINIMUM 3-INCH THICK, UNLESS REQUIRED OTHERWISE TO MEET THE STC REQUIREMENTS INDICATED OR SPECIFIED; WIDTHS TO FRICTION-FIT BETWEEN STUDS, WHERE INDICATED FOR INSTALLATION IN STUD WALLS.

2. ACOUSTICAL SEALANT: NON-HARDENING, NON-SKINNING, FOR USE IN CONJUNCTION WITH GYPSUM BOARD; SIMILAR TO USG "ACOUSTICAL SEALANT."

3. SPRAYED FOAM: DOW CORNING "FIRE STOP 2001 SILICON FOAM" OR APPROVED.

4. PREFORMED FOAM FILLER: FOAM ASSEMBLIES AVAILABLE FROM THE METAL DECK MANUFACTURER THAT ARE PREFORMED TO FIT THE FLUTES IN THE METAL DECK.

5. ACCESSORIES: FURNISH OTHER ACCESSORIES SUCH AS FASTENERS AND RETAINERS, NOT SPECIFICALLY DESCRIBED, BUT REQUIRED FOR A COMPLETE INSTALLATION.

B. INSTALLATION:

1. INSTALL INSULATION IN ACCORDANCE WITH MANUFACTURER'S INSTRUCTIONS, AND AS INDICATED.

2. INSTALL INSULATION WITHOUT GAPS OR VOIDS.

3. TRIM INSULATION NEATLY TO FIT SPACES. USE INSULATION MATERIALS FREE OF DAMAGE.

4. ACOUSTICAL INSULATION AT CEILINGS:

4.1 LAY ACOUSTICAL INSULATION OVER EACH ACOUSTICALLY INSULATED PARTITION THAT TERMINATES AT THE CEILING. INSULATION SHALL EXTEND A MINIMUM OF 24" EACH SIDE OF THE CENTERLINE OF THE ACOUSTICAL PARTITION

4.2 ACOUSTICAL INSULATION BATTS SHALL BE TIGHTLY BUTTED.

4.3. CUT AND FIT NEATLY AROUND MECHANICAL AND SPRINKLER DROPS.

4.4. FILL SPACES BETWEEN WALL BATTS (AT TOP PLATE LINE) AND CEILING BATTS TO ENSURE COMPLETE SOUND CLOSURE.

4.5. OMIT INSULATION OVER TOPS OF RECESSED FLUORESCENT LIGHT FIXTURES; AND WITHIN 2 INCHES OF RECESSED INCANDESCENT FIXTURES.

5. SEALANT:

5.1 INSTALL ACOUSTICAL SEALANT AROUND PERIMETER OF ALL ACOUSTICALLY INSULATED PARTITIONS; ONE CONTINUOUS BEAD AT EACH SIDE OF FRAMING MEMBER INTERFACE WITH SUBSTRATE.

5.2 SEAL ALL PENETRATIONS THROUGH ACOUSTICAL ASSEMBLIES, EXCEPT FOR PENETRATIONS IN FIRE RATED CONSTRUCTION TO RECEIVE FIRESTOPPING.

6. PROVIDE PREFORMED FOAM FILLERS OR SPRAYED FOAM TO SEAL THE FLUTE OPENINGS WHERE ACOUSTICAL PARTITIONS ARE INSTALLED TIGHT TO METAL DECK ASSEMBLIES.

SECTION 09900 - PAINTING

A. DESCRIPTION OF WORK:

1. PREPARATION OF NEW AND EXISTING SURFACES. PERFORMANCE AND COMPLETION OF PAINTING AND FINISHING NEW AND EXISTING INTERIOR SURFACES, INCLUDING MECHANICAL AND ELECTRICAL WORK IN FINISHED SPACES. FINISH FOR FACTORY-PRIMED ITEMS.

2. EXCEPT AS OTHERWISE INDICATED, ALL NEW AND EXISTING SURFACES SHALL HAVE FINISH APPLIED TO THEM.

3. COLORS: SEE FINISH SCHEDULE FOR COLOR AND MANUFACTURER.

4. G.C. SHALL DO ALL TOUCHUP AT COMPLETION OF THE JOB WHERE OTHER TRADES HAVE MARRED THE PAINTED SURFACES. CLEAN PAINT DROPPING FROM HARDWARE, FLOOR, ETC.

B. MAINTENANCE MATERIALS:

LEAVE ONE UNOPENED GALLON OF EACH TYPE AND COLOR FOR MAINTENANCE PURPOSES. LABEL FOR POSITIVE IDENTIFICATION, INCLUDE DESIGNATION INDICATED ON COLOR SCHEDULE, DATE OF MIXING, AND CROSS REFERENCE MANUFACTURER USED.

C. PRODUCT DELIVERY, STORAGE, AND HANDLING:

1. DELIVERY OF MATERIAL: DELIVER IN SEALED CONTAINERS WITH MANUFACTURER'S ORIGINAL LABELS LEGIBLE AND INTACT.
2. STORAGE OF MATERIALS: STORE IN MANNER RECOMMENDED BY THE MANUFACTURER AND AS REQUIRED BY BUILDING CODE AND COMPLY WITH LOCAL HEALTH REGULATIONS.
3. HANDLING: TAKE ALL NECESSARY PRECAUTIONARY MEASURES TO PREVENT FIRE HAZARDS AND SPONTANEOUS COMBUSTION. PLACE COTTON WASH CLOTHS, AND OTHER HAZARDOUS MATERIALS IN CONTAINERS, AND REMOVE FROM SITE DAILY.

D. ENVIRONMENTAL CONDITIONS:

COMPLY WITH MANUFACTURER'S RECOMMENDATIONS AS TO ENVIRONMENTAL CONDITIONS UNDER WHICH COATING AND COATING SYSTEMS CAN BE APPLIED.

E. PROTECTION:

1. ADEQUATELY PROTECT OTHER SURFACES FROM DAMAGE. MAKE GOOD ANY DAMAGE CAUSED BY FAILURE TO PROVIDE SUITABLE PROTECTION.
2. REMOVAL OF HARDWARE AND MISCELLANEOUS ITEMS: REMOVE ELECTRICAL OUTLET AND SWITCH PLATES, MECHANICAL DIFFUSERS, ESCUTCHEONS, REGISTERS, SURFACE HARDWARE, FITTINGS, FASTENINGS, AND THE LIKE PRIOR TO STARTING WORK.
3. DROP CLOTHS: PROVIDE DROP CLOTHS, SHIELDS, AND PROTECTIVE EQUIPMENT. EXTEND PROTECTION TO SURFACES WITHIN PREPARATION AREAS.

F. GUARANTEE:

FURNISH TWO-YEAR WARRANTY FOR FULL VALUE OR WORK INCLUDED IN THIS SECTION.

D. MATERIALS:

1. PAINT, VARNISH, STAIN AND RELATED PRODUCTS FOR PRIME, INTERMEDIATE AND FINISHED COATS, TOP LINE PRODUCTION PRODUCTS OF THE FOLLOWING APPROVED MANUFACTURERS:

PER MANUFACTURER'S
LIST ON FINISH SCHEDULE

2. MATERIALS NOT SPECIFICALLY INDICATED, BUT REQUIRED, SUCH AS LINSEED OIL, SHELLAC, THINNERS, AND THE LIKE TO BE OF QUALITY NOT LESS THAN REQUIRED BY APPLICABLE FEDERAL OR STATE SPECIFICATION STANDARDS

3. ALL WORK"PREMIUM GRADE"

H. INSPECTION:

1. VERIFY SUBSTRATE SATISFACTORY FOR WORK OF THIS SECTION. DO NOT PROCEED UNTIL DEFECTS HAVE BEEN CORRECTED.

2. BY STARTING PAINTING; THE CONTRACTOR IMPLIES THAT HE HAS ACCEPTED THE SURFACES AS BEING FREE OF DEFECTS.

I. PREPARATION: NEW WORK

1. MISCELLANEOUS STEEL AND IRON, TO INCLUDE METAL DOORS AND FRAMES:

1.1 SURFACES SHOP-PRIMED: REMOVE ALL SURFACE CONTAMINATION FROM ALL SURFACES. AT FIELD-WELDED OR ABRADED SPOTS, APPLY A PHOSPHORIC ACID ETCH SOLUTION AND LET SET FOR THE TIME RECOMMENDED BY ACID ETCH MANUFACTURER, RINSE WITH WATER WHEN THOROUGHLY DRY, IMMEDIATELY APPLY PRIME COAT.

1.2 SURFACES NOT SHOP PRIMED: REMOVE RUST AND SCALE BY WIRE BRUSHING OR OTHER METHODS. REMOVE DUST, DIRT, OIL, GREASE; CLEAN SURFACE BY SOLVENT WASH; APPLY PHOSPHORIC ACID SOLUTION AND LET SET FOR TIME RECOM- MENDED BY ACID ETCH MANUFACTURER, RINSE WITH WATER WHEN THOROUGHLY DRY, IMMEDIATELY APPLY PRIME COAT.

2. WOOD PRODUCTS TO BE PAINTED: REMOVE SURFACE CONTAMINATION, DUST AND GRIT. SPOT COAT KNOTS, PITCH STREAKS AND SAPPY SECTIONS WITH SEALER. FILL IN NAIL HOLES AND FINE CRACKS AFTER PRIMER HAS DRIED AND SAND SMOOTH, LEVEL WITH SURFACE READY FOR FINISH COAT.

3. WOOD PRODUCTS TO BE STAINED: REMOVE SURFACE CONTAMINATION, DUST AND GRIT. AFTER STAIN COAT, FILL NAIL HOLES WITH MATCHING COLOR FILLER.

4. GYPSUM WALLBOARD:

4.1 REMOVE ANY MINOR SUBSEQUENT CONTAMINATION, DUST, AND DIRT.

4.2 IF SURFACE DEFECTS APPEAR AFTER PRIME COATING, NOTIFY JOB SUPERINTENDENT AND ARCHITECT.

REQUIRE DEFECTS TO BE REPAIRED BY AND AT EXPENSE OF DRYWALL TRADE. AFTER DEFECTS ARE CORRECTED, PROCEED WITH FINISH PAINTING, AGAIN USING PRIMER OVER REPAIRED AREAS.

D. PAINTING, AGAIN USING PRIMER OVER REPAIRED AREAS.

1. MECHANICAL AND ELECTRICAL WORK: PREPARE METAL SURFACES AS SPECIFIED HERE-IN ABOVE FOR MISCELLANEOUS STEEL AND IRON AS APPLICABLE TO TYPE OF MATERIAL SCHEDULED TO BE PAINTED. REMOVE DIRT, GREASE, AND OIL FROM CANVAS AND COTTON INSULATION COVERING.

J. PREPARATION: EXISTING WORK WHEN APPLICABLE

1. CLEAN TO EXTENT REQUIRED, AND OR REMOVE EXISTING COATINGS.

2. WOOD PRODUCTS TO BE PAINTED: THICK AND SHARP EDGES OF PAINT BUILD-UPS, RUNS, AND SAGS SHALL BE SANDED SMOOTH (FEATHERED EDGE). REPAIR AND SAND SMOOTH ALL SURFACE DEFECTS, INCLUDING UNSET/RESET NAILS, CRACKS AND GOUGES.

3. GYPSUM WALLBOARD: FILL, SAND SMOOTH ALL SURFACE DEFECTS.

K. APPLICATION:

1. APPLY PAINT OR FINISH BY METHODS GENERALLY ACCEPTED BY THE TRADE TO ACHIEVE APPROVED FINISHES.

2. COMPLY WITH RECOMMENDATIONS OF PRODUCT MANUFACTURER FOR DRYING TIME BETWEEN SUCCEEDING COATS.

3. VARY COLOR OF SUCCESSIVE UNDERCOATS.

4. SAND AND DUST BETWEEN EACH COAT TO REMOVE DEFECTS VISIBLE FROM A DISTANCE OF 5 FEET.

5. G.C. SHALL PAINT WALL SURFACES INDICATED ON PLANS USING A MINIMUM OF TWO COATS OF PAINT AND PRIME WHERE RECOMMENDED. BY PAINT MANUFACTURER.

6. ALL PAINT WORK SHALL BE FIRST QUALITY WITH NO DEFECTS

7. DRYWALL PAINT SHOULD BE APPLIED BY ROLLER. PAINT APPLIED TO WOOD SHALL BE BRUSHED ON. EXPOSED CEILING COMPONENTS TO BE SPRAYED.

L. FINISH SCHEDULE:

1. INTERIOR FINISH SYSTEM 1: GYPSUM WALLBOARD CEILING
(1) COAT LATEX PRIMER
(2) COATS INTERIOR LATEX, FLAT FINISH

2. INTERIOR FINISH SYSTEM 2: GYPSUM WALLBOARD WALLS
(1) COAT LATEX PRIMER
(2) COATS INTERIOR LATEX, SATIN FINISH

3. INTERIOR FINISH SYSTEM 3: DOORS AND TRIM
(1) COAT LATEX PRIMER
(2) COATS INTERIOR LATEX, SEMI-GLOSS FINISH

4. DAMAGED FINISHES INCLUDING PREFINISHED OWNER FURNISHED WHERE A TRANSPARENT CLASS B FINISH IS REQUIRED, USE:

ALBERT "DS CLEAR" FIRE RETARDANT COATING AND OVERCOATER "66-H" MATTE OR SEMI-GLOSS FINISH. (SEE SECTION 7250 FIRE RETARDANT COATINGS)

5. WHERE A TRANSPARENT CLASS A FINISH IS REQUIRED, USE: ALBERT "DS CLEAR" FIRE RETARDANT COATING AND OVERCOATER "66-H" MATTE OR SEMI-GLOSS FINISH. (SEE SECTION 7250 FIRE RETARDANT COATINGS)

ITEMS:
PREPARE AND REFINISH AS SPECIFIED AND SCHEDULED FOR WORK. ALL THE ABOVE SURFACES MAY NOT BE ENCOUNTERED DURING THE COURSE OF THIS PROJECT.

SECTION - 10400 - SIGNAGE

A. SECTION INCLUDES

1. PLASTIC SIGNAGE

2. VINYL SIGNAGE

B. REFERENCES

1. AMERICAN WITH DISABILITIES ACT ACCESSIBILITY GUIDELINES (ADAAG) - LATEST EDITION.

2. AMERICAN NATIONAL STANDARDS INSTITUTE (ANSI) A117.1, LATEST EDITION.

C. PLASTIC SIGNAGE:

1. MATERIALS:

1.1 PLASTIC SHEET: 1/8 INCH THICK ACRYLIC SHEET; BLUE; LOW GLOSS FINISH.

1.2 ADHESIVE MOUNTING TAPE: 3M "SCOTCH BRAND #665" DOUBLE-STICK, DOUBLE-COATED TAPE, 1/4" WIDE.

1.3. RAISED LETTERING: HELVETICA MEDIUM TYPEFACE; WHITE COLOR; 1 INCH HEIGHT; 1/32 INCH RELIEF; SELF-ADHESIVE.

1.4. BRAILLE: ANSI GRADE 1, SELF-ADHESIVE; COLOR TO MATCH ACRYLIC SHEET.

1.5. PICTOGRAMS: ANSI COMPLIANT; SELF-ADHESIVE.

2. DIMENSIONS: 4-1/2 INCHES HIGH, WITH WIDTH DETERMINED BY SPECIFIED TEXT; MINIMUM 3/4 INCH BORDER UNLESS INDICATED OTHERWISE; 1/2 INCH RADIUS CORNERS.

3. SIGNS:

3.1 FOR EACH TOILET ROOM DOOR: "MEN" OR "WOMEN" AS APPROPRIATE; BLUE WITH WHITE LETTERS; ACCOMPANIED WITH GRADE 2 BRAILLE SYMBOL; OVERALL SIGN TO BE 2-1/2 INCH HIGH BY LENGTH REQUIRED.

3.2 FOR EACH TOILET ROOM DOOR: INTERNATIONAL SYMBOL OF ACCESSIBILITY: NOMINAL 3 INCHES BY 3 INCHES; STANDARD BLUE AND WHITE.

D. VINYL SIGNS:

1. TYPE: PRESSURE SENSITIVE ADHESIVE BACK; MACHINE BLADE CUT; CUSTOM COLORS AS SCHEDULED.

1.1 TEXT: AS SCHEDULED BELOW.

1.2 STYLE/SIZE: HELVETICA MEDIUM; 1" HIGH, UNLESS OTHERWISE INDICATED.

1.3. SUBMIT SIGN FOR APPROVAL.

2. SCHEDULE:

2.1 SUITE NUMBERS: 3" HIGH INDIVIDUAL LETTERS; TEXT AND COLOR AS DIRECTED BY OWNER'S REPRESENTATIVE AND LANDLORD REQUIREMENTS.

01. AT ENTRY DOORS IN IBC JURISDICTIONS: "THIS DOOR TO REMAIN UNLOCKED DURING BUSINESS HOURS;" SINGLE SIGN AT EACH ENTRY; SIZE AS REQUIRED; PROVIDE LETTERS IN COLOR WHICH CONTRAST DISTINCTLY FROM BACKGROUND (FRAME) COLOR.

02. AT ENTRY DOORS IN OTHER JURISDICTIONS: WORDING AS INDICATED, OR VERIFY WITH LOCAL CODE AUTHORITY FOR CORRECT WORDING OF SIGN IF WORDING NOT INDICATED; PROVIDE LETTERS IN COLOR WHICH CONTRAST DISTINCTLY FROM BACKGROUND (FRAME) COLOR.

03. "EMERGENCY EXIT ONLY" ON REAR EXTERIOR DOOR (WHERE APPLIES); BLUE WITH WHITE LETTERS; MOUNT AT +66" AFF.

E. FABRICATION:

1. SIGNS SHALL BE FREE OF ROUGH EDGES, IRREGULAR SURFACES, NON-UNIFORM FINISHES, AND OTHER DEFECTS.

2. PROVIDE PICTOGRAMS WITH ACCURATE COLOR MATCH WITH RAISED LETTERING.

3. APPLY ADHESIVE PICTOGRAMS AND RAISED LETTERING CAREFULLY, IN ACCURATE ALIGNMENT.

F. INSTALLATION OF PLASTIC SIGNAGE:

1. CLEAN SURFACES TO RECEIVE SIGNAGE.

2. INSTALL SIGNAGE AS REFERENCED IN THE GRAPHICS SCHEDULE AND OTHER ITEMS AS SPECIFIED BELOW.

3. GRAPHICS SHALL BE MOUNTED LEVEL, AND PLUMB.

4. APPLY SIGNAGE WITH TOP EDGE LOCATED 60 INCHES ABOVE THE FINISH FLOOR SURFACE UNLESS INDICATED OTHERWISE. USE SPECIFIED ADHESIVE MOUNTING TAPE; THE TAPE SHALL NOT BE VISIBLE IN THE INSTALLED POSITION.

G. INSTALLATION OF VINYL SIGNS:

1. ADHERE BY REMOVING PROTECTIVE BACKING SHEET AND PRESSING FIRMLY TO SURFACE, FOLLOWING ACCURATE SPACING.

2. REMOVE ALL RESIDUE AROUND LETTERS, WIPE CLEAN.

H. CLEANUP:

1. TAKE PRECAUTIONS TO ASSURE ADJACENT SURFACES REMAIN FREE FROM DUST, AND ADHESIVE.

2. IMMEDIATELY CLEAN SURFACES THAT BECOME SOILED DURING INSTALLATION OF THE LETTERS.

3. UPON INSTALLATION, CLEAN THE LETTERS AND PIN MOUNTS OF DUST WITH A DAMP CLOTH, TAKING CARE NOT TO DAMAGE UNDERLYING SURFACES.

4. LEAVE THE INSTALLATION CLEAN, AND COMPLETELY FREE OF FOREIGN MATERIAL THAT WOULD DETRACT FROM VISUAL APPEARANCE OF THE LETTERS.

SECTION - 10810 TOILET ACCESSORIES

A. DELIVERY, STORAGE AND HANDLING

1. DO NOT DELIVER ACCESSORIES TO SITE UNTIL ROOMS IN WHICH THEY ARE TO BE INSTALLED ARE READY TO RECEIVE THEM.

2. PACK ACCESSORIES INDIVIDUALLY IN A MANNER TO PROTECT ACCESSORY AND ITS FINISH.

B. GENERAL:

1. PROVIDE ACCESSORIES AS MANUFACTURED BY BOBRICK WASHROOM EQUIPMENT COMPANY UNLESS OTHERWISE INDICATED, IN QUANTITIES INDICATED ON THE DRAWINGS.

2. ALL PRODUCTS SHALL BE SATIN STAINLESS STEEL, UNLESS OTHERWISE INDICATED.

C. PRODUCTS IN RESTROOMS AS SPECIFIED IN DRAWINGS

D. PREPARATION:

1. DELIVER INSERTS AND ROUGH-IN FRAMES TO JOB SITE AT APPROPRIATE TIME FOR BUILDING-IN.

2. FURNISH TEMPLATES AND ROUGH-IN MEASUREMENTS AS REQUIRED.

3. BEFORE STARTING WORK NOTIFY OWNER'S REPRESENTATIVE IN WRITING OF CONFLICTS DETRIMENTAL TO INSTALLATION OR OPERATION OF UNITS.

4. PROTECT ADJACENT OR ADJOINING FINISHED SURFACES FROM DAMAGE DURING INSTALLATION OF WORK OF THIS SECTION.

5. VERIFY EXACT LOCATION OF ACCESSORIES.

E. INSTALLATION:

1. INSTALL FIXTURES, ACCESSORIES AND ITEMS IN ACCORDANCE WITH MANUFACTURER'S INSTRUCTIONS AND ADAAG/ANSI STANDARDS.

2. INSTALL TRUE, PLUMB, AND LEVEL, SECURELY AND RIGIDLY ANCHORED TO SUBSTRATE.

3. USE TAMPER-PROOF FASTENERS.

SECTION - 10999 - MISCELLANEOUS

A. CORNER GUARDS:

1. CLEAR POLYCARBONATE ANGLE, 1/8" THICK X 2-1/2" X 2-1/2" X 4'-0" LONG. TRI-GUARDS, INC. TG4212, OR APPROVED; FURNISH WITH PREDRILLED COUNTERSUNK MOUNTING HOLES AND CHROME PLATED OVAL HEAD MOUNTING SCREWS.

2. INSTALLATION: AS INDICATED ON THE DRAWINGS; SET BOTTOM OF CORNER GUARD FLUSH WITH TOP OF WALL BASE.

B. FIRE EXTINGUISHER DRY CHEMICAL TYPE - ABC MULTIPURPOSE TYPE:

1. TYPE: STANDARD FIRE-WEST MODEL ABC-5, POTTER-ROEMER MODEL NO. 3005, LARSEN'S MANUFACTURING COMPANY MODEL MP5, J.L. INDUSTRIES COSMIC 5E, OR APPROVED.

2. 5 LB. CAPACITY, UL RATED 2A-10BC, APPROXIMATELY 4-1/2 INCH DIAMETER X 14 INCHES HIGH, BAKED ENAMEL STEEL SHELL.

3. AGENT: AMMONIUM PHOSPHATE BASE.

4. LOCATION: PROVIDE AT ALL FIRE EXTINGUISHER AND FIRE EXTINGUISHER CABINET LOCATIONS, UNLESS NOTED OTHERWISE.

C. FIRE EXTINGUISHER CABINETS (FEC): POTTER-ROEMER, INC. #1023-DV, LARSEN'S MANUFACTURING COMPANY #2409-R3-VD, J.L. INDUSTRIES #1817-V-10; SEMI-RECESSED; WHITE BAKED ENAMEL INTERIOR AND DOOR.

PAUL DHANENS • ARCHITECT

ARCHITECT

LICENSED ARCHITECT
PAUL DHANENS
NO. C-23843
RENEWAL
STATE OF CALIFORNIA

5100 CALIFORNIA AVE. SUITE 107
BAKERSFIELD, CALIFORNIA 93309
TELEPHONE: (661) 326-8936
FACSIMILE: (661) 326-8937

CONSULTANT

COPYRIGHT

PAUL DHANENS ARCHITECT expressly reserves its copyright and other property rights in these documents which are not to be reproduced, changed or copied in any written, graphic or electronic form, nor assigned to any third party without the expressed written consent of PAUL DHANENS ARCHITECT.

NOTICE TO CONTRACTORS
Written dimensions on these drawings shall take precedence over scaled dimensions. Contractor shall verify and be responsible for confirming all dimensions and shall notify the architect immediately of any descripencies or field variations discovered.

PROJECT

TENANT IMPROVEMENT FOR

1966 WEST AVE L
LANCASTER, CA

DATE	ISSUED FOR
6-28-19	BUILDING DEPT SUBMITTAL

NO.	REVISIONS
1	
2	
3	
4	

SPECIFICATION

FILE NAME: 2366A6-0

SHEET

A-6.5

TENANT IMPROVEMENT FOR

STEAK 'N SHAKE
RESTAURANT AND DRIVE-THRU

1966 WEST AVE 'L', LANCASTER, CA 93534

SITE INFORMATION

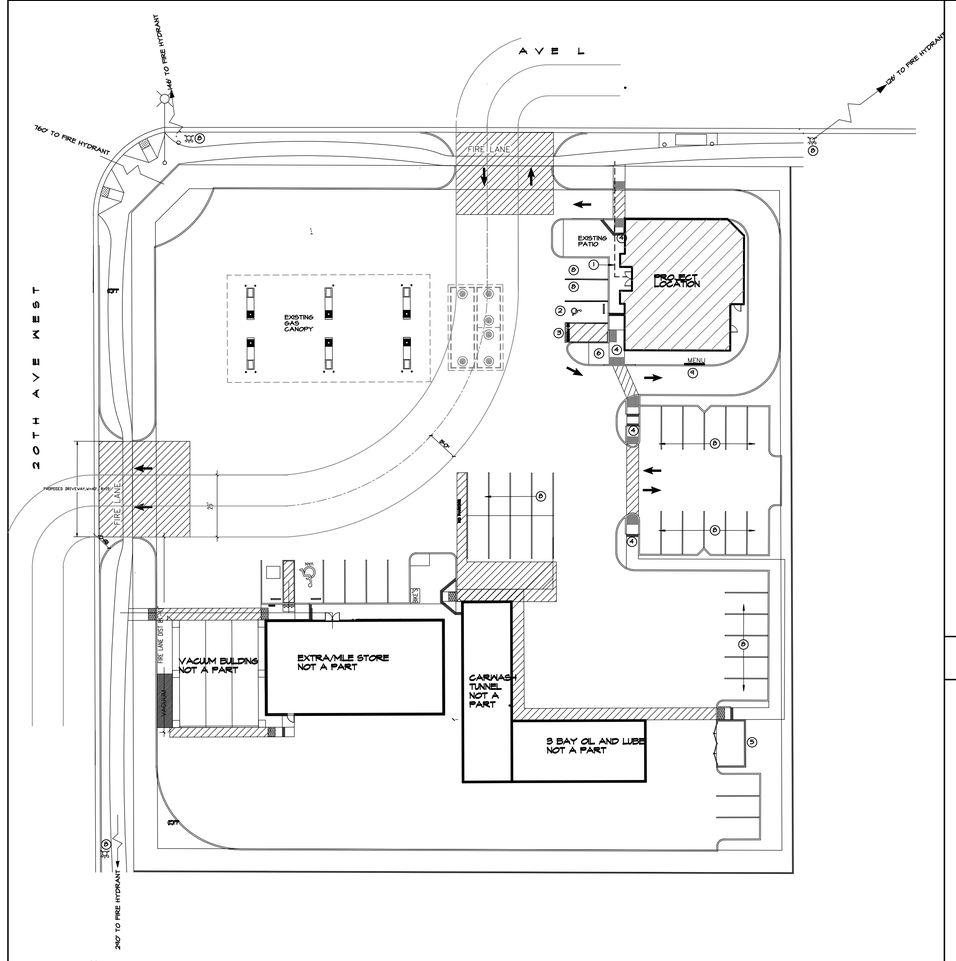

N

SITE PLAN

30'

KEYNOTES

1. EXISTING PATH OF TRAVEL TO PUBLIC RIGHT OF WAY
2. EXISTING 9'-0"x 18'-0" HANDICAP PARKING STALL WITH 3'-0"x3'-0" PAINTED STALL SIGN AND TO SQ IN POLE MOUNTED PARKING SIGN DISPLAYING THE INTERNATIONAL SYMBOL OF ACCESSIBILITY WITH AN ADDITIONAL SIGN OR LANGUAGE STATING "MINIMUM FINE $250.00" INCLUDE SIGN MOUNTED BELOW STATING "VAN ACCESSIBLE" WHERE APPROPRIATE PER CBC SECTION 11.2.4B-80" MINIMUM HEIGHT TO THE BOTTOM OF ALL POLE SIGNS
3. EXISTING MIN 5'-0" WIDE HANDICAP ACCESS AISLE FOR VAN ACCESS WITH THE WORDS "NO PARKING" IN 12" HIGH CONTRASTING LETTERS- SLOPE NOT TO EXCEED 1/4 :12
4. EXISTING MIN 4'-0" WIDE HANDICAP ACCESSIBLE CURB RAMP- SLOPE SHALL NOT EXCEED 1:20 WITH 4'-0" MINIMUM LANDING AT TOP AND 1'-0" BORDER OF 1/4" WARNING GROOVES AT TOP PER CBC STANDARDS- PROVIDE RAISED TRUNCATED DOME TILES FOR THE FULL WIDTH OF BOTTOM LANDING PER CITY STANDARDS
5. EXISTING TRASH ENCLOSURE
6. EXISTING SHORT TERM 34" HIGH x 24" WIDE INVERTED U-STYLE LOOP BICYCLE PARKING RACKS
7. EXISTING FIRE HYDRANT
8. EXISTING PARKING STALLS
9. MENU BOARD - SEE DETAIL 1/A-1.0

PROJECT ANALYSIS

APPLICABLE CODES:
2016 CBC / 2016 CMC / 2016 CPC / 2016 CEC / 2016 CFC

SITE ADRESS:	1966 WEST AVE 'L' LANCASTER, CA 93534
APN #:	3104-014-003
BUILDING DATA	
EXISTING BUILDING/AREA OF IMPROVEMENT	2,684 S.F.
FIRE SPRINKLER	NO
OCCUPANCY	A-2

OCCUPANT LOAD

AREA	SQUARE FOOTAGE	# OF OCCUPANT
WALK-IN COOLER/STOR	184 SF	1 OCCUPANT
BOH	752 SF	8 OCCUPANTS
DINING	1,230 SF	73 SEATS
TOTAL OCCUPANT LOAD		82 OCC

EXITS REQUIRED	2
EXIT WIDTH REQUIRED (82 X .2)	16.4"
EXITS PROVIDED	3
EXIT WIDTH PROVIDED	144"

PARKING DATA

EXISTING CENTER NO CHANGE TO PARKING

BIKE PARKING PROVIDED BY ORIGINAL DEVELOPER

SHEET INDEX

T-1.0	TITLE SHEET
A-1.0	FLOOR PLAN
A-2.0	REFLECTED CEILING PLAN
A-3.0	FINISH PLAN
A-4.0	FURNITURE PLAN
A-5.0	DETAILS
A-6.0	SPECIFICATIONS
A-6.1	SPECIFICATIONS
A-6.2	SPECIFICATIONS
A-6.3	SPECIFICATIONS
A-6.4	SPECIFICATIONS
A-6.5	SPECIFICATIONS
P-1.0.1	PLUMBING PLAN - DGN, DHW
P-1.0.2	PLUMBING PLAN - SOIL WASTE & VENT
P-1.0.3	PLUMBING PLAN - GAS AND CONDENSATE
P-1.0.4	PLUMBING PLAN - ROOF
P-3.0.0	PLUMBING PLAN - FIXTURE SCHEDULE
P-3.0.1	PLUMBING PLAN - SCHEDULES
P-4.0.0	PLUMBING PLAN - DETAILS
P-4.0.1	PLUMBING PLAN - DETAILS
P-5.0.0	PLUMBING PLAN - PLUMBING NOTES
P-5.0.1	PLUMBING PLAN - PLUMBING NOTES
P-5.0.2	PLUMBING PLAN - PLUMBING NOTES
P-5.0.3	PLUMBING PLAN - PLUMBING NOTES
M-1.0.1	MECHANICAL PLAN
M-1.0.2	MECHANICAL ROOF PLAN
M-2.0.1	MECHANICAL SCHEDULE
M-3.0.1	MECHANICAL NOTES
M-3.0.2	MECHANICAL NOTES
E-1.0.1	ELECTRICAL LIGHTING PLAN
E-1.0.2	ELECTRICAL POWER AND SIGNAL PLAN
E-3.0.1	ELECTRICAL ROOF
E-4.0.1	ELECTRICAL LIGHTING CONTROL
E-5.0.1	ELECTRICAL PANEL SCHEDULE
E-5.0.2	ELECTRICAL DETAIL
E-6.0.1	ELECTRICAL NOTES
E-6.0.2	ELECTRICAL NOTES
E-6.0.3	ELECTRICAL NOTES
T-24	TITLE 24
FS-1.0	KITCHEN EQUIPMENT PLAN
FS-2.0	KITCHEN EQUIPMENT SCHEDULE
FS-3.0	KITCHEN EQUIPMENT ELECTRICAL
FS-4.0	KITCHEN EQUIPMENT PLAN
FS-5.0	KITCHEN EQUIPMENT PLAN
FS-5.1	KITCHEN HOOD SHOP DRAWINGS
FS-5.2	KITCHEN HOOD SHOP DRAWINGS
FS-5.3	KITCHEN HOOD SHOP DRAWINGS
FS-5.4	KITCHEN HOOD SHOP DRAWINGS
FS-5.5	KITCHEN HOOD SHOP DRAWINGS
FS-5.6	KITCHEN HOOD SHOP DRAWINGS
FS-5.7	KITCHEN HOOD SHOP DRAWINGS
FS-5.8	KITCHEN HOOD SHOP DRAWINGS
FS-5.9	KITCHEN HOOD SHOP DRAWINGS
FS-5.10	KITCHEN HOOD SHOP DRAWINGS
FS-6.0	KITCHEN SPECIAL CONDITIONS
FS-6.1	KITCHEN WALK IN COOLER AND FREEZER
FS-7.0	KITCHEN CRITICAL DIMENSION PLAN
FS-8.0	EQUIPMENT ELEVATIONS
FS-9.0	KITCHEN GENERAL NOTES

CALIFORNIA GREEN CODE NOTES

1. CONTRACTOR SHALL SUBMIT A CONSTRUCTION WASTE MANAGEMENT PLAN FOR APPROVAL BY THE ENFORCEMENT AGENCY THAT:
   A. IDENTIFIES THE MATERIALS TO BE DIVERTED FROM DISPOSAL BY EFFICIENT USAGE, RECYCLING, REUSE ON THE PROJECT OR SALVAGE FOR FUTURE USE OR SALE.
   B. DETERMINES IF MATERIALS WILL BE SORTED ON-SITE OR MIXED.
   C. IDENTIFIES DIVERSION FACILITIES WHERE MATERIAL COLLECTED WILL BE TAKEN.
   D. SPECIFIES THAT THE AMOUNT OF MATERIALS DIVERTED SHALL BE CALCULATED BY WEIGHT OR VOLUME, BUT NOT BY BOTH.

   DOCUMENTATION SHALL BE PROVIDED TO THE ENFORCING AGENCY WHICH DEMONSTRATES COMPLIANCE WITH SECTION 5.408.2, ITEMS 1 THRU 4. THE WASTE MANAGEMENT PLAN SHALL BE UPDATED AS NECESSARY AND SHALL BE ACCESSIBLE DURING CONSTRUCTION FOR EXAMINATION BY THE ENFORCING AGENCY (PER CGBSC 2016, DIVISION 5.408.2)
2. RECYCLE AND/OR SALVAGE FOR REUSE A MINIMUM OF 65 PERCENT OF THE NON-HAZARDOUS CONSTRUCTION AND DEMOLITION DEBRIS, OR MEET A LOCAL CONSTRUCTION AND DEMOLITION WASTE MANAGEMENT ORDINANCE, WHICHEVER IS MORE STRINGENT. CALCULATE THE AMOUNT OF MATERIALS DIVERTED BY WEIGHT OR VOLUME, BUT NOT BY BOTH. THE EXCEPTIONS ARE EXCAVATED SOIL AND LAND- CLEARING DEBRIS OR ALTERNATE WASTE REDUCTION METHODS DEVELOPED BY WORKING WITH LOCAL AGENCIES IF DIVERSION OR RECYCLE FACILITIES CAPABLE OF COMPLIANCE WITH THIS ITEM DO NOT EXIST (PER CGBSC 2016, DIVISION 5.408.3)
3. PROVIDE READILY ACCESSIBLE AREAS THAT SERVE THE ENTIRE BUILDING AND ARE IDENTIFIED FOR THE DEPOSITING, STORAGE AND COLLECTION OF NON-HAZARDOUS MATERIALS FOR RECYCLING, INCLUDING (AT A MINIMUM) PAPER, CORRUGATED CARDBOARD, GLASS, PLASTICS AND METALS (PER CGBSC 2016, DIVISION 5.410.1)
4. THE HVAC SYSTEM SHALL BE TESTED PER THE MANUFACTURER'S INSTALLATION INSTRUCTIONS TO ENSURE EQUIPMENT IS FUNCTIONING PROPERLY. TESTS SHALL INCLUDE BUT ARE NOT LIMITED TO VISUAL INSPECTION OF FURNACE FIRE, AMP READING OF MOTOR TO ENSURE PROPER SETTING, TEMPERATURE SET POINT VERIFICATION TO ENSURE COOLING OPERATION, AIR BALANCE OF DUCT SYSTEM TO ENSURE PROPER AIR FLOW PER AC UNIT MANUFACTURER AND TO MATCH CONSTRUCTION DOCUMENTS.
5. THE HVAC THERMOSTAT SHALL BE INSPECTED AND TESTED TO ENSURE PROPER OPERATION. TESTS SHALL INCLUDE BUT ARE NOT LIMITED TO PROGRAMMING, AND SET TEMPERATURES FOR COOLING AND HEATING.
6. THE INDOOR AND OUTDOOR LIGHTING AND CONTROL SYSTEMS SHALL BE INSPECTED AND TESTED TO ENSURE PROPER INSTALLATION AND OPERATION. TESTS SHALL INCLUDE BUT ARE NOT LIMITED TO VISUAL INSPECTION OF ALL FIXTURES TO ENSURE CONFORMANCE TO SPECIFICATIONS LISTED IN THE APPROVED CONSTRUCTION DOCUMENTS AND MANUFACTURER'S RECOMMENDED INSTALLATION INSTRUCTIONS.
7. THE WATER HEATING SYSTEM SHALL BE INSPECTED AND TESTED TO ENSURE PROPER OPERATION. TESTS SHALL INCLUDE BUT ARE NOT LIMITED TO VISUAL INSPECTION FOR LEAKS, SET POINT AND VERIFICATION OF TEMPERATURE.
8. ALL BUILDING SYSTEMS TESTING AND ADJUSTING PROCEDURES SHALL BE PERFORMED IN ACCORDANCE WITH INDUSTRY BEST PRACTICES AND APPLICABLE STANDARDS ON EACH SYSTEM AS DETERMINED BY THE BUILDING OFFICIAL.
9. UPON COMPLETION OF CONSTRUCTION CONTRACTOR SHALL PROVIDE THE BUILDING OWNER OR REPRESENTATIVE WITH DETAILED OPERATING AND MAINTENANCE INSTRUCTIONS AND COPIES OF GUARANTEES/WARRANTIES FOR EACH SYSTEM. OPERATION AND MAINTENANCE INSTRUCTIONS SHALL BE CONSISTENT WITH OSHA REQUIREMENTS IN CCR, TITLE 8, SECTION 5142, AND OTHER RELATED REGULATIONS. INCLUDE A COPY OF ALL INSPECTION VERIFICATIONS AND REPORTS REQUIRED BY THE ENFORCING AGENCY.

PLUMBING FIXTURE COUNT

DINING AREA (1/30)	1,230 SF	41 OCC
BOH/OFFICE (1/200)	752 SF	4 OCC
WALK - IN(1/200)	184 SF	1 OCC
TOTAL		46 OCC

LESS THAN 50 OCCUPANTS ONLY ONE FIXTURE REQUIRED FOR EACH SEX
CPC TABLE 422.1 NOTE #3

GENERAL NOTES

1. VERIFY, AT SITE, ALL EXISTING CONDITIONS PRIOR TO CONSTRUCTION.
2. EQUIPMENT AND ITEMS INDICATED AS NOT BEING INCLUDED IN THE CONTRACT(N.I.C.) SHALL BE VERIFIED WITH THE OWNER'S REPRESENTATIVE AS TO SIZE, SHAPE AND UTILITY REQUIREMENTS TO INSURE COMPLETE AND PROPER INSTALLATION AND OPERATION.
3. ALL MANUFACTURED MATERIAL, EQUIPMENT, AND SYSTEMS SHALL BE INSTALLED AS DIRECTED BY THE MANUFACTURER UNLESS SPECIFIED TO THE CONTRARY AND ONLY THEN IS SUCH CONFLICT IS FIRST VERIFIED WITH THE ARCHITECT IN WRITING.
4. WRITTEN DIMENSIONS SHALL HAVE PRECEDENCE OVER SCALED DIMENSIONS.
5. IN THE EVENT OF CONFLICTING STATEMENTS OR REQUIREMENTS, NOTIFY THE ARCHITECT IN SUFFICIENT TIME TO PERMIT THE ISSUANCE OF WRITTEN CLARIFICATION.
6. ALL WORK SHALL BE IN COMPLIANCE WITH ALL APPLICABLE CODES AND ORDINANCES.
7. POST BUILDING ADDRESS PER FIRE DEPARTMENT REQUIREMENTS. VERIFY EXACT LOCATION WITH ARCHITECT.

DEFERRED SUBMITTALS

1. A SITE DEVELOPMENT PERMIT IS REQURED FOR ANY EXTERIOR SIGNAGE INSTALLED

PAUL DHANENS • ARCHITECT

ARCHITECT

LICENSED ARCHITECT PAUL DHANENS NO. C-23843 RENEWAL STATE OF CALIFORNIA

5100 CALIFORNIA AVE, SUITE 107
BAKERSFIELD, CALIFORNIA 93309
TELEPHONE: (661) 326-8936
FACSIMILE: (661) 326-8937

CONSULTANT

COPYRIGHT

PAUL DHANENS ARCHITECT expressly reserves its copyright and other property rights in these documents which are not to be reproduced, changed or copied in any written, graphic or electronic form, nor assigned to any third party without the expressed written consent of PAUL DHANENS ARCHITECT.

NOTICE TO CONTRACTORS
Written dimensions on these drawings shall take precedence over scaled dimensions. Contractor shall verify and be responsible for confirming all dimensions and shall notify the architect immediately of any discrepancies or field variations discovered.

PROJECT

TENANT IMPROVEMENT FOR

1966 WEST AVE L
LANCASTER, CA

DATE	ISSUED FOR
6-28-17	BUILDING DEPT SUBMITTAL

NO.	REVISIONS
1	
2	
3	
4	

TITLE SHEET

FILE NAME: 2366T1-0

SHEET

T-1.0

LUMINAIRE SCHEDULE

MARK	DESCRIPTION	MANUFACTURER	CATALOG NUMBER	LAMP SPECIFICATION (SEE GENERAL NOTE A) LAMP QUAN	LAMP DESCRIPTION	LAMP TYPE	VOLTS	VA LOAD	MOUNTING CEILING RECESSED	CEILING SURFACE	CEILING SUSPENDED	WALL RECESSED	WALL SURFACE	GRADE FLUSH	GRADE STANCHION	POLE	COVE	UNDERCABINET	REMARKS
L1	14" WAREHOUSE SHADE (PENDANT MOUNT)	HI-LITE MFG	H-15114-CORD WITH 18/LED2/2700K/E/D/BCM/M	1	INCLUDED	LED	120	21			X								CORD SUSPENDED
L2	TRACK SPOTLIGHT (CEILING MOUNT)	COOPER LIGHTING/HALO	LZR1320-MB	1	LR20/25/27K/975/BK	LED	120	12		X									
L3	2 X 2 TROFFER	EATON/METALUX	22GR-LD4-32-F1-UNV-L830-CD1-G2-U	–	INCLUDED	LED	120/277	34	X										
L4	6" CAN LIGHTING	ACUITY LIGHTING/JUNO	IC2/J6RLEG4-27K-9-WH	–	INCLUDED	LED	120	16	X										
L5	2 X 4 TROFFER	EATON/METALUX	24GR-LD4-48-F1-UNV-L830-CD1-G2-U	–	INCLUDED	LED	120/277	45	X										
L6	2 X 4 TROFFER (EMERGENCY)	EATON/METALUX	24GR-LD4-48-F1-UNV-EL14W-L830-CD1-G2-U	–	INCLUDED	LED	120/277	45	X										
L7	DECORATIVE LAMPS	HATCO	DLH-500RL	1	COATED CLEAR DLH	HAL	120	375			X								
DC	EMERGENCY LIGHT UNIT (CEILING MOUNT)	BARRON LIGHTING	EXITRONIX LED-90	–	INCLUDED	LED	120/277	3		X									
DW	EMERGENCY LIGHT UNIT (WALL MOUNTED)	BARRON LIGHTING	EXITRONIX LED-90	–	INCLUDED	LED	120/277	3					X						
EW	EXIT SIGN (WALL MOUNTED)	BARRON LIGHTING	EXITRONIX GVEX-U-BP-WB-WH	–	INCLUDED	LED	120/277	4					X						
EC	EXIT SIGN/LIGHT COMBO (WALL MOUNTED)	BARRON LIGHTING	EXITRONIX GVLED-U-WH-EL90	–	INCLUDED	LED	120/277	7					X						

LUMINAIRE FIXTURE SCHEDULE GENERAL NOTES:
NOTE A: FL=FLUORESCENT, CFL=COMPACT FLUORESCENT, IND=INCANDESCENT, MH=METAL HALIDE, HPS=HIGH PRESSURE SODIUM, LED=LIGHT EMITTING DIODE, HAL=HALOGEN.
NOTE B: INSTALLATION OF LIGHT FIXTURES SHALL BE ACCORDING TO MANUFACTURER'S RECOMMENDATIONS AND APPLICABLE CODE REQUIREMENTS.
NOTE C: VERIFY THE EXACT MOUNTING HEIGHT AND FINISH OF ALL LIGHTING FIXTURES WITH ARCHITECT PRIOR TO PLACING ORDER OR COMMENCING WORK.

LIGHTING SWITCHBANK SCHEDULE

SWITCH	LOAD CONTROLLED	DESCRIPTION	TYPE
a	–	ORDER LTS	MANUAL SWITCH
b	–	PICK LTS	LOW-VOLTAGE DIMMER SWITCH
c	–	TRACK LIGHTING	LOW-VOLTAGE DIMMER SWITCH
d	–	DINING LIGHTS	LOW-VOLTAGE DIMMER SWITCH
E	–	DINING LIGHTS	LOW-VOLTAGE DIMMER SWITCH
F	–	DINING LIGHTS	LOW-VOLTAGE DIMMER SWITCH
G	–	DINING LIGHTS	LOW-VOLTAGE DIMMER SWITCH

GENERAL ELECTRICAL NOTES:
A. SEE PANEL SCHEDULES FOR INFORMATION ON CIRCUITS THAT ARE TO BE ROUTED THROUGH CONTACTORS OR RELAYS FOR CONTROL.
B. CIRCUITS SERVING EMERGENCY LIGHTING EQUIPMENT SUCH AS EMERGENCY BATTERIES SHALL NOT SHARE A NEUTRAL (SHALL NOT BE PART OF A MULTIWIRE BRANCH CIRCUIT) WITH ANY OTHER CIRCUIT. PROVIDE A SEPARATE NEUTRAL FOR EVERY CIRCUIT THAT SERVES EMERGENCY LIGHTING EQUIPMENT.
C. ALTHOUGH NOT SPECIFICALLY SHOWN, THE ELECTRICAL CONTRACTOR SHALL PROVIDE ALL REQUIRED WIRING AND DATA CABLING, INCLUDING ALL 0-10V CONTROL WIRING WHERE APPLICABLE, PER THE MANUFACTURER'S RECOMMENDATIONS FOR A COMPLETE, FUNCTIONAL DIMMING SYSTEM.

KEYED NOTES:
1. PROVIDE SWITCHBANK. REFER TO SWITCH SCHEDULE ON THIS SHEET. LABEL ALL AWITCHES WITH LOAD SERVED. COORDINATE SWITCH LABELING WITH ARCHITECT.
2. CONNECT TO EXHAUST FAN SERVING THIS ROOM. SEE SHEET E-201 FOR LOCATION OF EXHAUST FAN. SEE DETAIL 3/E-401 FOR CONTROL INFORMATION.
3. REFER TO SHEET E-201 FOR LIGHTING INFO FOR WALK-IN COOLER AND FREEZER.
4. CONNECT LIGHTING CIRCUIT VIA SWITCH(ES) LOCATED IN LIGHTING CONTROL SWITCHBANK. SEE SWITCH SCHEDULE FOR ADDITIONAL INFORMATION.

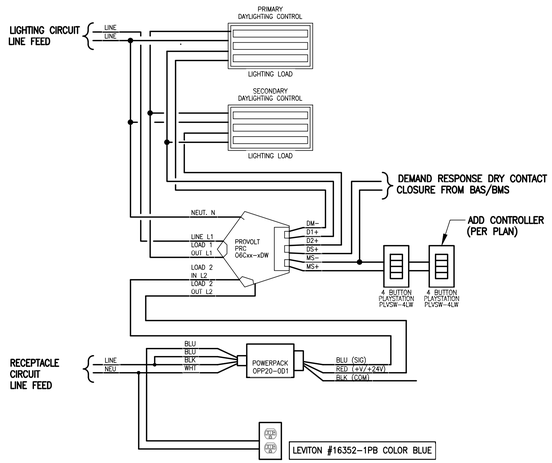

LIGHTING CONTROL DIAGRAM - OCC SENSOR / RECEPTACLE

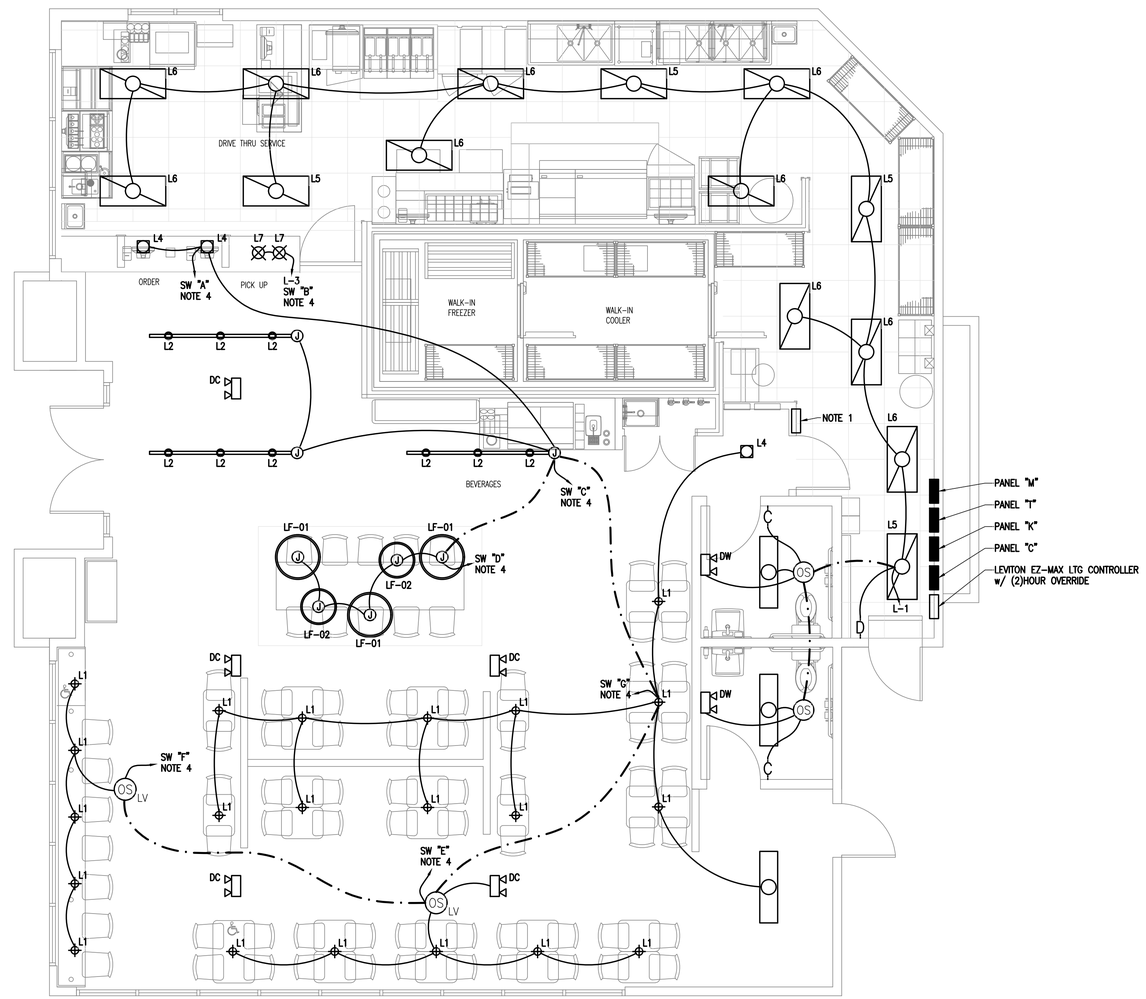

N

LIGHTING PLAN 1/4"

PAUL DHANENS • ARCHITECT

ARCHITECT

PAUL DHANENS
NO. C-23843
RENEW.
STATE OF CALIFORNIA
5100 CALIFORNIA AVE., SUITE 107
BAKERSFIELD, CALIFORNIA 93309
TELEPHONE: (661) 326-8336
FACSIMILE: (661) 326-8037

CONSULTANT

COPYRIGHT

PAUL DHANENS ARCHITECT expressly reserves its copyright and other property rights in these documents which are not to be reproduced, changed or copied in any written, graphic, electronic or any other manner to any third party except by the expressed written consent of PAUL DHANENS ARCHITECT.

NOTICE TO CONTRACTORS
Written dimensions on these drawings shall take precedence over scaled dimensions. Contractors shall verify and be responsible for confirming all dimensions and shall notify the architect immediately of any descrepancies or field variations discovered.

PROJECT

TENANT IMPROVEMENT FOR

FAMOUS FOR Steak 'n Shake STEAKBURGERS

1966 WEST AVE L
LANCASTER, CA

DATE	ISSUED FOR
9-24-18	BUILDING DEPT SUBMITTAL
6-26-19	

NO.	REVISIONS
△	
△	
△	
△	

ELECTRICAL

FILE NAME: 2366A2-0

SHEET

E-101

Kitchen Equipment List

Mark	Equipment Description
EA01	WALK-IN COOLER/FREEZER
EA01A	HEAT TAPE
EA03	COOLER EVAP COIL
EA05	FREEZER EVAP COIL
EA14	GRIDDLE EXHAUST HOOD
EA14A	FIRE SUPPRESSION SYSTEM
EA14B	ELECTRICAL CONTROL PACKAGE
EA17	FRY LINE HOOD
EB01	AIR CURTAIN
EB07	SODA SYSTEM
EB15	FREEZER
EB17	OFFICE
EB24	POS
EB24A	POS
EB25	PRINTER
EB32	DISH MACHINE
EB47	ICE MACHINE
EB50	OIL TANK
EB51	ELECTRIC KETTLE
EB65	CONVECTION OVEN
EB66	FREEZER
EB67	HEAT LAMP
EB76	MILK DISPENSER
EB85	SODA DISPENSER
EB87	COFFEE BREWER
EB88	TEA BREWER
EB97	DRESSING TABLE
EB98	POS SYSTEM
EB101	STAB BOXES
EB103	VERTICAL TOASTER
EB104	GRIDDLE
EB105	GRIDDLE
EB106	DRESS TABLE
EB107	CHEESE MELTER
EB112	HEAT LAMP
EB112A	HEAT LAMP
EB113	DRAWER WARMER
EB114	COUNTER TOP WARMER
EB115	MICROWAVE
EB116	HOLDING UNIT
EB119	HOT FOOD DISPENSER
EB123	SMALL DUMP STATION
EB124	FRYER BATTER CONTROLS
EB125	POP UP TOASTER
EB126	FREEZER
EB132	KDS SYSTEM
ES10	PREP TABLE
ESS1	MAIN SHAKE STATION
ESS1A	SHAKE STATION ACCESSORY
ESS1B	SHAKE SATION ACCESSORY
E2000	AIR CURTAIN

KEYED NOTES:

1. PROVIDE FINAL CONNECTION TO SIGNAGE. COORDINATE LOCATION AND ALL REQUIREMENTS WITH SIGN CONTRACTOR PRIOR TO ROUGH-IN. PROVIDE AN APPROPRIATE LOCAL DISCONNECTING MEANS MOUNTED IN AN ACCESSIBLE, INCONSPICUOUS LOCATION THAT IS WITHIN SIGHT OF THE SIGN. EACH SIGN CIRCUIT SHALL HAVE A SEPARATE NEUTRAL AND SEPARATE EQUIPMENT GROUNDING CONDUCTOR.
2. PROVIDE FINAL CONNECTION TO WALK-IN COOLER/FREEZER EVAPORATOR. VERIFY ALL REQUIREMENTS WITH WALK-IN COOLER/FREEZER MANUFACTURER PRIOR TO ROUGH-IN. INTERLOCK WITH ASSOCIATED REMOTE CONDENSING UNIT, DEFROST CONTROLS, DOOR HEATERS, CONDENSATE LINE HEAT TRACE, AND ALL OTHER APPURTENANCES PER THE MANUFACTURER'S REQUIREMENTS AND/OR RECOMMENDATIONS.
3. PROVIDE A 2'-0" x 8'-0" x 3/4" UL-LABELED FIRE-RETARDANT PLYWOOD BACKBOARD FOR TELECOMMUNICATIONS EQUIPMENT. PROVIDE GROUND BAR MOUNTED ON BACKBOARD WITH EQUIPMENT GROUNDING CONDUCTOR CONNECTED TO POWER SYSTEM'S GROUNDING ELECTRODE SYSTEM.
4. PROVIDE FINAL CONNECTION TO FREEZER HEAT TRACE TAPE. COORDINATE ALL REQUIREMENTS WITH MANUFACTURER PRIOR TO ROUGH-IN.
5. PROVIDE DEDICATED RECEPTACLE AT 88" AFF FOR OIL TANK. RECEPTACLE FOR OIL TANK SHALL NOT BE A GFI RECEPTACLE OR SHALL BE A GFI RECEPTACLE RATED FOR PUMP USAGE. PROVIDE JUNCTION BOX ON WALL 4" BELOW CEILING ABOVE FRYERS AND STUB 1" CONDUIT FROM BOX TO ABOVE CEILING FOR LOW VOLTAGE CABLING. COORDINATE INSTALLATION LOCATION AND REQUIREMENTS WITH MANUFACTURER PRIOR TO ROUGH-IN.
6. RUN FLEXIBLE CONDUIT CONCEALED WITH MILLWORK FOR CONNECTION TO DEVICES.
7. ALL PENETRATIONS THROUGH THE WALK-IN COOLER SHALL BE SEALED. ELECTRICAL CONTRACTOR SHALL AVOID SEAMS IN WALK-IN COOER PANELS WHEN MAKING PENETRATIONS ELECTRICAL CONTRACTOR SHALL MAKE ALL NECESSARY CONNECTIONS TO THE WALK-IN LIGHTS, DEFROST TIMERS, EVAPORATOR, ETC.
8. PROVIDE 20A/1P DISCONNECT SWITCH IN WEATHERPROOF, NEMA-3R ENCLOSURE FOR DRIVE-THRU MENU-BOARD. MOUNT DISCONNECT SWITCH TO BACK OF BOARD. COORDINATE EXACT LOCATION AND ALL REQUIREMENTS WITH ARCHITECTURAL PLANS.
9. PROVIDE (3) 1" UNDERGROUND CONDUITS, (1) FOR POWER, (1) FOR SPEAKER WIRES AND (1) FOR DETECTOR LOOP TO DRIVE-THRU MENU-BOARD AREA. EXTEND SPEAKER CONDUIT AND DETECTOR LOOP CONDUIT TO ABOVE CEILING. (NOTE: DETECTOR LOOP SHALL BE INSTALLED PRIOR TO THE PARKING LOT BEING INSTALLED. COORDINATE WITH OWNER AND GENERAL CONTRACTOR)
10. PROVIDE DEDICATED 15A/120V CIRCUIT FOR DRIVE THROUGH WINDOW. PROVIDE 30A/1P/NF NEMA-1 DISCONNECT SWITCH. COORDINATE EXACT LOCATION WITH PROJECT MANAGER AND ALL REQUIREMENTS WITH MANUFACTURER PRIOR TO ROUGH-IN.
11. PROVIDE 4" OCTAGONAL JUNCTION BOX WITH SCREW THREADS SET AT THE 2 AND 8 O'CLOCK POSITIONS FOR THE GREASE HOOD FIRE SUPPRESSION SYSTEM PULL STATION. PROVIDE A 1/2" CONDUIT FROM THE JUNCTION BOX TO 6" ABOVE THE ACCESSIBLE CEILING AND TERMINATE WITH A CONDUIT BUSHING. COORDINATE EXACT LOCATION WITH THE GREASE HOOD FIRE SUPPRESSION SYSTEM INSTALLER AND THE FIRE MARSHAL PRIOR TO ROUGH-IN.
12. INTERLOCK GAS SOLENOID VALVE WITH GREASE HOOD FIRE SUPPRESSION SYSTEM SUCH THAT GAS SOLENOID VALVE CLOSES UPON GREASE HOOD FIRE SUPPRESSION SYSTEM DISCHARGE. COORDINATE ALL REQUIREMENTS WITH PLUMBING CONTRACTOR.
13. THE ELECTRICAL CONTRACTOR IS RESPONSIBLE TO PROVIDE ALL WIRING AND COMPONENTS INDICATED AS FIELD WIRING OF HOOD CONTROL SYSTEM. VERIFY AND COORDINATE ALL REQUIREMENTS WITH THE HOOD CONTROL PANEL MANUFACTURER AND MECHANICAL CONTRACTOR PRIOR TO ROUGH-IN.

GENERAL ELECTRICAL NOTES:

A. WHERE THE MECHANICAL DESIGN UTILIZES A PLENUM RETURN AIR CEILING DESIGN, ALL EQUIPMENT AND MATERIALS INSTALLED WITHIN THE PLENUM RETURN CEILING MUST MEET THE FLAME SPREAD AND SMOKE DEVELOPED RATINGS OF 25/50 AND BE APPROVED FOR USE IN PLENUM RETURN CEILINGS. COORDINATE PLENUM CEILING LOCATIONS WITH THE MECHANICAL CONTRACTOR. LUMINAIRES THAT ARE MANUFACTURED WITH A METAL HOUSING MEET THIS REQUIREMENT AND ARE NOT REQUIRED TO BE 'PLENUM RATED UNLESS' INDICATED OTHERWISE.
B. COORDINATE ALL DEVICE LOCATIONS AND CIRCUIT ROUTING WITHIN ANY MILLWORK WITH MILLWORK VENDOR PRIOR TO ROUGH-IN.
C. COORDINATE THE CONNECTIONS OF ALL EQUIPMENT PROVIDED BY OTHERS WITH THE CONTRACTOR PROVIDING THE EQUIPMENT PRIOR TO ROUGH-IN. THIS INCLUDES, BUT IS NOT LIMITED TO, MECHANICAL EQUIPMENT, KITCHEN EQUIPMENT, AUDIO/VISUAL EQUIPMENT, FIRE SUPPRESSION SYSTEM EQUIPMENT, FIRE ALARM EQUIPMENT, ETC. THE ELECTRICAL CONTRACTOR IS RESPONSIBLE TO PROVIDE THE APPROPRIATE DISCONNECTING MEANS FOR, AND TO MAKE THE FINAL CONNECTION TO, ANY HARDWIRED EQUIPMENT. THE ELECTRICAL CONTRACTOR IS ALSO RESPONSIBLE TO PROVIDE AN APPROPRIATE CORD AND PLUG FOR ANY CORD-AND-PLUG CONNECTED EQUIPMENT THAT IS NOT EQUIPPED WITH AN INTEGRAL CORD AND PLUG.
D. SEE PANEL SCHEDULES FOR INFORMATION ON CIRCUITS THAT ARE TO BE ROUTED THROUGH CONTACTORS OR RELAYS FOR CONTROL.
E. ALL EQUIPMENT, DEVICES, AND LUMINAIRES SHALL BE SUITABLE FOR THE ENVIRONMENT IN WHICH THEY ARE INSTALLED. EQUIPMENT MOUNTED OUTDOORS SHALL BE NEMA 3R. DEVICES MOUNTED IN DAMP OR WET LOCATIONS SHALL BE WEATHERPROOF. RECEPTACLES RATED 15- OR 20-AMPS AND 120 VOLTS WHICH ARE LOCATED IN DAMP OR WET LOCATIONS SHALL BE GFCI PROTECTED AND EQUIPPED WITH A SUITABLE WEATHERPROOF COVERPLATE (WHILE-IN-USE IN WET LOCATIONS).
F. ALL LUGS, TERMINALS, ETC. IN ELECTRICAL DISTRIBUTION EQUIPMENT SHALL BE LISTED FOR A MINIMUM OF 75 DEGREE C CONDUCTORS. TERMINATIONS LISTED FOR ONLY 60 DEGREE C CONDUCTORS ARE NOT PERMITTED.

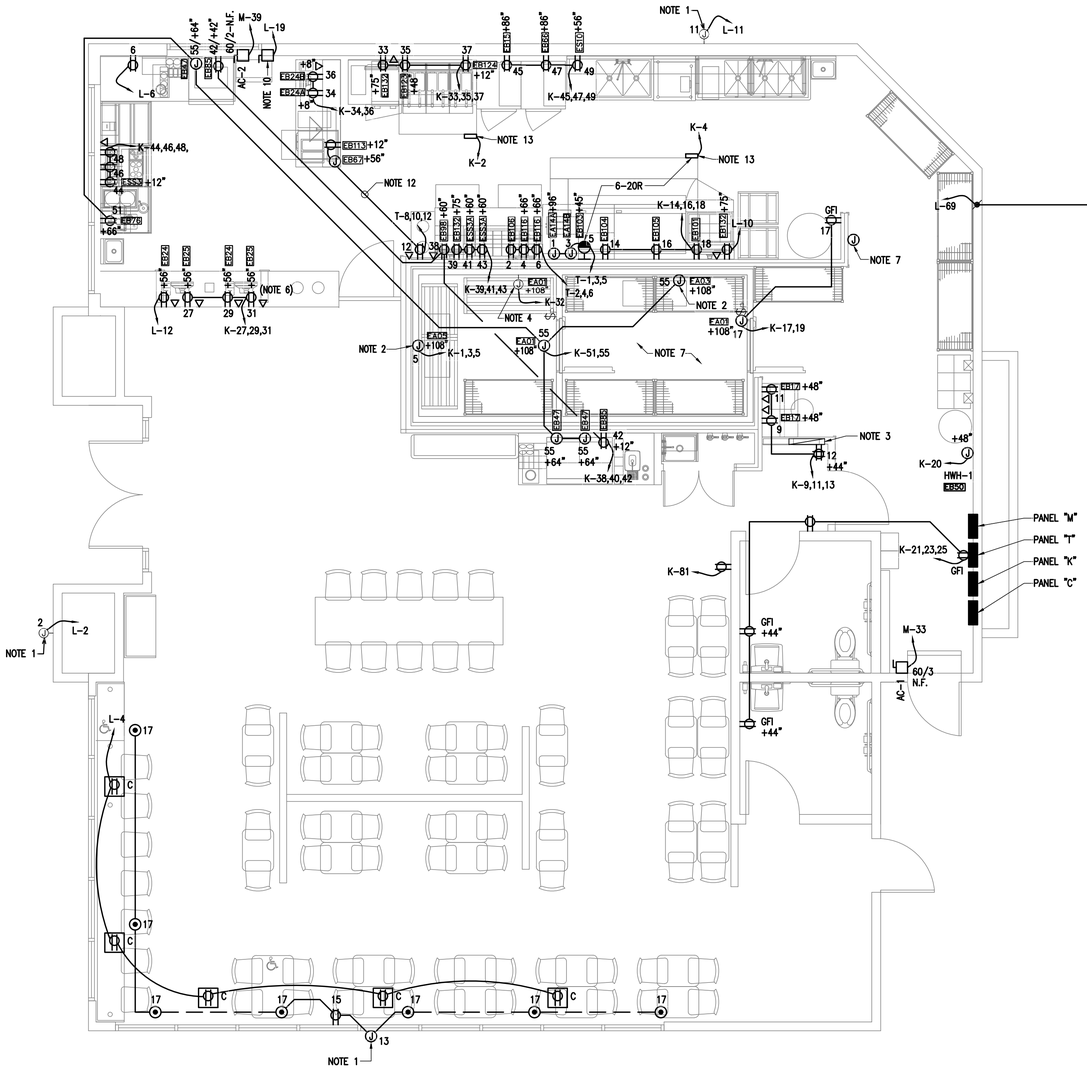

N

POWER & SIGNAL PLAN 1/4"

PAUL DHANENS • ARCHITECT

ARCHITECT

REGISTERED PROFESSIONAL ENGINEER PAUL DHANENS NO. C-23843 RENEWAL STATE OF CALIFORNIA

5100 CALIFORNIA AVE., SUITE 107
BAKERSFIELD, CALIFORNIA 93309
TELEPHONE: (661) 326-8336
FACSIMILE: (661) 326-8337

CONSULTANT

COPYRIGHT

PAUL DHANENS ARCHITECT expressly reserves its copyright and other property rights in these documents which are not to be reproduced, changed or copied in any written, graphic, electronic or other way designed to any third party without the expressed written consent of PAUL DHANENS ARCHITECT.

NOTICE TO CONTRACTORS:
Written dimensions on these drawings shall take precedence over scaled dimensions. Contractor shall verify and be responsible for confirming all dimensions and shall notify the architect immediately of any descripancies or field variations discovered.

PROJECT

TENANT IMPROVEMENT FOR

FAMOUS FOR Steak 'n Shake STEAKBURGERS

1966 WEST AVE L
LANCASTER, CA

DATE	ISSUED FOR
9-24-18	BUILDING DEPT SUBMITTAL
6-26-19	

NO.	REVISIONS

ELECTRICAL

FILE NAME: 2366A2-0

SHEET

E-201

GENERAL ELECTRICAL NOTES:

A. COORDINATE THE CONNECTIONS OF ALL EQUIPMENT PROVIDED BY OTHERS WITH THE CONTRACTOR PROVIDING THE EQUIPMENT PRIOR TO ROUGH-IN. THIS INCLUDES, BUT IS NOT LIMITED TO, MECHANICAL EQUIPMENT, KITCHEN EQUIPMENT, AUDIO/VISUAL EQUIPMENT, FIRE SUPPRESSION SYSTEM EQUIPMENT, FIRE ALARM EQUIPMENT, ETC. THE ELECTRICAL CONTRACTOR IS RESPONSIBLE TO PROVIDE THE APPROPRIATE DISCONNECTING MEANS FOR, AND TO MAKE THE FINAL CONNECTION TO, ANY HARDWIRED EQUIPMENT. THE ELECTRICAL CONTRACTOR IS ALSO RESPONSIBLE TO PROVIDE AN APPROPRIATE CORD AND PLUG FOR ANY CORD-AND-PLUG CONNECTED EQUIPMENT THAT IS NOT EQUIPPED WITH AN INTEGRAL CORD AND PLUG.

B. ALL EQUIPMENT, DEVICES, AND LUMINAIRES SHALL BE SUITABLE FOR THE ENVIRONMENT IN WHICH THEY ARE INSTALLED. EQUIPMENT MOUNTED OUTDOORS SHALL BE NEMA 3R. DEVICES MOUNTED IN DAMP OR WET LOCATIONS SHALL BE WEATHERPROOF. RECEPTACLES RATED 15- OR 20-AMPS AND 120 VOLTS WHICH ARE LOCATED IN DAMP OR WET LOCATIONS SHALL BE GFCI PROTECTED AND EQUIPPED WITH A SUITABLE WEATHERPROOF COVERPLATE (WHILE-IN-USE IN WET LOCATIONS).

C. ALL LUGS, TERMINALS, ETC. IN ELECTRICAL DISTRIBUTION EQUIPMENT SHALL BE LISTED FOR A MINIMUM OF 75 DEGREE C CONDUCTORS. TERMINATIONS LISTED FOR ONLY 60 DEGREE C CONDUCTORS ARE NOT PERMITTED.

KEYED NOTES:

1. DISCONNECT SWITCH IS PROVIDED BY EQUIPMENT MANUFACTURER INTEGRAL WITH EQUIPMENT. THE ELECTRICAL CONTRACTOR SHALL PROVIDE CIRCUIT AND FINAL CONNECTION TO DISCONNECT SWITCH AS INDICATED.
2. WEATHERPROOF GFCI SERVICE RECEPTACLE IS PROVIDED BY EQUIPMENT MANUFACTURER INTEGRAL WITH EQUIPMENT. THE ELECTRICAL CONTRACTOR SHALL PROVIDE CIRCUIT AND FINAL CONNECTION TO SERVICE RECEPTACLE AS INDICATED.
3. DUCT SMOKE DETECTOR AND RELAY FOR HVAC UNIT SUPPLY FAN SHUTDOWN SHALL BE FURNISHED BY THE ELECTRICAL CONTRACTOR FOR INSTALLATION BY THE MECHANICAL CONTRACTOR. THE ELECTRICAL CONTRACTOR SHALL ALSO PROVIDE A REMOTE KEYED TEST STATION WITH VISUAL STATUS ANNUNCIATOR WHEN DUCT SMOKE DETECTOR IS INSTALLED IN A CONCEALED LOCATION GREATER THAN 10'-0" ABOVE FINISHED FLOOR OR WHEN DUCT SMOKE DETECTOR'S STATUS INDICATORS ARE NOT READILY VISIBLE. COORDINATE LOCATION OF REMOTE KEYED TEST STATION WITH AUTHORITY HAVING JURISDICTION AND OWNER PRIOR TO ROUGH-IN. ALL FINAL WIRING SHALL BE BY THE ELECTRICAL CONTRACTOR.
4. CONNECT EXHAUST FAN TO LIGHTING CIRCUIT SERVING THE RESTROOM. SEE SHEET E-101 FOR CONTINUATION.
5. STARTER IS FURNISHED BY HOOD SUPPLIER IN HOOD MASTER CONTROL PANEL. MAKE FINAL CONNECTION THROUGH HOOD MASTER CONTROL PANEL.

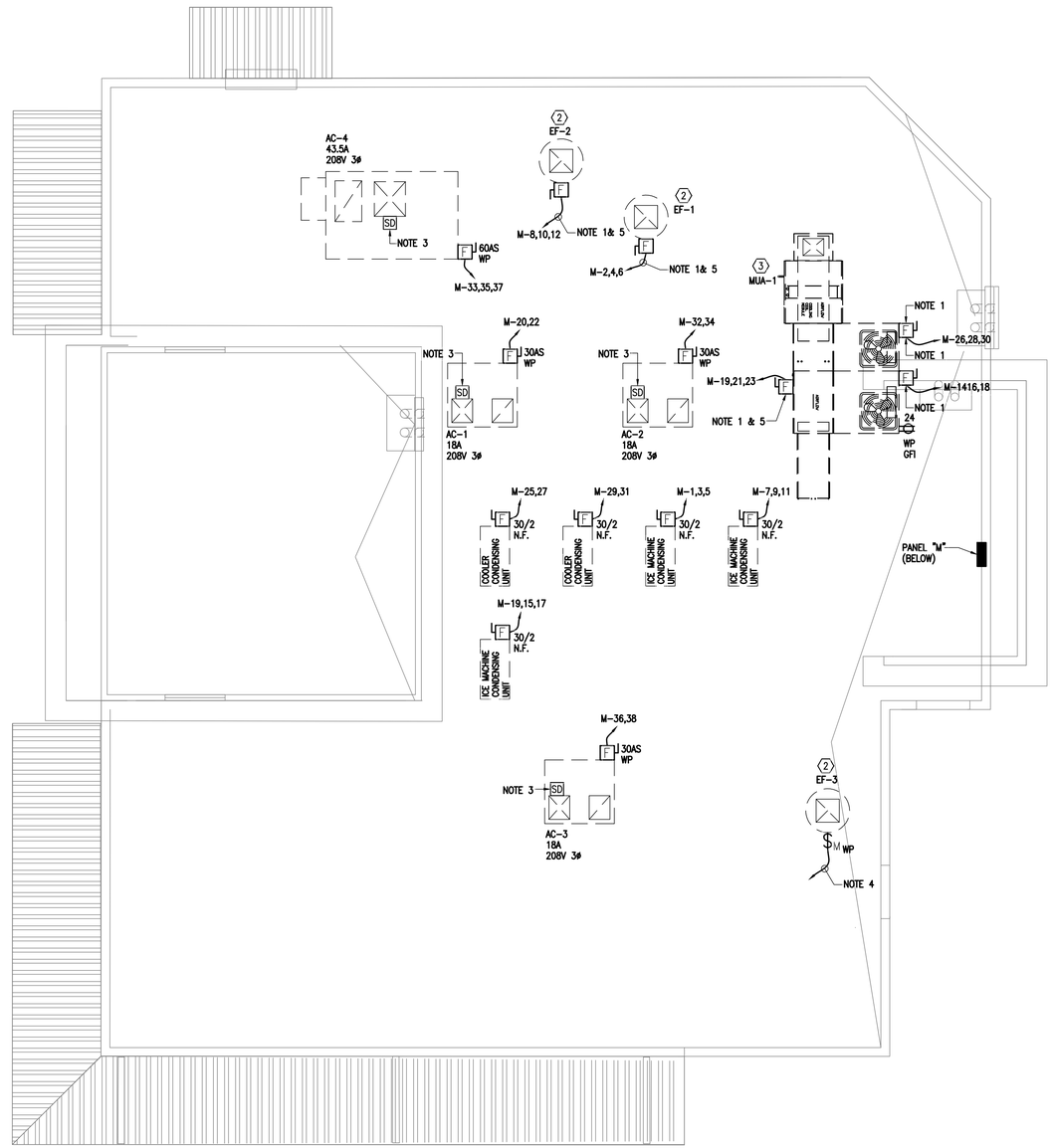

N

ELECTRICAL ROOF PLAN 1/4"

PAUL DHANENS • ARCHITECT

ARCHITECT

PAUL DHANENS
NO. C-23843
RENEWAL
STATE OF CALIFORNIA

5100 CALIFORNIA AVE., SUITE 107
BAKERSFIELD, CALIFORNIA 93309
TELEPHONE: (661) 326-8336
FACSIMILE: (661) 326-8337

CONSULTANT

COPYRIGHT

PAUL DHANENS ARCHITECT expressly reserves its copyright and other property rights in these documents which are not to be reproduced, changed or copied in any written, graphic or electronic form nor assigned to any third party without the expressed written consent of PAUL DHANENS ARCHITECT.

NOTICE TO CONTRACTORS
Written dimensions on these drawings shall take precedence over scaled dimensions. Contractors shall verify and be responsible for confirming all dimensions and shall notify the architect immediately of any descripancies or field variations discovered.

PROJECT

TENANT IMPROVEMENT FOR

FAMOUS FOR Steak 'n Shake STEAKBURGERS

1966 WEST AVE L
LANCASTER, CA

DATE	ISSUED FOR
9-24-18	BUILDING DEPT SUBMITTAL
6-26-19	

NO.	REVISIONS
△	
△	
△	
△	

ELECTRICAL

FILE NAME: 2366A2-0

SHEET

E-301

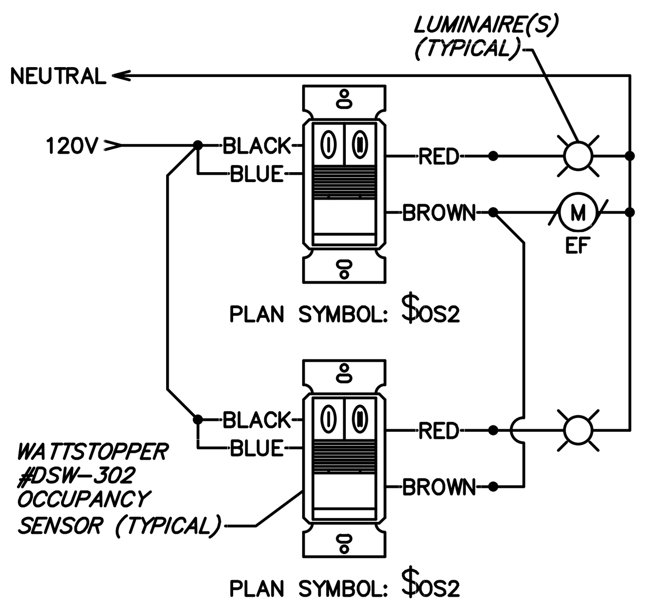

GENERAL NOTES APPLICABLE TO THIS DETAIL:

A. CONTRACTOR SHALL SET DIP SWITCHES TO ACCOMPLISH THE FOLLOWING SEQUENCE OF OPERATION:

1. RELAY 1 (RED WIRE) OF EACH OCCUPANCY SENSOR SHALL BE SET AS MANUAL ON TO TURN LIGHTS IN THE RESTROOM ON AND SHALL TURN LIGHTS OFF AFTER 15 MINUTES OF NOT SENSING MOTION.

A. ONLY THE LIGHTS WITHIN THE RESTROOM ASSOCIATED WITH THE OCCUPANCY SENSOR SHALL BE ENERGIZED BY THE OCCUPANCY SENSOR.

2. RELAY 2 (BROWN WIRE) OF EACH OCCUPANCY SENSOR SHALL BE SET AS AUTOMATIC ON TO TURN EXHAUST FAN ON UPON OCCUPANT ENTERING THE ROOM AND SHALL AUTOMATICALLY TURN EXHAUST FAN OFF AFTER 30 MINUTES OF NOT SENSING MOTION.

A. ACTIVATION OF EITHER OCCUPANCY SENSOR SHALL ENERGIZE THE EXHAUST FAN. EXHAUST FAN SHALL ONLY TURN OFF WHEN BOTH OCCUPANCY SENSORS TIMEOUT AFTER 30 MINUTES OF NOT SENSING MOTION.

B. EXHAUST FAN SHALL REMAIN RUNNING FOR 15 MINUTES AFTER THE OCCUPANCY SENSOR SWITCHES THE ROOM'S LIGHTING OFF.

3 RESTROOM LIGHTING AND EXHAUST FAN CONTROL DETAIL

NOT TO SCALE

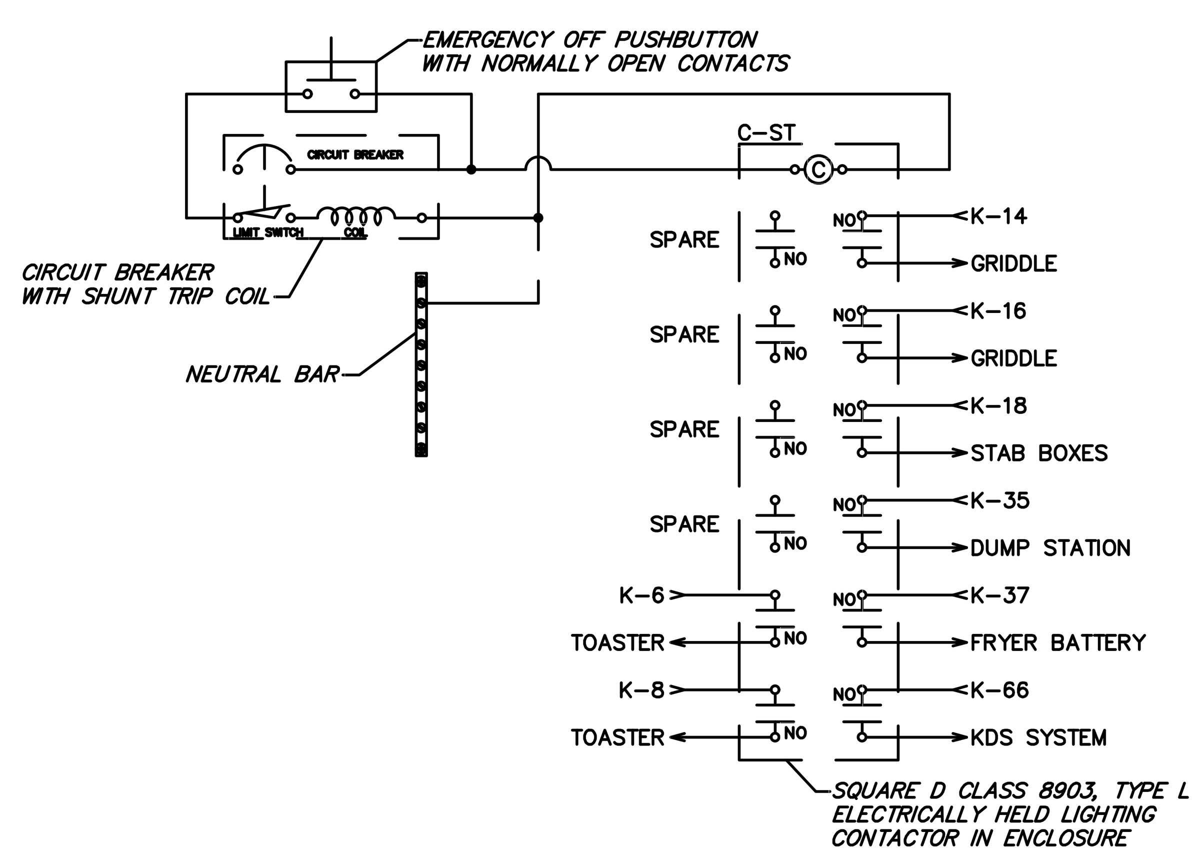

2 SHUNT TRIP CONTACTOR WIRING DIAGRAM

NOT TO SCALE

GENERAL FIRE ALARM NOTES

A. THE CONTRACTOR SHALL PROVIDE A FULLY ENGINEERED DESIGN OF THE FIRE DETECTION AND ALARM SYSTEM FROM A QUALIFIED FIRE DETECTION AND ALARM SYSTEM DESIGNER. ANY FIRE DETECTION AND ALARM INFORMATION INDICATED ON THE DRAWINGS IS STRICTLY FOR THE PURPOSE OF ESTABLISHING A MINIMUM CRITERIA TO AID THE FIRE DETECTION AND ALARM SYSTEM DESIGNER IN THE DESIGN OF THE FULLY ENGINEERED FIRE DETECTION AND ALARM DRAWINGS. DESIGNER SHALL BE NICET LEVEL III OR IV (3 OR 4) CERTIFIED FIRE ALARM TECHNICIAN OR REGISTERED FIRE PROTECTION ENGINEER, EMPLOYED BY FIRE ALARM CONTROL UNIT MANUFACTURER, CONTRACTOR, OR INSTALLER, WITH EXPERIENCE DESIGNING FIRE ALARM SYSTEMS IN THE JURISDICTIONAL AREA OF THE AUTHORITIES HAVING JURISDICTION.

B. THE DESIGNER SHALL PRODUCE ALL REQUIRED DRAWINGS, CALCULATIONS, AND EQUIPMENT SPECIFICATIONS REQUIRED FOR JURISDICTIONAL APPROVAL AND SUBMIT ALL REQUIRED DOCUMENTS TO THE AUTHORITY HAVING JURISDICTION FOR APPROVAL.

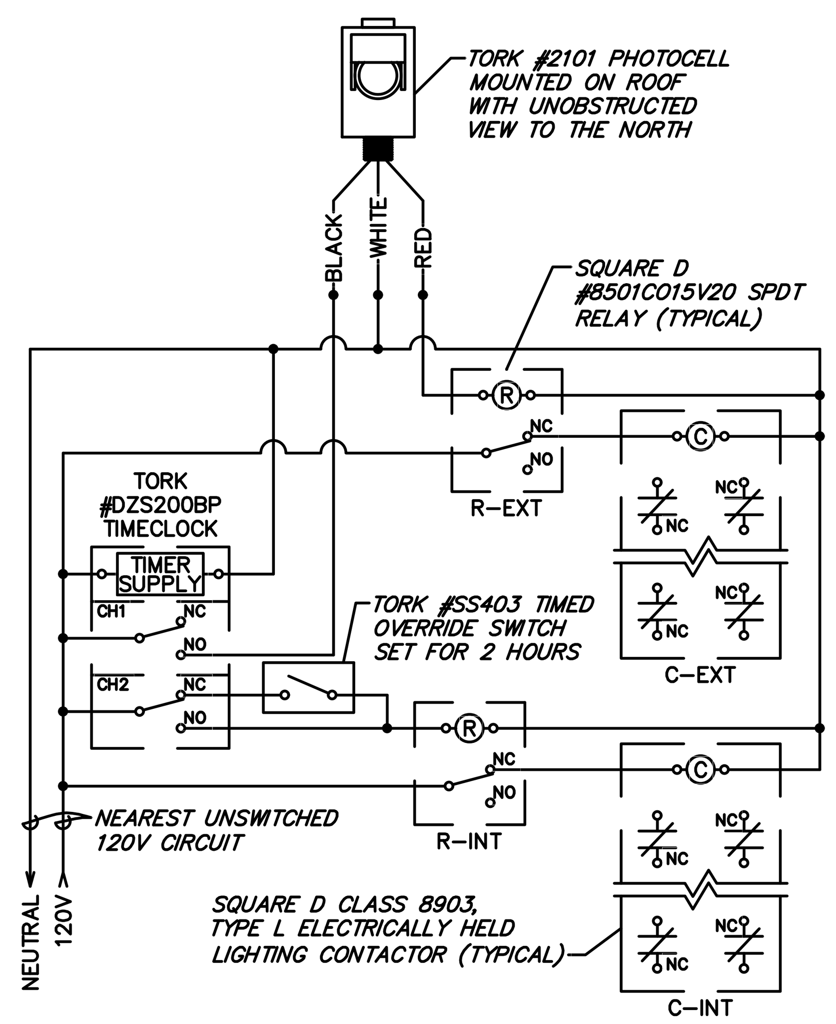

GENERAL NOTES APPLICABLE TO THIS DETAIL:

A. SEE PANEL SCHEDULES FOR CIRCUITS THAT ARE TO BE CONTROLLED BY EACH CONTACTOR.

B. EACH CONTACTOR CONSTITUTES A CONTROL ZONE. ALTHOUGH NOT SPECIFICALLY SHOWN ON THIS DETAIL, PROVIDE MULTIPLE CONTACTORS WIRED IN PARALLEL WHEN THE NUMBER OF CIRCUITS IN A CONTROL ZONE EXCEEDS THE MAXIMUM NUMBER OF POLES AVAILABLE ON A SINGLE CONTACTOR. PROVIDE A MINIMUM OF 2 SPARE CONTACTOR POLES PER CONTROL ZONE.

C. ALL CONTACTORS SHALL BE PROVIDED WITH NORMALLY CLOSED CONTACTS. THE CONTACTORS SHALL BE DELIVERED FROM THE FACTORY WITH NORMALLY CLOSED CONTACTS OR WITH FIELD-CONVERTIBLE CONTACTS. THE CONTRACTOR SHALL FIELD-CONVERT CONTACTORS TO NORMALLY CLOSED WHEN FIELD-CONVERTIBLE NORMALLY OPEN CONTACTS ARE PROVIDED.

D. ANY LOCAL SWITCHING INDICATED ON THE PLANS SHALL BE ON THE LOAD SIDE OF THE CONTACTOR.

E. THE ELECTRICAL CONTRACTOR SHALL PROGRAM ALL TIMECLOCKS AND INDIVIDUAL DIGITAL TIMECLOCK CHANNELS. COORDINATE ALL ON, OFF, AND HOLIDAY SETTINGS WITH THE OWNER. INTERIOR CONTROL ZONES SHALL HAVE THE ASTRONOMIC FUNCTION FOR THE CHANNEL TURNED OFF. EXTERIOR CONTROL ZONES SHALL HAVE THE ASTRONOMIC FUNCTION FOR THE CHANNEL TURNED ON.

F. MOUNT TIMECLOCK, RELAYS, AND CONTACTORS ADJACENT TO THE ASSOCIATED PANELBOARD(S). ALL CONTACTORS AND RELAYS SHALL BE PROVIDED WITH INDIVIDUAL ENCLOSURES. AT THE CONTRACTOR'S OPTION, OPEN RELAYS AND CONTACTORS ARE PERMITTED WHEN MOUNTED WITHIN A COMMON ENCLOSURE.

G. COORDINATE MOUNTING LOCATION OF OVERRIDE SWITCH WITH THE OWNER.

H. PROVIDE TO THE OWNER A VOLUNTARY BID ALTERNATE TO UTILIZE A RELAY PANEL WITH A DIGITAL TIMECLOCK, LOW VOLTAGE EXTERIOR PHOTOSENSOR, AND LOW VOLTAGE OVERRIDE SWITCH IN LIEU OF THE COMPONENTS SHOWN WITHIN THIS DETAIL.

1 LIGHTING CONTROL DETAIL

NOT TO SCALE

ELECTRICAL SYMBOL LEGEND (SOME MAY NOT BE USED)

SYMBOL	DESCRIPTION
	WALL MOUNTED SINGLE RECEPTACLE, NEMA 5-20R
	WALL MOUNTED DUPLEX RECEPTACLE
	WALL MOUNTED DEDICATED DUPLEX RECEPTACLE
	WALL MOUNTED DUPLEX RECEPTACLE, ONE RECEPTACLE SWITCHED OR SPLIT-WIRED
	WALL MOUNTED QUADRUPLEX RECEPTACLE
	WALL MOUNTED DEDICATED QUADRUPLEX RECEPTACLE
	WALL MOUNTED QUADRUPLEX RECEPTACLE, SPLIT-WIRED
	WALL MOUNTED SPECIAL RECEPTACLE, NEMA CONFIGURATION AS NOTED
	WALL MOUNTED RANGE RECEPTACLE, NEMA 14-50R UNLESS INDICATED OTHERWISE
	FLUSH FLOOR MOUNTED SINGLE RECEPTACLE, NEMA 5-20R
	FLUSH FLOOR MOUNTED DUPLEX RECEPTACLE
	FLUSH FLOOR MOUNTED DEDICATED DUPLEX RECEPTACLE
	FLUSH FLOOR MOUNTED DUPLEX RECEPTACLE, SPLIT-WIRED
	FLUSH FLOOR MOUNTED QUADRUPLEX RECEPTACLE
	FLUSH FLOOR MOUNTED DEDICATED QUADRUPLEX RECEPTACLE
	FLUSH FLOOR MOUNTED QUADRUPLEX RECEPTACLE, SPLIT-WIRED
	FLUSH FLOOR MOUNTED SPECIAL RECEPTACLE, NEMA CONFIGURATION AS NOTED
	ABOVE FLOOR SERVICE FITTING, HUBBELL #SC3098A OR EQUAL; NEMA CONFIGURATION AS NOTED
C	CEILING MOUNTED SINGLE RECEPTACLE, NEMA 5-20R
C	CEILING MOUNTED DUPLEX RECEPTACLE
C	CEILING MOUNTED DEDICATED DUPLEX RECEPTACLE
C	CEILING MOUNTED DUPLEX RECEPTACLE, SPLIT-WIRED
C	CEILING MOUNTED QUADRUPLEX RECEPTACLE
C	CEILING MOUNTED DEDICATED QUADRUPLEX RECEPTACLE
C	CEILING MOUNTED QUADRUPLEX RECEPTACLE, SPLIT-WIRED
C	CEILING MOUNTED SPECIAL RECEPTACLE, NEMA CONFIGURATION AS NOTED
	BRANCH CIRCUITING, CONCEALED IN WALL OR CEILING
	BRANCH CIRCUITING, CONCEALED IN OR UNDER FLOOR
	BRANCH CIRCUITING, EXPOSED
	HOMERUN TO PANEL. THE NUMBER OF ARROWS INDICATES THE NUMBER OF CIRCUITS. TWO WIRES UNLESS NOTED OTHERWISE; SLASHES INDICATE NUMBER OF WIRES. GROUND WIRE IS REQUIRED BUT NOT INDICATED. A 7 INDICATES ISOLATED GROUND CONDUCTOR.
	CONDUIT STUB
	VERTICAL CONDUIT/CIRCUIT
B	BELL
B	BUZZER
B	CHIME
S	SPEAKER, CEILING
S	SPEAKER, WALL
S G	SPEAKER, GROUND-MOUNTED
VC	VOLUME CONTROL
AMP	SOUND SYSTEM AMPLIFIER
TR	LOW VOLTAGE CONTROL TRANSFORMER
TC	AUTOMATIC TIMECLOCK
FACP	FIRE ALARM CONTROL PANEL
EVAC	FIRE ALARM VOICE EVACUATION PANEL
FAA	FIRE ALARM REMOTE ANNUNCIATOR
ZAM	FIRE ALARM ZONE ADDRESSABLE MODULE
F	FIRE ALARM MANUAL PULLSTATION
	AUTOMATIC SMOKE DETECTOR, WALL MOUNTED
	AUTOMATIC SMOKE DETECTOR, CEILING MOUNTED
D	AUTOMATIC SMOKE DETECTOR, DUCT MOUNTED, AND FIRE ALARM RELAY (INTEGRAL OR FIELD-INSTALLED)
RTS	DUCT SMOKE DETECTOR REMOTE TEST SWITCH
	AUTOMATIC HEAT DETECTOR, WALL MOUNTED
	AUTOMATIC HEAT DETECTOR, CEILING MOUNTED
F	FIRE SPRINKLER FLOW SWITCH
F	FIRE SPRINKLER TAMPER SWITCH AND CORROSION MONITORING SYSTEM SUPERVISORY CONNECTION
F	FIRE SPRINKLER ALARM BELL
	FIRE ALARM MAGNETIC DOOR HOLDER

SYMBOL	DESCRIPTION
	PANELBOARD, UTILITY POWER
	POWER DISTRIBUTION PANEL OR SWITCHBOARD, UTILITY POWER
	METER AND SOCKET
J	WALL MOUNTED JUNCTION/OUTLET BOX
J	FLUSH FLOOR MOUNTED JUNCTION/OUTLET BOX
J C	CEILING MOUNTED JUNCTION/OUTLET BOX
J	JUNCTION BOX MOUNTED ABOVE CEILING
	MULTI-OUTLET ASSEMBLY
	CORD AND PLUG
M	MOTOR
XX/X XXA FUSES	SAFETY SWITCH, SIZE AS INDICATED ON PLAN
XX/X XXA FUSES	COMBINATION MAGNETIC MOTOR STARTER AND DISCONNECT SWITCH, SIZE AS INDICATED ON PLAN
$MOD	SWITCH. SPST UNLESS INDICATED WITH MODIFIER. HORSEPOWER RATED WHEN USED FOR MOTOR CONTROL OR DISCONNECTING MEANS. SWITCH MODIFIERS, INCLUDING COMBINATIONS THEREOF: 2: DPST. 3: 3-WAY (SPDT). 4: 4-WAY. D: DIMMER. F: BOX COVER UNIT, BUSSMANN SSU OR STY SERIES. G: GLOW HANDLE (HANDLE GLOWS WHEN SWITCH IS OFF). H: HORIZONTALLY MOUNTED. K: KEY OPERATED. M: MANUAL MOTOR CONTROLLER WITH OVERLOAD HEATER. SB: SWITCH BANK (GANGED SWITCHES) OS1: OCCUPANCY SENSOR. OS2: DUAL-RELAY OCCUPANCY SENSOR. P: PILOT LIGHT (PILOT ON WHEN SWITCH IS ON). T: TIMER. LV: LOW VOLTAGE. OR: OVERRIDE. OT: OVERRIDE WITH TIMER. WP: WEATHERPROOF DTC: SPDT, CENTER OFF, MAINTAINED CONTACT. DTM: SPDT, CENTER OFF, MOMENTARY CONTACT. LOWERCASE LETTER: CONTROL LUMINAIRE WITH SAME LETTER.
PS	CEILING MOUNTED PHOTOSENSOR
OS	CEILING MOUNTED OCCUPANCY SENSOR
OS	WALL MOUNTED OCCUPANCY SENSOR
XX	TRACK LIGHTING LIVE END FEED; "XX" INDICATES CURRENT LIMITER RATING IF APPLICABLE
XXX RPS	LOW VOLTAGE LIGHTING POWER SUPPLY/TRANSFORMER; "XXX" INDICATES VOLT-AMP RATING
	TELEPHONE OUTLET, FLOOR; *P DENOTES NUMBER OF TELEPHONE PORTS
C	TELEPHONE OUTLET, CEILING; *P DENOTES NUMBER OF TELEPHONE PORTS
	TELEPHONE OUTLET, WALL; *P DENOTES NUMBER OF TELEPHONE PORTS
	DATA OUTLET, FLOOR; *D DENOTES NUMBER OF DATA PORTS
C	DATA OUTLET, CEILING; *D DENOTES NUMBER OF DATA PORTS
	DATA OUTLET, WALL; *D DENOTES NUMBER OF DATA PORTS
	COMBINATION TELEPHONE AND DATA OUTLET, FLOOR; *P/*D DENOTES NUMBER OF TELEPHONE/DATA PORTS
C	COMBINATION TELEPHONE AND DATA OUTLET, CEILING; *P/*D DENOTES NUMBER OF TELEPHONE/DATA PORTS
	COMBINATION TELEPHONE AND DATA OUTLET, WALL; *P/*D DENOTES NUMBER OF TELEPHONE/DATA PORTS
	3/4" THICK PLYWOOD BACKBOARD, SIZE AS INDICATED ON DRAWINGS
TV	TELEVISION OUTLET, FLOOR
TV C	TELEVISION OUTLET, CEILING
TV	TELEVISION OUTLET, WALL
	PUSHBUTTON STATION, ONE BUTTON
	PUSHBUTTON STATION, TWO BUTTON
	PUSHBUTTON STATION, THREE BUTTON
R	RELAY
PC	PHOTOCELL
F	FIRE ALARM HORN, WALL MOUNTED
F	FIRE ALARM SPEAKER, WALL MOUNTED
	FIRE ALARM STROBE, WALL MOUNTED
	FIRE ALARM COMBINATION HORN AND STROBE, WALL MOUNTED
	FIRE ALARM COMBINATION SPEAKER AND STROBE, WALL MOUNTED
F C	FIRE ALARM HORN, CEILING MOUNTED
F C	FIRE ALARM SPEAKER, CEILING MOUNTED
C	FIRE ALARM STROBE, CEILING MOUNTED
C	FIRE ALARM COMBINATION HORN AND STROBE, CEILING MOUNTED
C	FIRE ALARM COMBINATION SPEAKER AND STROBE, CEILING MOUNTED
PIV	FIRE SPRINKLER ELECTRONICALLY SUPERVISED POST INDICATOR VALVE

ABBREVIATIONS AND MODIFIERS (SOME MAY NOT BE USED)

AFF	ABOVE FINISHED FLOOR	SPST	SINGLE POLE, SINGLE THROW	+XX"	MOUNTING HEIGHT MODIFIER
AFG	ABOVE FINISHED GRADE	DPST	DOUBLE POLE, SINGLE THROW	WP	WEATHERPROOF MODIFIER
NIC	NOT IN CONTRACT	3PST	THREE POLE, SINGLE THROW	PT	POKE-THROUGH MODIFIER
UNO	UNLESS NOTED OTHERWISE	4PST	FOUR POLE, SINGLE THROW	H	HORIZONTAL MOUNT MODIFIER
N.F.	NON-FUSED	SPDT	SINGLE POLE, DOUBLE THROW	HG	HOSPITAL GRADE MODIFIER
GFPE	GROUND-FAULT PROTECTION OF EQUIPMENT	DPDT	DOUBLE POLE, DOUBLE THROW	IG	ISOLATED GROUND MODIFIER
ST	SHUNT TRIP MODIFIER	3PDT	THREE POLE, DOUBLE THROW	SP	SURGE PROTECTION MODIFIER
GND	GROUND	4PDT	FOUR POLE, DOUBLE THROW	GFCI	GROUND-FAULT CIRCUIT INTERRUPTER MODIFIER
EGC	EQUIPMENT GROUNDING CONDUCTOR	EM	EMERGENCY LIGHT MODIFIER		
GEC	GROUNDING ELECTRODE CONDUCTOR	NL	NIGHTLIGHT LUMINAIRE MODIFIER	SR	SHOW WINDOW RECEPTACLE MOUNTED WITHIN 18 INCHES OF TOP OF SHOW WINDOW
AHJ	AUTHORITY HAVING JURISDICTION			CR	CONTROLLED RECEPTACLE MODIFIER
NEC	NATIONAL ELECTRICAL CODE (NFPA 70)			CH	CLOCK HANGER RECEPTACLE

PAUL DHANENS • ARCHITECT

ARCHITECT

LICENSED ARCHITECT
PAUL DHANENS
NO. C-23843
RENEWAL
STATE OF CALIFORNIA

5100 CALIFORNIA AVE, SUITE 107
BAKERSFIELD, CALIFORNIA 93309
TELEPHONE: (661) 326-8936
FACSIMILE: (661) 326-8937

CONSULTANT

COPYRIGHT

PAUL DHANENS ARCHITECT expressly reserves its copyright and other property rights in these documents which are not to be reproduced, changed or copied in any written, graphic or electronic form, nor assigned to any third party without the expressed written consent of PAUL DHANENS ARCHITECT.

NOTICE TO CONTRACTORS
Written dimensions on these drawings shall take precedence over scaled dimensions. Contractor shall verify and be responsible for confirming all dimensions and shall notify the architect immediately of any descripencies or field variations discovered.

PROJECT

TENANT IMPROVEMENT FOR

Steak 'n Shake

1966 WEST AVE L
LANCASTER, CA

DATE	ISSUED FOR
9-24-18	BUILDING DEPT SUBMITTAL
6-26-19	

NO.	REVISIONS
1	
2	
3	
4	

ELECTRICAL

FILE NAME: 2366A2-0

SHEET

E-401

PANEL "M" SCHEDULE

FED FROM: FUSIBLE SWITCH
VOLTAGE: 120/208V, 3 PHASE, 4 WIRE
BUS MATERIAL: ALUMINUM OR COPPER
BUS LOAD: 104 AMPS
BUS RATING: 225 AMPS
MAIN: MAIN LUG ONLY

MOUNTING: SURFACE MOUNTED
ENCLOSURE: NEMA 1
FAULT CURRENT: 35331 AMPS
AIC RATING: 42 kAIC
OPTIONS*: BONDED EQUIPMENT GROUND BAR

NOTES	CKT.	LOAD DESCRIPTION	LOAD (VA) A	LOAD (VA) B	LOAD (VA) C	BREAKER	BREAKER	LOAD (VA) A	LOAD (VA) B	LOAD (VA) C	LOAD DESCRIPTION	CKT.	NOTES
	1	ICE CONDENSING UNIT	1116			20/3	15/3	312			EF-1	2	
	3	-----		1116		---	---		312		-----	4	
	5	-----			1116	---	---			312	-----	6	
	7	ICE CONDENSING UNIT	1116			20/3	15/3	264			EF-2	8	
	9			1116		---	---		264		-----	10	
	11				1116	---	---			264	-----	12	
	13	ICE CONDENSING UNIT	1116			20/3	20/3	1088			MUA-1 CONDENSER 1	14	
	15	-----		1116		---	---		1088		-----	16	
	17	-----			1116	---	---			1088	-----	18	
	19	MUA-1	708			15/3	30/2	1875			AC-1	20	
	21	-----		708		---	---		1875		18A	22	
	23	-----			708	---	20/1			540	RECEPT	24	
	25	COOLER CONDEN	624			15/2	20/3	1088			MUA-1 CONDENSER 2	26	
	27	-----		624		---	---		1088		-----	28	
	29	FREEZER CONDEN			1882	25/2	---			1088	-----	30	
	31	-----	1882			---	30/2	1875			AC-2	32	
	33	AC-4		5220		60/3	---		1875		18A	34	
	35	43.5A			5220	---	30/2			1875	AC-3	36	
	37	-----	5220			---	---	1875			18A	38	
	39	SPACE ONLY									SPACE ONLY	40	
	41	SPACE ONLY									SPACE ONLY	42	
		TOTALS:	11782	9900	11158			8377	6502	5167			

NOTES:
* PROVIDE HANDLE TIES FOR ALL MULTIWIRE BRANCH CIRCUITS. SEE SPECIFICATIONS FOR OTHER OPTIONS REQUIRED.

PHASE A VOLT-AMPS : 20159 VA.
PHASE B VOLT-AMPS : 16402 VA.
PHASE C VOLT-AMPS : 16325 VA.

TOTAL DEMAND AMPS = 52886 VOLTS-AMPS ÷ (√3 • PHASE VOLTAGE 208 VOLTS) = 147 AMPS

PANEL "T" SCHEDULE

FED FROM: POWER PANEL "MDP"
VOLTAGE: 120/208V, 3 PHASE, 4 WIRE
BUS MATERIAL: ALUMINUM OR COPPER
BUS LOAD: 25 AMPS
BUS RATING: 100 AMPS
MAIN: MAIN LUG ONLY

MOUNTING: SEMI-FLUSH MOUNTED
ENCLOSURE: NEMA 1
FAULT CURRENT: 13900 AMPS
AIC RATING: 22 kAIC
OPTIONS*: BONDED EQUIPMENT GROUND BAR

NOTES	CKT.	LOAD DESCRIPTION	LOAD (VA) A	LOAD (VA) B	LOAD (VA) C	BREAKER	BREAKER	LOAD (VA) A	LOAD (VA) B	LOAD (VA) C	LOAD DESCRIPTION	CKT.	NOTES
HPL	1	FIRE SUPPRESSION SYSTEM	500			20/1	20/1	900			DRESS TABLE	2	GFCI
HPL	3	ELECTRICAL CONTROL PACK		500		20/1	20/1		1200		HOLDING UNIT	4	GFCI
C-ST	5	VERITCAL TOASTER			1643	20/2	20/1			1200	HOLDING UNIT	6	GFCI
C-ST	7	-----	1643			---	20/1	900			DRAWER WARMER	8	GFCI
	9	SPARE				20/1	15/1		648		HEAT LAMP	10	HPL
	11	SPARE				20/1	20/1			900	POS SYSTEM	12	GFCI
	13	SPARE				20/1					SPACE ONLY	14	
	15	SPARE				20/1					SPACE ONLY	16	
	17	SPARE				20/1					SPACE ONLY	18	
	19	SPARE				20/1					SPACE ONLY	20	
	21	SPARE				20/1					SPACE ONLY	22	
	23	SPARE				20/1					SPACE ONLY	24	
	25	SPARE				20/1					SPACE ONLY	26	
	27	SPARE				20/1					SPACE ONLY	28	
	29	SPARE				20/1					SPACE ONLY	30	
		TOTALS:	2143	500	1643			1800	1848	2100			

NOTES:
* PROVIDE HANDLE TIES FOR ALL MULTIWIRE BRANCH CIRCUITS. SEE SPECIFICATIONS FOR OTHER OPTIONS REQUIRED.
GFCI CIRCUIT BREAKER SHALL BE GROUND-FAULT CIRCUIT INTERRUPTING (GFCI) TYPE
HPL CIRCUIT BREAKER SHALL HAVE HANDLE PADLOCK ATTACHMENT TO LOCK BREAKER IN OPEN POSITION
C-# CIRCUIT SHALL BE ROUTED THROUGH CONTACTOR, # = CONTACTOR NUMBER

PHASE A VOLT-AMPS : 3943 VA.
PHASE B VOLT-AMPS : 2348 VA.
PHASE C VOLT-AMPS : 3743 VA.

TOTAL DEMAND AMPS = 10034 VOLTS-AMPS ÷ (√3 • PHASE VOLTAGE 208 VOLTS) = 28 AMPS

PANEL "K" SCHEDULE

FED FROM: PANEL UTILITY TRANSFORMER
VOLTAGE: 120/208V, 3 PHASE, 4 WIRE
BUS MATERIAL: ALUMINUM OR COPPER
BUS LOAD: 104 AMPS
BUS RATING: 225 AMPS
MAIN: MAIN LUG ONLY

MOUNTING: SURFACE MOUNTED
ENCLOSURE: NEMA 1
FAULT CURRENT: 15093 AMPS
AIC RATING: 22 kAIC
OPTIONS*: BONDED AND ISOLATED GROUND BARS

NOTES	CKT.	LOAD DESCRIPTION	LOAD (VA) A	LOAD (VA) B	LOAD (VA) C	BREAKER	BREAKER	LOAD (VA) A	LOAD (VA) B	LOAD (VA) C	LOAD DESCRIPTION	CKT.	NOTES
GFCI	1	KDS SYSTEM	900			20/1	20/1	500			HOOD CONTROL	2	
GFCI	3	POS SYSTEM		900		20/1	20/1		500		HOOD CONTROL	4	
HPL	5	FREEZER EVAP COIL			1352	20/2	20/1			500	LCP	6	
	7	-----	1352			---	20/1	500			SHUNT TRIP CONTACTOR	8	
GFCI	9	OFFICE RECEP		1800		20/1					SHUNT TRIP COIL	10	ST
GFCI	11	OFFICE RECEP			1800	20/1	20/1				SPARE	12	
GFCI	13	TELEPHONE BOARD	360			20/1	20/1	180			GRIDDLE	14	GFCI/ C-ST
	15	SPARE				15/1	20/1		180		GRIDDLE	16	GFCI/ C-ST
HPL	17	WALK-IN COOLER/FREEZER			600	15/1	20/1			900	STAB BOXES	18	GFCI/ C-ST
	19	RECEPT.	180			20/1	20/1	500			HWH-1	20	
GFCI	21	SODA SYSTEM		1000		20/1	20/1		500		P-1	22	C-INT
	23	OIL TANK			1000	20/1	20/1				SPARE	24	
	25	RECEPT.	540			20/1	20/1	720			UC REFRIGERATOR	26	GFCI
GFCI	27	PRINTER		360		20/1	15/1				SPARE	28	
GFCI	29	POS			900	20/1	20/1				SPARE	30	
GFCI	31	PRINTER	360			20/1	20/1	1800			HEAT TRACE	32	GFPE
GFCI	33	KDS SYSTEM		900		20/1	20/1		360		PRINTER	34	GFCI
GFCI	35	SMALL DUMP STATION			1080	20/1	20/1			900	POS	36	GFCI
GFO/ C-ST	37	FRYER BATTER CONTROLS	612			20/1	20/1	900			POS SYSTEM	38	GFCI
GFCI	39	KDS SYSTEM		900		20/1	20/1		180		SHAKE SATION ACCESSORY	40	GFCI
GFCI	41	SHAKE STATION ACCESSORY			600	20/1	20/1			420	SODA DISPENSER	42	GFCI
GFCI	43	SHAKE STATION ACCESSORY	600			20/1	30/1	2400			MAIN SHAKE STATION	44	GFCI
GFCI	45	FREEZER		1140		20/1	20/1		600		SHAKE STATION ACCESSORY	46	GFCI
GFCI	47	FREEZER			1140	20/1	20/1			600	SHAKE STATION ACCESSORY	48	GFCI
GFCI	49	PREP TABLE	1800			20/1	20/1				SPARE	50	
GFCI	51	MILK DISPENSER		180		20/1	20/1				SPARE	52	
	53	SPARE				20/1	20/1				SPARE	54	
HPL	55	COOLER EVAP COIL	1332			15/1					SPACE ONLY	56	
	57	SPARE				20/1					SPACE ONLY	58	
	59	SPARE				20/1					SPACE ONLY	60	
		TOTALS:	8036	7180	8472			7500	2320	3320			

NOTES:
* PROVIDE HANDLE TIES FOR ALL MULTIWIRE BRANCH CIRCUITS. SEE SPECIFICATIONS FOR OTHER OPTIONS REQUIRED.
GFCI CIRCUIT BREAKER SHALL BE GROUND-FAULT CIRCUIT INTERRUPTING (GFCI) TYPE
GFPE CIRCUIT BREAKER SHALL BE GROUND-FAULT PROTECTION OF EQUIPMENT (GFPE) TYPE
ST CIRCUIT BREAKER SHALL BE EQUIPPED WITH SHUNT TRIP COIL
HPL CIRCUIT BREAKER SHALL HAVE HANDLE PADLOCK ATTACHMENT TO LOCK BREAKER IN OPEN POSITION
C-# CIRCUIT SHALL BE ROUTED THROUGH CONTACTOR, # = CONTACTOR NUMBER

PHASE A VOLT-AMPS : 15536 VA.
PHASE B VOLT-AMPS : 9500 VA.
PHASE C VOLT-AMPS : 11792 VA.

TOTAL DEMAND AMPS = 36828 VOLTS-AMPS ÷ (√3 • PHASE VOLTAGE 208 VOLTS) = 102 AMPS

PANEL "L" SCHEDULE

FED FROM: POWER PANEL "MDP"
VOLTAGE: 120/208V, 3 PHASE, 4 WIRE
BUS MATERIAL: ALUMINUM OR COPPER
BUS LOAD: 84 AMPS
BUS RATING: 100 AMPS
MAIN: MAIN LUG ONLY

MOUNTING: SEMI-FLUSH MOUNTED
ENCLOSURE: NEMA 1
FAULT CURRENT: 15858 AMPS
AIC RATING: 22 kAIC
OPTIONS*: BONDED EQUIPMENT GROUND BAR

NOTES	CKT.	LOAD DESCRIPTION	LOAD (VA) A	LOAD (VA) B	LOAD (VA) C	BREAKER	BREAKER	LOAD (VA) A	LOAD (VA) B	LOAD (VA) C	LOAD DESCRIPTION	CKT.	NOTES
C-INT	1	BOH LIGHTING	604			20/1	20/1	1200			SIGNAGE	2	C-EXT
C-INT	3	DECORATIVE HEAT LAMPS		1125		20/1	20/1		540		SHOW WINDOW REC.	4	
C-INT	5	PENDANT LIGHTING			205	20/1	20/1			420	SODA DISPENSER	6	GFCI
C-INT	7	TRACK LIGHTING	348			20/1	20/1	180			RECEPT.	8	
C-INT	9	DINING LIGHTS		192		20/1	20/1		900		KDS SYSTEM	10	GFCI/ C-ST
C-EXT	11	SIGNAGE			1200	20/1	20/1			900	POS	12	GFCI
C-EXT	13	SIGNAGE	1200			20/1	20/1				SPARE	14	
	15	RECEPT.		540		20/1	20/1				SPARE	16	
	17	SHOW WINDOW REC.			1260	20/1	20/1				SPARE	18	
	19	DRIVE THRU WINDOW	1200			20/1	20/1				SPARE	20	
	21	DRIVE THRU MENU		1200		20/1	20/1				SPARE	22	
	23	SPARE				20/1	20/1				SPARE	24	
	25	SPARE				20/1	20/1				SPARE	26	
	27	SPARE				20/1	20/1				SPARE	28	
	29	SPARE				20/1	20/1				SPARE	30	
	31	SPACE ONLY									SPACE ONLY	32	
	33	SPACE ONLY									SPACE ONLY	34	
	35	SPACE ONLY									SPACE ONLY	36	
	37	SPACE ONLY									SPACE ONLY	38	
	39	SPACE ONLY									SPACE ONLY	40	
	41	SPACE ONLY									SPACE ONLY	42	
		TOTALS:	3352	3057	2665			1380	1440	1320			

NOTES:
* PROVIDE HANDLE TIES FOR ALL MULTIWIRE BRANCH CIRCUITS. SEE SPECIFICATIONS FOR OTHER OPTIONS REQUIRED.
GFCI CIRCUIT BREAKER SHALL BE GROUND-FAULT CIRCUIT INTERRUPTING (GFCI) TYPE
C-# CIRCUIT SHALL BE ROUTED THROUGH CONTACTOR, # = CONTACTOR NUMBER

PHASE A VOLT-AMPS : 4732 VA.
PHASE B VOLT-AMPS : 4497 VA.
PHASE C VOLT-AMPS : 2985 VA.

TOTAL DEMAND AMPS = 13214 VOLTS-AMPS ÷ (√3 • PHASE VOLTAGE 208 VOLTS) = 37 AMPS

PAUL DHANENS • ARCHITECT

ARCHITECT

PAUL DHANENS
NO. C-23843
RENEWAL
STATE OF CALIFORNIA

5100 CALIFORNIA AVE., SUITE 107
BAKERSFIELD, CALIFORNIA 93309
TELEPHONE: (661) 326-8336
FACSIMILE: (661) 326-8337

CONSULTANT

COPYRIGHT

PAUL DHANENS ARCHITECT expressly reserves its copyright and other property rights in these documents which are not to be reproduced, changed or copied in any written, graphic or electronic form, nor assigned to any third party without the expressed written consent of PAUL DHANENS ARCHITECT.

NOTICE TO CONTRACTORS
Written dimensions on these drawings shall take precedence over scaled dimensions. Contractors shall verify and be responsible for confirming all dimensions and shall notify the architect immediately of any descripancies or field variations discovered.

PROJECT

TENANT IMPROVEMENT FOR

FAMOUS FOR Steak 'n Shake STEAKBURGERS

1966 WEST AVE L
LANCASTER, CA

DATE	ISSUED FOR
9-24-18	BUILDING DEPT SUBMITTAL
6-26-19	

NO.	REVISIONS
△	
△	
△	
△	

ELECTRICAL

FILE NAME: 2366A2-0

SHEET

E-501

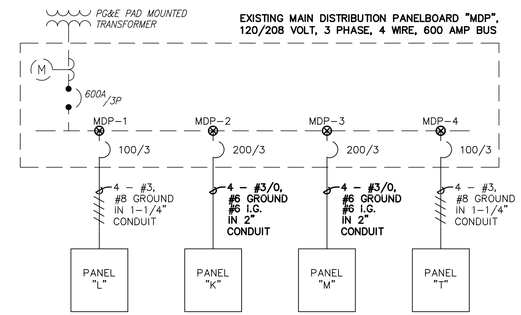

1 ONE-LINE DIAGRAM

NOT TO SCALE

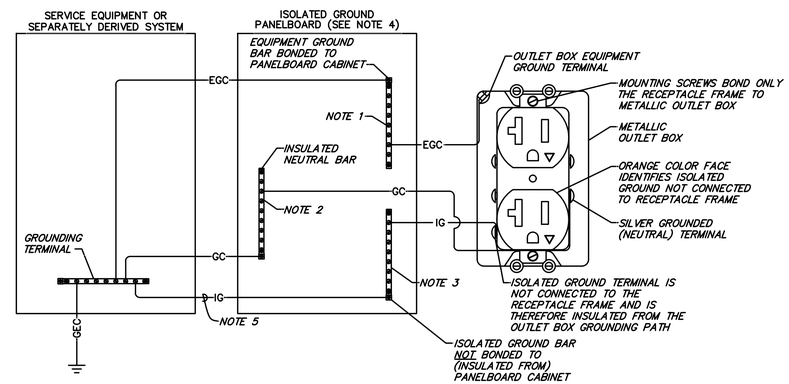

GENERAL NOTES APPLICABLE TO THIS DETAIL:

A. THIS DETAIL IS DIAGRAMMATIC IN NATURE AND IS NOT INTENDED TO INDICATE PROPOSED CIRCUIT ROUTING. PHASE CONDUCTORS AND RACEWAYS ARE NOT SHOWN FOR CLARITY. ALL RACEWAYS SHALL BE SECURELY BONDED TO THE ENCLOSURES THE RACEWAYS CONNECT.

B. A GREEN EQUIPMENT GROUND CONDUCTOR IS REQUIRED FOR EVERY APPLIANCE BRANCH CIRCUIT, EVERY GENERAL-PURPOSE BRANCH CIRCUIT, EVERY INDIVIDUAL BRANCH CIRCUIT, AND EVERY MULTI-WIRE BRANCH CIRCUIT. UNDER NO CIRCUMSTANCES WILL A METALLIC RACEWAY SYSTEM BE ACCEPTED AS THE SOLE MEANS OF EQUIPMENT GROUNDING.

C. GROUNDED (NEUTRAL) CONDUCTORS ARE ONLY REQUIRED FOR 120V LOADS OR POLYPHASE LOADS THAT REQUIRE 120V POWER.

D. WHEN INSTALLED PER THE CURRENT NATIONAL ELECTRICAL CODE REQUIREMENTS, AT LEAST TWO GROUND CONDUCTOR PATHS ARE REQUIRED; ONE FOR THE RECEPTACLE GROUND AND ONE FOR THE RECEPTACLE.

NOTES APPLICABLE TO THIS DETAIL:

1. ONLY EQUIPMENT GROUNDING CONDUCTORS SHALL TERMINATE ON THIS EQUIPMENT GROUND BAR. UNDER NO CIRCUMSTANCES SHALL ANY ISOLATED GROUNDING OR GROUNDED CONDUCTOR (NEUTRAL) CONDUCTORS TERMINATE ON THIS BAR.
2. ONLY GROUNDED (NEUTRAL) CONDUCTORS SHALL TERMINATE ON THIS NEUTRAL BAR. UNDER NO CIRCUMSTANCES SHALL ANY ISOLATED GROUNDING OR EQUIPMENT GROUNDING CONDUCTORS TERMINATE ON THIS BAR.
3. ONLY ISOLATED GROUNDING CONDUCTORS SHALL TERMINATE ON THIS ISOLATED GROUND BAR. UNDER NO CIRCUMSTANCES SHALL ANY EQUIPMENT GROUNDING OR GROUNDED CONDUCTOR (NEUTRAL) CONDUCTORS TERMINATE ON THIS BAR.
4. UNLESS INDICATED OTHERWISE, CIRCUITS SERVED BY THIS PANEL SHALL BE ROUTED IN DEDICATED RACEWAYS AND SHALL NOT BE COMBINED IN THE SAME RACEWAY WITH NON-ISOLATED GROUND CIRCUITS.
5. ISOLATED GROUNDING CONDUCTOR IS PERMITTED TO PASS THROUGH PANELBOARDS BUT MUST TERMINATE AT THE SERVICE EQUIPMENT GROUNDING TERMINAL OR AT THE GROUNDING TERMINAL OF THE SEPARATELY DERIVED SYSTEM, IF APPLICABLE, UNLESS INDICATED OTHERWISE.

CONDUCTOR LEGEND

—GC—	GROUNDED CONDUCTOR (NEUTRAL)
—EGC—	EQUIPMENT GROUNDING CONDUCTOR
—IG—	ISOLATED GROUNDING CONDUCTOR
—GEC—	GROUNDING ELECTRODE CONDUCTOR

3 ISOLATED GROUND SYSTEM DETAIL

NOT TO SCALE

PAUL DHANENS • ARCHITECT

ARCHITECT

REGISTERED ARCHITECT PAUL DHANENS NO. C-23843 RENEWAL STATE OF CALIFORNIA

5100 CALIFORNIA AVE., SUITE 107
BAKERSFIELD, CALIFORNIA 93309
TELEPHONE: (661) 326-8936
FACSIMILE: (661) 326-8937

CONSULTANT

COPYRIGHT

PAUL DHANENS ARCHITECT expressly reserves its copyright and other property rights in these documents which are not to be reproduced, changed or copied in any written, graphic, electronic or mechanical manner, nor assigned to any third party without the expressed written consent of PAUL DHANENS ARCHITECT.

NOTICE TO CONTRACTORS
Written dimensions on these drawings shall take precedence over scaled dimensions. Contractor shall verify and be responsible for confirming all dimensions and shall notify the architect immediately of any descrepancies or field variations discovered.

PROJECT

TENANT IMPROVEMENT FOR

FAMOUS FOR Steak 'n Shake STEAKBURGERS

1966 WEST AVE L
LANCASTER, CA

DATE	ISSUED FOR
9-24-18	BUILDING DEPT SUBMITTAL
6-26-19	

NO.	REVISIONS
△	
△	
△	
△	

ELECTRICAL

FILE NAME: 2366A2-0

SHEET

E-502

SECTION 260000 – ELECTRICAL GENERAL CONDITIONS

PART 1 GENERAL
1.01 SUMMARY
A. This Section supplements all Sections of the Specifications for Division 26, Division 27, and Division 28 and shall apply to all phases of work hereinafter specified, shown on the Drawings, or required to provide a complete installation of approved electrical systems.
B. The Drawings, General Conditions and General Provisions of the Contract apply to this Section and the other Sections of Division 26, Division 27, and Division 28 of the specifications. Where conflicts arise between these documents, the more stringent provision will be applicable, subject to the interpretation of the Engineer.
C. Furnish all labor, material, services, and skilled supervision necessary for the construction, erection, installation, connections, testing, and adjustment of all materials and electrical equipment specified herein, or shown or noted on the Drawings, and its delivery to the Owner, complete in all respects and ready for use.
D. Where plans indicate fixtures or equipment will be furnished by this Contractor for installation by other Contractors, this Contractor shall furnish all such equipment, complete in all respects and ready for installation. Drawings, instructions, and manuals supplied with equipment shall be carefully preserved and turned over to the installing Contractor.
E. Where plans indicate fixtures or equipment will be furnished by others, this Contractor shall provide all rough-in and supplies and shall connect such equipment to the electrical system. Drawings, instructions, and manuals supplied with equipment shall be carefully preserved and turned over to the Architect.
1.02 DEFINITIONS
A. Work: The construction and services required by the Contract Documents whether completed or partially completed and includes all labor, materials, equipment, and services provided or to be provided by the Contractor to fulfill the Contractor's obligations. The work may constitute the whole or a part of the project.
B. Furnish: To supply and deliver, unload, and inspect for damage.
C. Install: To unpack, assemble, erect, apply, place, finish, cure, protect, clean, connect, and place into operation into the work.
D. Provide: To furnish and install.
E. Connect: To bring service to the equipment and make final attachment including necessary switches, outlets, boxes, terminations, etc.
F. Concealed: Hidden from sight in chases, furred spaces, shafts, hung ceilings, embedded in construction, in crawl spaces, or buried.
G. Exposed: Not installed underground nor concealed as defined.
H. Drawings: All plans, details, equipment schedules, diagrams, sketches, etc. issued for the construction of the work.
I. Conduit: Conduit, and all required fittings, pull boxes, hangers, and other supports and accessories related to such conduit.
1.03 CODES AND STANDARDS
A. Perform work in accordance with the applicable Building Code, Electrical Code, Fire Code, Mechanical Code, Plumbing Code, Energy Code, and all other applicable codes, amendments, and ordinances. Also perform all work in accordance with the Occupational Safety and Health Administration (OSHA) Regulations, Americans with Disabilities Act (ADA), the Authority Having Jurisdiction, Landlord requirements including Tenant Criteria Manuals and Lease Exhibits, and utility company requirements.
B. Recognized Standards: Design, manufacture, testing and method of installation of all apparatus and materials furnished under the requirements of these Specifications shall conform to the latest publications or standard rules of Institute of Electrical and Electronic Engineers (IEEE), National Electrical Manufacturers Association (NEMA), Underwriters Laboratories, Inc. (U.L.), National Fire Protection Association (NFPA), American Society for Testing and Materials (ASTM), American National Standards Institute (ANSI), National Electrical Code (NEC), National Electrical Safety Code (NESC), National Electrical Contractors Association (NECA), and American Institute of Steel Construction (AISC).
C. Code or utility company requirements supersede any requirements of the Drawings and/or Specifications. The Contract Documents take precedence where the Contract Documents exceed code, Landlord, utility, or recognized standards requirements.
1.04 PERMITS AND FEES: Permits, licenses, fees, inspections and arrangements required for the work under this Contract shall be obtained by the Contractor at his expense.
1.05 TEMPORARY SERVICES FOR CONSTRUCTION
A. Provide a temporary electrical service, including all required equipment such as transformers, generators and fuel, panelboards, etc. as required by all trades. Coordinate power requirements for the temporary service with the General Contractor and the utility company prior to the start of construction. The Contractor is responsible to develop all temporary service plans and specifications as required by the Authority Having Jurisdiction, submit those plans and specifications as required by the Authority Having Jurisdiction, and to pay for all temporary service energy consumption.
B. Provide all temporary lighting necessary to provide lighting levels in compliance with OSHA Regulations and as required by all trades.
1.06 CONTRACT DRAWINGS
A. Obtain, fully understand, and coordinate the work with the complete set of Contract Documents. Any required corrections, including all associated costs, arising from lack of coordination with the complete set of Contract Documents is the Contractor's sole responsibility.
B. Work under these Sections is diagrammatic and is intended to convey the scope of work and indicate the general arrangement of equipment, conduit, and outlets. Obtain instructions from the Architect/Engineer prior to rough-in wherever a question exists as to the exact intended location of outlets or equipment.
C. Promptly report and discrepancies discovered within the Contract Documents. Failure of the Contractor to report discrepancies shall result in the resolution becoming the Contractor's responsibility and subject to the Architect/Engineer's review and possible rejection. Should the Architect/Engineer reject a discrepancy resolution of which they were not notified, the Contractor is fully responsible to correct the installation, including all associated costs, until approval of the installation is given by the Architect/Engineer.
1.07 SHOP DRAWINGS: Furnish the Architect shop drawing portfolios containing names of manufacturer and cut sheets of equipment to be used on the project. Provide shop drawings for metering equipment, panelboards, luminaires, wiring devices, lighting controls, enclosed switches, surge protection devices, and fire detection and alarm systems, including fully engineered drawings, voltage drop calculations, and battery calculations. Fire detection and alarm drawings shall bear the review stamp of the Authority Having Jurisdiction. Approval shall not relieve the Contractor from responsibility for errors on the shop drawings.
1.08 QUALITY ASSURANCE
A. All components shall be listed and classified by Underwriters Laboratories, Inc. as suitable for the purpose and free of all rust/corrosion or any visible damage. All items not complying with this requirement shall be replaced without any change in the Contract amount.
B. Unless otherwise specified, all equipment, devices, luminaires, and materials of the same type or classification and used for the same purpose shall be products of the same manufacturer. Use only new, un-weathered, and unused material, except as specifically noted.
C. Equipment performance and accessories shall be as indicated on the Drawings and/or specified herein. Inclusion in both locations is not a prerequisite to inclusion in the Contract; equipment and accessories specified in either location shall be included in the Contract. Provide all necessary accessories and connections as required for a complete, functional system, including all required components reasonably inferred to as necessary although such components may or may not be specifically indicated in the Contract Documents.
1.09 DELIVERY, STORAGE, AND HANDLING: Accept all materials on site and inspect for damage and protect from corrosion and entrance of debris. Handle all materials in accordance with manufacturer's instructions to avoid damage to internal components, enclosures, and finishes.
1.10 WARRANTY AND GUARANTEE: Provide a complete parts and labor warranty and guarantee on all systems for a period of one year from Owner acceptance of the completed facility. This warranty and guarantee shall cover all failures unless such failure is directly attributable to vandalism or causes other than defects in material or workmanship.

PART 2 PRODUCTS
2.01 CONDUCTOR TERMINATIONS: Provide conductor terminations rated at a minimum of 75 degrees C in all equipment.
2.02 SUBSTITUTIONS: The products specified in the Contract Documents constitute the Basis of Design for the Construction Documents and set minimum standards for quality, design, and functionality. Other products are permitted to be submitted, at the Contractor's option, during shop drawing review unless indicated otherwise. Any substitute products shall meet or exceed all requirements specified. Any costs and coordination issues arising out of any substitution, including coordination with all other contractors and subcontractors and any associated costs, is the substituting contractor's sole responsibility.

PART 3 EXECUTION
3.01 COORDINATION OF WORK
A. Work lines and established heights shall be in strict accordance with architectural drawings and specifications. Verify all dimensions shown and establish all elevations and detailed dimensions not shown prior to rough-in.
B. Promptly report any difficulties encountered in the installation of the work which might prevent prompt and proper installation. Failure to report shall constitute an acceptance of the work of other trades as being fit and proper for the execution of this work.
C. Coordinate the work with all trades so that it proceeds without delay and minimizes interference to work that is in progress or has not been completed. Conflicts arising from lack of coordination shall be this Contractor's responsibility. The Electrical Contractor shall pay for all extra cutting and patching necessary by any lack of coordination.
D. Arrange all conduit runs in such a manner that it does not interfere with grilles, diffusers, outlet boxes, luminaires, or other items while providing for maximum headroom. Maintain access to equipment requiring service when selecting mounting elevations.
E. Afford other trades reasonable opportunity for the execution of their work and connect the work of other trades as to not delay or interfere with their work.
F. Explicitly follow all manufacturer's instruction instructions and promptly report any conflicts between the manufacturer's installation instructions and the Contract Documents.
G. Provide all supplementary or miscellaneous items, appurtenances, and devices incidental to or necessary for a sound, secure and complete installation.
H. Verify and coordinate all requirements and installation details of all materials and equipment prior to rough-in. Obtain and review shop drawings, product data, manufacturer's wiring diagrams, and manufacturer's instructions for equipment furnished under other Sections. Determine connection locations and requirements, sequence rough-in of electrical connections to coordinate with installation of equipment, sequence electrical connections to coordinate with start-up of equipment, and verify that proper power supply is available prior to subcontractor's ordering equipment. Verify proper voltage, phase, and current rating of power supply and report any discrepancies prior to order, connection of equipment, or start-up. Responsibility for verification of proper power supply voltage and any damage resulting from incorrect connections shall rest with this Contractor and any conflicts arising from lack of coordination shall be this Contractor's responsibility.
3.02 ACCESS TO EQUIPMENT: Install all equipment, starters, switches, receptacles, and boxes so that all parts are easily accessible for inspection, operation, maintenance, and repair. Provide access doors, fire rated where required, for concealed equipment.
3.03 CUTTING, PATCHING, AND PIERCING
A. Cut all openings in a neat workmanlike manner, only as large as required for the installation, and leave surfaces around openings smooth and finished to match surrounding surface.
B. Patch existing finished surfaces and building components using new materials matching existing materials.
C. Fire and/or Smoke Rated Assemblies: Become familiar with all fire and/or smoke rated construction and install work to maintain the integrity of those ratings.
D. Roof Penetrations: Coordinate with the Roofing Contractor to provide any required roof penetrations.
3.04 FIELD QUALITY CONTROL
A. Install all equipment, devices, luminaires, and materials plumb, level, securely, and in a neat and workmanlike manner in accordance with NFPA 70 and all applicable NECA and NEMA standards.
B. Adjust all flush mounted equipment, boxes, cabinets, and enclosures such that they are flush with finished wall or flooring material.
C. Replace or refinish damaged equipment, devices, luminaires, materials, and surfaces where marring or disfigurement has occurred.
D. Clean electrical parts to remove harmful materials. Clean exposed surfaces of all equipment, devices, luminaires, and materials and the interior of all boxes, enclosures, and cabinets of all foreign materials.
E. Paint all electrical equipment and materials located on exterior walls, on the roof where exposed to view, where visible from 6'-0" above grade from any property line, and all exposed conduit to match the surrounding surfaces. Coordinate paint color with the Architect.
3.05 TESTING AND INSPECTION
A. Testing: Test the entire system under operating conditions over a sufficient period of time to establish the adequacy, quality, safety, completed status, and suitable operation of all equipment, devices, systems, etc.
B. Inspection: Obtain all required certificates of inspection and approval.
3.06 PROJECT CLOSEOUT
A. Project Record Documents: Provide one printed copy and one electronic copy of project record drawings to the Owner. Project record drawings shall reflect the actual "as-built" conditions and shall include locations of all equipment, devices, and luminaires, circuiting arrangements, routing of all underfloor conduits, routing of conduits larger than 2 inches, locations and mounting heights of all outlet, pull, and junction boxes, locations of all items requiring maintenance and inspection, and locations of components and circuiting and switching arrangements of lighting controls.
B. Operation and Maintenance Data: Provide one printed copy and one electronic copy of operation and maintenance data for all equipment, devices and luminaires to the Owner. Operation and maintenance data shall include manufacturer's cut sheets, maintenance procedures, recommended maintenance intervals, wiring diagrams, parts lists, manufacturers' warranties, certificates, and test reports of each item installed.
C. Maintenance Materials: Provide to the Owner two keys for each different enclosure and cabinet, including panelboards, two spare fuses of each type and size, and one fuse puller.
D. Test Reports: Provide one printed copy and one electronic copy of all completed test reports to the Owner.
END OF SECTION

SECTION 260502 – TRENCHING AND BACKFILL FOR ELECTRICAL

PART 1 GENERAL
1.01 DEFINITIONS
A. Subgrade Elevations: 4 inches below finish grade unless directed otherwise.
B. Finish Grade Elevations: 4 inches above subgrade unless directed otherwise.
1.02 PROJECT CONDITIONS
A. Provide sufficient quantities of fill and store materials on site in advance of need. Separate differing materials with dividers or stockpile separately and protect stockpiles from erosion and deterioration of materials.
B. Verify all survey bench marks and intended elevations for the work.
C. Protect all existing landscaping, hardscaping, existing structures, benchmarks, survey control points, and other features to remain from excavating equipment and vehicular traffic.

PART 2 PRODUCTS
2.01 FILL MATERIALS
A. General Fill: Subsoil excavated from site and free of lumps larger than 3 inches, rocks larger than 2 inches, and debris.
B. Granular Fill: Natural stone pea gravel free of clay, shale, and organic matter.
C. Topsoil: Select topsoil excavated from site and free of roots, rocks larger than 1/2 inch, subsoil, debris, large weeds and foreign matter.

PART 3 EXECUTION
3.01 EXAMINATION
A. Identify required lines, levels, contours, and datum locations.
B. Locate and identify all utilities and protect same from damage.
3.02 TRENCHING
A. Report any unexpected subsurface conditions and discontinue affected work in area until notified to resume.
B. Do not interfere with 45 degree bearing splay of foundations.
C. Cut trenches wide enough to allow inspection of installed utilities. Slope banks of excavations deeper than 4 feet to angle of repose or less until shored.
D. Hand trim excavations and remove loose matter, large stones, and other hard matter which could damage utilities or impede consistent backfilling or compaction.
3.03 PREPARATION FOR UTILITY PLACEMENT
A. Replace soft areas of subgrade not capable of compaction with general fill.
B. Compact subgrade to density equal to or greater than requirements for subsequent fill material.
C. Maintain excavations and prevent loose soil from falling into excavation until ready for backfill.
3.04 BEDDING AND FILL
A. Backfill to contours and elevations required using unfrozen materials and a placement method that does not disturb or damage other work.
B. Unless indicated otherwise, use granular fill bedding covered with general fill up to finished grade elevation and compact all fill materials in equal continuous layers not exceeding 8 inches compacted depth to 97 percent of maximum dry density.
C. Fill thrust bearing surfaces with concrete.
3.05 FIELD QUALITY CONTROL
A. Perform compaction density testing every 2 feet on compacted fill in accordance with ASTM D1556, ASTM D2167, ASTM D2922, or ASTM D3017. Evaluate results in relation to compaction curve in accordance with ASTM D698, ASTM D1557, or AASHTO T 180. Remove, replace, and retest fill if tests indicate work does not meet specified requirements.
END OF SECTION

SECTION 260519 – CONDUCTORS AND CABLES

PART 1 GENERAL – NOT USED

PART 2 PRODUCTS
2.01 BUILDING WIRE AND CABLES
A. Provide single conductor building wire installed in raceway unless indicated otherwise, otherwise permitted, or otherwise required.
B. All conductors shall be copper conductors with 600V insulation; type THHN for dry and damp locations and type THWN-2 for wet locations.
C. Metal Clad Cable (Type MC): Permitted only for branch circuits in concealed locations and only when approved by applicable codes and amendments and the Authority Having Jurisdiction. Exposed MC Cable is not permitted; no exceptions.
1. All MC Cable sheaths shall be listed and identified for grounding.
2. All MC Cable shall be equipped with copper equipment grounding conductor. No exceptions.
D. Nonmetallic-Sheathed Cable (Type NM): Type NM-B permitted only for branch circuits in concealed locations within individual dwelling units and only when approved by applicable codes and amendments and the Authority Having Jurisdiction. Exposed NM Cable and NM Cable used outside individual dwelling units is not permitted; no exceptions.
E. All conductors 12 AWG and smaller shall be solid. Conductor size 10 AWG is permitted to be solid or stranded. Use stranded conductors for all conductors 8 AWG and larger.
F. Use 12 AWG conductors, minimum, for all circuits unless indicated otherwise or as modified as follows:
1. 20A, 120V circuits longer than 75 feet: 10 AWG to offset voltage drop.
2. 20A, 120V circuits longer than 150 feet: 8 AWG to offset voltage drop.
3. 20A, 277V circuits longer than 150 feet: 10 AWG to offset voltage drop.
2.02 CONTROL CABLES
A. All control cable conductor sizes, quantities, stranding, and shielding as recommended by the manufacturer and required for the installation but no smaller than 18 AWG.
B. Horizontal Applications in Conduit: Type CL2 unless otherwise required.
C. Horizontal Applications not in Conduit: Type CL2P unless otherwise required.
D. Riser Applications: Type CL2R unless otherwise required.
2.03 COMMUNICATIONS CABLES: See Section 271005.
2.04 WIRING CONNECTORS
A. Use twist-on insulated spring connectors, mechanical connectors, or compression connectors for conductor sizes 8 AWG and smaller. Do not use push-in wire connectors as a substitute for twist-on insulated spring connectors.
B. Use mechanical connectors or compression connectors for conductor sizes 6 AWG and larger.
C. Use crimped terminals for all control circuit conductor connections.

PART 3 EXECUTION
3.01 PREPARATION: Clean raceways thoroughly to remove foreign materials before installing conductors and cables.
3.02 COLOR CODING
A. Color code conductors as follows and maintain consistent color coding throughout project including branch circuit conductors.
1. 208Y/120 V, 3 phase, 4 Wire System
a. Phase A: Black
b. Phase B: Red
c. Phase C: Blue
d. Neutral/Grounded: White
2. Equipment Ground: Green
3. Isolated Ground: Green with yellow stripe
3.03 INSTALLATION
A. Circuit routing indicated is diagrammatic. Arrange circuiting to minimize splices and include circuit lengths required to install connected devices within 10 feet of location shown.
B. Combining branch circuits in a single raceway is permitted under the following conditions:
1. Provide no more than six current-carrying conductors in a single raceway. Dedicated neutral conductors are considered current-carrying conductors.
2. Increase size of conductors as required to account for ampacity derating.
3. Size raceways, boxes, etc. to accommodate conductors.
C. Neutral Conductors:
1. Provide separate neutral conductors for:
a. Branch circuits protected by ground fault circuit interrupter (GFCI) circuit breakers.
b. Branch circuits protected by arc fault circuit interrupter (AFCI) circuit breakers.
c. Branch circuits protected by shunt trip circuit breakers.
d. Branch circuits fed from feed-through protection of GFCI receptacles.
e. Branch circuits with dimming controls.
f. Branch circuits that serve emergency lighting equipment such as emergency batteries or emergency lighting unit equipment.
g. Where indicated by the wire counts shown on the Drawings.
2. Multiwire branch circuits (shared neutrals) are permitted where not otherwise indicated.
a. Locate all multiwire branch circuits in vertically adjacent panelboard pole spaces and provide circuit breaker handle ties to simultaneously disconnect all ungrounded circuit conductors.
D. Pull all conductors together into raceway at same time, do not damage conductors or exceed manufacturer's recommended maximum pulling tension or sidewall pressure, and use suitable wire pulling lubricant where recommended by the manufacturer.
E. Secure and support conductors and cables in accordance with NFPA 70 using supports and methods approved by the Authority Having Jurisdiction. Provide independent support from building structure; do not support from raceways, piping, ductwork, suspended ceiling support systems, or other systems and do not allow conductors or cables to lay on ceiling tiles.
F. Cut all cables per the manufacturer's recommendations and terminate using suitable fittings including anti-short, insulated bushings where applicable.
G. Provide a minimum of 12 inches of slack at each outlet. Provide a minimum of 5 feet of slack where conductors are installed in enclosures for future termination by others.
H. Neatly train and bundle conductors inside boxes, wireways, panelboards and other equipment enclosures.
I. Make wiring connections using specified wiring connectors and make splices and taps only in accessible boxes. Do not pull splices into raceways or make splices in conduit bodies.
J. Do not remove conductor strands to facilitate insertion into connector. Provide connectors suitable for reducing to appropriate size, but not less than required for the rating of the overcurrent protective device, where conductors are larger than the equipment terminations can accommodate.
K. Insulate splices and taps that are made with uninsulated connectors using insulating covers specifically designed for the connectors, or electrical tape for dry or damp locations. Use heat shrink tubing for wet locations.
L. Provide final connections to all equipment and devices, including those furnished by others, as required for a complete operating system.
M. Provide all control wiring and communications cabling, whether or not shown on the Drawings, per manufacturer's recommendations and as required for a complete and operational system.
END OF SECTION

SECTION 260526 – GROUNDING AND BONDING

PART 1 GENERAL
1.01 MAXIMUM GROUNDING SYSTEM RESISTANCE: 5 ohms.

PART 2 PRODUCTS
2.01 ROD ELECTRODES: Copper, 3/4 inch diameter, 10 foot long solid rods. Sectional rods are not permitted.
2.02 CONCRETE ENCASED ELECTRODES: 4 AWG, 20 foot long bare copper wire.
2.03 WIRE: Copper wire sized to meet NFPA 70 requirements.
2.04 CONNECTORS AND ACCESSORIES: Copper, copper alloy, or bronze mechanical connectors.

PART 3 EXECUTION
3.01 INSTALLATION OF GROUNDING ELECTRODE SYSTEM
A. As applicable to the project, provide all components required for a complete grounding electrode system including bonding of metal underground water pipe, metal frame of the building, concrete-encased electrode, metal aboveground water piping system, metal aboveground gas piping system, and rod electrode(s) per NFPA 70 requirements.
3.02 INSTALLATION OF EQUIPMENT GROUNDING SYSTEM
A. Without exception, provide insulated equipment grounding conductor sized per NFPA 70 requirements within each feeder and branch circuit raceway and terminate each end on suitable lug, bus, or bushing.
3.03 INSTALLATION OF ISOLATED GROUNDING SYSTEM
A. Provide an additional isolated grounding conductor for circuits serving isolated ground receptacles. Isolated grounding conductors shall be isolated from the isolated grounding receptacle to the isolated ground bus in the upstream panelboard.
3.04 TESTING
A. Measure grounding resistance using a 3 point Megger test. Provide additional rod electrodes as required to reduce grounding resistance to less than the specified maximum permitted value.
END OF SECTION

SECTION 260529 – HANGERS AND SUPPORTS FOR ELECTRICAL SYSTEMS

PART 1 GENERAL – NOT USED

PART 2 PRODUCTS
2.01 HANGERS AND SUPPORTS
A. Corrosion-resistant materials of size and type adequate to carry the supported weight, including the weight of wire in conduit; do not use perforated pipe straps as a means of support.
2.02 ANCHORS AND FASTENERS
A. Use precast inserts, preset inserts, expansion anchors, or self-drilling anchors as approved by the Structural Engineer for concrete elements.
B. Use beam clamps, steel spring clips, steel ramset fasteners, or welded fasteners for steel elements.
C. Use toggle bolts or hollow wall fasteners for hollow masonry, plaster, and gypsum board partitions.
D. Use expansion anchors or preset inserts for solid masonry walls.
E. Use sheet metal screws for sheet metal elements and wood screws for wood elements.

PART 3 EXECUTION
3.01 INSTALLATION
A. Provide all required blocking and supplemental framing required to securely support all materials.
B. Fasten supports to building structure and surfaces only. Do not fasten supports to pipes, ducts, mechanical equipment, conduit, or ceiling suspension wires.
C. Obtain permission from Structural Engineer before drilling or cutting structural members or before using powder-actuated anchors.
D. Rigidly weld support members or use hex-bolts to present neat appearance with adequate strength and rigidity. Provide lock washers under all nuts.
E. Install surface-mounted cabinets and panelboards with minimum of four anchors.
F. Provide steel channel supports behind all cabinets and panelboards located in damp or wet locations to stand enclosures 1 inch off wall.
G. Provide supports for all low voltage wiring not routed in conduit.
END OF SECTION

SECTION 260534 – CONDUIT AND WIREWAYS

PART 1 GENERAL – NOT USED

PART 2 PRODUCTS
2.01 CONDUIT
A. Size: As required by NFPA 70 for the conductors installed but no smaller than specified.
B. Underground: 3/4 inch minimum rigid metal conduit, intermediate metal conduit, Schedule 80 PVC, or Schedule 40 PVC. Metal conduits shall be galvanized or PVC coated.
C. Outdoor Locations above Grade: 1/2 inch minimum rigid metal conduit or intermediate metal conduit. Nonmetallic conduit is not permitted above grade. Conduits shall be galvanized or PVC coated.
D. Within Slabs above Grade: 3/4 inch minimum rigid metal conduit, intermediate metal conduit, or Schedule 80 PVC. Metal conduits shall be galvanized or PVC coated. Coordinate with the Structural Engineer for restrictions and limitations on conduits installed in slabs above grade.
E. Exposed Wet and Damp Locations: 1/2 inch minimum rigid metal conduit or intermediate metal conduit. Conduits shall be galvanized or PVC coated.
F. Connections to Vibrating Equipment and Luminaires in Dry Locations: 1/2 inch minimum flexible metal conduit.
G. Connections to Vibrating Equipment and Luminaires in Damp and Wet Locations: 1/2 inch minimum liquidtight flexible metal conduit.
H. All Other Dry Locations: 1/2 inch minimum rigid metal conduit, intermediate metal conduit, or electrical metallic tubing.
2.02 FITTINGS: Provide listed fittings identified for use with the conduit.
2.03 WIREWAYS: Square D Class 5100 Type LDB for dry locations or Square D Class 5100 Type LDR for damp and wet locations unless indicated otherwise; size as required by NFPA 70 based on conductor fill and bending radius requirements.

PART 3 EXECUTION
3.01 INSTALLATION
A. Conceal all conduit in all interior and exterior areas, including exposed structure areas, unless the Architect provides specific approval permitting the use of exposed conduit.
B. Route any exposed conduit parallel and perpendicular to walls.
C. Subject to the Architect's approval, conduit located above ceilings is permitted to be routed point-to-point provided it is secured and supported per NFPA 70 requirements and complies with all applicable Codes and other requirements of the specifications.
D. Do not embed conduit in slabs-on-grade. Locate conduit a minimum of 2 inches below the bottom surface of the slab to avoid future damage from cutting of the floor slab.
E. Route conduit in slabs-above-grade from point-to-point. Do not cross conduits embedded in slabs.
F. Route underground conduit from point-to-point and at a burial depth in compliance with NFPA 70, local code, and utility company requirements.
G. Arrange conduit to maintain headroom and present neat appearance and arrange supports to prevent misalignment during wiring installation.
H. Secure and support all conduit in compliance with NFPA 70 requirements and group adjacent conduits on steel channel racks and trapezes.
I. Provide 12 inches of clearance between conduit and piping or surfaces with temperatures exceeding 104 degrees F.
J. Install no more than equivalent of three 90 degree bends between boxes.
K. Provide sleeves when penetrating footings, masonry walls and floors and seal all penetrations through footings and floors water tight.
L. Provide suitable fittings to accommodate expansion and deflection where conduit crosses seismic, control, and expansion joints.
M. Provide suitable pull string in each empty conduit except sleeves and nipples.
N. Provide caps to protect installed conduit against entrance of dirt and moisture.
O. Secure wireway to building surfaces and close ends of wireway and unused conduit openings.
P. Ground and bond conduit and wireways as required by NFPA 70.
END OF SECTION

SECTION 260537 – BOXES

PART 1 GENERAL – NOT USED

PART 2 PRODUCTS
2.01 ALL BOXES
A. Nonmetallic boxes are not permitted unless indicated otherwise or without specific written approval from the Architect.
B. Provide all required box hangers and supports, extension rings, mud rings, etc. for a complete and secure installation.
C. Use gang boxes where more than one device is mounted together; do not use sectional boxes.
2.02 OUTLET AND SMALL JUNCTION BOXES
A. Dry and Damp Locations: Galvanized NEMA OS 1 stamped steel box rated for the weight of the equipment supported and sized per NFPA 70 requirements for the device(s) and conductors installed within.
B. Wet Locations: Galvanized cast metal NEMA FB 1 Type FD box with gasketed cover and threaded hubs and sized per NFPA 70 requirements for the device(s) and conductors installed within.
2.03 PULL AND LARGE JUNCTION BOXES
A. Dry and Damp Locations: Galvanized NEMA OS 1 stamped steel box sized per NFPA 70 requirements for the conductors installed within.
B. Wet Locations: Galvanized NEMA 250 Type 4 cast iron or cast aluminum box with ground flange, neoprene gasket, and stainless steel cover screws and sized per NFPA 70 requirements for the conductors installed within.
2.04 FLOOR BOXES
A. All Floor Boxes: All floor boxes located in slabs on grade shall be cast metal. Stamped steel floor boxes are only permitted in slabs above grade.
B. Indoor Flush Floor Boxes for Concrete Floors: Wiremold 880 OmniBox Series unless indicated otherwise with number of gangs as required for the devices installed within.
C. Indoor Flush Floor Boxes for Wood Floors: Wiremold 880W Series unless indicated otherwise with number of gangs as required for the devices installed within.
D. Indoor Recessed Floor Boxes: Wiremold RFB Series unless indicated otherwise with number of compartments as required for the devices installed within.
E. Exterior Floor Boxes: NEMA 3R while-in-use square exterior floorbox as manufactured by Combined Utilities Box Systems (CUBS) unless indicated otherwise with wiring devices indicated.

PART 3 EXECUTION
3.01 INSTALLATION
A. Install in locations indicated and as required for splices, taps, wire pulling, equipment connections, and as required by NFPA 70.
B. Install pull boxes and junction boxes above accessible ceilings and in unfinished areas only.
C. Install outlet boxes for all wall-mounted wiring devices at heights indicated in Section 262726 unless indicated otherwise. Coordinate mounting heights and locations of outlets mounted above counters, benches, and backsplashes prior to rough-in.
D. Use flush boxes in finished areas. Do not install flush boxes back-to-back in walls; provide minimum 6 inches and one stud separation.
E. Locate flush boxes in masonry walls to require cutting of masonry unit corner only. Coordinate masonry cutting to achieve neat opening.
F. Install all wall-mounted boxes plumb and level.
G. Install all ceiling-mounted boxes level and oriented parallel with building lines and ceiling grid tees where applicable.
H. Install all floor boxes level and oriented parallel with building lines and tile grout lines where applicable.
I. Vertically align adjacent wall mounted outlet boxes for switches, thermostats, similar devices.
J. Install concealed boxes within 6 inches from ceiling access panels, air distribution diffusers, or removable recessed luminaires.
K. Support boxes independently of conduit; do not support boxes from ceiling support wires.
L. Install knockout closures in unused box openings.
M. Install cover plates on boxes; see Section 262726 for cover plate specifications.
N. Ground and bond boxes as required by NFPA 70.
END OF SECTION

SECTION 260553 – IDENTIFICATION FOR ELECTRICAL SYSTEMS

PART 1 GENERAL – NOT USED

PART 2 PRODUCTS
2.01 NAMEPLATES: Engraved laminated plastic with 1/8 inch letters on contrasting background.
2.02 LABELS: As required by regulatory agencies.
2.03 WIRE MARKERS: Cloth, tape, split sleeve, or tubing type.

PART 3 EXECUTION
3.01 NAMEPLATES: Provide nameplates with the unique equipment designation at each electrical distribution and control equipment enclosure, communication cabinet, and control device station.
3.02 WARNING LABELS: Provide all regulatory required and industry standard warning labels on all electrical equipment, including high-voltage, tested series rated combination, and arc flash hazard labeling.
3.03 WIRE MARKERS: Provide wire and cable markers at panelboard gutters, pull boxes, outlet boxes, and junction boxes for each load connection. Indicate branch circuit or feeder number indicated on Drawings and control wire number indicated on shop drawings.
3.04 COLOR CODE LEGEND: Provide identification label identifying conductor color codes at each piece of feeder or branch-circuit distribution equipment.
3.05 INSTALLATION
A. Install nameplates and labels parallel to equipment lines.
B. Secure nameplates for distribution equipment visible to the public to the inside surface of door.
C. Secure nameplates for distribution equipment not visible to the public to the front of the enclosure using screws, rivets, or adhesive.
END OF SECTION

SECTION 260595 – FIRE STOPPING

PART 1 GENERAL
1.01 PREPARATION: Examine the complete set of Drawings and identify all fire rated partitions, floors and assemblies and identify appropriate firestopping method for the assembly.

PART 2 PRODUCTS
2.01 FIRESTOPPING ASSEMBLIES: Use only systems listed by UL or FM or tested in accordance with ASTM E 814 or ASTM E 119 that have F Rating equal to fire rating of penetrated assembly and minimum T Rating Equal to F Rating.
2.02 MATERIALS: Elastomeric silicone firestopping, foam firestopping, fibered compound firestopping, fiber packing material, mechanical firestop devices, intumescent putty, and firestop pillows are permitted.

PART 3 EXECUTION
3.01 INSTALLATION
A. Comply with firestopping manufacturer's recommendations for temperature and other environmental conditions before, during, and after installation. Provide ventilation in areas where solvent-cured materials are being installed.
B. Protect adjacent surfaces from damage by material installation.
C. Clean substrate surfaces of dirt, dust, grease, oil, loose material, or other matter which may affect bond of firestopping material. Remove incompatible materials which may affect bond. Install backing materials to arrest liquid material leakage.
D. Apply the appropriate fire stopping materials and systems to maintain the fire rating of the partition, floor, or ceiling assembly being penetrated.
E. Install materials in manner described in fire test report and in accordance with manufacturer's instructions, completely closing openings.
F. Do not cover installed firestopping until inspected by Authority Having Jurisdiction.
G. Install any labeling required by Code.
H. Clean adjacent surfaces of firestopping materials.
END OF SECTION

SECTION 260918 – REMOTE CONTROL SWITCHING DEVICES

PART 1 GENERAL
1.01 PREPARATION
A. Hold meeting with the Owner prior to commencing work.
1. Review zoning and make adjustments requested by the Owner.
2. Determine all timeclock settings such as ON and OFF times for each day of the week, holiday settings, latitude and longitude of the project site for astronomic features, etc.
3. Determine all control settings such as on and off triggers, blink warnings, sweep settings, switch programming, etc.
4. Determine all desired switch engraving.

PART 2 PRODUCTS
2.01 PROGRAMMABLE RELAY PANELS
A. Master Units: Lighting Control & Design GR2400 series with digital clock and modem unless indicated otherwise.
B. Slave Units: Lighting Control & Design GR2400 series unless indicated otherwise.
2.02 RELAYS
A. Normally closed latching rated at 20 amps at 120/277 volts unless indicated otherwise.
B. Provide lighting contactor controlled by relay in panel when load requires contacts rated greater than 20 amps.
2.03 LOW VOLTAGE WALL SWITCHES: Lighting Control & Design digital Chelsea switch with buttons as indicated or otherwise required.
2.04 PHOTOSENSORS
A. Outdoor: Lighting Control & Design #GR2400 PCC1 2WO photosensor with control card.
B. Indoor: Lighting Control & Design #PCELL 2WI with #PCC3 control card.
2.05 PROGRAMMING SOFTWARE: Lighting Control & Design Unity software.

PART 3 EXECUTION
3.01 GENERAL INSTALLATION REQUIREMENTS
A. Install relay panels, photosensors, and switches where indicated or otherwise required.
B. Provide all control wiring and communications cabling, whether or not shown on the Drawings, per manufacturer's recommendations and as required for a complete and operational system.
C. Program the entire system as established in meeting with the Owner and provide written report of program settings to the Owner.
D. Engrave all switch buttons as established in meeting with the Owner.
3.02 INSTALLATION OF OUTDOOR PHOTOSENSORS
A. Install photosensor facing north with unobstructed view.
B. Install such that photosensor does not face artificial light sources including light sources controlled by the photosensor itself.
C. Weatherproof all connections. Do not install photosensor with conduit stem facing up to prevent infiltration of water.
D. Adjust external sliding shields under optimum lighting conditions to achieve desired turn-on and turn-off activation.
3.03 INSTALLATION OF INDOOR PHOTOSENSORS
A. Location Adjustments: Locations indicated are diagrammatic and only intended to indicate which rooms or areas require devices. Provide quantity and locations as required for complete coverage of respective room or area based on manufacturer's recommendations for installed devices.
B. Install closed-loop photosensors to accurately measure the light level at the designated task location while minimizing the measured amount of direct light from natural or artificial sources.
C. Install open-loop photosensors to accurately measure the level of daylight coming into the space while minimizing the measured amount of lighting from artificial sources.
D. Calibrate dimming photosensors such that 100% artificial light output is provided only when completely dark outside and the controlled lighting dims commensurately with the amount of natural daylight contribution to the satisfaction of the Owner. Calibration shall occur after all room finishes, furniture, and window treatments have been installed.
3.04 CLOSEOUT
A. Demonstrate proper operation of system to the Owner and correct deficiencies or make adjustments as directed.
B. Train Owner's personnel on operation, adjustment, programming, and maintenance of the system.
C. Provide a written report of all program settings and photosensor settings to the Owner.
END OF SECTION

SECTION 260919 – CONTACTORS AND RELAYS

PART 1 GENERAL – NOT USED

PART 2 PRODUCTS
2.01 CONTACTORS
A. Description: Square D Class 8903, Type L or Type S unless indicated otherwise or otherwise required.
B. Contacts:
1. Provide with quantity of normally open and normally closed contacts as required and a minimum of two spare poles.
a. Provide multiple contactors connected in parallel with one another when the number of contacts required exceeds the maximum capability of a single contactor.
2. Coordinate contact rating to match branch circuit overcurrent protection, considering derating for continuous loads, but no less than 30 amps.
C. Coil: Coordinate with the voltage of the control circuit.
D. Enclosure: Manufacturer's standard enclosure suitable for the environment in which the contactor is installed.
2.02 RELAYS
A. Description: Square D Class 8501 Type C unless indicated otherwise or otherwise required.
B. Contacts: Form C contacts rated at 30 amperes unless indicated otherwise.
C. Coil: Coordinate with the voltage of the control circuit.
D. Enclosure: Manufacturer's standard enclosure suitable for the environment in which the relay is installed.

PART 3 EXECUTION
3.01 INSTALLATION
A. Install individual controls and relays in enclosures adjacent to panelboard serving controlled circuits and make electrical wiring interconnections.
B. Provide all relays, contactors, interposing relays, and controls that are required but may not be shown to switch the loads in the manner indicated on the Drawings.
C. Provide nameplate for contactors indicating contactor number.

SECTION 260923 – LIGHTING CONTROL DEVICES

PART 1 GENERAL
1.01 PREPARATION
A. Hold meeting with the Owner prior to commencing work.
1. Review zoning and make adjustments requested by the Owner.
2. Determine all timeclock settings such as ON and OFF times for each day of the week, holiday settings, latitude and longitude of the project site for astronomic features, etc.
3. Determine all control settings such as on and off triggers, blink warnings, sweep settings, switch programming, etc.

PART 2 PRODUCTS
2.01 ALL LIGHTING CONTROL DEVICES
A. Provide all required conduit, wiring, connectors, hardware, components, accessories, etc. as required for a complete operating system.
B. All sensors shall be suitable for the geometrical and environmental characteristics of the associated space and be suitable for the floor area to be covered. Provide multiple sensors when necessary to meet the required room coverage.
2.02 INDOOR OCCUPANCY SENSORS
A. Wall Switch:
1. Single-Relay: Wattstopper #DSW-301 unless indicated otherwise.
2. Dual-Relay: Wattstopper #DSW-302 unless indicated otherwise.
3. Finish: As selected by the Architect.
B. Wall-Mounted:
1. Sensor: Wattstopper #DT-200 unless indicated otherwise.
2. Power Pack: Wattstopper #BZ-150 unless indicated otherwise.
3. Finish: White.
C. Ceiling-Mounted:
1. Sensor: Wattstopper #DT-300 unless indicated otherwise.
2. Power Pack: Wattstopper #BZ-150 unless indicated otherwise.
3. Finish: White.
D. Accessories: Provide heavy duty coated steel wire protective guards compatible with specified occupancy sensors where subject to impact.
2.03 OUTDOOR MOTION SENSORS
A. Wall-Mounted for Switching:
1. Sensor: Wattstopper #EW-200 unless indicated otherwise.
2. Finish: As selected by the Architect.
B. Wall-Mounted for 0-10 Volt Dimming:
1. Sensor: Wattstopper #FSP-211 unless indicated otherwise.
2. Lens: Wattstopper #FSP-L* as required for the application.
3. Finish: White.
4. Configuration Tool: Wattstopper #FSIR-100 unless indicated otherwise.
2.04 TIMECLOCKS
A. Tork DZS series unless indicated otherwise.
B. Input Voltage: Coordinate with the voltage of the control circuit.
C. Enclosure: Manufacturer's standard enclosure suitable for the environment in which the timeclock is installed.
2.05 TIMER SWITCHES: Tork #SS403 unless indicated otherwise.
2.06 OUTDOOR PHOTOCELLS: Tork #2101 unless indicated otherwise.
2.07 INDOOR SWITCHING PHOTOSENSORS
A. Sensor: Wattstopper #LS-102 unless indicated otherwise.
B. Power Pack: Wattstopper #BZ-150 unless indicated otherwise.
C. Finish: White.
2.08 INDOOR 0-10 VOLT DIMMING PHOTOSENSORS
A. Sensor: Wattstopper #LS-301 unless indicated otherwise.
B. Power Pack: Wattstopper #BZ-150 unless indicated otherwise.
C. Finish: White.
D. Configuration Tool: Wattstopper #LSR-301-S unless indicated otherwise.
E. Remote Control: Wattstopper #LSR-301-P unless indicated otherwise.
2.09 DISTRIBUTED LIGHTING CONTROL SYSTEMS
A. Room Controllers:
1. Switching:
a. Single-Relay: Wattstopper #LMRC-101 unless indicated otherwise.
b. Dual-Relay: Wattstopper #LMRC-102 unless indicated otherwise.
2. 0-10 Volt Dimming:
a. Single-Relay: Wattstopper #LMRC-211 unless indicated otherwise.
b. Dual-Relay: Wattstopper #LMRC-212 unless indicated otherwise.
c. Three-Relay: Wattstopper #LMRC-213 unless indicated otherwise.
3. Forward Phase Dimming:
a. Single-Relay: Wattstopper #LMRC-221 unless indicated otherwise.
b. Dual-Relay: Wattstopper #LMRC-222 unless indicated otherwise.
B. Plug Load Controllers: Wattstopper #LMPL-101 unless indicated otherwise.
C. Occupancy Sensors:
1. 1-Button Wall Switch: Wattstopper #LMDW-101 unless indicated otherwise; color as selected by the Architect.
2. 2-Button Wall Switch: Wattstopper #LMDW-102 unless indicated otherwise; color as selected by the Architect.
3. Corner-Mount: Wattstopper #LMDX-100 unless indicated otherwise.
4. Ceiling-Mount: Wattstopper #LMDC-100 unless indicated otherwise.
D. Wall Switches:
1. Multi-Button: Wattstopper LMSW-100 series unless indicated otherwise with number of buttons as required for the application; color as selected by the Architect.
2. Dimming: Wattstopper #LMDM-101 unless indicated otherwise; color as selected by the Architect.
3. Scene Selection: Wattstopper #LMSW-105 unless indicated otherwise; color as selected by the Architect.
E. Dimming Photosensors:
1. For Sidelit Daylight Zones: Wattstopper #LMLS-400 unless indicated otherwise.
2. For Toplit Daylight Zones: Wattstopper #LMLS-500 unless indicated otherwise.
F. Accessories:
1. Cable: Wattstopper #LMRJ in lengths required unless indicated otherwise; plenum rated when not installed in conduit.
2. Wireless Configuration Tool: Wattstopper #LMCT-100 unless indicated otherwise.

PART 3 EXECUTION
3.01 GENERAL INSTALLATION REQUIREMENTS
A. Provide all control wiring and communications cabling, whether or not shown on the Drawings, per manufacturer's recommendations and as required for a complete and operational system.
B. Program the entire system as established in meeting with the Owner.
3.02 INSTALLATION OF TIMECLOCKS
A. Install timeclocks adjacent to panelboard serving controlled circuits and make electrical wiring interconnections.
B. Provide all relays, contactors, interposing relays, and controls that are required but may not be shown to switch the loads in the manner indicated on the Drawings.
C. Provide nameplate for timeclocks indicating timeclock number.
3.03 INSTALLATION OF OCCUPANCY SENSORS AND MOTION SENSORS
A. Location Adjustments: Locations indicated are diagrammatic and only intended to indicate which rooms or areas require devices. Provide quantity and locations as required for complete coverage of respective room or area based on manufacturer's recommendations for installed devices.
B. Install ultrasonic and dual technology occupancy sensors a minimum of 4 feet from air supply ducts or other sources of heavy air flow and as per manufacturer's recommendations, in order to minimize false triggers.
C. Program occupancy sensors as MANUAL-ON, AUTOMATIC-OFF unless indicated otherwise.
D. Mask sensor lenses using the manufacturer's masking material as required to prevent false triggers.
E. Adjust position of directional occupancy sensors and outdoor motion sensors to achieve optimal coverage as required.
3.04 INSTALLATION OF INDOOR PHOTOSENSORS
A. Location Adjustments: Locations indicated are diagrammatic and only intended to indicate which rooms or areas require devices. Provide quantity and locations as required for complete coverage of respective room or area based on manufacturer's recommendations for installed devices.
B. Install closed-loop photosensors to accurately measure the light level at the designated task location while minimizing the measured amount of direct light from natural or artificial sources.
C. Install open-loop photosensors to accurately measure the level of daylight coming into the space while minimizing the measured amount of lighting from artificial sources.
D. Calibrate dimming photosensors such that 100% artificial light output is provided only when completely dark outside and the controlled lighting dims commensurately with the amount of natural daylight contribution to the satisfaction of the Owner. Calibration shall occur after all room finishes, furniture, and window treatments have been installed.
3.05 INSTALLATION OF POWER PACKS
A. Install power packs on junction box in accessible location above ceiling at the associated sensor.
B. Do not switch power serving power packs. All required switching shall occur on the load side of the power pack relay.
3.06 INSTALLATION OF OUTDOOR PHOTOCELLS
A. Install photocell facing north with unobstructed view.
B. Install such that photocell does not face artificial light sources including light sources controlled by the photocell itself.
C. Weatherproof all connections. Do not install photocell with conduit stem facing up to prevent infiltration of water.
D. Adjust external sliding shields under optimum lighting conditions to achieve desired turn-on and turn-off activation.
3.07 INSTALLATION OF ROOM CONTROLLERS AND PLUG LOAD CONTROLLERS
A. Install controllers in concealed accessible locations above ceilings.
B. Do not switch power serving controllers. All required switching shall occur on the load side of the controller relay(s).

PAUL DHANENS • ARCHITECT

ARCHITECT

LICENSED ARCHITECT
PAUL DHANENS
NO. C-23843
RENEWAL
STATE OF CALIFORNIA

5100 CALIFORNIA AVE, SUITE 107
BAKERSFIELD, CALIFORNIA 93309
TELEPHONE: (661) 326-8936
FACSIMILE: (661) 326-8937

CONSULTANT

COPYRIGHT

PAUL DHANENS ARCHITECT expressly reserves its copyright and other property rights in these documents which are not to be reproduced, changed or copied in any written, graphic or electronic form, nor assigned to any third party without the expressed written consent of PAUL DHANENS ARCHITECT.

NOTICE TO CONTRACTORS
Written dimensions on these drawings shall take precedence over scaled dimensions. Contractor shall verify and be responsible for confirming all dimensions and shall notify the architect immediately of any descripencies or field variations discovered.

PROJECT

TENANT IMPROVEMENT FOR

Steak 'n Shake – FAMOUS FOR STEAKBURGERS

1966 WEST AVE L
LANCASTER, CA

DATE	ISSUED FOR
9-24-18	BUILDING DEPT SUBMITTAL
6-26-19	

NO.	REVISIONS
1	
2	
3	
4	

ELECTRICAL

FILE NAME: 2366A2-0

SHEET

E-601

S:\DHANENS\steak and shake\S&S MEP.dwg, 6/26/2019 2:36:48 PM, DWG To PDF.pc3

C. Provide nameplate for each controller indicating room(s) controlled.
D. Install room controller wall-mounted switches 46 inches above finished floor to the centerline of the box unless indicated otherwise.

3.08 CLOSEOUT
A. Demonstrate proper operation of lighting control devices to the Owner and correct deficiencies or make adjustments as directed.
B. Train Owner's personnel on operation, adjustment, programming, and maintenance of lighting control devices.
C. Provide a written report of all program settings and photosensor settings to the Owner.

END OF SECTION

SECTION 262416 – PANELBOARDS

PART 1 GENERAL – NOT USED

PART 2 PRODUCTS
2.01 LIGHTING AND APPLIANCE PANELBOARDS
A. Description: Square D Type NQ for 240 Volt Class and Square D Type NF for 600 Volt Class unless indicated otherwise.
B. Voltage, Phase, and Current Ratings: As indicated or otherwise required.
C. Short-Circuit Current Rating (SCCR): No less than the available fault current. The Contractor shall determine the available fault current where not indicated on the Drawings.
D. Bussing: As indicated.
E. Bonded Equipment Ground Bar: Provide for each panelboard.
F. Isolated Ground Bar: Provide for each panelboard that serves isolated ground loads.
G. Enclosure: Manufacturer's standard enclosure suitable for the environment in which the panelboard is installed; 5.75 inches deep, 20 inches wide unless indicated otherwise; surface or flush mounted as indicated.
H. Cabinet Front: Surface or flush type as indicated with hinged door, flush lock, metal directory frame and finished in manufacturer's standard enamel.
I. Circuit Breakers:
1. Bolt-on thermal-magnetic molded case circuit breakers with common trip handle for all poles.
a. Provide Type SWD for lighting circuits.
b. Provide Type HACR for heating, air-conditioning, and refrigeration equipment circuits.
c. Provide Class A ground-fault circuit interrupter (GFCI) where indicated or otherwise required.
d. Provide ground-fault protection of equipment (GFPE) where serving heat tracing or otherwise required.
e. Provide combination type arc-fault circuit interrupter (AFCI) where indicated or otherwise required.
f. Provide dual-rated combination type arc-fault circuit interrupter (AFCI) and Class A ground-fault circuit interrupter (GFCI) where indicated or otherwise required.
2. Accessories:
a. Provide handle ties for circuit breakers serving multiwire branch circuits.
b. Provide Square D #HLO1 handle clamps for circuit breakers denoted as "HLO" and for all fire protection and fire alarm equipment and all circuits serving emergency lighting.
c. Provide Square D #QO*PAF fixed handle padlock attachment for circuit breakers denoted as "HPL" and for appliances without a local disconnecting means.
d. Provide shunt trip were denoted as "ST" or otherwise required.
3. Amp Interrupting Current (AIC) Rating: No less than the available fault current; fully rated or manufacturer tested series combination. The Contractor shall determine the available fault current where not indicated on the Drawings.
4. Do not use multi-pole circuit breakers that mount in a 1-pole circuit breaker space (i.e. half-size circuit breakers).

PART 3 EXECUTION
3.01 INSTALLATION
A. Install panelboards 6 feet to top of panelboard but no less than 4 inches above floor.
B. Provide 4 inch thick concrete housekeeping pad for surface-mounted panelboards installed within 4 inches of the floor.
C. Provide filler plates for unused spaces in panelboards.
D. Provide typed circuit directory and nameplate for each panelboard. Revise directory to reflect circuiting changes required to balance phase loads.
E. Provide five 1 inch spare conduits out of each flush-mounted panelboard to an accessible location above ceiling. Identify each as SPARE.
F. Measure steady state load currents at each panelboard feeder and rearrange circuits as required to balance the phase loads to within 10 percent maximum imbalance. Maintain proper phasing for multiwire branch circuits.
G. Provide nameplate indicating panelboard equipment designation for each panelboard.
3.02 ADDITIONAL INSTALLATION REQUIREMENTS FOR REMOTE CONTROLLED CIRCUIT BREAKER PANELBOARDS
A. Hold meeting with the Owner.
1. Review zoning and make adjustments requested by the Owner.
2. Determine all timeclock settings such as ON and OFF times for each day of the week, holiday settings, latitude and longitude of the project site for astronomic features, etc.
3. Determine all control settings such as on and off triggers, blink warnings, sweep settings, etc.
B. Provide all control wiring and communications cabling, whether or not shown on the Drawings, per manufacturer's recommendations and as required for a complete and operational system.
C. Program the entire system as established in meeting with the Owner.
D. Demonstrate proper operation of remote controlled circuit breaker panelboard control system to the Owner and correct deficiencies or make adjustments as directed.
E. Train Owner's personnel on operation, adjustment, programming, and maintenance of remote controlled circuit breaker panelboard control system.
F. Provide a written report of all remote controlled circuit breaker panelboard control system program settings to the Owner.

END OF SECTION

SECTION 262701 – ELECTRICAL SERVICE ENTRANCE

PART 1 GENERAL
1.01 PRE-INSTALLATION MEETING: Convene with utility company one month prior to commencing work to review and coordinate all requirements and details.

PART 2 PRODUCTS
2.01 INSTRUMENT TRANSFORMER CABINET: Sheet metal cabinet with hinged door, provisions for locking and sealing, and conforming to all utility company requirements; size as required by utility company.
2.02 METER SOCKET: Furnished by utility company or the Electrical Contractor as specified by the utility company.
2.03 UTILITY TRANSFORMER PAD: Prefabricated precast concrete or cast-in-place transformer pad sized as required by the utility company. Construct in strict conformance with the utility company standards.
2.04 OTHER COMPONENTS: Provide all conduits, boxes, accessories, and components as required by utility company for a complete, functional, and safe installation.

PART 3 EXECUTION
3.01 PREPARATION
A. Arrange with utility company to obtain permanent electric service.
3.02 INSTALLATION
A. Install weatherhead, transformer pad, instrument transformer cabinets, and meter socket as required by utility company.
B. Comply with all utility company metering, installation, and service requirements; utility company requirements supersede any requirements indicated on the Drawings or within the Specifications.

END OF SECTION

SECTION 262717 – EQUIPMENT WIRING

PART 1 GENERAL
1.01 COORDINATION WITH OTHER TRADES
A. Meet with all other trades before commencing any work and obtain and review shop drawings, product data, manufacturer's wiring diagrams, and manufacturer's instructions for equipment furnished under other Sections.
1. Determine all equipment connection locations and requirements and verify that proper power supply is available prior to subcontractor's ordering equipment.
2. Sequence rough-in of electrical connections to coordinate with installation of equipment.
3. Sequence electrical connections to coordinate with start-up of equipment.
B. Verify and coordinate all requirements and installation details of all materials and equipment prior to rough-in.
C. Verify proper voltage, phase, and current rating of power supply and immediately report any discrepancies.
D. Responsibility for verification of proper power supply voltage and any damage resulting from incorrect connections shall rest with this Contractor.
E. Any conflicts arising from lack of coordination shall be this Contractor's responsibility.

PART 2 PRODUCTS
2.01 CORDS
A. Description: Multi-conductor flexible cord Type SO for dry and damp locations or Type SOW in wet locations.
B. Conductor Quantity: As required for the load served; include identified equipment grounding conductor.
C. Conductor Insulation Rating: As required for the voltage of the load served.
D. Conductor Ampacity: No less than the rating of the overcurrent protection device protecting the circuit.
2.02 CORD CAPS: Match cord cap to receptacle configuration at outlet provided for equipment.
2.03 OTHER MATERIALS: Provide all disconnect switches, wiring devices, conduit, wire and cable, and boxes required.

PART 3 EXECUTION
3.01 ELECTRICAL CONNECTIONS
A. Make electrical connections in accordance with equipment manufacturer's instructions.
B. Make conduit connections to equipment using flexible conduit. Use liquidtight flexible conduit with watertight connectors in damp or wet locations.
C. Connect heat producing equipment using wire and cable with insulation suitable for temperatures encountered.
D. Provide receptacle outlet to accommodate connection with attachment plug.
E. Provide cord and cap where field-supplied attachment plug is required.
F. Install suitable strain-relief clamps and fittings for cord connections at outlet boxes and equipment connection boxes.
G. Install disconnect switches, controllers, control stations, and control devices to complete equipment wiring requirements.
H. Install terminal block jumpers to complete equipment wiring requirements.
I. Install interconnecting conduit and wiring between devices and equipment to complete equipment wiring requirements.
J. Cut and seal conduit openings in freezer and cooler walls, floors, and ceilings where applicable.

END OF SECTION

SECTION 262726 – WIRING DEVICES

PART 1 GENERAL
1.01 PREPARATION: Contact the Architect to determine colors of all wiring devices, cover plates, and carpet and tile flanges, locations where stainless steel cover plates are required, and locations where carpet and tile flanges are required.

PART 2 PRODUCTS
2.01 RECEPTACLES
A. All Receptacles:
1. Color as selected by Architect.
2. Provide tamper-resistant receptacles where denoted "TR" on the Drawings and otherwise required.
3. Provide ground-fault circuit interrupter receptacles where denoted "GFCI" on the Drawings and otherwise required.
4. Provide receptacles with controlled receptacle marking where denoted "CR" on the Drawings and where controlled by automatic shutoff controls.
5. Provide identified weather-resistant receptacles for receptacles installed outdoors.
6. NEMA 5-15R unless indicated otherwise.
B. Standard NEMA 5-15R Duplex: Hubbell #5262 unless indicated otherwise.
C. Standard NEMA 5-20R Duplex: Hubbell #5362 unless indicated otherwise.
D. Interior GFCI Duplex: Hubbell #GF20 unless indicated otherwise.
E. Exterior GFCI Duplex: Hubbell #GFTR20 unless indicated otherwise.
F. Isolated Ground Duplex: Hubbell #CR5352 unless indicated otherwise.
G. Surge Protection Receptacles: Hubbell #HBL5362SA unless indicated otherwise.
H. Clock Hanger Receptacles: Hubbell #HBL5235 unless indicated otherwise.
I. Other NEMA Configurations: As required by the load served.
2.02 FACELESS GFCI: Hubbell #GFBF20; color as selected by Architect.
2.03 MULTI-OUTLET ASSEMBLY: Wiremold Plugmold 2000 Series with receptacles at 6 inches on center unless indicated otherwise. Provide all fittings required for a complete installation. Coordinate device and channel finish color with the Architect.
2.04 WALL SWITCHES
A. All Switches:
1. Color as selected by Architect.
2. Horsepower rated when used as motor disconnecting means.
B. Single Pole Toggle: Hubbell #1221 unless indicated otherwise.
C. Three-Way Toggle: Hubbell #1223 unless indicated otherwise.
D. Four-Way Toggle: Hubbell #1224 unless indicated otherwise.
E. Single Pole Toggle with Pilot Light: Hubbell #HBL1221PLC unless indicated otherwise.
F. Single Pole Keyed: Hubbell #HBL1221 unless indicated otherwise.
G. Three-Way Keyed: Hubbell #HBL1223 unless indicated otherwise.
H. Four-Way Keyed: Hubbell #HBL1224 unless indicated otherwise.
2.05 WALLBOX DIMMERS
A. All Wallbox Dimmers: Color as selected by Architect.
B. Incandescent Dimmers:
1. Up to 600 Watts: Lutron Maestro #MA-600 unless indicated otherwise.
2. Between 600 and 1000 Watts: Lutron Maestro #MA-1000 unless indicated otherwise.
3. Between 1000 and 1920 Watts: Lutron Maestro #MAF-6AM with Lutron #PHPM-WBX-120-WH power interface unless indicated otherwise.
C. Fluorescent 3-Wire Dimmers:
1. 120 Volts, Up to 6 Amps: Lutron Maestro #MAF-6AM unless indicated otherwise.
2. 120 Volts, Between 6 and 16 Amps: Lutron Maestro #MAF-6AM with Lutron #PHPM-WBX-120-WH power interface unless indicated otherwise.
3. 277 Volts, Up to 6 Amps: Lutron Maestro #MAF-6AM-277 unless indicated otherwise.
4. 277 Volts, Between 6 and 16 Amps: Lutron Maestro #MAF-6AM with Lutron #PHPM-WBX-DV-WH power interface unless indicated otherwise.
D. Fluorescent 0-10 Volt Dimmers:
1. Up to 16 Amps: Lutron Maestro #MAF-6AM with Lutron #GRX-TVI power interface unless indicated otherwise.
E. Magnetic Low Voltage Dimmers:
1. Up to 450 Watts: Lutron Maestro #MALV-600 unless indicated otherwise.
2. Between 450 and 800 Watts: Lutron Maestro #MALV-1000 unless indicated otherwise.
3. Between 800 and 1920 Watts: Lutron Maestro #MAF-6AM with Lutron #PHPM-WBX-DV-WH power interface unless indicated otherwise.
F. Electronic Low Voltage Dimmers:
1. Up to 600 Watts: Lutron Maestro #MAELV-600 unless indicated otherwise.
2. Between 600 and 1920 Watts: Lutron Maestro #MAF-6AM with Lutron #PHPM-WBX-DV-WH power interface unless indicated otherwise.
G. LED Dimmers:
1. All LED Dimmers: Dimmer utilized shall be tested and listed by the LED manufacturer as a compatible dimmer.
2. 0-10 Volt Dimmers:
a. Up to 16 Amps: Lutron Maestro #MAF-6AM with Lutron #GRX-TVI power interface unless indicated otherwise.
3. Electronic Low Voltage Dimmers:
a. Up to 1920 Watts: Lutron Maestro #MAF-6AM with Lutron #PHPM-WBX-DV-WH power interface unless indicated otherwise.
4. Magnetic Low Voltage Dimmers
a. Up to 1920 Watts: Lutron Maestro #MAF-6AM with Lutron #PHPM-WBX-DV-WH power interface unless indicated otherwise.
2.06 ABOVE-FLOOR SERVICE FITTINGS: Hubbell #SC3098A housing with plates as required for the wiring device installed within unless indicated otherwise.
2.07 POKE-THROUGH FITTINGS: Wiremold Evolution 6AT series unless indicated otherwise with wiring devices indicated; color as selected by Architect.
2.08 POWERPOLES: Wiremold AMDTP series unless indicated otherwise with wiring devices indicated. Provide lengths, device covers, ceiling trim plates, and mounting foot as required for a complete installation.
2.09 COVER PLATES
A. All Cover Plates:
1. Color and material as selected by Architect.
2. Provide cover plates appropriate for the wiring devices installed within the box.
a. Use combination plates when wiring devices are ganged together.
B. Wall Plates:
1. Provide standard-size nylon wall plates unless indicated otherwise; mid-size or jumbo wall plates are not permitted.
2. Provide stainless steel coverplates where requested by the Architect.
3. Provide galvanized steel cover plates on outlet boxes and junction boxes located in unfinished areas, above accessible ceilings, and on surface mounted outlets.
4. Provide gasketed, cast metal, hinged cover plates for all exterior locations, where denoted "WP" on the Drawings, and where otherwise required.
5. Provide weatherproof while-in-use covers for all receptacles installed in wet locations.
C. Floor Box Cover Plates:
1. Flush Floor Boxes:
a. Carpet and Tile Flanges: Wiremold Omnibox Series with number of gangs as required for the floor box.
b. Receptacle Cover Plates: Wiremold Omnibox Series with flip lids unless indicated otherwise.
c. Communications Cover Plates: Wiremold Omnibox Series combination concentric threaded plug with 1-inch inner plug unless indicated otherwise.
d. Hardwired Connection Cover Plates: Wiremold Omnibox Series combination concentric threaded plug with 3/4-inch inner plug unless indicated otherwise.
2. Recessed Floor Boxes:
a. Internal Brackets: As required for the wiring devices installed within.
b. Cover Assemblies: Cutout cover type to accommodate carpet or tile insert; flanged or flangeless as selected by the Architect.
3. Wood Floor Boxes:
a. Carpet and Tile Flanges: Wiremold 880W Series with number of gangs as required for the floor box.
b. Receptacle Cover Plates: Wiremold 880W Series with flip lids unless indicated otherwise.
c. Communications Cover Plates: Wiremold 880W Series combination concentric threaded plug with 1-inch inner plug unless indicated otherwise.
d. Hardwired Connection Cover Plates: Wiremold 880W Series combination concentric threaded plug with 3/4-inch inner plug unless indicated otherwise.

PART 3 EXECUTION
3.01 EXAMINATION: Verify that outlet boxes are installed at proper heights and that openings are neatly cut and will be completely covered by the coverplates or flanges.
3.02 PREPARATION
A. Provide extension rings to bring wall-mounted outlet boxes flush with finished surface.
B. Adjust floor boxes to bring floor boxes flush with finished floor.
3.03 MOUNTING HEIGHTS
A. General: All mounting heights are to the centerline of the outlet box.
B. Receptacles:
1. Install receptacles at 18 inches above finished floor unless indicated otherwise.
2. Install receptacles at countertops at the lesser of 44 inches above finished floor or 3 inches above any sidesplashes or backsplashes unless indicated otherwise.
C. Wall Switches: Install wall switches including wallbox dimmers, wall switch occupancy sensors, and low voltage switches associated with programmable relay panels and room controllers at 46 inches above finished floor unless indicated otherwise.
D. Telecommunications Outlets:
1. Install telecommunications outlets including telephone, data, and television outlets 18 inches above finished floor unless indicated otherwise.
2. Install telephone outlets for side-reach and forward-reach wall telephone 46 inches maximum above finished floor unless indicated otherwise.
E. Modify mounting heights in masonry walls as required to locate the outlet box at the joint in the masonry unit to avoid multiple or split-cut masonry units.
3.04 INSTALLATION
A. Install wall switches with OFF position down.
B. Install receptacles vertically with ground pin on bottom unless indicated otherwise.
C. Ground-Fault Circuit Interrupter (GFCI) Receptacles:
1. Provide a separate GFCI receptacle for every instance where denoted "GFCI" on the Drawings and otherwise required by Code; do not GFCI-protect receptacles from the load side of an upstream GFCI receptacle.
2. Install all GFCI receptacles in in a readily accessible location.
a. Provide faceless GFCI device in a readily accessible location when the receptacle will not be readily accessible and connect receptacle to load side of faceless GFCI.
D. Wallbox Dimmers:
1. Install wallbox dimmers to achieve full rating; do not break heatsink fins off.
2. Install power interfaces in concealed accessible location.
3. Provide a separate neutral conductor for each branch circuit serving wallbox dimmers; do not connect wallbox dimmers to multiwire branch circuits.
4. Provide all control wiring and communications cabling including all 0-10V control wiring, whether or not shown on the Drawings, per manufacturer's recommendations and as required for a complete and operational system.
E. Install wiring devices in outlet boxes and connect wiring device grounding terminal to branch circuit equipment grounding conductor.
F. Connect wiring devices by wrapping conductor around screw terminal; do not use back-wired push-in terminals.
G. Install cover plates on all outlet boxes including blank outlets.
H. Use flat-head screws, clips, and straps to fasten multi-outlet assembly channel to surfaces and use suitable insulating bushings and inserts at connections to outlets and corner fittings.

END OF SECTION

SECTION 262813 – FUSES

PART 1 GENERAL – NOT USED

PART 2 PRODUCTS
2.01 FUSES:
A. Up to 600 Amps: Dual-element time-delay Class RK1 unless indicated otherwise or otherwise required for the switch in which the fuse is installed.
B. Greater than 600 Amps: Dual-element time-delay Class L unless indicated otherwise indicated otherwise or otherwise required for the switch in which the fuse is installed.
C. Site Lighting: Class CC with in-line fuseholder.

PART 3 EXECUTION
3.01 INSTALLATION
A. Install fuses with label oriented such that manufacturer, type, and size are easily read.

END OF SECTION

SECTION 262818 – ENCLOSED SWITCHES

PART 1 GENERAL – NOT USED

PART 2 PRODUCTS
2.01 SAFETY SWITCHES
A. 240 Volt Class: Square D Class 3130 general duty unless indicated otherwise.
B. 600 Volt Class: Square D Class 3110 heavy duty unless indicated otherwise.
C. Voltage, Phase, and Current Ratings: As indicated or otherwise required.
D. Fuse Clips: Class R cartridge fuse clips where fuses are installed.
E. Enclosure: Manufacturer's standard enclosure suitable for the environment in which the switch is installed.
F. Accessories: Provide grounding kit for all enclosed switches.
2.02 BOX COVER UNITS: Bussmann #SSU unless indicated otherwise.
2.03 ENCLOSED SWITCHES SERVING ELEVATOR CONTROLLERS
A. Provide Bussmann Power Module Switch for each elevator controller unless indicated otherwise with the following:
1. Voltage rating, amp rating, and number of poles as required for the elevator.
2. 120 volt shunt trip.
3. Control power terminal block.
4. Ground lug.
5. Class J fuseholders.
6. Control power transformer with fused primary and 120 volt fused secondary.
7. Three-pole double-throw (3PDT) 10 amp, 120 volt fire safety interface relay with 120 volt coil.
8. Green pilot light to indicate ON.
9. Two normally open mechanically interlocked auxiliary contacts.
10. Two normally closed mechanically interlocked auxiliary contacts.
11. Single-pole fire alarm voltage monitoring relay to monitor shunt trip voltage.
12. Manufacturer's standard enclosure suitable for the environment in which the switch is installed.

PART 3 EXECUTION
3.01 INSTALLATION
A. All Enclosed Switches:
1. Install in locations that provide all working space required by NFPA 70.
2. Install 5 feet to the operating handle.
3. Install fuses in fusible disconnect switches.
4. Provide nameplate indicating equipment designation, NEMA fuse class, and fuse size installed.
B. Enclosed Switches Serving Elevator Controllers:
1. Coordinate all requirements with the elevator manufacturer prior to ordering and rough-in.
2. Install within 24 inches of the latch (strike) side of the door to the machine room regardless of location show on the Drawings.
3. Coordinate all fuse ratings with the elevator manufacturer.
4. Connect auxiliary contacts to battery lowering accessory per elevator manufacturer's recommendations.
5. Wire the auxiliary contacts per the manufacturer's recommendations to prevent signaling the fire alarm system when the switch is manually opened.
6. Coordinate connection of auxiliary contacts and fire safety interface to the fire alarm system with the contractor installing the fire alarm system.

END OF SECTION

SECTION 262913 – ENCLOSED CONTROLLERS

PART 1 GENERAL
1.01 COORDINATION WITH OTHER TRADES
A. Examine the Drawings of all trades and identify all motors that will require motor controllers.
B. Coordinate with all trades and provide all required controllers whether or not specifically shown on the Drawings.
C. Verify voltage, phase, and motor horsepower with the Contractor providing the motor.
D. Coordinate control circuit voltages the all trades.

PART 2 PRODUCTS
2.01 FRACTIONAL HORSEPOWER MANUAL CONTROLLERS: Square D Class 2510 Type F with red pilot light and manufacturer's standard enclosure suitable for the environment in which the controller is installed unless indicated otherwise.
2.02 AUTOMATIC CONTROLLERS
A. All Automatic Controllers: All automatic controllers shall return to their previous operating mode upon restoration of power following a power failure.
B. Full-Voltage Non-Reversing Controllers:
1. Description: Square D Class 8536 Type S unless indicated otherwise or otherwise required.
2. Voltage, Phase, and Horsepower Rating: As required for the controlled motor.
3. Control Coil: Coordinate with the voltage of the control circuit.
4. Overload Relay: Ambient compensated bimetallic with heaters sized per NFPA 70 requirements based on motor nameplate full-load amps (FLA).
5. Control Power Transformer: Standard capacity with secondary voltage as required for the control circuit, fused primary, and fused secondary.
6. Auxiliary Contacts: Two field-convertible.
7. Operators: Cover-mounted shrouded START-STOP pushbuttons with HAND-OFF-AUTO selector switch.
8. Pilot Lights: Cover-mounted red ON and Green OFF.
9. Enclosure: Manufacturer's standard enclosure suitable for the environment in which the controller is installed.
C. Full-Voltage Non-Reversing Combination Controllers:
1. Description: Square D Class 8538 Type S unless indicated otherwise or otherwise required.
2. Voltage, Phase, and Horsepower Rating: As required for the controlled motor.
3. Fuse Clips: Class R where indicated as fusible.
4. Control Coil: Coordinate with the voltage of the control circuit.
5. Overload Relay: Ambient compensated bimetallic with heaters sized per NFPA 70 requirements based on motor nameplate full-load amps (FLA).
6. Control Power Transformer: Standard capacity with secondary voltage as required for the control circuit, fused primary, and fused secondary.
7. Auxiliary Contacts: Two field-convertible.
8. Operators: Cover-mounted shrouded START-STOP pushbuttons with HAND-OFF-AUTO selector switch.
9. Pilot Lights: Cover-mounted red ON and Green OFF.
10. Enclosure: Manufacturer's standard enclosure suitable for the environment in which the controller is installed.
D. Two-Speed Controllers: Two-speed controllers where indicated or required by connected equipment; include integral time delay transition between FAST and SLOW speeds.

PART 3 EXECUTION
3.01 INSTALLATION
A. Install stand-alone magnetic starters directly adjacent to the panelboard or switchboard serving the starter.
B. Install at 5 feet to operating handle or as required by field conditions.
D. Install fuses in fusible combination controllers.
E. Install overload heater elements in motor controllers to match installed motor characteristics.
F. Provide nameplate indicating equipment designation, NEMA fuse class, and fuse size installed.
G. Provide typed label in clear plastic holder within each motor controller door identifying the motor served, nameplate horsepower, full load amps, code letter, service factor, and voltage/phase rating.

END OF SECTION

SECTION 265100 – INTERIOR LIGHTING

PART 1 GENERAL
1.01 QUALITY ASSURANCE
A. Verify all ceiling systems for proper coordination of luminaires and accessories including any drywall frames, bar hangers, flanges, trim rings, etc. required for a complete, finished installation.
B. Provide only luminaires that are listed for the environment in which they are installed.
1. Luminaires shall carry damp location and/or wet location ratings as required.
2. Luminaires shall be insulated ceiling (IC) rated when recessed into insulated ceilings; coordinate locations of all insulated ceilings with the Architectural plans.
C. Coordinate exact locations of all luminaires with the Architectural Reflected Ceiling Plan(s); luminaire locations on the Architectural Reflected Ceiling Plan(s) take precedence over locations indicated on the electrical lighting plans.
D. Coordinate mounting heights of all wall-mounted luminaires with the Architect prior to rough-in.
E. Confirm all luminaire and accessory finishes with the Architect prior to ordering.
F. Coordinate luminaire dimensions with the wall and/or ceiling thickness prior to ordering.
G. Coordinate mounting location, number of faces, and directional arrows of exit signs as required to mark paths of egress to the satisfaction of the Authority Having Jurisdiction.

PART 2 PRODUCTS
2.01 LUMINAIRES
A. Provide as indicated on the Drawings.
B. The acceptability of any substitute fixtures lies solely with the Architect and Engineer.
C. The specified luminaire shall be provided at no additional cost where a substitute fixture is not accepted by the Architect or Engineer.
2.02 NON-DIMMING BALLASTS, TRANSFORMERS, AND DRIVERS
A. All Ballasts, Transformers, and Drivers
1. Provide low-temperature ballasts when installed in locations where ambient temperature can fall below 10 degrees C (50 degrees F).
B. Electronic Linear Fluorescent Ballasts:
1. Description: Osram Sylvania Quicktronic High Efficiency series unless indicated otherwise.
2. Voltage: Universal (120 through 277 volts).
3. Ballast Factor: Normal (0.88).
4. Total Harmonic Distortion: Less than 10 percent.
5. Sound Level Rating: Class A.
6. Starting: Programmed rapid start unless indicated otherwise.
7. Accessories: Provide disconnecting means that opens all supply conductors including the neutral conductor.
C. Electronic Compact Fluorescent Ballasts:
1. Description: Osram Sylvania Quicktronic Professional DULUX series unless indicated otherwise.
2. Voltage: Universal (120 through 277 volts).
3. Ballast Factor: Greater than 0.95.
4. Total Harmonic Distortion: Less than 10 percent.
5. Sound Level Rating: Class A.
6. Starting: Programmed rapid start unless indicated otherwise.
D. Electronic Metal Halide Ballasts:
1. Provide all metal halide luminaires rated at 100 watts or less with electronic ballast with matched ANSI code to the associated lamp.
2. Description: Osram Sylvania Quicktronic Metal Halide Professional series unless indicated otherwise.
3. Voltage: Universal (120 through 277 volts).
4. Ballast Factor: 1.0.
5. Power Factor: Greater than 0.98.
6. Total Harmonic Distortion: Less than 10 percent.
7. Sound Level Rating: Class A.
E. Magnetic Metal Halide Ballasts:
1. Permitted only for metal halide luminaires rated greater than 100 watts.
2. Description: Osram Sylvania Metalarc series unless indicated otherwise with matched ANSI code to the associated lamp.
3. Voltage: Multi-tap (120, 208, 240, 277, and 480 volts).
4. Circuit Type: Constant Wattage Autotransformer (CWA)
5. Power Factor: Greater than 0.90.
F. Low Voltage Transformers:
1. Description: Electronic or magnetic low voltage transformer as required for and compatible with the associated luminaires.
2. Primary Voltage: Coordinate with the circuit(s) serving the luminaires.
3. Secondary Voltage: As required for the associated luminaires.
4. Power Rating: As required for the total wattage of the luminaires served plus a minimum of 25 percent.
G. LED Drivers: As required for and compatible with the associated LED module.
2.03 DIMMING BALLASTS AND DRIVERS
A. All Dimming Ballasts and Drivers:
1. Provide appropriate dimming ballasts/drivers in all fluorescent and LED luminaires controlled by wallbox dimmer switches or dimming systems whether or not specifically indicated within the specified luminaire's catalog number.
2. All dimming ballasts/drivers shall be compatible with associated wallbox dimmer switches or centralized dimming system control units.
3. Dimming Range: 100 percent to 5 percent.
4. Voltage: Universal (120 through 277 volts).
5. Power Factor: Greater than 0.95.
6. Total Harmonic Distortion: Less than 10 percent.
7. Sound Level Rating: Class A.
B. Fluorescent Dimming Ballasts:
1. Three-Wire Linear Fluorescent: Lutron Hi-Lume 3D unless indicated otherwise; 1.0 ballast factor.
2. Three-Wire Compact Fluorescent: Lutron EcoSystem series unless indicated otherwise; ballast factor greater than or equal to 0.95.
3. 0-10 Volt: Advance Mark 7 series unless indicated otherwise; ballast factor greater than or equal to 0.95.
C. LED Dimming Drivers: Advance Xitanium series unless indicated otherwise.
2.04 EMERGENCY POWER SUPPLIES
A. All Emergency Power Supplies:
1. Provide appropriate emergency battery in all fluorescent and LED luminaires indicated as emergency fixtures whether or not specifically indicated within the specified luminaire's catalog number.
2. Battery: Sealed nickel calcium (NiCad) with 10-year life expectancy.
3. Illumination Time: 90 minutes minimum.
4. Voltage: Universal (120 through 277 volts).
5. Test Switch: Two-wire with remote LED.
B. Linear Fluorescent Emergency Batteries: Bodine #B50 unless indicated otherwise; wired for two-lamp operation for luminaires with more than one lamp.
C. Compact Fluorescent Emergency Batteries: Bodine #BFCF2P unless indicated otherwise; wired for two-lamp operation for luminaires with more than one lamp.
D. LED Emergency Batteries: Bodine BSL series unless indicated otherwise.
2.05 LAMPS
A. All Lamps:
1. Provide all incandescent lamps from the same manufacturer.
2. Provide all fluorescent lamps from the same manufacturer.
3. Provide all metal halide lamps from the same manufacturer.
B. Incandescent: As indicated on the Drawings.
C. Linear T8 Fluorescent: Osram Sylvania OCTRON series extended life Ecologic lamps unless indicated otherwise.
D. Linear T5 Fluorescent: Osram Sylvania PENTRON series extended life Ecologic lamps unless indicated otherwise.
E. Compact Fluorescent: Osram Sylvania DULUX series Ecologic lamps unless indicated otherwise.
F. Metal Halide: As required for the specified luminaire with matched ANSI code to the associated ballast.
G. LED: As indicated on the Drawings.
2.06 ACCESSORIES
A. Provide all supplementary items, appurtenances, and devices incidental to or necessary for a sound, secure, and complete installation including, but not limited to:
1. Dimming ballasts for fluorescent and LED luminaires that are served by wallbox dimmer switches or dimming systems.
2. Emergency power supplies for fluorescent and LED luminaires indicated as emergency fixtures.
3. Multiple ballasts for fluorescent luminaires where indicated to have multi-level switching.
4. All trim rings, extensions, stems, canopies, cords, pendant feeds, connectors, bar hangers, fittings, hold-down clips, alignment clips/joiners, etc. necessary to mount the luminaires in a proper and approved method.
5. All necessary low-voltage transformers, connectors, mounting hardware, etc. for a complete low-voltage lighting system.
6. All necessary connectors, feeds, end caps, pendants, mounting hardware, fittings, etc. for a complete track lighting system.
7. Chain hangers for all suspended luminaires in unfinished areas.
8. Drywall frames for all linear fluorescent luminaires that are recessed into drywall ceilings.
9. Wireguards for any wall-mounted luminaires, including emergency lighting unit equipment and exit signs, located in gymnasiums or where otherwise exposed to physical damage.
10. Fire-rated luminaire covers (tents) for luminaires installed in fire-rated ceiling assemblies; coordinate locations of fire-rated ceiling assemblies with the Architectural plans.
11. Any seismic bracing and/or restraints required by the Authority Having Jurisdiction.
12. Provide Bodine #GTD20A lighting relay control device for each circuit serving luminaires that are used for both normal and emergency lighting where a generator or central lighting inverter is used for emergency power and the luminaires are controlled by local switching, contactors, or relays.

PART 3 EXECUTION
3.01 INSTALLATION
A. Install luminaires in locations shown on the Architectural Reflected Ceiling Plan(s); luminaire locations on the Architectural Reflected Ceiling Plan(s) take precedence over locations indicated on the electrical lighting plans.
B. Install luminaires plumb and level and align with building lines and adjacent luminaires.
C. Support all luminaires completely independent of any suspended ceiling systems.
D. Connect luminaires to branch circuit.
1. Circuit all exit signs, emergency lights, and nightlights ahead of any switching.
2. Do not use multiwire branch circuits for circuits serving emergency lighting equipment such as emergency batteries or emergency lighting unit equipment.
E. Provide all additional emergency lighting and/or exit signs determined necessary by the Authority Having Jurisdiction during inspections.
F. Install all remote ballasts, low voltage transformers, and drivers in concealed accessible areas in close proximity to the associated luminaires and connect to the associated luminaires per the manufacturer's recommendations, including adjusting wire sizes for voltage drop if required.
G. Prevent insulation from being installed above or within 3 inches away from any luminaire that is recessed into an insulated ceiling but is not insulated ceiling (IC) rated.
H. Install fire-rated luminaire covers (tents) for luminaires installed in fire-rated ceiling assemblies; provide fire-rated boxes around luminaires when fire-rated luminaire covers (tents) are not available.
I. Burn-in all fluorescent lamps controlled by wallbox dimmers or dimming systems for a minimum of 100 hours prior to connecting to dimmer.
3.02 CLOSEOUT
A. Replace any lamps and ballasts that expire before the Owner's acceptance of the project.
B. Aim and adjust all luminaires to provide illumination levels, focusing, and distribution patterns to the Owner's satisfaction.

END OF SECTION

SECTION 265600 – EXTERIOR LIGHTING

PART 1 GENERAL
1.01 ADMINISTRATIVE REQUIREMENTS: Furnish bolt templates and pole mounting accessories to installer of pole foundations.
1.02 QUALITY ASSURANCE
A. Provide only luminaires that are listed for the environment in which they are installed; luminaires shall carry damp location and/or wet location ratings as required.
B. Confirm all luminaire and accessory finishes with the Architect prior to ordering.
C. Coordinate exact locations of all pole-mounted site lighting with the Civil Plan(s); luminaire locations on the Civil Plan(s) take precedence over locations indicated on the electrical plans.

PART 2 PRODUCTS
2.01 LUMINAIRES
A. Provide as indicated on the Drawings.
B. The acceptability of any substitute fixtures lies solely with the Architect and Engineer.
C. The specified luminaire shall be provided at no additional cost where a substitute fixture is not accepted by the Architect or Engineer.
2.02 NON-DIMMING BALLASTS, TRANSFORMERS, AND DRIVERS: See Section 265100 paragraph 2.02 and all subparagraphs.
2.03 LAMPS: See Section 265100 paragraph 2.03 and all subparagraphs.
2.04 POLES
A. Shape: As indicated on the Drawings.
B. Height: As indicated on the Drawings; provide hinged poles for poles located on top deck of parking structures.
C. Material: As indicated on the Drawings
D. Metal Gauge: As required to support the weight and effective projected area (EPA) of the luminaire and all associated mounting hardware at the design windspeed for the project.
E. Drilling: As required for the installed luminaires.
F. Handhole: Provide.
G. Fusing: Provide 20 amp in-line fuseholder with Class CC fuse located within handhole when luminaire is served by branch circuit rated greater than 20 amps.
H. Anchor Bolts: Provide as required for the pole.
I. Anchor Bolt Cover: Provide.
J. Receptacle: Provide NEMA 5-15R weatherproof GFCI duplex receptacle with weatherproof while-in-use cover when indicated.
1. Provide 300 volt-amp transformer with fused primary and fused secondary located within handhole to serve receptacle when the branch circuit serving the luminaire operates at a voltage other than 120 volts unless the plans indicate a separate 120 volt circuit serving the receptacle.
K. Supplemental Ground Electrode: Provide supplemental ground rod electrode at each pole.
2.05 ACCESSORIES
A. Provide all supplementary items, appurtenances, and devices incidental to or necessary for a sound, secure, and complete installation including, but not limited to:
1. Pole bases as indicated on the Drawings and as recommended by the pole manufacturer.
2. All mounting arms, tenons, stanchions, yokes, knuckles, ground lugs, etc. necessary to mount the luminaires in a proper and approved method.
3. House-side shields for pole-mounted luminaires installed along the perimeter of the property.
4. All necessary low-voltage transformers, connectors, mounting hardware, etc. for a complete low-voltage lighting system.

PART 3 EXECUTION
3.01 INSTALLATION
A. Install luminaires in locations shown; pole-mounted site lighting luminaire locations on the Civil Plan(s) take precedence over locations indicated on the electrical plans.
B. Install luminaires and poles plumb and level; provide shims or double nuts to adjust plumb.
C. Grout around each pole base.
D. Connect luminaires to branch circuit.
E. Provide supplementary grounding electrode at each pole.
F. Bond luminaires, metal accessories, and metal poles to branch circuit equipment grounding conductor.
3.02 CLOSEOUT
A. Replace any lamps and ballasts that expire before the Owner's acceptance of the project.
B. Aim and adjust all luminaires to provide illumination levels, focusing, and distribution patterns to the Owner's satisfaction.

SECTION 271005 – TELEPHONE AND DATA SYSTEMS

PART 1 GENERAL
1.01 PREPARATION
A. Coordinate all demarcation locations with the serving utility and/or the Landlord.
B. Hold meeting with the Owner prior to commencing work.
1. Determine Scope of Work and Division of Responsibility.
2. Determine quantities of phone drops and data drops are required at each outlet box.
3. Confirm all cabling, termination, cross-connection equipment, enclosure, and jack requirements.

PART 2 PRODUCTS
2.01 ENCLOSURES
A. Backboards: Provide 3/4 inch thick UL-labeled, fire-retardant, interior grade plywood; size as indicated on the Drawings.
B. Equipment Racks: Only if required pursuant to meeting with the Owner:
1. Wall-Mounted Racks: Chatsworth Products Standard Swing Gate series; 19 inches wide, depth as required for installed components, and height as required for installed components plus 50 percent.
2. Floor-Mounted Racks: Chatsworth Products 50120 QuadraRack series with vertical and horizontal cable management, top and bottom cable troughs, and grounding lug; 19 inches wide, 29 inches deep, and height as required for installed components plus 50 percent.
2.02 OUTLET BOXES
A. Wall: 4-square by 2-1/8 inch deep outlet box with single gang mud ring and cover plate unless indicated otherwise or otherwise required.
B. Floor: As indicated on the Drawings or within Section 260537 unless indicated otherwise or otherwise required.
C. Wall Plates:
1. Provide standard-size nylon blank wall plates unless indicated otherwise; color as selected by the Architect. Mid-size or jumbo wall plates are not permitted.
2. When cabling is to be provided by this Contractor, provide standard-size nylon modular keystone jack cover plates compatible with the associated modular keystone jacks and with appropriate number of jacks unless indicated otherwise; color as selected by the Architect.
2.03 PATHWAYS
A. All Pathways:
1. See Section 260534 for permitted conduit types.
2. Provide pullstring in each conduit.
B. Service Entrance: Conduit with extended radius sweeps; size as indicated or otherwise required.
C. Branch Wiring: Provide 3/4 inch minimum conduit from all outlet boxes to accessible ceiling space unless indicated otherwise.
2.04 COPPER CABLES, PLUGS, AND JACKS: Only if required pursuant to meeting with the Owner:
A. Data:
1. All Data Cabling: Unshielded twisted pair (UTP) Category 5e unless indicated otherwise or otherwise required.
2. Backbone (Riser) Cabling: Type CMR when installed in conduit and Type CMP when not installed in conduit; gray jacket unless indicated otherwise or otherwise required.
3. Horizontal Cabling: Type CM when installed in conduit and Type CMP when not installed in conduit; blue jacket unless indicated otherwise or otherwise required.
4. Plugs: Category 5e UTP non-keyed 8-wire modular plugs unless indicated otherwise or otherwise required.
5. Jacks: Category 5e UTP non-keyed 8-wire RJ45 modular keystone jack unless indicated otherwise or otherwise required; color as selected by the Owner.
B. Telephone:
1. All Telephone Cabling: Unshielded twisted pair (UTP) Category 3 unless indicated otherwise or otherwise required.
2. Horizontal Cabling: Type CM when installed in conduit and Type CMP when not installed in conduit; blue jacket unless indicated otherwise or otherwise required.
3. Plugs: Category 3 UTP non-keyed 8-wire modular plugs unless indicated otherwise or otherwise required.
4. Jacks: Category 3 UTP non-keyed 8-wire RJ45 modular keystone jack unless indicated otherwise or otherwise required; color as selected by the Owner.
2.05 CROSS-CONNECTION EQUIPMENT: Only if required pursuant to meeting with the Owner:
A. Connector Blocks for Category 3 Cabling: Type 66 insulation displacement connectors unless indicated otherwise or otherwise required with capacity sufficient for cables to be terminated plus 25 percent spare.
B. Connector Blocks for Category 5e Cabling: Type 110 insulation displacement connectors unless indicated otherwise or otherwise required with capacity sufficient for cables to be terminated plus 25 percent spare.
C. Patch Panels for Copper Cabling: Panduit DP5e series UTP patch panel unless indicated otherwise or otherwise required with quantity of ports sufficient for cables to be terminated plus 25 percent spare.
D. Patch Cords: Provide one Category 5e patch cord for each pair of patch panel ports.

PART 3 EXECUTION
3.01 INSTALLATION OF ENCLOSURES
A. Backboards: Install at locations indicated on the Drawings.
B. If required pursuant to meeting with the Owner:
1. Wall-Mounted Racks: Install to plywood backboard at locations directed by the Owner.
2. Floor-Mounted Racks: Permanently anchor to floor in accordance with manufacturer's recommendations at locations directed by the Owner, connect adjacent racks together, and remove interior side panels.
3.02 INSTALLATION OF OUTLET BOXES
A. Install in compliance with Section 260537.
B. Mounting Heights: See Section 262726.
3.03 INSTALLATION OF PATHWAYS
A. All Pathways:
1. Install all pathways with the following minimum clearances:
a. 48 inches from motors, generators, frequency converters, transformers, x-ray equipment, and uninterruptible power systems.
b. 12 inches from power conduits and cables and panelboards.
c. 5 inches from fluorescent and high frequency lighting fixtures.
d. 6 inches from flues, hot water pipes, and steam pipes.
B. Conduit:
1. Install conduit in compliance with Section 260534 unless indicated otherwise.
a. Do not install more than two 90 degree bends in a single horizontal cable run.
b. Leave pull cords in place where cables are not initially installed.
c. Under floor slabs, locate conduit at 12 inches minimum below vapor retarder and seal penetrations of vapor retarder around conduit.
2. Underground Service Entrance: Install conduit at least 18 inches below finish grade and encase in at least 3 inches thick concrete for at least 60 inches out from the building line.
C. Grounding and Bonding: Perform in accordance with ANSI/J-STD-607 and NFPA 70.
3.04 INSTALLATION OF CABLES, PLUGS, AND JACKS
A. Only if required pursuant to meeting with the Owner:
1. Install cables from outlet to cross-connection equipment as directed by the Owner.
2. Do not exceed 300 feet from outlet to switch.
3. Do not bend cable tighter than the greater of the manufacturer's recommended bend radius or 4 times the cable diameter.
4. Do not exceed the greater of the manufacturer's recommended cable pull tension or 25 pounds.
5. Use only lubricants approved by cable manufacturer when installing cables in conduit and do not chafe or damage outer jacket.
6. Install plugs and jacks as required.
7. Provide the following minimum extra length of cable, looped neatly:
a. At Patch Panels: 10 feet.
b. At Outlets: 12 inches.
8. Install labels complying with TIA/EIA-606 using coded identifiers:
a. Cables: Color coded labels on each end.
b. Outlets: Label each jack on its cover plate with a unique numerical identifier as to its type and function.
c. Patch Panels: Label each jack with a unique numerical identifier as to its type and function.
d. Patch Cords: Label with jack identifier corresponding to initial installation.

PAUL DHANENS • ARCHITECT

ARCHITECT

LICENSED ARCHITECT
PAUL DHANENS
NO. C-23843
RENEWAL
STATE OF CALIFORNIA

5100 CALIFORNIA AVE, SUITE 107
BAKERSFIELD, CALIFORNIA 93309
TELEPHONE: (661) 326-8936
FACSIMILE: (661) 326-8937

CONSULTANT

COPYRIGHT

PAUL DHANENS ARCHITECT expressly reserves its copyright and other property rights in these documents which are not to be reproduced, changed or copied in any written, graphic or electronic form, nor assigned to any third party without the expressed written consent of PAUL DHANENS ARCHITECT.

NOTICE TO CONTRACTORS
Written dimensions on these drawings shall take precedence over scaled dimensions. Contractor shall verify and be responsible for confirming all dimensions and shall notify the architect immediately of any descripencies or field variations discovered.

PROJECT

TENANT IMPROVEMENT FOR

1966 WEST AVE L
LANCASTER, CA

DATE	ISSUED FOR
9-24-18	BUILDING DEPT SUBMITTAL
6-26-19	

NO.	REVISIONS
1	
2	
3	
4	

ELECTRICAL

FILE NAME: 2366A2-0

SHEET

E-602

3.05 INSTALLATION OF CROSS-CONNECTION EQUIPMENT
A. Only if required pursuant to meetings with the Owner:
1. Install connector blocks at backboards as directed by the Owner.
2. Install patch panels in equipment racks as directed by the Owner.
3. Install labels complying with TIA/EIA-606 using coded identifiers:
a. Patch Panels: Label each jack with a unique numerical identifier as to its type and function.
b. Patch Cords: Label with jack identifier corresponding to initial installation.

END OF SECTION

SECTION 283100 – FIRE DETECTION AND ALARM

PART 1 GENERAL
1.01 ADMINISTRATIVE
A. The word "should" used in NFPA 72 shall be considered a mandatory requirement.
1.02 PREPARATION
A. Examine the plans of all trades to determine scope of fire alarm and detection work including, but not limited to:
1. Architectural plans to determine occupancy classification, occupant loads, and locations where voice alarm will be required.
2. Fire sprinkler plans, including fire sprinkler plans that are designed by others, to determine locations of all flow switches, tamper switches, post indicator valves, corrosion monitoring probes, dry-type system compressors, and fire pumps.
3. Mechanical plans to determine locations of all individual HVAC units rated equal to or greater than 2,000 cubic feet per minute (CFM), locations of HVAC units serving the same room or area where the total aggregate capacity of the units is equal to or greater than 2,000 cubic feet per minute (CFM), locations of HVAC units sharing a common return air plenum where the total aggregate capacity of the units is equal to or greater than 2,000 cubic feet per minute (CFM), smoke dampers, smoke exhaust equipment, and Type 1 grease hood fire suppression systems.
B. Coordinate all notification appliance colors with the Architect.
1.03 SYSTEM DESIGN
A. Provide a fully engineered Code-compliant design of the fire detection and alarm system from a Fire Alarm Designer.
B. The Fire Alarm Designer shall be a NICET Level III or IV (3 or 4) certified fire alarm technician, registered fire protection engineer, employee of the fire alarm control unit manufacturer, or Contractor with experience designing fire detection and alarm systems in the jurisdictional area.
C. The Fire Alarm Designer shall develop all fire detection and alarm plans, riser diagrams, calculations, and equipment submittal packages required by NFPA 72-2013 section 7.4 and the Authority Having Jurisdiction and submit the same as a deferred permit.
D. The General Contractor shall include all costs associated with the development of the fully engineered fire detection and alarm plans and permit fees in the BID.
E. Any fire detection and alarm information indicated on the Drawings is strictly for the purpose of establishing a minimum criteria to aid the Fire Alarm Designer in the design of the fully engineered fire alarm drawings. The Fire Alarm Designer is responsible to provide a design that is fully compliant with all applicable Codes and jurisdictional requirements.

PART 2 PRODUCTS
2.01 GENERAL
A. All new fire alarm initiation devices, including new initiation devices added to existing systems, shall be of the same manufacturer as the control unit and fully compatible with the system.
2.02 NEW FIRE ALARM AND DETECTION SYSTEMS
A. Fire Detection and Alarm System:
1. Control Unit: Notifier #NFW2-100 unless indicated otherwise.
2. Communicator: Digital Alarm Communicator Transmitter (DACT) connected to central station.
3. Secondary Power: Storage battery and battery charger capable of operating entire system for period of time specified by NFPA 72 plus 25 percent spare capacity.40. Auxiliary Battery Cabinet: As required for the batteries installed within.
5. Relay Module: As required for a complete operational system.
6. Remote Annunciator: Notifier #N-ANN-80-W unless indicated otherwise; provide when control unit is installed at a location other than the First Responder's primary point of entry.
B. Voice Alarm System:
1. Control Unit: Notifier #NFC-50-100 unless indicated otherwise.
2. Secondary Power: Storage battery and battery charger capable of operating entire system for period of time specified by NFPA 72 plus 25 percent spare capacity.
3. Auxiliary Battery Cabinet: As required for the batteries installed within.
4. Audio Amplifier Modules: As required for speakers served.
2.03 INITIATING DEVICES
A. Smoke Detectors:
1. Detector: Notifier #NP-100 unless indicated otherwise.
2. Base: Notifier #B210LP unless indicated otherwise; provide Notifier #B224RB relay base when smoke detector is used for door releasing service.
B. Duct Smoke Detectors:
1. General:
a. Provide for each HVAC unit rated equal to or greater than 2,000 cubic feet per minute.
b. Provide for all HVAC units serving the same room or area where the total aggregate capacity of the units is equal to or greater than 2,000 cubic feet per minute.
c. Provide for all HVAC units that share a common return air plenum where the total aggregate capacity of the units is equal to or greater than 2,000 cubic feet per minute.
d. Provide as required for control of each smoke damper.
2. Detector: Notifier #NP-100R1 base unless indicated otherwise.
3. Housing: Notifier #DNR unless indicated otherwise.
4. Sampling Tube: As required for the duct.
5. Remote Test Stations: Notifier #RTS151KEY unless indicated otherwise; provide when duct smoke detector is installed in a concealed location greater than 10 feet above finished floor or when duct smoke detector's status indicators are not readily visible.
6. Remote Alarm LED Annunciators: Notifier #RA100A unless indicated otherwise; provide for each duct smoke detector that is not connected to a fire alarm control unit.
C. Heat Detectors:
1. Detector: Notifier #NH-100R unless indicated otherwise.
2. Base: Notifier #B210LP unless indicated otherwise; provide Notifier #B224RB relay base when heat detector is used for elevator shunt trip.
D. Manual Pull Stations: Notifier #NOT-BG12LX unless indicated otherwise; semi-flush mounted in all finished areas and surface mounted with #SB-10 backbox in unfinished areas.
2.04 NOTIFICATION APPLIANCES
A. General:
1. All notification appliances shall be from the same manufacturer.
2. All notification appliances shall be semi-flush mounted in all finished areas; notification appliances are permitted to be surface mounted in unfinished areas.
3. All notification appliance housings shall be white unless indicated otherwise or unless the Authority Having Jurisdiction requires red housings.
4. Provide strobe synchronization modules when more than one strobe is located within a viewing area.
B. Horns: System Sensor #HW unless indicated otherwise.
C. Strobes: System Sensor #SW for wall-mount and #SCW for ceiling-mount unless indicated otherwise.
D. Combination Horn/Strobes: System Sensor #P2W for wall-mount and #PC2W for ceiling-mount unless indicated otherwise.
E. Speakers: System Sensor #SPW for wall-mount and #SPCW for ceiling-mount unless indicated otherwise.
F. Combination Speaker/Strobes: System Sensor #SPSW for wall-mount and #SPSCW for ceiling-mount unless indicated otherwise.
G. Exterior Combination Speaker/Strobes: System Sensor #P2RK unless indicated otherwise.
2.05 AUXILIARY DEVICES
A. Addressable Monitor Modules: As required for a complete operational system.
B. Addressable Control Modules: As required for a complete operational system.
C. Addressable Relay Modules: As required for a complete operational system.
D. Door Holders: Notifier DH24120 series with 24 volt coil and 40 pounds of holding force unless indicated otherwise; coordinate selection of door holders with architectural hardware requirements and verify required clearances, sizes and locations to operate properly with the doors and hardware specified.
E. Notification Appliance Circuit Power Supplies: As required for a complete operational system.
F. End-of-Line Resistors: As recommended by the manufacturer.
G. Wireguards: Provide for any wall-mounted notification appliances located in gymnasiums or where otherwise exposed to physical damage.
2.06 COMBINATION SMOKE/CARBON MONOXIDE ALARMS
A. Kidde #12010SCO unless indicated otherwise; for use within individual dwelling units only.
2.07 CONDUIT: See section 260534; painted red.
2.08 BOXES: See section 260537; painted red.
2.09 WIRE AND CABLE
A. All Wire and Cable:
1. Riser Cabling: Unshielded Type FPLR when installed in conduit and Type FPLP when not installed in conduit unless indicated otherwise or otherwise required; red jacket.
2. Horizontal Cabling: Unshielded Type FPL when installed in conduit and Type FPLP when not installed in conduit unless indicated otherwise or otherwise required; red jacket.
B. Initiating Device Circuits (IDC):
1. Number of Conductors: As recommended by the manufacturer.
2. Conductor Size: As recommended by the manufacturer but not smaller than 18 AWG.
C. Signaling Line Circuits (SLC):
1. Number of Conductors: As recommended by the manufacturer.
2. Conductor Size: As recommended by the manufacturer but not smaller than 18 AWG.
D. Notification Appliance Circuits (NAC):
1. Number of Conductors: As recommended by the manufacturer.
2. Conductor Size: As recommended by the manufacturer but not smaller than 14 AWG.

PART 3 EXECUTION
3.01 COORDINATION WITH OTHER TRADES
A. Coordinate all fire alarm work with all other trades including, but not limited to:
1. Connection of all fire sprinkler monitoring components including all flow switches, tamper switches, post indicator valves, corrosion monitoring probes, dry-type system compressors, and fire pumps with the Fire Sprinkler Contractor.
2. Connection of all individual HVAC units rated equal to or greater than 2,000 cubic feet per minute (CFM), locations of HVAC units serving the same room or area where the total aggregate capacity of the units is equal to or greater than 2,000 cubic feet per minute (CFM), locations of HVAC units sharing a common return air plenum where the total aggregate capacity of the units is equal to or greater than 2,000 cubic feet per minute (CFM), smoke dampers, smoke exhaust equipment, and Type 1 grease hood fire suppression systems with the Mechanical Contractor.
3. Connection of all elevator controllers and elevator recall systems with the Vertical Transportation Contractor.
4. Locations where boxes and/or conduit are to be roughed-in for initiating devices and/or notification appliances and locations where 120 volt power is required with the Electrical Contractor.
B. Change orders arising from a lack of coordination with the other trades will not be considered.
3.02 INSTALLATION
A. Install all components in accordance with all applicable codes including, NFPA 70, NFPA 72, and the applicable Fire and Building Codes.
B. Install all products in strict accordance with manufacturer's instructions.
C. Obtain Owner's approval of locations of all components prior to rough-in.
D. Install components at the following mounting heights:
1. Control Units: Top at 72 inches above finished floor.
2. Remote Annunciators: Top at 60 inches above finished floor.
3. Manual Pull Stations: Centerline at 46 inches above finished floor.
4. Audible Notification Appliances: Top at 90 inches above finished floor or 6 inches below finished ceiling, whichever is lower.
5. Visible Notification Appliances: Top at 96 inches above finished floor or 6 inches below finished ceiling, whichever is lower.
6. Combination Audible/Visual Notification Appliances: Top at 96 inches above finished floor or 6 inches below finished ceiling, whichever is lower.
E. Make conduit and wiring connections to all initiating devices, notification appliances, control units, fire sprinkler system components, HVAC system components, smoke control system components, vertical transportation components, grease hood fire suppression system components, monitor modules, control modules, relay modules, etc. for a complete fully functional system.
F. Install outlet boxes for door holders to withstand 80 pounds of pulling force.
G. Install control relays within 3 feet of the controlled equipment.
H. Install duct smoke detector remote test stations and/or remote alarm LED annunciators; coordinate locations with the Owner and the Authority Having Jurisdiction prior to rough-in.
I. Install end-of-line resistor in box with last device or separate box adjacent to last device in circuit.
J. Conceal all wiring, conduit, boxes, and supports where located within finished areas.
K. Install all concealed, inaccessible wiring, including wiring installed in walls, and all exposed wiring in conduit in accordance with NFPA 70.
1. Wiring may be installed without conduit where accessible and not subject to damage only when specifically permitted by the Authority Having Jurisdiction.
L. Plenum rated cable may be used only where concealed above accessible tile ceilings or accessible shafts.
M. Separate cables from any open conductors of Class 1 circuits and do not place in any conduit, junction box, or raceway containing Class 1 cables.
N. Provide the following circuit classes:
1. Initiating Device Circuits (IDC): Class B.
2. Signaling Line Circuits (SLC) Within Building: Class B.
3. Signaling Line Circuits (SLC) Between Buildings: Class A.
4. Notification Appliance Circuits (NAC): Class B.
5. Door Holders: Class D.
O. Provide a minimum of 25 percent spare capacity on all circuits.
P. Connect control unit to a separate dedicated branch circuit with a separate, red, dedicated circuit breaker with lock-on accessory and label circuit as FIRE ALARM.
Q. Connect any 120 volt exterior fire sprinkler alarm bells to the same circuit serving the control unit.
R. Install instruction cards and labels; provide legible, permanent labels for each control device, using identification used in operation and maintenance data.
3.03 FIRE SAFETY SYSTEMS INTERFACES
A. Provide the following fire safety system interfaces upon activation. Coordinate all components requiring interface, including exact locations, with the associated Contractor. Change orders arising from a lack of coordination with the other trades will not be considered.
1. General:
a. Manual Pull Stations: Transmit alarm signal to control unit.
b. Smoke Detectors: Transmit alarm signal to control unit.
c. Heat Detectors: Transmit alarm signal to control unit.
2. Fire Sprinkler Systems:
a. Flow Switches: Transmit alarm signal to control unit.
b. Tamper Switches: Transmit supervisory signal to control unit.
c. Post Indicator Valves: Transmit supervisory signal to control unit.
d. Corrosion Monitoring Probes: Transmit supervisory signal to control unit.
e. Pressure Monitoring Systems: Transmit supervisory signal to control unit.
f. Fire Pumps: Transmit supervisory signal to control unit per NFPA 20 and NFPA 72.
3. HVAC System Duct Smoke Detectors:
a. Shut down supply fan on each individual unit rated equal to or greater than 2,000 cubic feet per minute.
b. Shut down all supply fans on all units that share a common return air plenum where the total aggregate capacity of the units is equal to or greater than 2,000 cubic feet per minute.
c. Shut down all supply fans on all units that serve a common room or area where the total aggregate capacity of the units is equal to or greater than 2,000 cubic feet per minute.
d. Close smoke dampers.
e. Transmit alarm or supervisory signal to control unit; coordinate required signal type with the Authority Having Jurisdiction.
4. Grease Hood Fire Suppression System:
a. Disconnect power to all appliances located under hood.
b. Close gas valve(s) serving appliances located under hood.
c. Shut down all supply air fan(s).
d. Start hood exhaust fan(s) if not already running.
e. Transmit alarm signal to control unit.
5. Smoke Exhaust:
a. Shut down all supply air fan(s).
b. Start smoke exhaust fan(s).
c. Transmit alarm signal to control unit.
6. Smoke Barrier Door Holders:
a. Release upon activation of smoke detectors on either side of door.
b. Release upon activation of manual pull station on the same floor.
c. Release upon activation of fire sprinkler flow switch.
7. Electromagnetic Locks on Egress Doors: Release upon any alarm signal.
8. Vertical Transportation:
a. Elevator Shutdown Control Circuits: Transmit supervisory signal to control unit.
b. Smoke Detectors in Elevator Lobbies, Machine Rooms, and Hoistways:
1. Activate elevator recall.
2. Transmit alarm signal to control unit.
c. Heat Detectors in Elevator Machine Rooms and Hoistways:
1. Shunt trip elevator controller prior to machine room and hoistway fire sprinkler activation
2. Transmit alarm signal to control unit.
9. Fire Alarm Wiring:
a. Open Circuit: Transmit trouble signal to control unit.
b. Single Ground: Transmit trouble signal to control unit.
c. Short Circuit: Transmit trouble signal to control unit.
3.04 SEQUENCE OF OPERATION
A. Alarm:
1. Visual and audible alarm at control unit.
2. Visual and audible alarm at remote annunciator.
3. Transmit alarm signal to central station.
4. Activate visual notification appliances.
5. Activate audible notification appliances.
6. Transmit signal to building mechanical systems to initiate supply air fan shut down.
7. Transmit signal to building mechanical systems to close smoke damper(s).
8. Transmit signal to building mechanical system to grease hood exhaust fan(s).
9. Transmit signal to building mechanical system to start smoke exhaust fan(s).
10. Transmit signal to elevator controllers to initiate elevator recall.
B. Supervisory:
1. Visual and audible alarm at control unit.
2. Visual and audible alarm at remote annunciator.
3. Transmit supervisory signal to central station.
C. Trouble:
1. Visual and audible alarm at control unit.
2. Visual and audible alarm at remote annunciator.
3. Transmit trouble signal to central station.
4. Manual acknowledge silences audible trouble alarm at control unit and remote annunciator but visual alarm remains displayed until trouble condition is cleared.
3.05 INSPECTION, TESTING, AND ADJUSTMENT
A. Complete NFPA 72 "RECORD OF COMPLETION" form.
B. Notify the Authority Having Jurisdiction and comply with their requirements for scheduling inspections and tests and for observation by their personnel.
C. Perform inspection and testing in accordance with NFPA 72 and requirements of the Authority Having Jurisdiction.
D. Document each inspection and test, correct any defective work, and retest until entire system complies with the requirements of NFPA 72, the Authority Having Jurisdiction, and the Contract Documents.
3.06 PERSONNEL INSTRUCTION
A. Provide hands-on instruction for the Owner's designated representative.
B. Provide the services of instructors, teaching aids, and copies of operation and maintenance data during instruction.
3.07 CLOSEOUT
A. Substantial Completion: Substantial Completion cannot be achieved until inspection and testing is successful, all aspects of operation have been demonstrated to Owner, final acceptance of the fire alarm system has been given by the Authority Having Jurisdiction, the occupancy permit has been issued, and the personnel instruction is complete.
B. Demonstration: Demonstrate proper operation of all functions to Owner. Demonstration may be combined with inspection and testing required by the Authority Having Jurisdiction.
C. Closeout Documentation and Materials:
1. Provide the following closeout documentation and materials to the Owner:
a. Manufacturer's cut sheets, owner's manual, manufacturer's published instructions, and troubleshooting guides covering all system equipment.
b. Detailed but easy to read explanation of procedures to be used by non-technical personnel in the event of system trouble, when routine testing is being conducted, and for fire drills.
c. Record drawings complying with NFPA 72-2013 section 7.5.5.
d. NFPA 72-2013 "RECORD OF COMPLETION" form.
e. NFPA 72-2013 "SYSTEM RECORD OF INSPECTION AND TESTING" form.
f. Preventive maintenance schedule.
g. Testing and inspection procedures and schedule.
2. All closeout documentation shall be neatly organized in a three-ring binder with labeled dividers separating sections.
3.08 MAINTENANCE CONTRACT
A. Provide, as an alternate to the base bid for later acceptance by the Owner, a proposal for a two-year maintenance contract that includes:
1. Services to perform routine inspection, testing, and preventive maintenance required by NFPA 72, including maintenance of fire safety interface and supervisory devices connected to fire alarm system, and repairs required.
2. Record keeping required by NFPA 72 and the Authority Having Jurisdiction.
3. Trouble call-back service upon notification by the Owner within two hours of notification.
a. Include allowance for call-back service during normal working hours at no extra cost to Owner.
b. Owner will pay for call-back service outside of normal working hours on an hourly basis, based on actual time spent at site and not including travel time.
c. Include hourly rate and definition of normal working hours in maintenance contract.
4. A complete description of proposed preventive maintenance, systematic examination, adjustment, cleaning, inspection, and testing, with a detailed schedule.
5. Maintenance of a log at each control unit, listing the date and time of each inspection and call-back visit, the condition of the system, nature of the trouble, correction performed, and parts replaced.
6. Providing an updated NFPA 72-2013 "SYSTEM RECORD OF INSPECTION AND TESTING" form to Owner's representative upon completion of site visit.
7. Include the total cost of contract.
B. Proposal shall be valid for a minimum of 30 days after date of Substantial Completion.

END OF SECTION

PAUL DHANENS • ARCHITECT

ARCHITECT

REGISTERED ARCHITECT
PAUL DHANENS
NO. C-23843
RENEW:
STATE OF CALIFORNIA

5100 CALIFORNIA AVE., SUITE 107
BAKERSFIELD, CALIFORNIA 93309
TELEPHONE: (661) 326-8336
FACSIMILE: (661) 326-8337

CONSULTANT

COPYRIGHT

PAUL DHANENS ARCHITECT expressly reserves its copyright and other property rights in these drawings which may not be reproduced, changed or copied in any written, graphic or electronic form, nor assigned to any third party without the expressed written consent of PAUL DHANENS ARCHITECT.

NOTICE TO CONTRACTORS
Written dimensions on these drawings shall take precedence over scaled dimensions. Contractor shall verify and be responsible for confirming all dimensions and shall notify the Architect immediately of any descrepancies or field variations discovered.

PROJECT

TENANT IMPROVEMENT
FOR

FAMOUS FOR Steak 'n Shake STEAKBURGERS

1966 WEST AVE L
LANCASTER, CA

DATE	ISSUED FOR
9-24-18	BUILDING DEPT SUBMITTAL
6-26-19	

NO.	REVISIONS
△	
△	
△	
△	

ELECTRICAL

FILE NAME: 2366A2-0

SHEET

E-603

GENERAL NOTES:

A. EXISTING CONDITIONS ARE BASED ON RECORD DRAWINGS PROVIDED BY THE OWNER. CONTRACTOR SHALL ADJUST TO ACTUAL FIELD CONDITIONS AT NO ADDITIONAL EXPENSE TO THE PROJECT.

B. CONTRACTOR SHALL BE RESPONSIBLE FOR FIELD VERIFICATION OF ALL EXISTING CONDITIONS PRIOR TO SUBMITTING HIS BID. NO ADDITIONAL COMPENSATION WILL BE PROVIDED FOR ANY EXTRAS DUE TO THE CONTRACTOR'S FAILURE TO VISIT THE PROJECT SITE PRIOR TO SUBMITTING THE BID. ANY DISCREPANCIES SHALL BE IMMEDIATELY REPORTED TO THE ENGINEER FOR RESOLUTION.

C. ALL WORK SHALL BE COMPLETED IN ACCORDANCE WITH ALL APPLICABLE GOVERNMENT AND LOCAL CODES.

D. MECHANICAL CONTRACTOR SHALL FIELD COORDINATE WITH ELECTRICAL CONTRACTOR FOR ALL POWER REQUIREMENTS.

E. ALL CONTRACTORS SHALL REVIEW A COMPLETE SET OF CONSTRUCTION DOCUMENTS AND COOPERATE WITH THE OTHER TRADES SO THAT THE INSTALLATION OF ALL EQUIPMENT MAY BE PROPERLY COORDINATED.

F. ALL EQUIPMENT FURNISHED SHALL FIT THE SPACE AVAILABLE WITH CONNECTIONS IN THE REQUIRED LOCATIONS AND WITH ADEQUATE SPACE FOR OPERATING AND SERVICING. THE DRAWINGS ARE GENERALLY DIAGRAMMATIC AND INDICATE THE INTENT OF THE INSTALLATION WHILE THE SPECIFICATIONS AND EQUIPMENT LIST DENOTE THE TYPE AND QUALITY OF MATERIAL AND WORKMANSHIP TO BE USED. THE DRAWINGS SHALL NOT BE SCALED FOR EXACT MEASUREMENTS. WHERE A CONFLICT EXISTS BETWEEN THE DRAWINGS AND THE SPECIFICATIONS, THE HIGHER AND/OR MORE COSTLY STANDARD WILL APPLY. THE CONTRACTOR SHALL PROMPTLY NOTIFY THE ENGINEER WHOSE DECISION SHALL BE FINAL. NO ALLOWANCE WILL BE MADE SUBSEQUENTLY IN THIS REGARD ON BEHALF OF THE CONTRACTOR AFTER AWARD OF THE CONTRACT.

G. COORDINATE DUCT ROUTING AND HEIGHTS WITH GENERAL CONTRACTOR. VERIFY ALL CLEARANCES BEFORE STARTING WORK.

H. THE CONTRACTOR SHALL INSTALL ALL PIPING, DUCTWORK AND EQUIPMENT AS REQUIRED TO CONFORM TO THE STRUCTURE, AVOID OBSTRUCTIONS, PRESERVE CEILING HEIGHTS AND HEADROOM AND MAKE ALL EQUIPMENT REQUIRING MAINTENANCE OR REPAIR ACCESSIBLE.

I. ALL DUCT CONNECTIONS TO HVAC EQUIPMENT MUST BE MADE WITH FLEXIBLE CONNECTORS.

J. DO NOT ATTACH ANYTHING TO DECK ABOVE. ATTACH TO STRUCTURE (i.e. BEAMS, JOISTS) ONLY. DUCT HANGERS SHALL BE INSTALLED IN ACCORDANCE WITH LOCAL CODE. ALL CONNECTIONS TO JOISTS SHALL BE MADE AT THE TOP CORD.

K. ALL DUCT DIMENSIONS INDICATED ARE CLEAR INSIDE DIMENSIONS. ALL SUPPLY AND UNTEMPERED OUTDOOR AIR DUCTWORK SHALL BE LINED WITH 1-1/2" ACOUSTICAL DUCT LINER OR WRAPPED WITH 2" THICK FIRE RETARDANT FIBERGLASS WITH A REINFORCED ALUMINUM FOIL JACKET AND SHALL BE APPROVED FOR USE BY SMACNA AND NAIMA. RETURN AIR TRANSFER DUCTS AND RETURN DUCTWORK WITHIN 10 FEET OF THE UNIT FAN SHALL BE LINED WITH 1" ACOUSTICAL DUCT LINER.

L. EXPOSED SPIRAL DUCT TO BE GALVANIZED FINISH, FREE FROM SCRATCHES, DENTS OR BLEMISHES AND PAINTED TO MATCH THE SURROUNDING AREA. DUCT SHALL BE INTERNALLY LINED AND SEALED WITH DUCT SEALER COMPLETELY CONCEALED WITHIN THE DUCT JOINT. NO EXPOSED SEALER OR TAPE WILL BE ACCEPTED.

M. ALL EXPOSED DUCTWORK SHALL BE INSTALLED THRU JOIST SPACE.

N. PROVIDE REMOTE VOLUME DAMPER CONTROL MANUFACTURED BY YOUNG REGULATOR OR UNITED ENERTECH FOR DAMPERS LOCATED ABOVE INACCESSIBLE CEILINGS. LOCATE CONTROLLER ABOVE ACCESSIBLE CEILING LOCATION.

O. TENANT'S CONTRACTOR SHALL BE RESPONSIBLE FOR THE FIELD VERIFICATION OF ALL UTILITY RUNS AND/OR OTHER IMPROVEMENTS LOCATED ON THE PREMISES PRIOR TO BIDDING. TENANT'S CONTRACTOR SHALL ALSO BE RESPONSIBLE FOR ALL COSTS RELATING TO THE RELOCATION OF, DAMAGE TO, REPAIR OF ANY EXISTING UTILITY RUNS AND/OR IMPROVEMENTS WHICH ARE DAMAGED AS A RESULT OF TENANT'S WORK IN OR AROUND THE PREMISES.

P. ROOF MOUNTED EQUIPMENT SHALL BE LABELED WITH THE TENANT NAME AND SPACE NUMBER WITH 3" HIGH WEATHER PROOF LETTERS.

Q. ALL GREASE EXHAUST DUCTWORK SHALL BE PROVIDED WITH 3" FOIL FACED THERMAL-CERAMIC INSULATION FOR GREASE DUCTS. INSULATION SHALL MEET NFPA 96 AND ASTM E 2336 REQUIREMENTS.

R. GREASE DUCT LEAKAGE TESTING MUST BE PERFORMED PRIOR TO CONCEALMENT OF THE DUCTWORK.

S. MECHANICAL CONTRACTOR SHALL PROVIDE TENANT WITH A WRITTEN ONE (1) YEAR MANUFACTURER'S WARRANTY ON ALL HVAC EQUIPMENT PROVIDED AND / OR INSTALLED. THE WARRANTY SHALL INCLUDE ALL LABOR, MATERIALS AND THREE (3) ROUTINE SERVICES INCLUDING FILTER CHANGES DURING A ONE (1) YEAR PERIOD.

T. AT THE COMPLETION OF CONSTRUCTION AN NEBB, AABC OR TABB CERTIFIED AIR BALANCE REPORT SHALL BE SUBMITTED TO THE ENGINEER AND LANDLORD. THE BALANCING MUST BE COMPLETED BY AN INDEPENDENT, THIRD PARTY CONTRACTOR WITH NO TIES TO THE INSTALLING CONTRACTORS.

HVAC NOTES:

1. CONTRACTOR SHALL UNDERCUT DOOR 3/4".
2. OPEN END RETURN AIR DUCT.
3. PROVIDE NEW FULLY DIGITAL 7 DAY PROGRAMMABLE TYPE THERMOSTAT WITH REMOTE SENSING CAPABILITIES, AUTO CHANGE OVER AND AUTO SET BACK AND HUMIDITY CONTROL. IF HUMIDITY CONTROL IS NOT AVAILABLE, PROVIDE SEPARATE HUMIDISTAT. MOUNT THERMOSTAT AT 48" ABOVE FINISHED FLOOR. COORDINATE LOCATION WITH WALL GRAPHICS LAYOUT. PROVIDE REMOTE TEMPERATURE SENSORS AS INDICATED ON PLAN.
4. DUCT SMOKE DETECTOR ON RETURN SIDE DUCT AND SHUTDOWN RELAY SHALL BE FURNISHED BY THE ELECTRICAL CONTRACTOR FOR INSTALLATION BY THE MECHANICAL CONTRACTOR. ALL WIRING SHALL BE BY THE ELECTRICAL CONTRACTOR.
5. INSTALL SUPPLY DUCTWORK TIGHT TO BOTTOM OF BEAM.
6. INSTALL SUPPLY DUCT BRANCHES WITHIN TRUSS SPACE, TYPICAL.
7. UP TO EF-1 ON ROOF. SEE ROOF PLAN FOR CONTINUATION.
8. UP TO EF-2 ON ROOF. SEE ROOF PLAN FOR CONTINUATION.
9. UP TO EF-3 ON ROOF. SEE ROOF PLAN FOR CONTINUATION.
10. PROVIDE VOLUME DAMPER AT EACH DROP TO HOOD AND BALANCE TO CFM INDICATED ON THE CAPTIVEAIRE HOOD DRAWINGS. DUCT SIZE SHALL MATCH HOOD CONNECTION SIZE. SEE SHEET H-101 FOR MORE INFORMATION.
11. CUSTOM FABRICATED TYPE 1 KITCHEN EXHAUST DUCT PROVIDED BY OWNER, INSTALLED BY MC UP TO EXHAUST FAN ON ROOF. COORDINATE WITH CAPTIVEAIRE DRAWINGS.
12. UP TO RTU-1 ON ROOF.
13. UP TO RTU-2 ON ROOF.
14. UP TO MAU-1 ON ROOF.
15. REMOTE HUMIDITY SENSOR MOUNTED AT 60" AFF FOR RTU-1.
16. REMOTE TEMPERATURE SENSOR MOUNTED AT 60" AFF FOR RTU-1.
17. REMOTE HUMIDITY SENSOR MOUNTED WITHIN RETURN DUCT FOR RTU-2. WIRE BACK TO THERMOSTAT AT MANAGER'S DESK.
18. REMOTE TEMPERATURE SENSOR MOUNTED WITHIN RETURN DUCT FOR RTU-2. WIRE BACK TO THERMOSTAT AT MANAGER'S DESK.
19. PROVIDE REMOTE VOLUME DAMPER CONTROL MANUFACTURED BY YOUNG REGULATOR OR UNITED ENERTECH FOR ALL DAMPERS LOCATED ABOVE INACCESSIBLE CEILINGS.
20. PROVIDE 26/14 PLENUM ABOVE RETURN GRILLES.

SYMBOLS

HEATING-VENTILATING-AIR CONDITIONING	
SYMBOL	DESCRIPTION
T	THERMOSTAT
S	REMOTE SENSOR
	SUPPLY DIFFUSER
	RETURN OR EXHAUST GRILLE
	SUPPLY OR FRESH AIR DUCT (SA OR FA)
	RETURN OR EXHAUST AIR DUCT (RA OR EA)
10/6	RECTANGULAR DUCT FIRST FIGURE IS SIDE SHOWN
SIZE 12"ø	ROUND DUCT
ELEV PLAN	VOLUME DAMPER (ELEV AND PLAN)
	TURNING VANES
CFM SIZE	SUPPLY REGISTER OR GRILLE (R OR G)
CFM SIZE	RETURN REGISTER OR GRILLE (R OR G)
CFM SIZE	FRESH AIR INTAKE (FA)
	SQUARE CEILING DIFFUSER (SUPPLY)

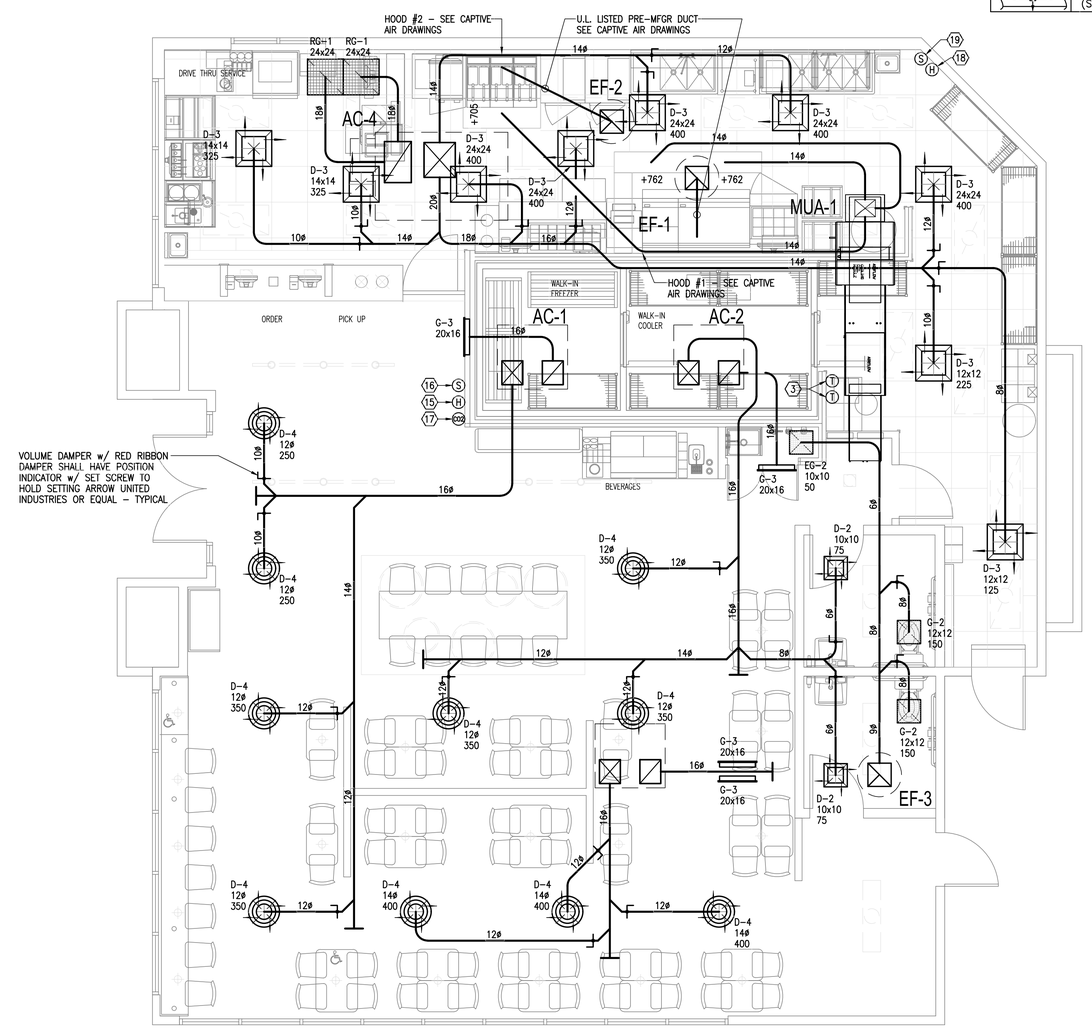

N

MECHANICAL PLAN 1/4"

PAUL DHANENS • ARCHITECT

ARCHITECT

REGISTERED PROFESSIONAL ENGINEER PAUL DHANENS NO. C-23843 RENEWAL STATE OF CALIFORNIA

5100 CALIFORNIA AVE., SUITE 107
BAKERSFIELD, CALIFORNIA 93309
TELEPHONE: (661) 326-8336
FACSIMILE: (661) 326-8337

CONSULTANT

COPYRIGHT

PAUL DHANENS ARCHITECT expressly reserves its copyright and other property rights in these documents which are not to be reproduced, changed or copied in any written, graphic, electronic or other form or assigned to any third party without the expressed written consent of PAUL DHANENS ARCHITECT.

NOTICE TO CONTRACTORS
Written dimensions on these drawings shall take precedence over scaled dimensions. Contractors shall verify and be responsible for confirming all dimensions and shall notify the architect immediately of any descriptancies or field variations discovered.

PROJECT

TENANT IMPROVEMENT FOR

FAMOUS FOR Steak 'n Shake STEAKBURGERS

1966 WEST AVE L
LANCASTER, CA

DATE	ISSUED FOR
9-24-18	BUILDING DEPT SUBMITTAL
6-26-19	

NO.	REVISIONS
△	
△	
△	
△	

MECHANICAL

FILE NAME: 2366A2-0

SHEET

M-101

HVAC NOTES:

1. PROVIDE NEW ROOFTOP UNIT AS SCHEDULED ON SHEET M-201.
2. PROVIDE NEW EXHAUST FAN AS NOTED ON PLANS AND SCHEDULED ON SHEET M-201. THE CONTRACTOR SHALL FIELD VERIFY THAT THE LOCATION SHOWN IS A MINIMUM OF 15'-0" FROM ANY OUTDOOR AIR INTAKE.
3. PROVIDE MAKEUP AIR UNIT PER CAPTIVEAIRE DRAWINGS.
4. TRANSITION RETURN AIR DROP DOWN TO 28/16 BEFORE PENETRATING ROOF DECK. ROUTE SUPPLY AND RETURN DROPS TO AVOID STRUCTURE.

GENERAL NOTES:

A. EXISTING CONDITIONS ARE BASED ON RECORD DRAWINGS PROVIDED BY THE OWNER. CONTRACTOR SHALL ADJUST TO ACTUAL FIELD CONDITIONS AT NO ADDITIONAL EXPENSE TO THE PROJECT.

B. CONTRACTOR SHALL BE RESPONSIBLE FOR FIELD VERIFICATION OF ALL EXISTING CONDITIONS PRIOR TO SUBMITTING HIS BID. NO ADDITIONAL COMPENSATION WILL BE PROVIDED FOR ANY EXTRAS DUE TO THE CONTRACTOR'S FAILURE TO VISIT THE PROJECT SITE PRIOR TO SUBMITTING THE BID. ANY DISCREPANCIES SHALL BE IMMEDIATELY REPORTED TO THE ENGINEER FOR RESOLUTION.

C. ALL WORK SHALL BE COMPLETED IN ACCORDANCE WITH ALL APPLICABLE GOVERNMENT AND LOCAL CODES.

D. MECHANICAL CONTRACTOR SHALL FIELD COORDINATE WITH ELECTRICAL CONTRACTOR FOR ALL POWER REQUIREMENTS.

E. ALL CONTRACTORS SHALL REVIEW A COMPLETE SET OF CONSTRUCTION DOCUMENTS AND COOPERATE WITH THE OTHER TRADES SO THAT THE INSTALLATION OF ALL EQUIPMENT MAY BE PROPERLY COORDINATED.

F. ALL EQUIPMENT FURNISHED SHALL FIT THE SPACE AVAILABLE WITH CONNECTIONS IN THE REQUIRED LOCATIONS AND WITH ADEQUATE SPACE FOR OPERATING AND SERVICING. THE DRAWINGS ARE GENERALLY DIAGRAMMATIC AND INDICATE THE INTENT OF THE INSTALLATION WHILE THE SPECIFICATIONS AND EQUIPMENT LIST DENOTE THE TYPE AND QUALITY OF MATERIAL AND WORKMANSHIP TO BE USED. THE DRAWINGS SHALL NOT BE SCALED FOR EXACT MEASUREMENTS. WHERE A CONFLICT EXISTS BETWEEN THE DRAWINGS AND THE SPECIFICATIONS, THE HIGHER AND/OR MORE COSTLY STANDARD WILL APPLY. THE CONTRACTOR SHALL PROMPTLY NOTIFY THE ENGINEER WHOSE DECISION SHALL BE FINAL. NO ALLOWANCE WILL BE MADE SUBSEQUENTLY IN THIS REGARD ON BEHALF OF THE CONTRACTOR AFTER AWARD OF THE CONTRACT.

G. COORDINATE DUCT ROUTING AND HEIGHTS WITH GENERAL CONTRACTOR. VERIFY ALL CLEARANCES BEFORE STARTING WORK.

H. THE CONTRACTOR SHALL INSTALL ALL PIPING, DUCTWORK AND EQUIPMENT AS REQUIRED TO CONFORM TO THE STRUCTURE, AVOID OBSTRUCTIONS, PRESERVE CEILING HEIGHTS AND HEADROOM AND MAKE ALL EQUIPMENT REQUIRING MAINTENANCE OR REPAIR ACCESSIBLE.

I. ALL DUCT CONNECTIONS TO HVAC EQUIPMENT MUST BE MADE WITH FLEXIBLE CONNECTORS.

J. DO NOT ATTACH ANYTHING TO DECK ABOVE. ATTACH TO STRUCTURE (i.e. BEAMS, JOISTS) ONLY. DUCT HANGERS SHALL BE INSTALLED IN ACCORDANCE WITH LOCAL CODE. ALL CONNECTIONS TO JOISTS SHALL BE MADE AT THE TOP CORD.

K. ALL DUCT DIMENSIONS INDICATED ARE CLEAR INSIDE DIMENSIONS. ALL SUPPLY AND UNTEMPERED OUTDOOR AIR DUCTWORK SHALL BE LINED WITH 1-1/2" ACOUSTICAL DUCT LINER OR WRAPPED WITH 2" THICK FIRE RETARDANT FIBERGLASS WITH A REINFORCED ALUMINUM FOIL JACKET AND SHALL BE APPROVED FOR USE BY SMACNA AND NAIMA. RETURN AIR TRANSFER DUCTS AND RETURN DUCTWORK WITHIN 10 FEET OF THE UNIT FAN SHALL BE LINED WITH 1" ACOUSTICAL DUCT LINER.

L. EXPOSED SPIRAL DUCT TO BE GALVANIZED FINISH, FREE FROM SCRATCHES, DENTS OR BLEMISHES AND PAINTED TO MATCH THE SURROUNDING AREA. DUCT SHALL BE INTERNALLY LINED AND SEALED WITH DUCT SEALER COMPLETELY CONCEALED WITHIN THE DUCT JOINT. NO EXPOSED SEALER OR TAPE WILL BE ACCEPTED.

M. ALL EXPOSED DUCTWORK SHALL BE INSTALLED THRU JOIST SPACE.

N. PROVIDE REMOTE VOLUME DAMPER CONTROL MANUFACTURED BY YOUNG REGULATOR OR UNITED ENERTECH FOR DAMPERS LOCATED ABOVE INACCESSIBLE CEILINGS. LOCATE CONTROLLER ABOVE ACCESSIBLE CEILING LOCATION.

O. TENANT'S CONTRACTOR SHALL BE RESPONSIBLE FOR THE FIELD VERIFICATION OF ALL UTILITY RUNS AND/OR OTHER IMPROVEMENTS LOCATED ON THE PREMISES PRIOR TO BIDDING. TENANT'S CONTRACTOR SHALL ALSO BE RESPONSIBLE FOR ALL COSTS RELATING TO THE RELOCATION OF, DAMAGE TO, REPAIR OF ANY EXISTING UTILITY RUNS AND/OR IMPROVEMENTS WHICH ARE DAMAGED AS A RESULT OF TENANT'S WORK IN OR AROUND THE PREMISES.

P. ROOF MOUNTED EQUIPMENT SHALL BE LABELED WITH THE TENANT NAME AND SPACE NUMBER WITH 3" HIGH WEATHER PROOF LETTERS.

Q. ALL GREASE EXHAUST DUCTWORK SHALL BE PROVIDED WITH 3" FOIL FACED THERMAL-CERAMIC INSULATION FOR GREASE DUCTS. INSULATION SHALL MEET NFPA 96 AND ASTM E 2336 REQUIREMENTS.

R. GREASE DUCT LEAKAGE TESTING MUST BE PERFORMED PRIOR TO CONCEALMENT OF THE DUCTWORK.

S. MECHANICAL CONTRACTOR SHALL PROVIDE TENANT WITH A WRITTEN ONE (1) YEAR MANUFACTURER'S WARRANTY ON ALL HVAC EQUIPMENT PROVIDED AND / OR INSTALLED. THE WARRANTY SHALL INCLUDE ALL LABOR, MATERIALS AND THREE (3) ROUTINE SERVICES INCLUDING FILTER CHANGES DURING A ONE (1) YEAR PERIOD.

T. AT THE COMPLETION OF CONSTRUCTION AN NEBB, AABC OR TABB CERTIFIED AIR BALANCE REPORT SHALL BE SUBMITTED TO THE ENGINEER AND LANDLORD. THE BALANCING MUST BE COMPLETED BY AN INDEPENDENT, THIRD PARTY CONTRACTOR WITH NO TIES TO THE INSTALLING CONTRACTORS.

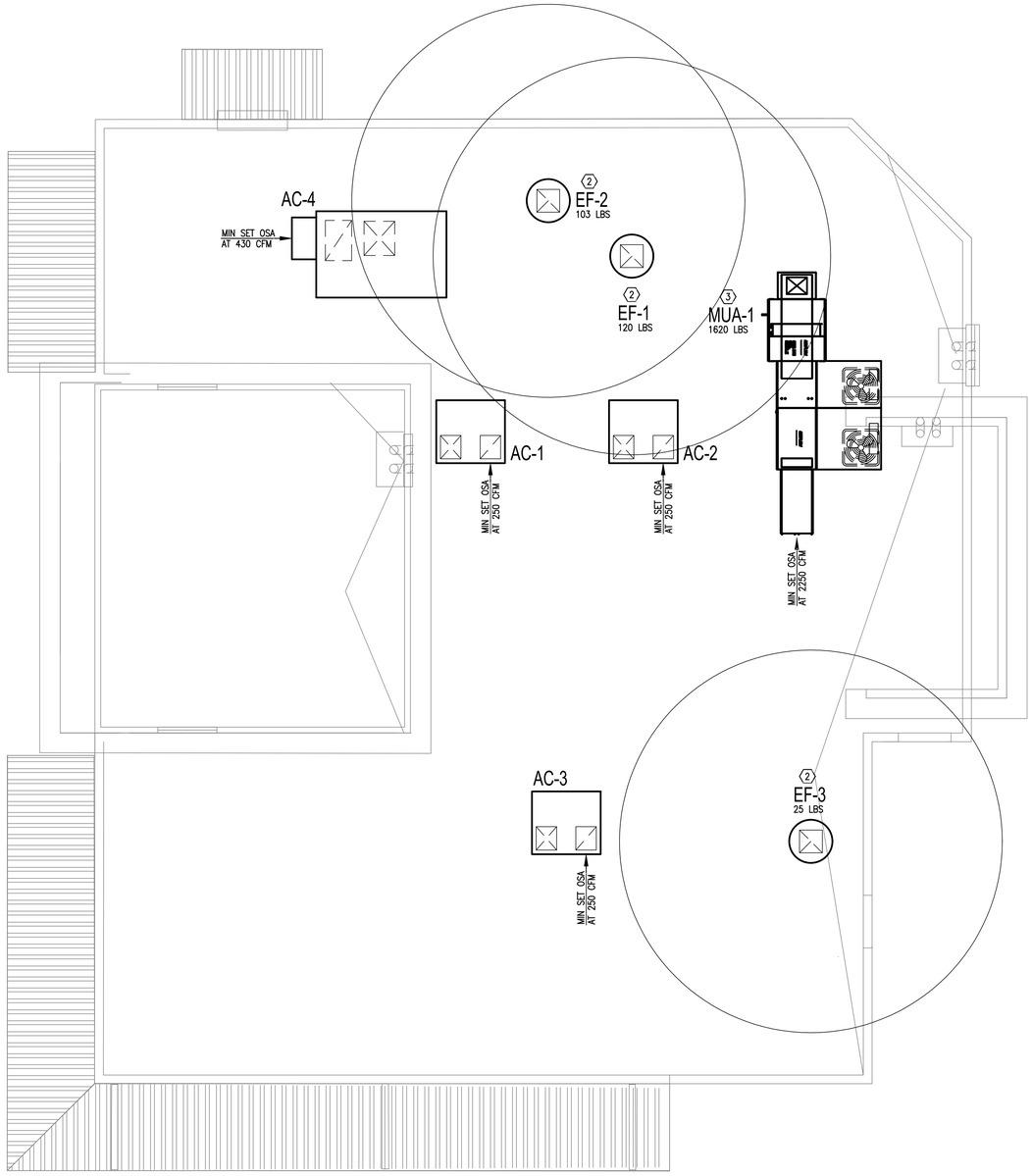

N

MECHANICAL ROOF PLAN

1/4"

PAUL DHANENS • ARCHITECT

ARCHITECT

LICENSED ARCHITECT
PAUL DHANENS
NO. C-23843
RENEWAL
STATE OF CALIFORNIA

5100 CALIFORNIA AVE., SUITE 107
BAKERSFIELD, CALIFORNIA 93309
TELEPHONE: (661) 326-8336
FACSIMILE: (661) 326-8337

CONSULTANT

COPYRIGHT

PAUL DHANENS ARCHITECT expressly reserves its copyright and other property rights in these documents which are not to be reproduced, changed or copied in any written, graphic, electronic or mechanical form, nor assigned to any third party without the expressed written consent of PAUL DHANENS ARCHITECT.

NOTICE TO CONTRACTORS
Written dimensions on these drawings shall take precedence over scaled dimensions. Contractors shall verify and be responsible for confirming all dimensions and shall notify the architect immediately of any descripancies or field variations discovered.

PROJECT

TENANT IMPROVEMENT FOR

FAMOUS FOR Steak 'n Shake STEAKBURGERS

1966 WEST AVE L
LANCASTER, CA

DATE	ISSUED FOR
9-24-18	BUILDING DEPT SUBMITTAL
6-26-19	

NO.	REVISIONS
△	
△	
△	
△	

MECHANICAL

FILE NAME: 2366A2-0

SHEET

M-102

AIR BALANCE SCHEDULE

SUPPLY AIR UNIT	OUTSIDE AIRFLOW (CFM)	RETURN AIRFLOW (CFM)	SUPPLY AIRFLOW (CFM)	OA/SA %	EXHAUST AIR UNIT	EXHAUST AIRFLOW (CFM)	REMARKS
RTU–1	430	2570	3000	14	EF–1	1812	
EXISTING AC UNITS	750	2850	3600	20	EF–2	900	
MAU–1	2250	0	2250	100.0	EF–3	350	
TOTAL	3430	5420	8850	39	TOTAL	3062	
					RESULTING BUILDING PRESSURIZATION	368 CFM	
					PRESSURIZATION PERCENTAGE	3.59	

AIR CURTAINS

MARK	LENGTH	CFM	MOTOR		HTG. MEDIA	MBH	KW	TEMP. RISE	ELECTRICAL				MARS MODEL NUMBER
			QUAN.	H.P.					VOLTS	PH	MCA	MOCP	
AC–1	36"	1379	1	1/2	ELEC.	41	12	27	208	3	––	––	STD236–1EEH–0B
AC–2	25"	625	1	1/6	ELEC.	20.1	6.1	31	208	1	––	––	LPV225–1EBC–0B

OPTIONS:
1. AUTOMATIC DOOR SWITCH.
2. UNIT MTG CONTROL PANEL.
3. THERMOSTAT CONTROL.
4. ON–OFF SWITCH.

DIFFUSERS, GRILLES AND REGISTERS

MARK	SERVICE	LOCATION	CLG. TYPE	MANUFAC.	CATALOG NUMBER	REMARKS
D–1	SUPPLY	CEILING	AC TILE	TITUS	TMSA XX 24x24 3 26 [1]	SEE PLAN FOR NECK SIZE
D–2	SUPPLY	CEILING	GYP. BD.	TITUS	TMSA XX 12x12 3 26 [1–2]	SEE PLAN FOR NECK SIZE
D–3	SUPPLY	CEILING	AC TILE	TITUS	PAR XX 24x24 3 [1]	SEE PLAN FOR NECK SIZE
D–4	SUPPLY	DUCT	N/A	TITUS	TMRA XX 26 [1]	SEE PLAN FOR NECK SIZE
G–1	RETURN	CEILING	AC TILE	TITUS	50F X X 24x24 3 26 [1,3]	SEE PLAN FOR SIZE
G–2	EXHAUST	CEILING	GYP. BD.	TITUS	50F X X 12x12 3 26 [1–3]	SEE PLAN FOR SIZE

NOTES:
1. TITUS IS THE BASE OF DESIGN. KRUEGER, PRICE AND CARNES ARE EQUAL. NO EXCEPTIONS.
2. PROVIDE WITH MODEL TRM FRAME.
3. PROVIDE 1/2" X 1/2" X 1" CORE.

MAKE–UP AIR UNITS

MARK	CLG. CAP. (MBH)			COMP. KW	HTG CAP. (MBH)		CFM	EXT. S.P.	FAN HP	ELECTRICAL				WEIGHT (LBS)	SEER/ EER	REF. TYPE	CAPTIVEAIRE MODEL NUMBER
	SENS.	TOTAL	NOM. TONS		INPUT	OUTPUT				VOLTS	PH	MCA	MOCP				
MAU–1	––	––	5.0	––	184.9	170.1	2250	0.75	2.0	208	3	––	––	1544	14	R410A	SEE CAPTIVEAIRE DRAWINGS

NOTES:
1. PROVIDE ELECTRICAL INTERLOCK WITH EXHAUST FANS 1 AND 2.
2. SEE CAPTIVEAIRE PLANS FOR INFORMATION.

EXHAUST FANS

MARK	LOCATION	SERVICE	CFM	EXT. S.P. (IN W.G.)	SONES	MOTOR DATA				RPM	MFR.	REMARKS
						HP	VOLTS	PH	CYC.			
EF–1	ROOF	HOOD–1	1812	1.0	15.2	0.75	208	3	60	1336	CAPTIVEAIRE	SEE CA DRAWINGS
EF–2	ROOF	HOOD–2	900	1.0	14.4	0.5	208	3	60	1422	CAPTIVEAIRE	SEE CA DRAWINGS
EF–3	ROOF	RESTROOMS	350	0.5	7.7	0.07	115	1	60	1550	GREENHECK	G–090–D

NOTES:
1. PROVIDE ELECTRICAL INTERLOCK WITH MAU–1.
2. PROVIDE MINIMUM 12" HEIGHT ROOF CURB.

ROOF TOP UNITS

MARK	CLG. CAP. (MBH)			COMP. KW	HTG CAP. (MBH)		CFM	EXT. S.P.	FAN HP	ELECTRICAL				WEIGHT (LBS)	SEER/ EER	REF. TYPE	MODEL NUMBER
	SENS.	TOTAL	NOM. TONS		INPUT	OUTPUT				VOLTS	PH	MCA	MOCP				
AC–1	–	–	3	–	–	–	1200	0.5	–	208	1	–	–	–	–	R410A	EXISTING (3)TON
AC–2	–	–	3	–	–	–	1200	0.5	–	208	1	–	–	–	–	R410A	EXISTING (3)TON
AC–3	–	–	3	–	–	–	1200	0.5	–	208	1	–	–	–	–	R410A	EXISTING (3)TON
AC–4	90	75	7.5	–	120	96	3000	0.5	2.0	208	3	43.5	50	–	12.5	R410A	YORK ZH09010

COOLING CAPACITIES BASED ON ARI STANDARD 210/240 OR 340/360: 80° F DB/ 67° F WB INDOOR ENTERING AIR TEMPERATURE, 95° F DB AIR ENTERING OUTDOOR FAN. SCHEDULED UNIT CFM MAY DIFFER FROM ARI STANDARD CFM.

NOTES:
1. NOT USED
2. PROVIDE WITH FACTORY INSTALLED DISCONNECT, UNPOWERED CONVENIENCE OUTLET, THROUGH THE BASE CONNECTIONS.
3. PROVIDE WITH 14" HEIGHT ROOF CURB.
4. PROVIDE WITH DRY BULB ECONOMIZER AND BAROMETRIC RELIEF DAMPER.
5. PROVIDE WITH DRY BULB ECONOMIZER AND POWER EXHAUST.
6. PROVIDE WITH WATER LEVEL MONITORING DEVICE IN DRAIN PAN TO SHUT OFF UNIT IF THE DRAIN LINE BECOMES RESTRICTED.
7. PROVIDE WITH CONDENSER COIL HAIL GUARD.
8. PROVIDE WITH HUMIDITY CONTROL.

PAUL DHANENS • ARCHITECT

ARCHITECT

REGISTERED ARCHITECT PAUL DHANENS NO. C–23843 RENEWAL STATE OF CALIFORNIA

5100 CALIFORNIA AVE., SUITE 107
BAKERSFIELD, CALIFORNIA 93309
TELEPHONE: (661) 326–8336
FACSIMILE: (661) 326–8337

CONSULTANT

COPYRIGHT

PAUL DHANENS ARCHITECT expressly reserves its copyright and other property rights in these documents which are not to be reproduced, changed or copied in any written, graphic or electronic form, nor assigned to any third party without the expressed written consent of PAUL DHANENS ARCHITECT.

NOTICE TO CONTRACTORS
Written dimensions on these drawings shall take precedence over scaled dimensions. Contractors shall verify and be responsible for confirming all dimensions and shall notify the architect immediately of any descripancies or field variations discovered.

PROJECT

TENANT IMPROVEMENT FOR

FAMOUS FOR Steak 'n Shake STEAKBURGERS

1966 WEST AVE L
LANCASTER, CA

DATE	ISSUED FOR
9–24–18	BUILDING DEPT SUBMITTAL
6–26–19	

NO.	REVISIONS
△	
△	
△	
△	

MECHANICAL

FILE NAME: 2366A2-0

SHEET

M-201

SECTION 230000 – HVAC GENERAL CONDITIONS

PART 1 GENERAL

1.01 APPLICABILITY
- A. This section supplements all sections of the Specifications for Division 23 and shall apply to all phases of work hereinafter specified, shown on the Drawings, or required to provide a complete installation of approved HVAC systems.

1.02 DEFINITIONS
- A. "Work" is hereby defined as, "The construction and services required by the Contract Documents whether completed or partially completed and includes all labor, materials, equipment, and services provided or to be provided by the Contractor to fulfill the Contractor's obligations. The work may constitute the whole or a part of the project."
- B. "Furnish" is hereby defined as, "To supply and deliver, unload, and inspect for damage."
- C. "Install" is hereby defined as, "To unpack, assemble, erect, apply, place, finish, cure, protect, clean, connect, and place into operation into the work."
- D. "Provide" is hereby defined as, "To furnish and install."
- E. "Connect" is hereby defined as, "To bring service to the equipment and make final attachment including necessary ductwork, piping, wiring, etc."
- F. "Concealed" is hereby defined as, "Hidden from sight in chases, furred spaces, shafts, hung ceilings, embedded in construction, in crawl spaces, or buried."
- G. "Exposed" is hereby defined as, "Not installed underground nor concealed as defined by the Specifications."
- H. "Drawings" is hereby defined as, "All plans, details, equipment schedules, diagrams, sketches, etc. issued for the construction of the work."

1.03 CODES AND STANDARDS
- A. Perform work in accordance with the applicable Building Code, Electrical Code, Fire Code, Mechanical Code, Plumbing Code, Energy Code, and all other applicable codes, amendments, and ordinances. Also perform all work in accordance with the Americans with Disabilities Act (ADA) and the Authority Having Jurisdiction (AHJ) including Fire Marshal(s).
- B. Perform work in accordance with Landlord requirements, including any Tenant Criteria Manuals and Lease Exhibits, where applicable.
- C. Perform work in accordance with the applicable utility companies serving the project. Make all arrangements with the utility companies for proper coordination of the work.
- D. Recognized Standards: Design, manufacture, testing and method of installation of all apparatus and materials furnished under the requirements of these Specifications shall conform to the latest publications or standard rules of Underwriters Laboratories, Inc. (U.L.), American Society for Testing and Materials (ASTM), American National Standards Institute (ANSI), and National Electrical Code (NEC), National Fire Protection Association (NFPA), American Society of Heating, Refrigerating and Air-Conditioning Engineers (ASHRAE), and the Sheet Metal and Air Conditioning Contractors' National Association (SMACNA).
- E. The Contract Documents shall take precedence where the Contract Documents exceed code, Landlord, utility, or recognized standards requirements.

1.04 PERMITS AND FEES
- A. Permits, licenses, fees, inspections and arrangements required for the work under this Contract shall be obtained by the Contractor at his expense, unless otherwise indicated.

1.05 CONTRACT DRAWINGS
- A. The Contractor is responsible to obtain, fully understand, and coordinate the work with the complete set of Contract Documents. Any required corrections, including all associated costs, arising from issues caused by the Contractor's failure to understand and/or coordinate the work with the complete set of Contract Documents are the Contractor's sole responsibility.
- B. Work under these sections is diagrammatic unless indicated otherwise and is intended to convey the scope of work and indicate the general arrangement of ductwork, piping, equipment, and accessories. Follow these drawings in laying out the work and verify spaces for the installation of these materials and equipment. Wherever a question exists as to the exact intended location of ductwork, piping, or equipment, obtain instructions from the Architect before proceeding with the work.
- C. Notify the Architect for resolution if a discrepancy is discovered within the Contract Documents. Failure of the Contractor to notify the Architect of discrepancies shall result in the resolution becoming the Contractor's responsibility and subject to the Architect's review and possible rejection. Should the Architect reject a discrepancy resolution of which they were not notified, the Contractor is fully responsible to correct the installation, including all associated costs, until approval of the installation is given by the Architect.

1.06 EXISTING CONDITIONS
- A. Verify all existing conditions prior to beginning work.
- B. Any existing conditions indicated in the Contract Documents are based on information drawings provided by others and possibly limited field verification. The Contractor shall adjust for actual field conditions at no additional expense to the Owner.
- C. The Contractor shall visit the project site, review existing conditions against the Contract Documents, and familiarize himself with the work prior to bidding and start of the work. By signing the Contract, the Contractor acknowledges the site visit has been completed and the existing conditions are accepted.
- D. The Contractor shall notify the Architect of major discrepancies in writing so the appropriate modifications to the design can be made without delay to the project. The Contractor assumes full responsibility of adjusting for discrepancies of which the Architect is not informed.

1.07 SUBMITTALS
- A. Shop Drawings:
  1. Furnish the Architect shop drawing portfolios containing names of manufacturer and cut sheets of equipment to be used on the project. Use manufacturer's specification sheets identified by number indicated on drawings or schedules. Indicate catalog number on the cut sheets. As applicable, provide construction data, weight and dimensional data, voltage ratings, performance data, listing data, pump curves, fan curves and sound data as part of the shop drawing submittal.
  2. Submittals are reviewed only for general compliance with the Contract Documents. Dimensions, quantities and details are not checked during submittal review. Review of the submittals does not relieve the Contractor of the responsibility for providing all materials, equipment and accessories necessary for a complete and operational system meeting the requirements of the project and the intent of the Contract Documents. The responsibility for coordination of substituted materials and equipment lies solely with the substituting Contractor.
  3. Electrical Characteristics: Verify that proper power supply is available prior to ordering equipment. Verify proper voltage, phase and current rating of power supply and inform Engineer of any deviations prior to order, connection of equipment or start-up. Responsibility for verification of proper power supply voltage and any product returns or damage resulting from incorrect connections shall rest with this Contractor.
- B. Project Record Documents: Provide as specified.
- C. Operation and Maintenance Data: Include manufacturer's descriptive literature, operating instructions, installation instructions, maintenance and repair data, and parts listing.
- D. Test Reports: Provide as specified.

1.08 QUALITY ASSURANCE
- A. Manufacturer Qualifications: Company specializing in manufacturing the Products specified in this section with minimum five years experience.
- B. Installer Qualifications: Company specializing in performing the work of this section, with minimum five years experience.
- C. Products:
  1. Listed and classified by Underwriters Laboratories Inc. as suitable for the purpose specified and indicated.
- D. All equipment and components shall be free of all rust/corrosion or any visible damage. All items not complying with this requirement shall be replaced without any change in the Contract amount.
- E. Equipment performance and accessories shall be as scheduled on the Drawings and specified herein. Inclusion in both locations is not a prerequisite to inclusion in the Contract. Equipment and accessories specified in either location shall be included in the Contract. Provide all necessary accessories and connections as required for a complete, functional system, including all required components reasonably inferred to as necessary although such components may or may not be specifically indicated in the Contract Documents.
- F. Code or utility company requirements shall supersede any conflicting requirements of this section.

1.09 DELIVERY, STORAGE, AND HANDLING
- A. Rooftop Equipment: Protect units from physical damage by storing off site until roof mounting curbs are in place, ready for immediate installation of units.
- B. Protect insulation from weather and construction traffic, dirt, water, chemical, and mechanical damage, by storing in original wrapping.
- C. Protect dampers and accessories from damage to operating linkages, blades and finishes.
- D. Provide temporary end caps and closures on piping and fittings. Maintain in place until installation.
- E. Protect motors stored on site from weather and moisture by maintaining factory covers and suitable weather-proof covering. For extended outdoor storage, remove motors from equipment and store separately.

1.10 WARRANTY AND GUARANTEE
- A. Submit manufacturer's warranty and ensure forms have been filled out in Owner's name and registered with manufacturer.
- B. Provide one year manufacturer warranty for pumps.
- C. Provide three year manufacturers warranty for solid state ignition modules.
- D. Provide five year manufacturers warranty for compressors, heat exchangers, condensing units, and electronic air cleaners.

PART 2 PRODUCTS

2.01 SUBSTITUTIONS
- A. The manufacturers listed are listed to set minimum standards for quality, design, and functionality. The products of other manufacturers may be submitted, at the Contractor's option, during shop drawing review unless indicated otherwise. The products of other manufacturers shall meet or exceed all requirements of the Contract Documents. The Contractor accepts all responsibility for costs and coordination issues arising out of the substitution of materials or equipment, and the coordination of such substitutions with all other contractors and subcontractors.
- B. The Contractor may use any of the following ductwork, piping or insulation materials at his option, provided the selected material meets with the approval of all State, local authorities and any utility company requirements. Verification of compliance of the selected material is the sole responsibility of the installing Contractor.

PART 3 EXECUTION

3.01 COORDINATION OF WORK
- A. Examine the Contract Documents as a whole for the work of other trades. Coordinate all work accordingly.
- B. Promptly report to the Architect any delay or difficulties encountered in the installation of the work, which might prevent prompt and proper installation, or make it unsuitable to connect with or receive the work of others. Failure to so report shall constitute an acceptance of the work of other trades as being fit and proper for the execution of this work.
- C. Plan, lay out, and coordinate the work with all trades well enough in advance so that it proceeds with a minimum of interference to work that has not been completed and work that is in progress. Inform all trades of openings required for the work and provide all special frames, sleeves, and anchor bolts required. The HVAC system layout may be altered to suit the conditions with engineer approval, prior to the installation of any work and without additional cost to the Owner. Conflicts arising from lack of coordination shall be this Contractor's responsibility.
- D. Perform all work in conformity with the Contract Documents and afford other trades reasonable opportunity for the execution of their work. Properly connect and coordinate this work with the work of other trades at such time and in such a manner as not to delay or interfere with their work.
- E. All roofing penetrations shall be flashed and weather sealed by the roofing manufacturer's authorized roofing contractor at this Contractor's expense. This Contractor shall contract with the factory authorized roofing contractor for the specific roofing system applicable to this Project. The use of an unauthorized roofing contractor may result in removal and replacement of the penetration systems at this Contractor's expense.
- F. All temperature control wiring, thermostat wiring, damper interlock wiring, control panel interlock wiring and miscellaneous low voltage wiring associated with the equipment furnished or installed under this contract shall be furnished and installed by the mechanical contractor or his sub-contractor. All wiring installed under this contract shall be in full compliance with the National Electrical Code, all State and local codes and requirements of the Electrical Specifications for this project.

3.02 EXAMINATION
- A. Verify field measurements are as indicated on the Drawings.
- B. Verify all equipment locations prior to rough-in. Maintain adequate equipment service clearance per manufacturer and code.
- C. Verify routing of all ductwork and piping in field prior to fabrication or installation. Verify adequate clearance with structure, light fixtures, and ceiling heights.
- D. Verify that proper fuel and power supply is available for connection.

3.03 INTERFACE WITH OTHER PRODUCTS
- A. Install all ductwork, pipe, equipment, and accessories to preserve fire resistance rating of partitions and other elements, using materials and methods specified.

3.04 FIELD QUALITY CONTROL
- A. Provide tests as necessary to establish the adequacy, quality, safety, completed status, and suitable operation of each system. Tests shall be conducted under the supervision of the Architect.

3.05 CLEANING AND REPAIR
- A. Clean fire suppression parts to remove harmful materials.
- B. Clean exposed surfaces of all ductwork pipe, equipment, and accessories of all dirt, debris, splatter, and other deleterious materials. Follow the manufacturer's recommendations for cleaning as applicable.
- C. Repair or replace damaged ductwork, pipe, equipment, and accessories, as directed by and to the satisfaction of the Architect, where marring or disfigurement has occurred. All pipe, equipment, and accessories shall be new.

3.06 PROJECT CLOSEOUT
- A. Project Record Documents: At project closeout, provide one printed copy and one electronic copy of project record drawings to the Owner. Information contained on project record drawings shall include, as a minimum:
  1. Actual locations of all equipment, ductwork, air inlets/outlets, accessories, etc.
  2. Actual routing of ductwork with sizes and elevations.
  3. Actual locations of control devices including valves and volume dampers.
- B. Operation and Maintenance Data: At project closeout, submit to the Architect two copies of descriptive literature, maintenance and operation data for all hvac equipment, control systems, accessories, and materials used. Include maintenance procedures, intervals, and parts list of each item installed under this contract. Include all manufacturer's guarantees and warranties.
- C. Maintenance Materials: At project closeout, furnish to the Owner the following:
  1. One set of replacement filters for all hvac equipment.
  2. The maintenance contract for the hvac system, if applicable.
- D. Test Reports: At project closeout, submit to the Architect two copies of the following:
  1. Testing, Adjusting and Balancing Report

END OF SECTION

SECTION 230548 – VIBRATION AND SEISMIC CONTROLS FOR HVAC PIPING AND EQUIPMENT

PART 1 GENERAL

1.01 SECTION INCLUDES
- A. Vibration isolators.
- B. Seismic restraints.
- C. Equipment:
  1. Fans, axial and centrifugal
  2. Packaged roof top equipment

1.02 SUBMITTALS
- A. Product Data: Provide schedule of vibration isolator type with location and load on each.

PART 2 PRODUCTS

2.01 MANUFACTURERS
- A. Isolation Technology, Inc.; Kinetics Noise Control, Inc.; Mason Industries.

2.02 VIBRATION ISOLATORS
- A. Restrained Open Spring Isolators:
  1. Springs: Minimum horizontal stiffness equal to 75 percent vertical stiffness, with working deflection between 0.3 and 0.6 of maximum deflection. Color code springs for load carrying capacity.
  2. Spring Mounts: Provide with leveling devices, minimum 0.25 inch thick neoprene sound pads, and zinc chromate plated hardware.
  3. Sound Pads: Size for minimum deflection of 0.05 inch; meet requirements for neoprene pad isolators.
  4. Restraint: Provide heavy mounting frame and limit stops.
  5. For Exterior and Humid Areas: Hot dipped galvanized housings and neoprene coated springs.
- B. Spring Hanger:
  1. Springs: Minimum horizontal stiffness equal to 75 percent vertical stiffness, with working deflection between 0.3 and 0.6 of maximum deflection. Color code springs for load carrying capacity.
  2. Housings: Incorporate neoprene isolation pad meeting requirements for neoprene pad isolators or rubber hanger with threaded insert.
  3. Misalignment: Capable of 20 degree hanger rod misalignment.
  4. For Exterior and Humid Areas: Hot dipped galvanized housings and neoprene coated springs.
- C. Neoprene Pad Isolators:
  1. Rubber or neoprene waffle pads.
     - a. Hardness: 30 durometer.
     - b. Thickness: Minimum 1/2 inch.
     - c. Maximum Loading: 50 psi.
     - d. Rib Height: Maximum 0.7 times width.
  2. Configuration: Single layer.
- D. Rubber Mount or Hanger: Molded rubber designed for 0.4 inch deflection with threaded insert.
- E. Glass Fiber Pads: Neoprene jacketed pre-compressed molded glass fiber.

2.03 SEISMIC RESTRAINTS
- A. Type: Non-directional and double acting unit consisting of interlocking steel members restrained by neoprene elements.
- B. Elements: Replaceable neoprene, minimum of 0.75 inch thick with minimum 1/8 inch air gap.
- C. Capacity: 4 times load assigned to mount groupings at 0.4 inch deflection.
- D. Attachment Points and Fasteners: Capable of withstanding 3 times rated load capacity of seismic snubber.

PART 3 EXECUTION

3.01 INSTALLATION
- A. Install in accordance with manufacturer's instructions.
- B. On closed spring isolators, adjust so side stabilizers are clear under normal operating conditions.
- C. Prior to making piping connections to equipment with operating weights substantially different from installed weights, block up equipment with temporary shims to final height. When full load is applied, adjust isolators to load to allow shim removal.
- D. Support piping connections to equipment mounted on isolators using isolators or resilient hangers to nearest flexible pipe connector.
- E. Provide flexible connections on all piping and ductwork connections to equipment. Refer to other sections of this Specification for the acceptable types of flexible connectors to be used.
- F. Selection of type, thickness and deflection of vibration isolation shall be by the vibration control manufacturer based on the specific equipment type and size, as scheduled on the Drawings and indicated below.

3.02 SCHEDULES
- A. Equipment Isolation Schedule: (Minimum deflection as sized by the isolation equipment manufacturer.)
  1. Fans, axial and centrifugal.
     - a. Small fans up to 22" diameter wheel:
       - 1) Rubber Mount or Hanger
  2. Packaged roof top equipment.
     - a. Above grade roof structures:
       - 1) Base: Roof Curb.
       - 2) Isolation: Full perimeter Neoprene Pad between curb and units. Provide restrained spring vibration isolation curbs when indicated on the Drawings.

END OF SECTION

SECTION 230593 – TESTING, ADJUSTING, AND BALANCING FOR HVAC

PART 1 GENERAL

1.01 SECTION INCLUDES
- A. Testing, adjustment, and balancing of air systems.
  1. Air handling units; Packaged heating and/or cooling equipment; Fans. (Exhaust and supply); Coils; Terminal equipment; Air inlets and outlets. (Diffusers, grilles, louvers, etc.)
- B. Measurement of final operating condition of HVAC systems.
- C. Independent agency requirements.

1.02 SUBMITTALS
- A. Qualifications: Submit name of adjusting and balancing agency and TAB supervisor for approval within 30 days after award of Contract. Provide TAB Agency qualifications.
- B. Final Report: Indicate deficiencies in systems that would prevent proper testing, adjusting, and balancing of systems and equipment to achieve specified performance.
  1. Submit to the Construction Manager within two weeks after completion of testing, adjusting, and balancing.
  2. Provide reports in bound manuals, complete with index page and indexing tabs, with cover identification at front and side. Include set of reduced drawings with air outlets and equipment identified to correspond with data sheets, and indicating thermostat and equipment locations.
  3. Include actual instrument list, with manufacturer name, serial number, and date of calibration.
  4. Form of Test Reports: Where the TAB standard being followed recommends a report format use that; otherwise, follow ASHRAE Std 111.
  5. Include the following on the title page of each report:
     - a. Name, address and telephone number of Testing, Adjusting, and Balancing Agency.
     - b. Project: Name; location; Engineer; Contractor, Report date.

1.03 WARRANTY
- A. The Balancing Contractor shall be prepared to return to the site at no additional cost to re-adjust air quantities as required to provide uniform temperatures, eliminate drafts and objectionable noises during the first year of occupancy, including one full heating and one full cooling season, after the acceptance of the final balancing report.

PART 2 PRODUCTS – NOT USED

PART 3 EXECUTION

3.01 GENERAL REQUIREMENTS
- A. Perform total system balance in accordance with one of the following:
  1. AABC MN-1, AABC National Standards for Total System Balance.
  2. ASHRAE Std 111, Practices for Measurement, Testing, Adjusting and Balancing of Building Heating, Ventilation, Air-Conditioning, and Refrigeration Systems.
  3. NEBB Procedural Standards for Testing Adjusting Balancing of Environmental Systems.
  4. SMACNA HVAC Systems Testing, Adjusting, and Balancing.
- B. Begin work after completion of systems to be tested, adjusted, or balanced and complete work prior to Substantial Completion of the Project.
- C. Where HVAC systems and/or components interface with life safety systems, including fire and smoke detection, alarm, and control, coordinate scheduling and testing and inspection procedures with the authorities having jurisdiction.
- D. TAB Agency Qualifications:
  1. Company specializing in the testing, adjusting, and balancing of systems specified in this Section with a minimum of five years experience.
  2. Certified by one of the following:
     - a. AABC, Associated Air Balance Council; upon completion submit AABC National Performance Guaranty.
     - b. NEBB, National Environmental Balancing Bureau.
     - c. TABB, The Testing, Adjusting, and Balancing Bureau of National Energy Management Institute.
  3. The TAB Agency must be a completely independent, third party balancing contractor with no financial, common owners or other ties to the installing contractors.
- E. TAB Supervisor and Technician Qualifications: Certified by same organization as TAB agency.

3.02 ADJUSTMENT TOLERANCES
- A. Air Handling Systems; Air Outlets and Inlets; Hydronic Systems: Adjust to within plus or minus 15 percent of design.

3.03 RECORDING AND ADJUSTING
- A. Permanently mark settings of valves, dampers, and other adjustment devices allowing settings to be restored. Set and lock memory stops.
- B. Mark on the Drawings the locations where traverse and other critical measurements were taken and cross reference the location in the final report.

3.04 AIR SYSTEM PROCEDURE
- A. Adjust air handling and distribution systems to provide required or design supply, return, and exhaust air quantities.
- B. Make air quantity measurements in ducts by Pitot tube traverse of entire cross sectional area of duct.
- C. Measure air quantities at air inlets and outlets.
- D. Adjust distribution system to obtain uniform space temperatures free from objectionable drafts and noise.
- E. Use volume control devices to regulate air quantities only to extend that adjustments do not create objectionable air motion or sound levels. Effect volume control by duct internal devices such as dampers and splitters. Do not use diffuser, grille or register integral dampers for balancing adjustments unless the plans do not indicate duct mounted devices.
- F. Vary total system air quantities by adjustment of fan speeds. Provide drive changes required at no additional expense to the Owner. Vary branch air quantities by damper regulation.
- G. Measure static air pressure conditions on air supply units, including filter and coil pressure drops, and total pressure across the fan. Make allowances for 50 percent loading of filters.
- H. Adjust outside air automatic dampers, outside air, return air, and exhaust dampers for design conditions in all operating modes as indicated in the sequence of control.
- I. Measure temperature conditions across outside air, return air, and exhaust dampers to check leakage.
- J. Where modulating dampers are provided, take measurements and balance at extreme conditions and at all intermediate operating conditions specified in the sequence of control. Balance variable volume systems at maximum air flow rate, full cooling, and at minimum air flow rate, full heating.

3.05 SCOPE
- A. Equipment Requiring Testing, Adjusting, and Balancing (if present on the project):
  1. HVAC Pumps; Boilers; All Air Handling Equipment; All Packaged Heating and/or Cooling Equipment; All Coil; All Heat Exchangers; Terminal Heat Transfer Units; Air Terminal Units; Air Inlets and Outlets

3.06 MINIMUM DATA TO BE REPORTED
- A. Report (as applicable to the project):
  1. Summary Comments:
     - a. Design versus final performance
     - b. Notable characteristics of system
     - c. Summary of outdoor and exhaust flows to indicate amount of building pressurization
     - d. Nomenclature used throughout report and test conditions.
- B. Electric Motors and drives:
  1. Manufacturer; Model/Frame; HP/BHP; Phase, voltage, amperage; nameplate, actual, no load; RPM; Service factor; Sheave Make/Size/Bore.
  2. V-Belt Drives: Identification/location; Required driven RPM; Driven sheave, diameter and RPM; Belt, size and quantity;
- C. Cooling and Heating Coils:
  1. Identification/number; Manufacturer
  2. Air flow, design and actual
  3. Air pressure drop, design and actual
  4. Entering and leaving air DB and WB temperature, design and actual
  5. Water flow, design and actual (if applicable)
  6. Water pressure drop, design and actual (if applicable)
  7. Entering and leaving water temperature, design and actual (if applicable)
- D. Air Moving Equipment:
  1. Manufacturer; Model number; Serial number; Arrangement/Class/Discharge
  2. Air flow, specified and actual
  3. Inlet; Discharge; Total static pressure (total external), specified and actual
- E. Air Distribution Tests:
  1. Air terminal number
  2. Room number/location
  3. Terminal type
  4. Terminal size
  5. Area factor
  6. Design velocity
  7. Design air flow
  8. Test (final) velocity
  9. Test (final) air flow
  10. Percent of design air flow

END OF SECTION

SECTION 230713 – DUCT INSULATION

PART 1 GENERAL

1.01 SECTION INCLUDES
- A. Duct insulation.
- B. Duct liner.
- C. Insulation jackets.
- D. Supply, return or exhaust ducts in ceiling spaces.
- E. Supply, return or exhaust ducts in interior unconditioned areas.
- F. Supply, return or exhaust ducts in exposed locations.

1.02 FIELD CONDITIONS
- A. Maintain ambient temperatures and conditions required by manufacturers of adhesives, mastics, and insulation cements.
- B. Maintain temperature during and after installation for minimum period of 24 hours.

PART 2 PRODUCTS

2.01 REQUIREMENTS FOR ALL PRODUCTS OF THIS SECTION
- A. Surface Burning Characteristics: Flame spread/Smoke developed index of 25/50, maximum, when tested in accordance with ASTM E 84, NFPA 255, or UL 723.
- B. Manufacturer: Knauf Fiber Glass; Johns Manville Corporation; Owens Corning Corp.; CertainTeed Corporation.

2.02 GLASS FIBER, FLEXIBLE
- A. Insulation: ASTM C 553; flexible, noncombustible blanket.
  1. 'K' value: 0.31 at 75 degrees F, when tested in accordance with ASTM C 518.
  2. Maximum Service Temperature: 450 degrees F.
  3. Maximum Water Vapor Sorption: 5.0 percent by weight.
- B. Vapor Barrier Jacket:
  1. Kraft paper with glass fiber yarn and bonded to aluminized film.
  2. Moisture Vapor Permeability: 0.029 ng/Pa s m (0.02 perm inch), when tested in accordance with ASTM E 96/E 96M.
  3. Secure with pressure sensitive tape.
- C. Vapor Barrier Tape:
  1. Kraft paper reinforced with glass fiber yarn and bonded to aluminized film, with pressure sensitive rubber based adhesive.
- D. Outdoor Vapor Barrier Mastic:
  1. Vinyl emulsion type acrylic or mastic, compatible with insulation, black color.
- E. Tie Wire: Annealed steel, 16 gage.

2.03 DUCT LINER
- A. Insulation: Incombustible glass fiber complying with ASTM C 1071; flexible blanket, rigid board, and preformed round liner board; impregnated surface and edges coated with acrylic polymer shown to be fungus and bacteria resistant by testing to ASTM G 21.
  1. Apparent Thermal Conductivity: Maximum of 0.31 at 75 degrees F.
  2. Service Temperature: Up to 250 degrees F.
  3. Rated Velocity on Coated Air Side for Air Erosion: 5,000 fpm, minimum.
  4. Minimum Noise Reduction Coefficients:
     - a. 1/2 inch Thickness: 0.30.
     - b. 1 inch Thickness: 0.45.
     - c. 1-1/2 inches Thickness: 0.60.
     - d. 2 inch Thickness: 0.70.
- B. Adhesive: Waterproof, fire-retardant type.
- C. Liner Fasteners: Galvanized steel, self-adhesive pad or impact applied with integral, or press-on head.

PART 3 EXECUTION

3.01 INSTALLATION
- A. Install in accordance with manufacturer's instructions and NAIMA National Insulation Standards.
- B. Insulated ducts conveying air below ambient temperature:
  1. Provide insulation with vapor barrier jackets.
  2. Finish with tape and vapor barrier jacket.
  3. Continue insulation through walls, sleeves, hangers, and other duct penetrations.
  4. Insulate entire system including fittings, joints, flanges, fire dampers, flexible connections, and expansion joints.
- C. Insulated ducts conveying air above ambient temperature:
  1. Provide with or without standard vapor barrier jacket.
  2. Insulate fittings and joints. Where service access is required, bevel and seal ends of insulation.
- D. External Duct Insulation Application:
  1. Secure insulation with vapor barrier with wires and seal jacket joints with vapor barrier adhesive or tape to match jacket.
  2. Secure insulation without vapor barrier with staples, tape, or wires.
  3. Install without sag on underside of duct. Use adhesive or mechanical fasteners where necessary to prevent sagging. Lift duct off trapeze hangers and insert spacers.
  4. Seal vapor barrier penetrations by mechanical fasteners with vapor barrier adhesive.
  5. Stop and point insulation around access doors and damper operators to allow operation without disturbing wrapping.
- E. Duct and Plenum Liner Application:
  1. Adhere insulation with adhesive for 90 percent coverage.
  2. Secure insulation with mechanical liner fasteners. Refer to SMACNA HVAC Duct Construction Standards – Metal and Flexible for spacing.
  3. Seal and smooth joints. Seal and coat transverse joints.
  4. Seal liner surface penetrations with adhesive.
  5. Duct dimensions indicated are net inside dimensions required for air flow. Increase duct size to allow for insulation thickness.

3.02 SCHEDULES
- A. The Contractor may use any of the following insulating materials, at his option, provided the selected material meets with the approval of all State, local authorities and utility company requirements. Verification of compliance of the selected insulating material and thickness with all State and local codes and utility company requirements is the sole responsibility of the installing Contractor.
- B. Supply air ducts in ceiling spaces:
  1. Flexible Glass Fiber Duct Insulation: 2 inches thick.
  2. Flexible Glass Fiber Duct Liner Insulation: 1-1/2 inches thick.
- C. Supply, return or exhaust air ducts in crawl spaces, attics or other unconditioned areas:
  1. Flexible Glass Fiber Duct Insulation: 3 inches thick.
- D. Supply air ducts exposed in finished areas:
  1. Flexible Glass Fiber Duct Liner Insulation: 1-1/2 inches thick.
- E. Return or exhaust air ducts exposed in finished areas: None.

END OF SECTION

SECTION 230713.13 – GREASE DUCT FIREPROOFING

PART 1 GENERAL

1.01 SECTION INCLUDES
- A. Fire resistant duct wrap for kitchen hood exhaust ventilation ducts (grease ducts).
- B. Firestopping at duct penetrations through fire rated walls and floors.

1.02 SUBMITTALS
- A. Product Data: Manufacturer's data sheets on each product to be used.
- B. Certification: Evidence that the proposed fireproofing and firestopping are acceptable to the authorities having jurisdiction.

PART 2 PRODUCTS

2.01 MANUFACTURERS
- A. Acceptable Manufacturer: 3M Fire Protection Products, Inc.; Unifrax FyreWrap; Morgan Thermal Ceramics.

2.02 MATERIALS
- A. Grease Duct Fireproofing: Material applied directly to metal ducts and achieving two-hour fire rated separation when tested in accordance with UL 2221 or ASTM E2336 by independent testing agency.
  1. Surface Burning Characteristics: Flame spread index of 0 and smoke developed index of 0, when tested in accordance with ASTM E 84, both blanket and foil.
  2. Combustibility: Non-combustible, when tested in accordance with ASTM E 136.
  3. Flexibility: Capable of being formed around corners and shapes by hand.
  4. Surface: Foil or other damage resistant surface; fiber not exposed after installation.
  5. Accommodation For Duct Access Doors and Panels: Capable of being installed to achieve fire rating without impeding access.
  6. Acceptable Product: 3M Fire Barrier Duct Wrap; fire resistant inorganic blanket encapsulated with scrim-reinforced foil facing.
- B. Fasteners: Non-combustible; use one or both of the following to attach fireproofing to ducts:
  1. Banding: Steel or stainless steel, 1/2 inch wide, minimum, and 0.015 inch thick, minimum; with steel banding clips.
  2. Insulation Pins: Copper-coated steel impalement pins, minimum 12 gage, for welded attachment, with galvanized steel self-locking washers, 1-1/2 inch square or diameter; or equivalent sized cup-head pins.
- C. Access Panel Hardware: Galvanized threaded rods, sleeves, washers, and wing nuts as specified in manufacturer's instructions.
- D. Tape: Aluminum foil tape for sealing exposed fiber edges and repairing tears in facing.
- E. Firestopping: Material tested in conjunction with fireproofing, in accordance with ASTM E 814, to achieve fire rated penetration seal at duct penetrations through fire rated assemblies.
  1. Fire Rating: Same or greater than rating of penetrated assembly.
  2. Acceptable Products: 3M Fire Barrier 1000 N/S, 1003 S/L, and 2000+ Silicone Sealants, as required by tested assembly.

PART 3 EXECUTION

3.01 EXAMINATION
- A. Do not begin installation until substrates have been properly prepared.
- B. If substrate preparation is the responsibility of another installer, notify Engineer of unsatisfactory preparation before proceeding.

3.02 PREPARATION
- A. Clean surfaces thoroughly prior to installation.
- B. Prepare surfaces using the methods recommended by the manufacturer for achieving the best result for the substrate under the project conditions.

3.03 INSTALLATION
- A. Install in strict accordance with manufacturer's instructions and as indicated on

PAUL DHANENS • ARCHITECT

ARCHITECT

LICENSED ARCHITECT
PAUL DHANENS
NO. C-23843
RENEWAL
STATE OF CALIFORNIA

5100 CALIFORNIA AVE, SUITE 107
BAKERSFIELD, CALIFORNIA 93309
TELEPHONE: (661) 326-8936
FACSIMILE: (661) 326-8937

CONSULTANT

COPYRIGHT

PAUL DHANENS ARCHITECT expressly reserves its copyright and other property rights in these documents which are not to be reproduced, changed or copied in any written, graphic or electronic form, nor assigned to any third party without the expressed written consent of PAUL DHANENS ARCHITECT.

NOTICE TO CONTRACTORS
Written dimensions on these drawings shall take precedence over scaled dimensions. Contractor shall verify and be responsible for confirming all dimensions and shall notify the architect immediately of any descriepencies or field variations discovered.

PROJECT

TENANT IMPROVEMENT FOR

Steak 'n Shake — FAMOUS FOR STEAKBURGERS

1966 WEST AVE L
LANCASTER, CA

DATE	ISSUED FOR
9-24-18	BUILDING DEPT SUBMITTAL
6-26-19	

NO.	REVISIONS
1	
2	
3	
4	

MECHANICAL

FILE NAME: 2366A2-0

SHEET

M-301

the Drawings.
B. Perform all required regulatory duct leakage and weld tests in the presence of the code official, including but not limited to light tests and smoke tests, to demonstrate the integrity of the duct construction prior to the installation of any insulation that prevents visual inspection of the ductwork on all sides.
C. Install fireproofing on entire surface of ducts indicated, except where Contract Documents explicitly indicate 3-sided or 2-sided installation.
D. At penetrations of ducts through fire rated assemblies (walls, floors, roofs), extend fireproofing through the opening and seal annular space between fireproofing and edge of opening with firestopping.
E. Fasten fireproofing to ducts using either banding or insulation pins welded directly to surface of duct; do not use adhesives.
F. Install fireproofing on supports and hangers unless hanger rods are at least 3/8 inch in diameter, spaced not more than 60 inches on center along length of duct, and horizontal supports are at least 2 by 2 by 1/4 inch steel angle or equivalent SMACNA support system.
G. Access Panels: Do not block access; install fireproofing so that panel can be removed and reinstalled without damaging fireproofing.
H. Seal all cut edges and ends and repair tears in facing using aluminum foil tape.

END OF SECTION

SECTION 233100 – HVAC DUCTS AND CASINGS

PART 1 GENERAL

1.01 SECTION INCLUDES
A. Metal ductwork.
B. Nonmetal ductwork.
C. Round spiral ductwork
D. Double wall insulated round ductwork.
E. Kitchen hood ductwork, Type 1 grease hoods.
F. Duct cleaning.

1.02 PERFORMANCE REQUIREMENTS
A. No variation of duct configuration or sizes permitted except by written permission. Size round ducts installed in place of rectangular ducts in accordance with ASHRAE table of equivalent rectangular and round ducts, only after approval of the Engineer. Sizes shown on design drawings are air dimensions. Contractor may increase duct size without engineer approval, provided oil ceiling and shaft clearances are not reduced. Additional charges for increased duct size will not be accepted by the owner.
B. Report all conflicts with structure or other obstructions, prior to fabrication of any ductwork. Suitable adjustments in the sizes of ducts shall be accommodated without any additional expense to the Owner.

1.03 SUBMITTALS
A. Shop Drawings: Indicate duct fittings, particulars such as gages, sizes, welds, and configuration prior to start of work for all systems. No ductwork shall be fabricated until drawings have been reviewed by the Contractor. Identify on ductwork shop drawings any deviations in sizes or shapes made necessary by the obstructions of other trades.
B. Test Reports: Indicate pressure tests performed. Include date, section tested, test pressure, and leakage rate, following SMACNA (LEAK) – HVAC Air Duct Leakage Test Manual.

1.04 REGULATORY REQUIREMENTS
A. Construct ductwork to NFPA 90A, NFPA 90B, and NFPA 96 standards.
B. Code or utility company requirements shall supersede any conflicting requirements of this Section.

1.05 FIELD CONDITIONS
A. Do not install duct sealants when temperatures are less than those recommended by sealant manufacturers.
B. Maintain temperatures within acceptable range during and after installation of duct sealants.

PART 2 PRODUCTS

2.01 MATERIALS
A. Galvanized Steel Ducts: Hot-dipped galvanized steel sheet, ASTM A 653/A 653M FS Type B, with G90/Z275 coating.
B. Steel Ducts: ASTM A 1008/A 1008M, Designation CS, cold-rolled commercial steel.
C. Aluminum Ducts: ASTM B 209 (ASTM B 209M); aluminum sheet, alloy 3003-H14. Aluminum Connectors and Bar Stock: Alloy 6061-T651 or of equivalent strength.
D. Insulated Flexible Ducts:
1. The Contractor may use any of the following ductwork materials, at his option, provided the selected material meets with the approval of all State, local authorities and utility company requirements. Verification of compliance of the selected ductwork material is the sole responsibility of the Installing Contractor.
2. Two ply vinyl film supported by helically wound spring steel wire; fiberglass insulation; aluminized vapor barrier film.
a. Pressure Rating: 10 inches WG positive and 1.0 inches WG negative.
b. Maximum Velocity: 4000 fpm.
c. Temperature Range: −10 degrees F to 160 degrees F.
d. Minimum R-Value: 4.2 or greater as required by the applicable energy codes.
3. Black polymer film supported by helically wound spring steel wire; fiberglass insulation; aluminized vapor barrier film.
a. Pressure Rating: 4 inches WG positive and 0.5 inches WG negative.
b. Maximum Velocity: 4000 fpm.
c. Temperature Range: −20 degrees F to 175 degrees F.
d. Minimum R-Value: 4.2 or greater as required by the applicable energy codes.
4. Multiple layers of aluminum laminate supported by helically wound spring steel wire; fiberglass insulation; aluminized vapor barrier film.
a. Pressure Rating: 10 inches WG positive and 1.0 inches negative.
b. Maximum Velocity: 4000 fpm.
c. Temperature Range: −20 degrees F to 210 degrees F.
d. Minimum R-Value: 4.2 or greater as required by the applicable energy codes.
5. UL 181, Class 1, aluminum laminate and polyester film with latex adhesive supported by helically wound spring steel wire; fiberglass insulation; aluminized vapor barrier film.
a. Pressure Rating: 10 inches WG positive and 1.0 inches WG negative.
b. Maximum Velocity: 4000 fpm.
c. Temperature Range: −20 degrees F to 210 degrees F.
d. Minimum R-Value: 4.2 or greater as required by the applicable energy codes.
6. UL 181, Class 0, interlocking spiral of aluminum foil; fiberglass insulation; aluminized vapor barrier film.
a. Pressure Rating: 8 inches WG positive or negative.
b. Maximum Velocity: 5000 fpm.
c. Temperature Range: −20 degrees F to 250 degrees F.
d. Minimum R-Value: 4.2 or greater as required by the applicable energy codes.
E. Joint Sealers and Sealants: Non-hardening, water resistant, mildew and mold resistant.
1. Type: Heavy mastic or liquid used alone or with tape, suitable for joint configuration and compatible with substrates, and recommended by manufacturer for pressure class of ducts.
2. VOC Content: Not more than 250 g/L, excluding water.
3. Surface Burning Characteristics: Flame spread of zero, smoke developed of zero, when tested in accordance with ASTM E 84.
4. For Use With Flexible Ducts: UL labeled.
5. Ductwork Exposed to the Weather: Hard cast VersaGrip 102, (VG-102), UL 181-AM compliant duct joint sealer, as manufactured by Carlisle, with fiberglass scrim tape reinforcement on all seams and joints, lateral and longitudinal.
F. Hanger Rod: ASTM A 36/A 36M; steel; threaded both ends, threaded one end, or continuously threaded.

2.02 DUCTWORK FABRICATION
A. Fabricate, support and seal in accordance with SMACNA HVAC Duct Construction Standards – Metal and Flexible, and as indicated. Provide duct material, gages, reinforcing, and sealing for operating pressures indicated.
B. Construct Ts, bends, and elbows with radius of not less than 1-1/2 times width of duct on centerline. Where not possible and where rectangular elbows must be used, provide turning vanes. Where acoustical lining is indicated, provide turning vanes of perforated metal with glass fiber insulation.
C. Increase duct sizes gradually, not exceeding 15 degrees divergence wherever possible; maximum 30 degrees divergence upstream of equipment and 45 degrees convergence downstream.
D. Fabricate continuously welded round and oval duct fittings two gages heavier than duct gages indicated in SMACNA Standard. Joints shall be minimum 4 inch cemented slip joint, brazed or electric welded. Prime coat welded joints.
E. Provide standard 45 degree lateral wye takeoffs unless otherwise indicated where 90 degree conical tee connections may be used.
F. Where ducts are connected to exterior wall louvers and duct outlet is smaller than louver frame, provide blank-out panels sealing louver area around duct. Use same material as duct, painted black on exterior side; seal to louver frame and duct.

2.03 DUCT MANUFACTURERS
A. Metal-Fab, Inc.; SEMCO Incorporated; United McGill Corporation.

2.04 MANUFACTURED METAL DUCTWORK AND FITTINGS
A. Manufacture in accordance with SMACNA HVAC Duct Construction Standards – Metal and Flexible, and as indicated. Provide duct material, gages, reinforcing, and sealing for operating pressures indicated.
B. Round Spiral Ducts: Machine made from round spiral lockseam duct with light reinforcing corrugations; fittings manufactured of at least two gages heavier metal than duct.
C. Double Wall Insulated Round Ducts: Round spiral lockseam duct with galvanized steel outer wall, 1 inch thick fiberglass insulation, perforated galvanized steel inner wall; fitting with solid inner wall.
D. Transverse Duct Connection System: SMACNA "E" rated rigidly class connection, interlocking angle and duct edge connection system with sealant, gasket, cleats, and corner clips.

2.05 KITCHEN HOOD EXHAUST DUCTWORK, TYPE 1
A. Fabricate in accordance with SMACNA HVAC Duct Construction Standards – Metal and Flexible, and NFPA 96.
B. Construct of 16 gage carbon steel or 18 gage stainless steel, using continuous external welded joints.

PART 3 EXECUTION

3.01 EXAMINATION
A. Examine drawings for the Architectural, Structural, Electrical and all other trades prior to preparation of ductwork shop drawings and prior to the fabrication of any ductwork.
B. Resolve any conflicts encountered with the Engineer prior to fabrication.
C. Identify on ductwork shop drawings any deviations in sizes or shapes made necessary by the obstructions of other trades.

3.02 INSTALLATION
A. Install in accordance with manufacturer's instructions.
B. Duct sizes indicated are inside clear dimensions. For lined ducts, maintain sizes inside lining.
C. Install oval and round metal and flexible ducts in accordance with SMACNA HVAC Duct Construction Standards – Metal and Flexible.
D. Provide openings in ductwork where required to accommodate thermometers and controllers. Provide pilot tube openings where required for testing of systems, complete with metal can with spring device or screw to ensure against air leakage. Where openings are provided in insulated ductwork, install insulation material inside a metal ring.
E. Locate ducts with sufficient space around equipment to allow normal operating and maintenance activities.
F. Use crimp joints with or without bead for joining round duct sizes 8 inch and smaller with crimp in direction of air flow.
G. Use double nuts and lock washers on threaded rod supports.
H. Connect flexible ducts to metal ducts with draw bands.
I. Support flexible duct runs every five feet in the horizontal direction to avoid dips and sags.
J. Connect terminal units to supply ducts with one foot maximum length of flexible duct. Do not use flexible duct to change direction.
K. Connect diffusers to low pressure ducts directly or with 5 feet maximum length of flexible duct held in place with strap or clamp. Longer duct lengths are acceptable if depicted on the design drawings and allowed per local code. A maximum of one 90 degree bend, or equivalent, will be allowed in flexible duct runs.
L. During construction provide temporary closures of metal or taped polyethylene on open ductwork to prevent construction debris entering ductwork system.
M. All exposed ducts in finished areas must be completely free from all dents or imperfections in the galvanized coating and shall be sealed CAREFULLY AND NEATLY with duct sealer completely contained within the joint. Duct tape will not be permitted in exposed locations. If round duct is indicated in exposed locations, it must be spiral. No exposed duct sealer, tape or longitudinal joints will be accepted in exposed finished areas. Line all exposed supply air ductwork.
N. Kitchen hood exhaust, Type 1: Use stainless steel for ductwork exposed to view and stainless steel or carbon steel for ducts where concealed.
O. For all hood systems, perform all required regulatory duct leakage and weld tests in the presence of the code official, including but not limited to light tests and smoke tests, to demonstrate the integrity of the duct construction prior to the installation of any insulation that prevents visual inspection of the ductwork on all sides.
P. Provide residue traps in kitchen hood exhaust ducts at base of vertical risers with provisions for clean out.
Q. All roofing penetrations shall be flashed and weather sealed by the roofing manufacturer's authorized roofing contractor at this Contractor's expense. This Contractor shall contract with the factory authorized roofing contractor for the specific roofing system applicable to this Project. The use of an unauthorized roofing contractor may result in removal and replacement of the penetration systems at this Contractor's expense.

3.03 CLEANING
A. Clean duct system and force air at high velocity through duct to remove accumulated dust or clean with high power vacuum machines. To obtain sufficient air, clean half the system at a time. Protect equipment which may be harmed by excessive dirt with temporary filters, or bypass during cleaning.

3.04 SCHEDULES
A. Ductwork Material:
B. The Contractor may use any of the following ductwork materials, at his option, provided the selected material meets with the approval of all State, local authorities and utility company requirements. Verification of compliance of the selected piping material is the sole responsibility of the Installing Contractor.
1. Low Velocity Supply (Heating Systems): Galvanized Steel, Aluminum.
2. Low Velocity Supply (System with Cooling Coils): Galvanized Steel, Aluminum.
3. Return and Relief: Galvanized Steel, Aluminum.
4. General Exhaust: Galvanized Steel, Aluminum.
5. Outside Air Intake: Galvanized Steel.
6. Kitchen Hood Exhaust, Type 1: Carbon Steel, Stainless Steel, Constructed per NFPA 96.
C. Ductwork Pressure Class:
1. Low Velocity Supply (Heating Systems): Scheduled System ESP+0.25", round up to next higher pressure class.
2. Low Velocity Supply (Systems with Cooling): Scheduled System ESP +0.5", round up to next higher pressure class.
3. Return and Relief: 1 inch.
4. General Exhaust: Scheduled System ESP +1.0", round up to next higher pressure class.
5. Outside Air Intake: 1 inch.
6. Kitchen Hood Exhaust: See drawings for maximum fan static pressure plus 50% additional.

END OF SECTION

SECTION 233300 – AIR DUCT ACCESSORIES

PART 1 GENERAL

1.01 SECTION INCLUDES
A. Air turning devices/extractors.
B. Volume control dampers.
C. Flexible duct connections.
D. Duct access doors.

PART 2 PRODUCTS

2.01 AIR TURNING DEVICES/EXTRACTORS
A. Manufacturers: Krueger; Ruskin Company; Titus.
B. Multi-blade device with blades aligned in short dimension; steel or aluminum construction with individually adjustable blades, mounting straps.

2.02 VOLUME CONTROL DAMPERS
A. Manufacturers: Louvers & Dampers, Inc.; Nailor Industries Inc.; Ruskin Company; Trefco Inc.
B. Fabricate in accordance with SMACNA HVAC Duct Construction Standards – Metal and Flexible, and as indicated.
C. Single Blade Dampers: Fabricate for duct sizes up to 6 x 30 inch.
D. Multi-Blade Damper: Fabricate of opposed blade pattern with maximum blade sizes 8 x 72 inch. Assemble center and edge crimped blades in prime coated or galvanized channel frame with suitable hardware.
E. End Bearings: Except in round ducts 12 inches and smaller, provide end bearings. On multiple blade dampers, provide oil-impregnated nylon or sintered bronze bearings.
F. The contractor shall provide either a mechanical or electrical cable operated system wherever dampers are located in non-accessible areas.
1. Mechanical cable operator system shall be similar and equal to Young Regulator Company, "Bowden Cable Control" system including damper, flexible cable with casing and concealed ceiling regulator control.
2. Electrically operated damper control system shall be similar and equal to United Enertech Corporation, "Power Balance" system including motor operated damper, RJ-11 plenum rated cabling and flush ceiling or wall mounted RJ-11 jack in remote plate. Include one hand held battery pack operator pack to be delivered to the Owner upon completion of the balancing.

2.03 FLEXIBLE DUCT CONNECTIONS
A. Fabricate in accordance with SMACNA HVAC Duct Construction Standards – Metal and Flexible, and as indicated.
B. Flexible Duct Connections: Fabric crimped into metal edging strip.
1. Fabric: UL listed fire-retardant neoprene coated woven glass fiber fabric to NFPA 90A, minimum density 30 oz per sq yd.
a. Net Fabric Width: Approximately 2 inches wide.
2. Metal: 3 inches wide, 24 gage thick galvanized steel.

2.04 DUCT ACCESS DOORS
A. Manufacturers: Acudor Products Inc.; Nailor Industries Inc.; Ruskin Company; SEMCO Incorporated.
B. Fabricate in accordance with SMACNA HVAC Duct Construction Standards – Metal and Flexible, and as indicated.
C. Fabrication: Rigid and close-fitting of galvanized steel with sealing gaskets and quick fastening locking devices. For insulated ducts, install minimum 1 inch thick insulation with sheet metal cover.
1. Less Than 12 inches Square: Secure with sash locks.
2. Up to 18 inches Square: Provide two hinges and two sash locks.
D. Access doors with sheet metal screw fasteners are not acceptable.

PART 3 EXECUTION

3.01 INSTALLATION
A. Install accessories in accordance with manufacturer's instructions, NFPA 90A, and follow SMACNA HVAC Duct Construction Standards – Metal and Flexible. Duct construction and pressure class.
B. Provide duct access doors for inspection and cleaning before and after filters, coils, fans, automatic dampers, at fire dampers, combination fire and smoke dampers, and elsewhere as indicated. Provide minimum 8 x 8 inch size for hand access, 18 x 18 inch size for shoulder access, and as indicated. Provide 4 x 4 inch for balancing dampers only. Review locations prior to fabrication.
C. Locate all dampers and control elements in accessible areas wherever possible to avoid access doors. Provide ceiling access doors for access to all dampers and control elements located above inaccessible ceiling areas. Provide minimum 12 x 12 inch size for hand access, 18 x 18 inch size for shoulder access, and as indicated. Provide 4 x 4 inch for balancing dampers only. Review locations prior to fabrication.
D. Provide balancing dampers at points on supply, return, and exhaust systems where branches are taken from larger ducts as required for air balancing. Install minimum 2 duct widths from duct take-off.
E. Provide balancing dampers on duct take-off to diffusers, grilles, and registers, regardless of whether dampers are specified as part of the diffuser, grille, or register assembly. Do not locate dampers closer than 5 feet or 10 duct diameters from the air terminal device, whichever is greater.
F. At fans and motorized equipment associated with ducts, provide flexible duct connections immediately adjacent to the equipment.
G. At equipment supported by vibration isolators, provide flexible duct connections immediately adjacent to the equipment

END OF SECTION

SECTION 233423 – HVAC POWER VENTILATORS

PART 1 GENERAL

1.01 SECTION INCLUDES
A. Roof exhausters.
B. Kitchen range hood exhausters.

PART 2 PRODUCTS

2.01 MANUFACTURERS
A. Greenheck; Loren Cook Company; PennBarry; CaptiveAire.

2.02 POWER VENTILATORS – GENERAL
A. Performance Ratings: Determined in accordance with AMCA 210 and bearing the AMCA Certified Rating Seal.
B. Sound Ratings: AMCA 301, tested to AMCA 300, and bearing AMCA Certified Sound Rating Seal.
C. Fabrication: Conform to AMCA 99.
D. UL Compliance: UL listed and labeled, designed, manufactured, and tested as suitable for the purpose specified and indicated.

2.03 ROOF EXHAUSTERS AND VENTILATORS
A. Fan Unit: V-belt or direct driven as indicated, with spun aluminum housing; resilient mounted motor; 1/2 inch mesh, 0.62 inch thick aluminum wire birdscreen; square base to suit roof curb with continuous curb gaskets.
B. Roof Curb: 20 inch high above the finished roof surface (compensate for roof insulation thickness at fan location) self-flashing of galvanized steel or aluminum construction with continuously welded seams, built-in cant strips, insulation and curb bottom, and factory installed nailer strip.
C. Disconnect Switch: Factory wired, non-fusible, in housing for thermal overload protected motor.
D. Backdraft Damper: Motor actuated (or gravity damper if depicted on design drawings), aluminum multiple blade construction, felt edged with offset hinge pin, nylon bearings, blades linked, and line voltage motor drive, power open, spring return.
E. Sheaves: Cast iron or steel, dynamically balanced, bored to fit shafts and keyed; variable and adjustable pitch motor sheave selected so required rpm is obtained with sheaves set at mid-position; fan shaft with self-aligning pre-lubricated ball bearings.
F. Kitchen hood exhausters shall be upblast with grease tray, ventilated double wall curb and hinged curb adapter base for cleaning. Hood exhausters shall comply with requirements of NFPA 96

PART 3 EXECUTION

3.01 INSTALLATION
A. Install in accordance with manufacturer's instructions.
B. Provide sheaves required for final air balance at no additional expense to the project.
C. Secure roof and wall exhausters with cadmium plated steel lag screws to roof curb or structure.
D. Extend ducts to roof and wall exhausters into roof curb or wall structure. Counterflash duct to roof or wall opening.
E. Install backdraft dampers (gravity or motorized as depicted on design drawings) on inlet to roof and wall exhausters.
F. All roofing penetrations shall be flashed and weather sealed by the roofing manufacturer's authorized roofing contractor at this Contractor's expense. This Contractor shall contract with the factory authorized roofing contractor for the specific roofing system applicable to this project. The use of an unauthorized roofing contractor may result in removal and replacement of the penetration systems at this Contractor's expense.

END OF SECTION

SECTION 233700 – AIR OUTLETS AND INLETS

PART 1 GENERAL

1.01 SECTION INCLUDES
A. Round ceiling diffusers.
B. Rectangular ceiling diffusers.
C. Perforated face ceiling diffusers.
D. Grid core exhaust and return grilles.

1.02 SUBMITTALS
A. Product Data: Provide data for equipment required for this project. Review outlets and inlets as to size, finish, and type of mounting prior to submission. Submit schedule of outlets and inlets showing type, size, location, application, accessories, and noise level.

1.03 QUALITY ASSURANCE
A. Test and rate air outlet and inlet performance in accordance with ASHRAE Std 70.
B. Test and rate louver performance in accordance with AMCA 500-L.
C. Code requirements shall supersede any conflicting requirements of this Section.

1.04 QUALIFICATIONS
A. Manufacturer Qualifications: Company specializing in manufacturing the type of products specified in this Section, with minimum five years of documented experience.

PART 2 PRODUCTS

2.01 MANUFACTURERS
A. Titus; Krueger; Price Industries; Nailor Industries Inc.; Hart & Cooley; Ruskin.

2.02 ROUND CEILING DIFFUSERS
A. Type: Round, adjustable pattern, stamped or spun, multi-core, or architectural plaque diffuser to discharge air in 360 degree pattern, with sectorizing baffles where indicated. Diffuser collar shall project not more than 1 inch above ceiling. In plaster ceilings, provide plaster ring and ceiling plaque.
B. Fabrication: Steel with baked enamel off-white finish.
C. Accessories: Opposed blade damper and multi-louvered equalizing grid with damper adjustable from diffuser face.

2.03 RECTANGULAR CEILING DIFFUSERS
A. Type: Square, adjustable pattern, stamped, multi-core, or architectural plaque diffuser to discharge air in 360 degree pattern with sectorizing baffles where indicated.
B. Frame: Inverted T-bar type. In plaster ceilings, provide plaster frame and ceiling frame. (To allow lift-out removal of the diffuser without removal of the plaster frame.)
C. Fabrication: Steel with baked enamel off-white finish.
D. Accessories: Opposed blade damper and multi-louvered equalizing grid with damper adjustable from diffuser face.

2.04 PERFORATED FACE CEILING DIFFUSERS
A. Type: Perforated face with fully adjustable pattern and removable face.
B. Frame: Inverted T-bar type. In plaster ceilings, provide plaster frame and ceiling frame. (To allow lift-out removal of the diffuser without removal of the plaster frame.)
C. Fabrication: Steel with steel frame and baked enamel off-white finish.
D. Accessories: Opposed blade damper and multi-louvered equalizing grid with damper adjustable from diffuser face.

2.05 GRID CORE EXHAUST AND RETURN GRILLES
A. Type: Fixed grilles of 1/2 x 1/2 x 1 inch louvers.
B. Fabrication: Aluminum with factory off-white enamel finish.
C. Frame: 1-1/4 inch margin with countersunk screw mounting.
D. Frame: Channel lay-in frame for suspended grid ceilings where face size exceeds 18 x 18 inch.
E. Damper (if specified on drawings): Integral, gang-operated, opposed blade type with removable key operator, operable from face.

PART 3 EXECUTION

3.01 INSTALLATION
A. Install in accordance with manufacturer's instructions and NFPA 90A.
B. Mount units on factory built roof mounting curb providing watertight enclosure to protect ductwork and utility services. Install roof mounting curb level. Install roof mounting curb so that it bears on the building structure, not on top of the roof deck or roofing materials. Provide restraints where required by local codes.
C. Provide cooling condensate drain piping (and overflow piping if required) to approved location. Condensate piping shall be Schedule 40 galvanized steel pipe, Type L copper tube, or PVC. Contractor shall verify the selected material meets with the approval of all State, local authorities and utility company requirements. Verification of compliance of the selected piping material is the sole responsibility of the installing Contractor.
Condensate piping located within the building shall be insulated with 1/2 inch thick glass fiber or flexible elastomeric cellular foam insulation. Only metallic piping systems will be allowed in return air plenum ceiling space.

END OF SECTION

SECTION 237413 – PACKAGED OUTDOOR ROOF TOP UNITS – GAS FIRED

PART 1 GENERAL

1.01 SECTION INCLUDES
A. Packaged roof top units.
B. Thermostat controls.
C. Roof mounting curb and base.
D. Economizer.
E. Power exhaust.

PART 2 PRODUCTS

2.01 MANUFACTURERS
A. Carrier Corporation; Trane Inc.; Lennox Industries; York; AAON Incorporated.

2.02 AIR CONDITIONING UNITS
A. General: Roof mounted units having gas burner and electric refrigeration.
B. Description: Self-contained, packaged, factory assembled and prewired, consisting of cabinet and frame, supply fan, heat exchanger and burner, controls, air filters, refrigerant cooling coil and compressor, dry bulb economizer and power exhaust fan where indicated on the Drawings, condenser coil and condenser fan.
C. Electrical Characteristics: As scheduled on the Drawings.
D. Disconnect Switch: Factory mount disconnect switch on equipment.

2.03 FABRICATION
A. Cabinet: Steel with baked enamel finish, including access panels with screwdriver operated flush cam type fasteners or doors with piano hinges with locking handles. Structural members shall be minimum 18 gage, with access doors or panels of minimum 20 gage.
B. Insulation: one inch thick neoprene coated glass fiber with edges protected from erosion.
C. Heat Exchangers: Aluminized steel or stainless steel where indicated on the Drawings, of welded construction.
D. Supply Fan: Forward curved centrifugal type, resiliently mounted with V-belt drive, adjustable variable pitch motor pulley, and rubber isolated hinge mounted motor or direct drive as indicated. Isolate complete fan assembly.
E. Air Filters: 2 inch thick disposable media in metal frames.
F. Roof Mounting Curb: Galvanized steel, channel frame, insulated with gaskets, nailer strips. Provide roof curb of adequate height to provide a unit mounting height of 12" or greater above the top of the roof surface with the curb mounted to the building structure. Roof curb height must compensate for the roof insulation thickness to meet this requirement.
G. Vibration Isolation Curb: Only when indicated on the Drawings.

2.04 BURNER
A. Gas Burner: Induced draft or forced draft type burner with adjustable combustion air supply, pressure regulator, gas valves, manual shut-off, intermittent spark or glow coil ignition, flame sensing device, and automatic 100 percent shut-off pilot.
B. Gas Burner Safety Controls: Energize ignition, limit time for establishment of flame, prevent opening of gas valve until pilot flame is proven, stop gas flow on ignition failure, energize blower motor, and after air flow proven and slight delay, allow gas valve to open.
C. High Limit Control: Temperature sensor with fixed stop at maximum permissible setting, de-energize burner on excessive bonnet temperature and energize burner when temperature drops to lower safe value.
D. Supply Fan Control: Temperature sensor sensing bonnet temperatures and independent of burner controls, with provisions for continuous fan operation.

2.05 EVAPORATOR COIL
A. Provide copper tube aluminum fin coil assembly with galvanized drain pan and connection.
B. Provide capillary tubes or thermostatic expansion valves for units of 6 tons capacity and less, and thermostatic expansion valves and alternate row circuiting for units 7.5 tons cooling capacity and larger.

2.06 COMPRESSOR
A. Provide hermetic or semi-hermetic compressors, 3600 rpm maximum, resiliently mounted with positive lubrication, crankcase heater, high and low pressure safety controls, motor overload protection, suction and discharge service valves and gage ports, and filter drier.
B. Five minute timed off circuit to delay compressor start.
C. Outdoor thermostat to energize compressor above 35 degrees F ambient.

2.07 CONDENSER COIL
A. Provide copper tube aluminum fin coil assembly with subcooling rows and coil guard.
B. Provide direct drive propeller fans, resiliently mounted with fan guard, motor overload protection, wired to operate with compressor.

2.08 MIXED AIR CASING
A. Dampers: Provide outside, return, and relief dampers with damper operator and control package to automatically vary outside air quantity. Outside air damper to fail to closed position. Relief dampers may be gravity balanced.
B. Gaskets: Provide tight fitting dampers with edge gaskets maximum leakage 5 percent at 2 inches pressure differential.
C. Damper Operator: 24 volt with gear train sealed in oil.
D. Damper Operator, Units 7.5 Ton Cooling Capacity and Larger: 24 volt with gear train sealed in oil with spring return on.
E. Mixed Air Controls: Maintain selected supply air temperature and return dampers to minimum position on call for heating and above 75 degrees F ambient, or when ambient air temperature exceeds return air temperature.

2.09 INTEGRATED ECONOMIZER:
A. Economizer shall be furnished and installed complete with outside air and relief dampers and controls.
B. Provide low-leakage, opposed blade dampers
1. California Projects: Meet all Title 24 requirements.
C. Economizer shall be capable of introducing up to 100% outdoor air for minimum ventilation as well as free cooling.
D. Damper actuator shall be electronic, fully modulating design.
E. Economizer outdoor hood shall be pre-painted and fully integrated with the unit.
F. Dry Bulb Control: Provide dry bulb sensor capable of measuring temperature of outdoor air and controlling economizer cut-in point at the most economical level. High level cutoff shall be set per applicable energy code.
1. California Projects: Meet all Title 24 requirements, including Economizer Fault Detection and Diagnostics (FDD).

2.10 POWER EXHAUST:
A. Package shall include exhaust fan(s) and damper for units with economizer to control over-pressurization of building including integral pressure controls.

2.11 OPERATING CONTROLS
A. Provide low voltage, adjustable thermostat to control heater stages in sequence with delay between stages, compressor and condenser fan, and supply fan to maintain temperature setting.
1. Include system selector switch (off-heat-auto-cool) and fan control switch (auto-on).
2. The Mechanical Contractor shall provide all control wiring between thermostat and unit control panel and any required remote sensors.
3. Locate thermostat in room as shown.
4. Electric solid state microcomputer based room thermostat, located as indicated. Provide remote sensors when indicated on the Drawings.
a. Room thermostat shall incorporate:
1) Automatic switching from heating to cooling.
2) Preferential rate control to minimize overshoot and deviation from set point.
3) Automatic Start Capabilities: Controls shall be capable of automatically adjusting the daily start time of the HVAC system in order to bring each space to the desired occupied temperature immediately prior to scheduled occupancy.
4) Set-up for four separate temperatures per day.
5) Instant override of set point for continuous or timed period from one hour to 31 days.
6) Short cycle protection.
7) Programming based on weekdays, Saturday and Sunday.
8) Switch selection features including imperial or metric display, 12 or 24 hour clock, keyboard disable, remote sensor, fan on-auto.
b. Room thermostat display shall include:
1) Time of day.
2) Actual room temperature.
3) Programmed temperature.
4) Day of week.
5) System mode indication: heating, cooling, auto, off, fan auto, fan on.
6) Stage (heating or cooling) operation.

PART 3 EXECUTION

3.01 INSTALLATION
A. Install in accordance with manufacturer's instructions and NFPA 90A.
B. Mount units on factory built roof mounting curb providing watertight enclosure to protect ductwork and utility services. Install roof mounting curb level. Install roof mounting curb so that it bears on the building structure, not on top of the roof deck or roofing materials. Provide restraints where required by local codes.
C. Provide cooling condensate drain piping (and overflow piping if required) to approved location. Condensate piping shall be Schedule 40 galvanized steel pipe, Type L copper tube, or PVC. Contractor shall verify the selected material meets with the approval of all State, local authorities and utility company requirements. Verification of compliance of the selected piping material is the sole responsibility of the installing Contractor.
Condensate piping located within the building shall be insulated with 1/2 inch thick glass fiber or flexible elastomeric cellular foam insulation. Only metallic piping systems will be allowed in return air plenum ceiling space.

END OF SECTION

PAUL DHANENS •ARCHITECT

ARCHITECT

PAUL DHANENS
STATE OF CALIFORNIA
NO. C-23843
REGISTERED ARCHITECT

5100 CALIFORNIA AVE, SUITE 107
BAKERSFIELD, CALIFORNIA 93309
TELEPHONE: (661) 326-8536
FACSIMILE: (661) 326-8537

CONSULTANT

COPYRIGHT

PAUL DHANENS ARCHITECT expressly reserves its copyright and other property rights in these documents which are not to be reproduced, changed or copied in any written, graphic or electronic form, nor assigned to any third party without the expressed written consent of PAUL DHANENS ARCHITECT.

NOTICE TO CONTRACTORS
Written dimensions on these drawings shall take precedence over scaled dimensions. Contractor shall verify and be responsible for confirming all dimensions and shall notify the architect immediately of any descrepancies or field variations discovered.

PROJECT

TENANT IMPROVEMENT FOR

FAMOUS FOR Steak 'n Shake SIZZLEBURGERS

1966 WEST AVE L
LANCASTER, CA

DATE	ISSUED FOR
9-24-18	BUILDING DEPT SUBMITTAL
6-26-19	

NO.	REVISIONS
△	
△	
△	
△	

MECHANICAL

FILE NAME: 2366A2-0

SHEET

M-302

PLUMBING NOTES:

1. THIS SPACE IS RESERVED FOR ELECTRICAL EQUIPMENT. NO PIPING SHALL PASS BELOW, ABOVE, OR AROUND ELECTRICAL EQUIPMENT. PROVIDE CODE REQUIRED MINIMUM CLEARANCE ABOVE ELECTRICAL EQUIPMENT ACCESS SPACE.
2. FURNISH AND INSTALL WATER HEATER AND EXPANSION TANK AS INDICATED ON THE PLANS. REFER TO ARCHITECTURAL PLANS FOR WATER HEATER REQUIREMENTS AND EXACT LOCATION. PIPE WATER HEATER RELIEF AND SECONDARY DRAIN PAN DISCHARGE TO THE NEAREST MOP SINK OR FLOOR DRAIN BELOW THE WATER HEATER. PROVIDE A CODE APPROVED AIR GAP ON THE DISCHARGE OF THE WATER HEATER RELIEF AND SECONDARY DRAIN. REFER TO DETAILS SHEET FOR ADDITIONAL INFORMATION.
3. PRESSURE/TEMPERATURE RELIEF FROM WATER HEATER SHALL BE DIRECTED TO THE FLOOR DRAIN IN ACCORDANCE WITH LOCAL REQUIREMENTS.
4. 1/2" FLEXIBLE CONTINUOUS TYPE "K" COPPER TUBING BELOW GRADE FROM TRAP PRIMER TO FLOOR DRAIN. NO FITTINGS OR SPLICES ARE ALLOWED BELOW GRADE.
5. INSTALL TRAP PRIMER HIGH IN THE CEILING SPACE. FURNISH AND INSTALL AN ACCESS PANEL AS NECESSARY TO MAINTAIN EQUIPMENT.
6. THIS SPACE IS RESERVED FOR THE DOMESTIC WATER SERVICE ENTRANCE. REFER TO THE DETAIL SHEETS FOR ADDITIONAL INFORMATION. THE DOMESTIC WATER SERVICE ENTRANCE SHALL COMPLY WITH ALL STATE AND LOCAL REQUIREMENTS AND SHALL BE INSTALLED IN ACCORDANCE WITH THE MANUFACTURER'S RECOMMENDATIONS.
7. NEW NATURAL GAS METER SERVING 1,240 MBH. THE SYSTEM DESIGN IS BASED ON 7" W.C PSI DELIVERY PRESSURE WITH A PRESSURE DROP OF 0.5 INCHES OF WATER COLUMN. THE CONTRACTOR SHALL COORDINATE THE METER PLACEMENT, AVAILABLE PRESSURE, AND NEW SERVICE REQUIREMENTS WITH THE LOCAL UTILITY PRIOR TO CONSTRUCTION. IF THE DELIVERY PRESSURE INDICATED IS NOT AVAILABLE FROM THE UTILITY COMPANY, THE CONTRACTOR SHALL NOTIFY THE ARCHITECT/ENGINEER IMMEDIATELY.
8. FURNISH AND INSTALL NATURAL GAS SOLENOID VALVE MOUNTED BELOW THE FINISHED CEILING IN AN ACCESSIBLE LOCATION. THE SOLENOID VALVE SHALL BE INTERLOCKED WITH THE EXHAUST HOOD AND SHALL HAVE A MANUAL SHUT-OFF. THE VALVE SHALL BE PROVIDED AND INSTALLED BY THE PLUMBING CONTRACTOR AND SHALL BE INTERCONNECTED BY THE FIRE PROTECTION CONTRACTOR.
9. PROVIDE THERMOSTATIC MIXING VALVE, POWERS #LFE480 OR EQUAL. SET TEMPERATURE AS REQUIRED BY LOCAL JURISDICTION. THERMOSTATIC MIXING VALVE SHALL BE IN ACCORDANCE WITH ANSI/ASSE 1070. 1070.
10. CONNECT NATURAL GAS SERVICE TO ROOFTOP UNIT IN ACCORDANCE WITH THE MANUFACTURER'S RECOMMENDATIONS. REFER TO DETAIL SHEET FOR ADDITIONAL INFORMATION. VERIFY EXACT LOCATION OF NATURAL GAS CONNECTION ON ROOFTOP UNIT WITH EQUIPMENT PRIOR TO PIPE INSTALLATION.

GENERAL NOTES:

A. ALL WORK SHALL BE COMPLETED IN ACCORDANCE WITH ALL APPLICABLE GOVERNMENTAL AND LOCAL CODE REQUIREMENTS.
B. PROVIDE ACCESS PANELS AS REQUIRED TO ALLOW ACCESS TO VALVES, EQUIPMENT, ETC. LOCATED ABOVE INACCESSIBLE CEILINGS AND WALL CAVITIES.
C. ALL SANITARY LINES AND PLUMBING FIXTURES ON THE PROJECT SHALL HAVE AN APPROVED MEANS OF SEWAGE BACKFLOW PREVENTION. FIXTURE SPECIFIC BACKFLOW PREVENTION INCLUDING AIR GAPS AND VACUUM BREAKERS ARE AN ACCEPTABLE MEANS OF BACKFLOW PREVENTION.
D. COORDINATE ALL SLAB PENETRATIONS WITH GENERAL CONTRACTOR PRIOR TO CONSTRUCTION. MAINTAIN A MINIMUM OF 2" CLEARANCE FROM THE EDGE OF THE SLAB OPENING TO ANY STRUCTURAL MEMBERS AND PIPES.
E. PIPE SIZES INDICATED ON THE PLANS ARE MINIMUM. THE CONTRACTOR SHALL PROVIDE PIPE SIZES EQUAL TO OR GREATER THAN THE SPECIFIED SIZES. THE CONTRACTOR MAY INCREASE PIPE SIZES AS REQUIRED AT NO ADDITIONAL EXPENSE TO THE PROJECT.
F. REFER TO THE PLUMBING FIXTURE SCHEDULE FOR INDIVIDUAL PLUMBING FIXTURE CONNECTION SIZE REQUIREMENTS.
G. ALL HANDICAPPED ACCESSIBLE WATER CLOSETS SHALL HAVE THE FLUSHING HANDLE ON THE WIDE SIDE OF THE HANDICAPPED ACCESSIBLE STALL AS REQUIRED BY ADA REQUIREMENTS.
H. ALL PUBLIC USE LAVATORY FAUCETS SHALL HAVE AN AUTOMATIC SAFETY WATER MIXING DEVICE IN ACCORDANCE WITH ANSI/ASSE 1017 OR 1070 AS APPLICABLE.
I. ALL PIPING ON ROOF TO BE PROPERLY SUPPORTED USING APPROVED STANDS, WOOD BLOCKING IS NOT ACCEPTABLE.

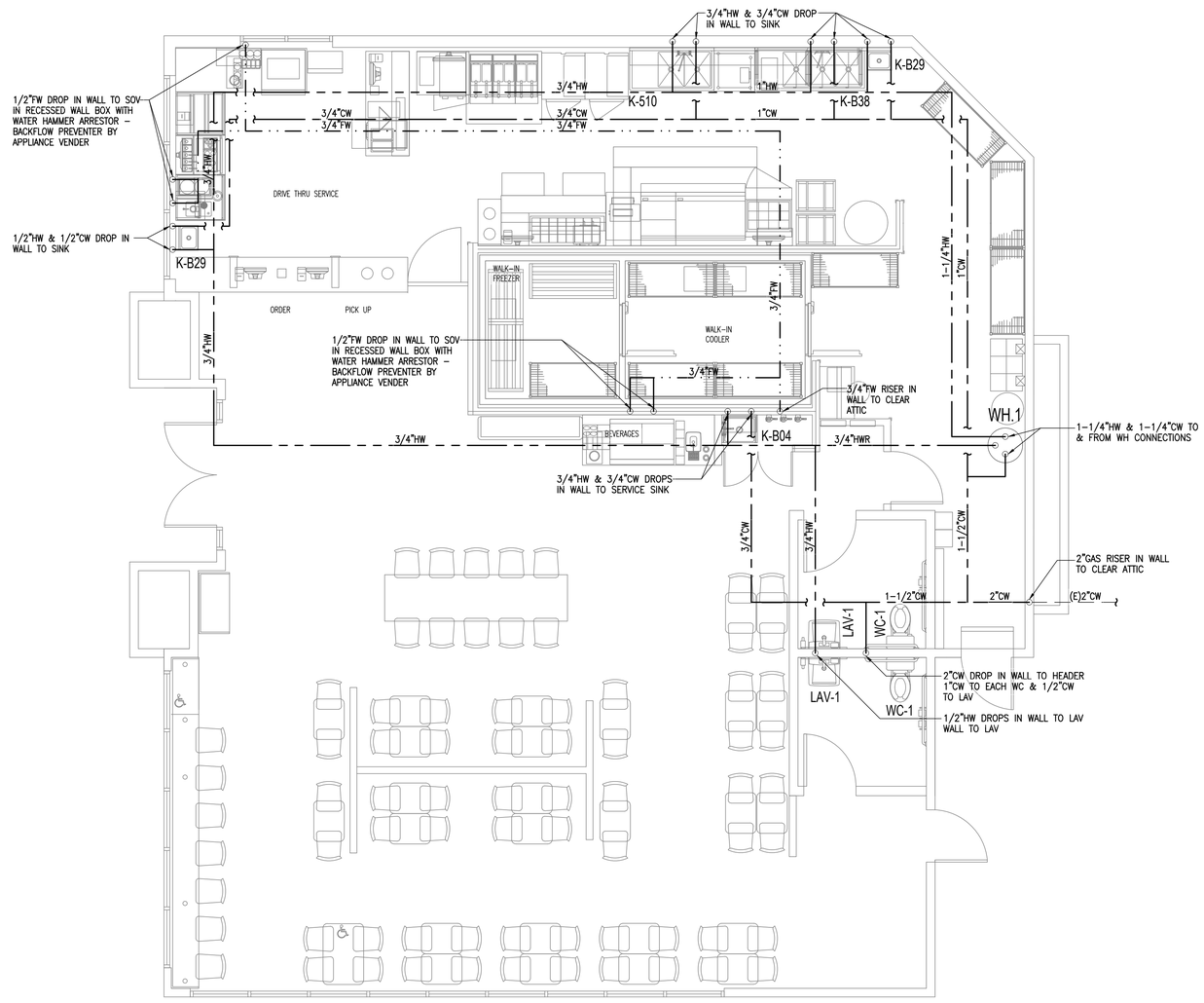

N

PLUMBING PLAN - DOMESTIC HOT & COLD WATER 1/4"

PAUL DHANENS • ARCHITECT

ARCHITECT

LICENSED ARCHITECT PAUL DHANENS NO. C-23843 RENEWAL STATE OF CALIFORNIA

5100 CALIFORNIA AVE., SUITE 107
BAKERSFIELD, CALIFORNIA 93309
TELEPHONE: (661) 326-8336
FACSIMILE: (661) 326-8337

CONSULTANT

COPYRIGHT

PAUL DHANENS ARCHITECT expressly reserves its copyright and other property rights in these documents which are not to be reproduced, changed or copied in any written, graphic or electronic form, nor assigned to any third party without the expressed written consent of PAUL DHANENS ARCHITECT.

NOTICE TO CONTRACTORS
Written dimensions on these drawings shall take precedence over scaled dimensions. Contractor shall verify and be responsible for confirming all dimensions and shall notify the architect immediately of any descrepancies or field variations discovered.

PROJECT

TENANT IMPROVEMENT FOR

FAMOUS FOR Steak 'n Shake STEAKBURGERS

1966 WEST AVE L
LANCASTER, CA

DATE	ISSUED FOR
9-24-18	BUILDING DEPT SUBMITTAL
6-28-19	

NO.	REVISIONS
△	
△	
△	
△	

PLUMBING

FILE NAME: 2366A2-0

SHEET

P-101

PLUMBING NOTES:

1. THIS SPACE IS RESERVED FOR ELECTRICAL EQUIPMENT. NO PIPING SHALL PASS BELOW, ABOVE, OR AROUND ELECTRICAL EQUIPMENT. PROVIDE CODE REQUIRED MINIMUM CLEARANCE ABOVE ELECTRICAL EQUIPMENT ACCESS SPACE.
2. UP TO 4" VENT THROUGH ROOF. INSTALL VENT THROUGH ROOF A MINIMUM DISTANCE OF 15'-0" FROM ALL FRESH AIR INLETS AND BUILDING OPENINGS.
3. VENT PIPING BELOW GRADE SHALL BE SLOPED BACK TOWARD SANITARY SYSTEM AT 1/4" PER FOOT.
4. PIPE GRAVITY PRIMARY AND AUXILIARY CONDENSATE FROM EQUIPMENT TO CODE COMPLIANT DISPOSAL POINT. THE CONDENSATE SHALL BE CONNECTED TO THE EQUIPMENT IN ACCORDANCE WITH THE MANUFACTURER'S RECOMMENDATIONS. DISCHARGE SHALL BE THROUGH A CODE APPROVED AIR GAP. THE PIPE ROUTING INDICATED ON THE PLANS IS FOR REFERENCE ONLY. INSTALL THE PIPING AS HIGH AS POSSIBLE AND COORDINATE ROUTING WITH STRUCTURAL, MECHANICAL, ELECTRICAL, ETC. CONDENSATE SHALL NOT BE RUN OVER ELECTRICAL EQUIPMENT.
5. MOUNT THE DOWNSPOUT NOZZLE AT A MINIMUM OF 1'-8" ABOVE FINISHED GRADE.
6. 4" ROOF DRAIN PIPING CONNECT TO DAYLIGHT AT CURBFACE (SEE CIVIL DRWAINGS).
7. ROUTE THE CONDENSATE PIPING ON THE ROOF FROM THE ROOFTOP UNIT TO THE NEAREST ROOF DRAIN OR GUTTER. THE CONDENSATE SHALL BE CONNECTED TO THE ROOFTOP UNIT IN ACCORDANCE WITH THE MANUFACTURER'S RECOMMENDATIONS. VERIFY CONDENSATE REMOVAL REQUIREMENTS WITH LOCAL JURISDICTION PRIOR TO INSTALLATION. IF CONFLICTS OCCUR, NOTIFY THE ARCHITECT/ENGINEER IMMEDIATELY.
8. FURNISH AND INSTALL 4" DIAMETER PVC COMBUSTION AIR AND EXHAUST FROM THE WATER HEATER TO THE EXTERIOR. FURNISH AND INSTALL CONCENTRIC VENT KIT. THE INSTALLATION SHALL BE IN ACCORDANCE WITH THE MANUFACTURER'S RECOMMENDATIONS AND ALL APPLICABLE LOCAL AND STATE CODES. COORDINATE THE MAXIMUM ALLOWABLE EXHAUST AND VENT LENGTHS WITH THE MANUFACTURER'S REQUIREMENTS.

GENERAL NOTES:

A. THE EXISTING CONDITIONS ARE BASED ON "AS-BUILT" DRAWINGS AND/OR LIMITED FIELD VERIFICATIONS. THE CONTRACTOR SHALL ADJUST TO ACTUAL FIELD CONDITIONS AT NO ADDITIONAL EXPENSE TO THE PROJECT. NO ADDITIONAL COMPENSATION WILL BE PROVIDED FOR ANY EXTRAS DUE TO THE CONTRACTOR'S FAILURE TO VISIT THE PROJECT SITE AND/OR PREDETERMINATION OF EXISTING CONDITIONS PRIOR TO SUBMITTING THE BID. ANY DISCREPANCIES SHALL BE IMMEDIATELY REPORTED TO THE ARCHITECT/ENGINEER FOR RESOLUTION.
B. THE CONTRACTOR SHALL FAMILIARIZE HIMSELF WITH THE INCIDENTAL DEMOLITION WORK PRIOR TO BIDDING AND COMMENCEMENT OF WORK. THE CONTRACTOR IS RESPONSIBLE FOR DEMOLITION OF ALL EXISTING EQUIPMENT AS REQUIRED FOR THE INSTALLATION/CONSTRUCTION OF NEW WORK.
C. ALL WORK SHALL BE COMPLETED IN ACCORDANCE WITH ALL APPLICABLE GOVERNMENTAL AND LOCAL CODE REQUIREMENTS.
D. PROVIDE ACCESS PANELS AS REQUIRED TO ALLOW ACCESS TO VALVES, EQUIPMENT, ETC. LOCATED ABOVE INACCESSIBLE CEILINGS AND WALL CAVITIES.
E. ALL SANITARY LINES AND PLUMBING FIXTURES ON THE PROJECT SHALL HAVE AN APPROVED MEANS OF SEWAGE BACKFLOW PREVENTION. FIXTURE SPECIFIC BACKFLOW PREVENTION INCLUDING AIR GAPS AND VACUUM BREAKERS ARE AN ACCEPTABLE MEANS OF BACKFLOW PREVENTION.
F. COORDINATE ALL SLAB PENETRATIONS WITH GENERAL CONTRACTOR PRIOR TO CONSTRUCTION. MAINTAIN A MINIMUM OF 2" CLEARANCE FROM THE EDGE OF THE SLAB OPENING TO ANY STRUCTURAL MEMBERS AND PIPES.
G. PIPE SIZES INDICATED ON THE PLANS ARE MINIMUM. THE CONTRACTOR SHALL PROVIDE PIPE SIZES EQUAL TO OR GREATER THAN THE SPECIFIED SIZES. THE CONTRACTOR MAY INCREASE PIPE SIZES AS REQUIRED AT NO ADDITIONAL EXPENSE TO THE PROJECT.
H. REFER TO THE PLUMBING FIXTURE SCHEDULE FOR INDIVIDUAL PLUMBING FIXTURE CONNECTION SIZE REQUIREMENTS.
I. PROVIDE TEMPORARY COVERS, CAPS, OR PLUGS ON SANITARY SEWER SYSTEM THROUGHOUT THE DURATION OF CONSTRUCTION. RAG WADS, DUCT TAPE, OR OTHER SIMILAR METHODS OF TEMPORARY COVERS SHALL NOT BE UTILIZED. UPON COMPLETION OF CONSTRUCTION, COMPLETELY REMOVE ANY AND ALL OBSTRUCTIONS INSIDE THE ENTIRE SYSTEM BY SNAKING, RODING, OR JETTING THE SYSTEM IMMEDIATELY PRIOR TO PROJECT TURNOVER TO THE OWNER.
J. ALL BELOW GRADE SANITARY LINES SHALL BE A MINIMUM OF 2" OR IN ACCORDANCE WITH LOCAL CODE REQUIREMENTS.
K. SANITARY TEE FITTINGS SHALL NOT BE INSTALLED IN DRAIN, WASTE, AND VENT (DWV) SYSTEMS.
L. INSTALL SANITARY PIPING AT A SLOPE OF 1/4" PER FOOT.
M. ALL STORM PIPING SHALL BE INSTALLED AS HIGH AS POSSIBLE AND AS CLOSE TO THE BOTTOM OF ROOF DECKING AS POSSIBLE. THE STORM PIPING SHALL BE SLOPED AT 1/8" PER FOOT UNLESS NOTED OTHERWISE.
N. THE PLUMBING CONTRACTOR SHALL PROVIDE HEAT TRACING TAPE AND INSULATION AS REQUIRED FOR ALL PIPING INSTALLED WITHIN WALK-IN FREEZERS TO PREVENT PIPING FROM FREEZING. COORDINATE THE INSTALLATION OF THE HEAT TRACING WITH THE ELECTRICAL CONTRACTOR PRIOR TO INSTALLATION.
O. ALL HANDICAPPED ACCESSIBLE WATER CLOSETS SHALL HAVE THE FLUSHING HANDLE ON THE WIDE SIDE OF THE HANDICAPPED ACCESSIBLE STALL AS REQUIRED BY ADA REQUIREMENTS.

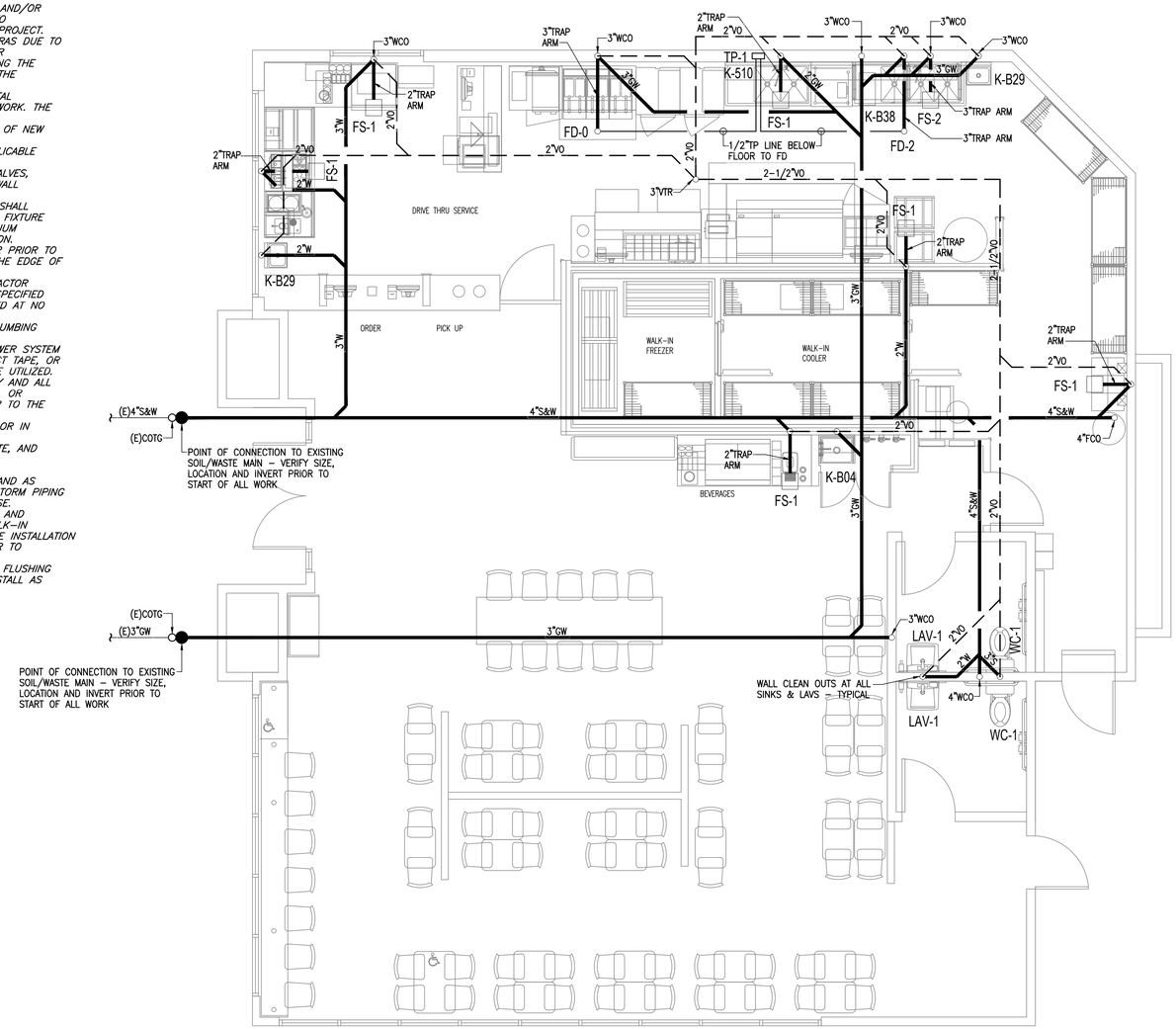

N

PLUMBING PLAN - SOIL, WASTE & VENT

1/4"

PAUL DHANENS • ARCHITECT

ARCHITECT

LICENSED ARCHITECT PAUL DHANENS NO. C-23843 RENEWAL STATE OF CALIFORNIA

5100 CALIFORNIA AVE., SUITE 107
BAKERSFIELD, CALIFORNIA 93309
TELEPHONE: (661) 326-8336
FACSIMILE: (661) 326-8337

CONSULTANT

COPYRIGHT

PAUL DHANENS ARCHITECT expressly reserves its copyright and other property rights in these documents which are not to be reproduced, changed or copied in any written, graphic or electronic form nor assigned to any third party without the expressed written consent of PAUL DHANENS ARCHITECT.

NOTICE TO CONTRACTORS
Written dimensions on these drawings shall take precedence over scaled dimensions. Contractors shall verify and be responsible for confirming all dimensions and shall notify the architect immediately of any descrepancies or field variations discovered.

PROJECT

TENANT IMPROVEMENT FOR

FAMOUS FOR Steak 'n Shake STEAKBURGERS

1966 WEST AVE L
LANCASTER, CA

DATE	ISSUED FOR
9-24-18	BUILDING DEPT SUBMITTAL
6-26-19	

NO.	REVISIONS
△	
△	
△	
△	

PLUMBING

FILE NAME: 2366A2-0

SHEET

P-102

PLUMBING NOTES:

1. THIS SPACE IS RESERVED FOR ELECTRICAL EQUIPMENT. NO PIPING SHALL PASS BELOW, ABOVE, OR AROUND ELECTRICAL EQUIPMENT. PROVIDE CODE REQUIRED MINIMUM CLEARANCE ABOVE ELECTRICAL EQUIPMENT ACCESS SPACE.
2. FURNISH AND INSTALL WATER HEATER AND EXPANSION TANK AS INDICATED ON THE PLANS. REFER TO ARCHITECTURAL PLANS FOR WATER HEATER REQUIREMENTS AND EXACT LOCATION. PIPE WATER HEATER RELIEF AND SECONDARY DRAIN PAN DISCHARGE TO THE NEAREST MOP SINK OR FLOOR DRAIN BELOW THE WATER HEATER. PROVIDE A CODE APPROVED AIR GAP ON THE DISCHARGE OF THE WATER HEATER RELIEF AND SECONDARY DRAIN. REFER TO DETAILS SHEET FOR ADDITIONAL INFORMATION.
3. PRESSURE/TEMPERATURE RELIEF FROM WATER HEATER SHALL BE DIRECTED TO THE FLOOR DRAIN IN ACCORDANCE WITH LOCAL REQUIREMENTS.
4. 1/2" FLEXIBLE CONTINUOUS TYPE "K" COPPER TUBING BELOW GRADE FROM TRAP PRIMER TO FLOOR DRAIN. NO FITTINGS OR SPLICES ARE ALLOWED BELOW GRADE.
5. INSTALL TRAP PRIMER HIGH IN THE CEILING SPACE. FURNISH AND INSTALL AN ACCESS PANEL AS NECESSARY TO MAINTAIN EQUIPMENT.
6. THIS SPACE IS RESERVED FOR THE DOMESTIC WATER SERVICE ENTRANCE. REFER TO THE DETAIL SHEETS FOR ADDITIONAL INFORMATION. THE DOMESTIC WATER SERVICE ENTRANCE SHALL COMPLY WITH ALL STATE AND LOCAL REQUIREMENTS AND SHALL BE INSTALLED IN ACCORDANCE WITH THE MANUFACTURER'S RECOMMENDATIONS.
7. NEW NATURAL GAS METER SERVING 1,240 MBH. THE SYSTEM DESIGN IS BASED ON 7" W.C PSI DELIVERY PRESSURE WITH A PRESSURE DROP OF 0.5 INCHES OF WATER COLUMN. THE CONTRACTOR SHALL COORDINATE THE METER PLACEMENT, AVAILABLE PRESSURE, AND NEW SERVICE REQUIREMENTS WITH THE LOCAL UTILITY PRIOR TO CONSTRUCTION. IF THE DELIVERY PRESSURE INDICATED IS NOT AVAILABLE FROM THE UTILITY COMPANY, THE CONTRACTOR SHALL NOTIFY THE ARCHITECT/ENGINEER IMMEDIATELY.
8. FURNISH AND INSTALL NATURAL GAS SOLENOID VALVE MOUNTED BELOW THE FINISHED CEILING IN AN ACCESSIBLE LOCATION. THE SOLENOID VALVE SHALL BE INTERLOCKED WITH THE EXHAUST HOOD AND SHALL HAVE A MANUAL SHUT-OFF. THE VALVE SHALL BE PROVIDED AND INSTALLED BY THE PLUMBING CONTRACTOR AND SHALL BE INTERCONNECTED BY THE FIRE PROTECTION CONTRACTOR.
9. PROVIDE THERMOSTATIC MIXING VALVE, POWERS #LFE480 OR EQUAL. SET TEMPERATURE AS REQUIRED BY LOCAL JURISDICTION. THERMOSTATIC MIXING VALVE SHALL BE IN ACCORDANCE WITH ANSI/ASSE 1070. 1070.
10. CONNECT NATURAL GAS SERVICE TO ROOFTOP UNIT IN ACCORDANCE WITH THE MANUFACTURER'S RECOMMENDATIONS. REFER TO DETAIL SHEET FOR ADDITIONAL INFORMATION. VERIFY EXACT LOCATION OF NATURAL GAS CONNECTION ON ROOFTOP UNIT WITH EQUIPMENT PRIOR TO PIPE INSTALLATION.

GENERAL NOTES:

A. ALL WORK SHALL BE COMPLETED IN ACCORDANCE WITH ALL APPLICABLE GOVERNMENTAL AND LOCAL CODE REQUIREMENTS.
B. PROVIDE ACCESS PANELS AS REQUIRED TO ALLOW ACCESS TO VALVES, EQUIPMENT, ETC. LOCATED ABOVE INACCESSIBLE CEILINGS AND WALL CAVITIES.
C. ALL SANITARY LINES AND PLUMBING FIXTURES ON THE PROJECT SHALL HAVE AN APPROVED MEANS OF SEWAGE BACKFLOW PREVENTION. FIXTURE SPECIFIC BACKFLOW PREVENTION INCLUDING AIR GAPS AND VACUUM BREAKERS ARE AN ACCEPTABLE MEANS OF BACKFLOW PREVENTION.
D. COORDINATE ALL SLAB PENETRATIONS WITH GENERAL CONTRACTOR PRIOR TO CONSTRUCTION. MAINTAIN A MINIMUM OF 2" CLEARANCE FROM THE EDGE OF THE SLAB OPENING TO ANY STRUCTURAL MEMBERS AND PIPES.
E. PIPE SIZES INDICATED ON THE PLANS ARE MINIMUM. THE CONTRACTOR SHALL PROVIDE PIPE SIZES EQUAL TO OR GREATER THAN THE SPECIFIED SIZES. THE CONTRACTOR MAY INCREASE PIPE SIZES AS REQUIRED AT NO ADDITIONAL EXPENSE TO THE PROJECT.
F. REFER TO THE PLUMBING FIXTURE SCHEDULE FOR INDIVIDUAL PLUMBING FIXTURE CONNECTION SIZE REQUIREMENTS.
G. ALL HANDICAPPED ACCESSIBLE WATER CLOSETS SHALL HAVE THE FLUSHING HANDLE ON THE WIDE SIDE OF THE HANDICAPPED ACCESSIBLE STALL AS REQUIRED BY ADA REQUIREMENTS.
H. ALL PUBLIC USE LAVATORY FAUCETS SHALL HAVE AN AUTOMATIC SAFETY WATER MIXING DEVICE IN ACCORDANCE WITH ANSI/ASSE 1017 OR 1070 AS APPLICABLE.
I. ALL PIPING ON ROOF TO BE PROPERLY SUPPORTED USING APPROVED STANDS, WOOD BLOCKING IS NOT ACCEPTABLE.

GAS CALCS

GRIDDLE	= 54,000	BTU
GRIDDLE	= 108,000	BTU
FRYER	= 218,000	BTU
WATER HTR	= 199,000	BTU
MUA	= 184,900	BTU
AC	= 120,000	BTU
	883,900	BTU

883,900/1100= 804 CFH
DISTANCE= 90 FT
USE (1)2"GAS

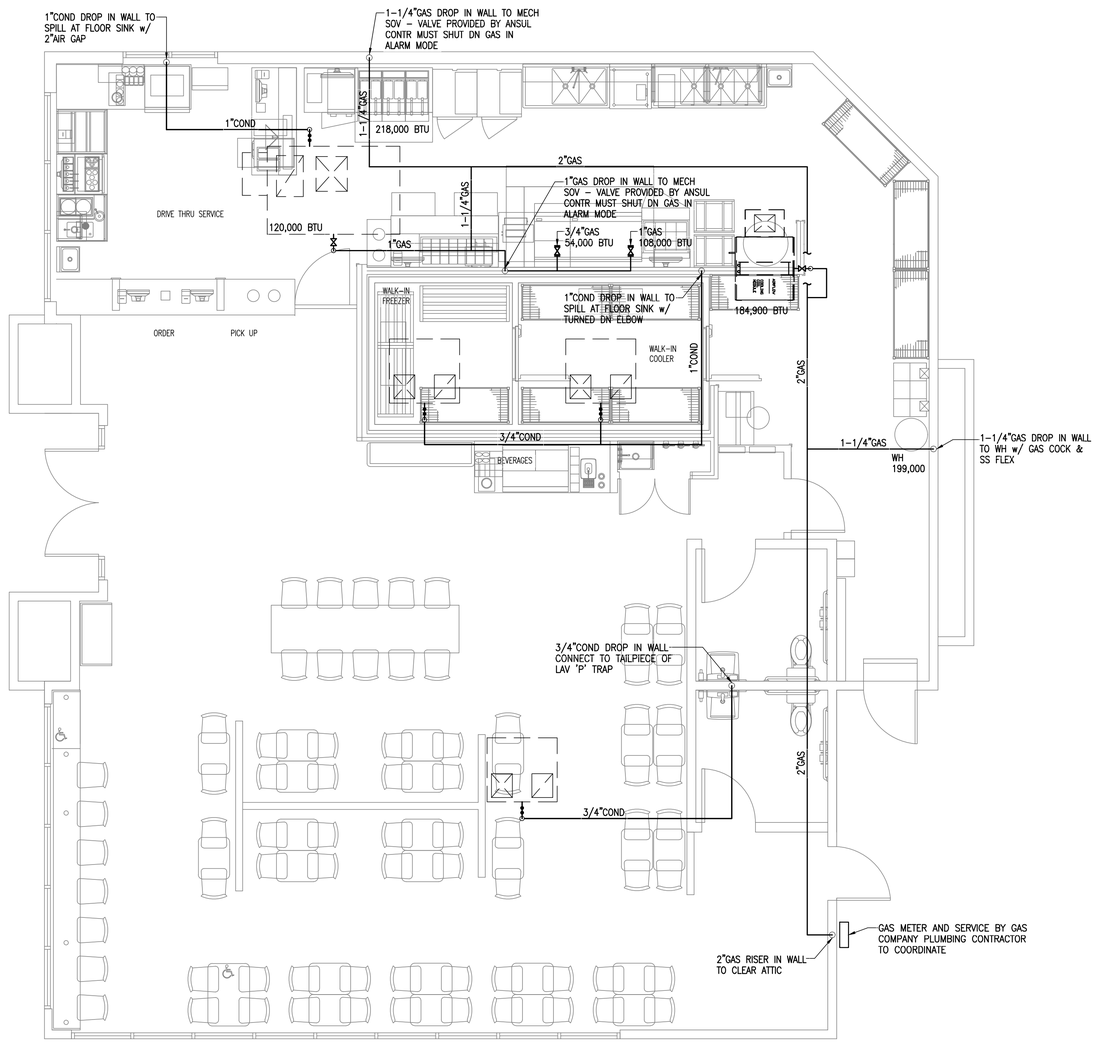

N

PLUMBING PLAN - GAS & CONDENSATE

1/4"

PAUL DHANENS • ARCHITECT

ARCHITECT

LICENSED ARCHITECT PAUL DHANENS NO. C-23843 RENEWAL STATE OF CALIFORNIA

5100 CALIFORNIA AVE., SUITE 107
BAKERSFIELD, CALIFORNIA 93309
TELEPHONE: (661) 326-8336
FACSIMILE: (661) 326-8337

CONSULTANT

COPYRIGHT

PAUL DHANENS ARCHITECT expressly reserves its copyright and other property rights in these documents which are not to be reproduced, changed or copied in any written, graphic, electronic or other form or assigned to any third party without the expressed written consent of PAUL DHANENS ARCHITECT.

NOTICE TO CONTRACTORS
Written dimensions on these drawings shall take precedence over scaled dimensions. Contractors shall verify and be responsible for confirming all dimensions and shall notify the architect immediately of any descripancies or field variations discovered.

PROJECT

TENANT IMPROVEMENT FOR

FAMOUS FOR Steak 'n Shake STEAKBURGERS

1966 WEST AVE L
LANCASTER, CA

DATE	ISSUED FOR
9-24-18	BUILDING DEPT SUBMITTAL
6-26-19	

NO.	REVISIONS
△	
△	
△	
△	

PLUMBING

FILE NAME: 2366A2-0

SHEET

P103

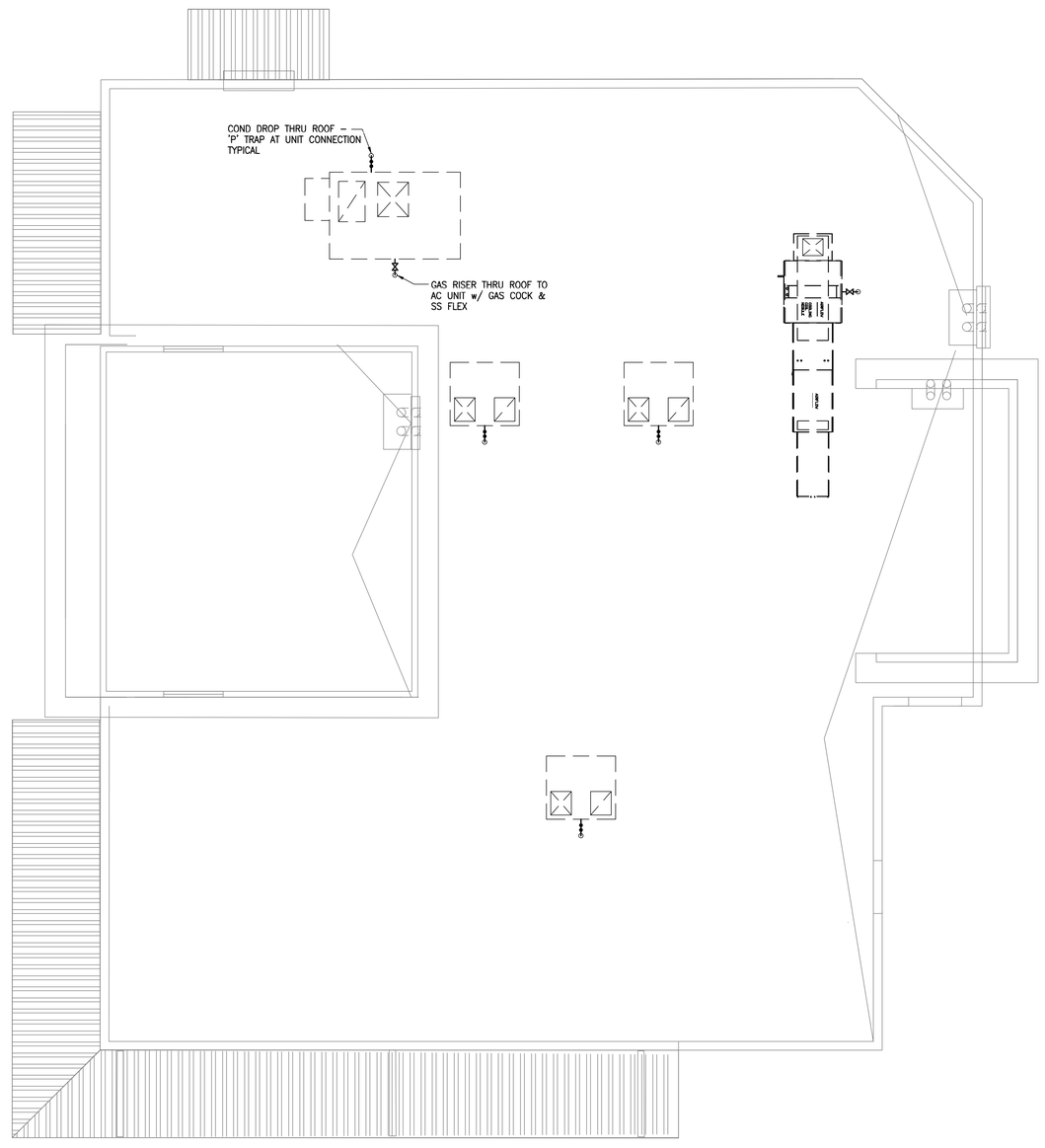

N

PLUMBING ROOF PLAN

1/4"

PAUL DHANENS • ARCHITECT

ARCHITECT

REGISTERED ARCHITECT
PAUL DHANENS
NO. C-23843
RENEWAL
STATE OF CALIFORNIA

5100 CALIFORNIA AVE., SUITE 107
BAKERSFIELD, CALIFORNIA 93309
TELEPHONE: (661) 326-8936
FACSIMILE: (661) 326-8937

CONSULTANT

COPYRIGHT

PAUL DHANENS ARCHITECT expressly reserves its copyright and other property rights in these documents which are not to be reproduced, changed or copied in any written, graphic or electronic form, nor assigned to any third party without the expressed written consent of PAUL DHANENS ARCHITECT.

NOTICE TO CONTRACTORS
Written dimensions on these drawings shall take precedence over scaled dimensions. Contractor shall verify and be responsible for confirming all dimensions and shall notify the architect immediately of any descripancies or field variations discovered.

PROJECT

TENANT IMPROVEMENT FOR

FAMOUS FOR Steak 'n Shake STEAKBURGERS

1966 WEST AVE L
LANCASTER, CA

DATE	ISSUED FOR
9-24-18	BUILDING DEPT SUBMITTAL
6-26-19	

NO.	REVISIONS
△	
△	
△	
△	

PLUMBING

FILE NAME: 2366A2-0

SHEET

P-104

PLUMBING FIXTURE SCHEDULE

Mark		DESCRIPTION	FINAL CONNECTIONS HW	CW	V	W	MANUFACTURER MODEL NUMBER
WC-1	WATER CLOSETS	1.28 GALLONS PER FLUSH, FLOOR MOUNTED, BOTTOM OUTLET, 12" ROUGH-IN, SLOAN ROYAL FLUSH VALVE – ADA HEIGHT , COLOR: WHITE	–	1-1/4"	1 1/2"	3"	AMERICAN STANDARD: CADET
	WATER CLOSET SEAT	COMMERCIAL DUTY, EXTRA HEAVY WEIGHT, INJECTION MOLDED SOLID PLASTIC, LARGE MOLDED BUMPERS, STAINLESS STEEL POSTS, SELF-SUSTAINING, CONCEALED STAINLESS STEEL CHECK HINGE HOLDING SEAT IN ANY RAISED POSITION UP TO 11 DEG. BEYOND VERTICAL, OPEN FRONT, LESS COVER, COLOR: WHITE					CHURCH:
	SUPPLIES	–					
WC-2	WATER CLOSETS	1.6 GALLONS PER FLUSH, FLOOR MOUNTED, BOTTOM OUTLET, 12" ROUGH-IN, LEFT HAND TRIP LEVER, 3/8" CHROME PLATED BRASS TUBING, PRESSURE ASSISTED TANK, 25 PSI MINIMUM WORKING PRESSURE, COLOR: WHITE	–	3/8"	1 1/2"	3"	AMERICAN STANDARD: CADET 2462.016
	WATER CLOSET SEAT	COMMERCIAL DUTY, EXTRA HEAVY WEIGHT, INJECTION MOLDED SOLID PLASTIC, LARGE MOLDED BUMPERS, STAINLESS STEEL POSTS, SELF-SUSTAINING, CONCEALED STAINLESS STEEL CHECK HINGE HOLDING SEAT IN ANY RAISED POSITION UP TO 11 DEG. BEYOND VERTICAL, OPEN FRONT, LESS COVER, COLOR: WHITE					CHURCH: 9500SSCT
	SUPPLIES	CHROME PLATED LEVER TYPE 1/4 TURN BALL ANGLE STOP VALVE					
~~UR-1~~	~~URINAL~~	~~WALL MOUNTED, ELONGATED RIM, ADA COMPLIANT, WASHOUT BOWL, TOP INLET SPUD, 2" OUTLET~~	~~–~~	~~3/4"~~	~~1 1/4"~~	~~2"~~	~~AMERICAN STANDARD: 6501.010~~
	~~URINAL FLUSH VALVE~~	~~3/4" TOP SPUD FOR URINALS, QUIET, EXPOSED MANUAL HANDLE, DIAPHRAGM TYPE, CHROME PLATED, DUAL FILTERED FIXED BYPASS, ADA COMPLIANT NON-HOLD-OPEN HANDLE, 1" I.P.S SCREWDRIVER BACK CHECK ANGLE STOP, FREE SPINNING VANDAL RESISTANT STOP CAP, ADJUSTABLE TAILPIECE, HIGH BACK PRESSURE VACUUM BREAKER FLUSHING CONNECTION, ONE-PIECE BOTTOM HEX COUPLING~~					~~SLOAN: 186-1.0~~
	~~URINAL CARRIER~~	~~SPECIFICATION "FIXTURE CARRIER, WALL URINAL SUPPORT SYSTEM, TOP AND BOTTOM SUPPORT PLATES, COATED RECTANGULAR STEEL UPRIGHTS, WELDED FEET, ADJUSTABLE SUPPORT PLATES, MOUNTING FASTENERS, "~~					~~ZURN: Z1222~~
	~~MOUNTING HEIGHT~~	~~24" MAXIMUM A.F.F~~					
LAV-1	LAVATORIES	WALL HUNG, VITREOUS CHINA, D-SHAPED BOWL, FRONT OVERFLOW, SELF-DRAINING DECK AREA WITH CONTOURED BACK AND SIDE SPLASH SHIELDS, CONCEALED WALL HANGAR, RECTANGULAR SHAPED LAVATORY, SIZE: VITREOUS CHINA, FRONT OVERFLOW, 3 FAUCET HOLES CENTERED ON 4" CENTERS, LESS SOAP DISPENSER HOLE, ADA COMPLIANT, 34" TOP OF LAVATORY TO FINISHED FLOOR COLOR: WHITE	3/8"	3/8"	1 1/4"	1 1/4"	AMERICAN STANDARD: LUCERNE 0355.012
	LAVATORY FAUCET	DUAL HANDLE WITH WRIST BLADES, ADA COMPLIANT, DECK MOUNTED, SOLID BRASS BODY, CHROME PLATED, HANDLE RETURNS TO NEUTRAL POSITION WHEN TURNED OFF, METAL GRID STRAINER, 0.5 GPM AERATOR, 1/2" THREADED MALE INLET SHANKS, 95					AMERICAN STANDARD: HERITAGE 7402.000-172H-V05
	LAVATORY SUPPLIES	CHROME PLATED ANGLE STOPS WITH LOOSE KEY HANDLE, CHROME PLATED FLEXIBLE BRASS RISER, INSULATE ALL EXPOSED WATER LINES AND VALVES					
	LAVATORY WASTE	GRID DRAIN STRAINER, 1 1/4" OFFSET TAILPIECE, 1 1/4" 17 GAUGE CHROME PLATED ADJUSTABLE BRASS P-TRAP WITH CLEANOUT PLUG, 1 1/4" CHROME PLATED BRASS WASTE TO WALL					
	LAVATORY PROTECTIVE PIPE COVERS	ADA COMPLIANT, CHINA WHITE, ANTI-BACTERIA/FUNGAL, MOLDED VINYL, P-TRAP COVER, TWO ANGLE VALVE AND SUPPLY COVERS, 5" OFFSET TAILPIECE WHEEL CHAIR STRAINER COVER					TRUEBRO: 103 E-Z PLUMBEREX: X4444
K-B04	FLOOR MOP SINK	MOLDED STONE, PLAIN CURBS, ONE PIECE 24"X24"X10" SQUARE BASIN, WITH TILING FLANGE	1/2"	1/2"	1 1/4"	2"	FIAT: MSB-2424
	FLOOR MOP SINK FAUCET	WALL MOUNTED HOT AND COLD WATER SERVICE FAUCET EXTENDING 9 3/8" FROM BACK OF WALL FLANGE, VACUUM BREAKER, CHROME PLATED, 3/4" HOSE THREAD ON SPOUT, PAIL HOOK, ADJUSTABLE WALL BRACE, FLAT STAINLESS STEEL STRAINER, 24" LONG X 3" WIDE STAINLESS STEEL MOP BRACKET WITH THREE RUBBER GRIPS, 36" LONG HOSE WITH WALL HANGER					MUSTEE: 63.600A STERN WILLIAMS: T-10-VB
	SUPPLIES	1/2" HOT AND COLD WATER WITH CONCEALED STOP WITH WHEEL HANDLE, 1/2" CHROME PLATED FLEXIBLE BRASS RISER					
	WASTE	DRAIN SHALL BE INTEGRAL STAINLESS STEEL COMBINATION FLAT STRAINER AND LINT BASKET, FACTORY INSTALLED STAINLESS STEEL DRAIN BODY, CAST IRON P-TRAP					
	ACCESSORIES	24" LONG X 3" WIDE STAINLESS STEEL MOP BRACKET WITH THREE RUBBER GRIPS, 36" HOSE WITH HANGER					

PLUMBING FIXTURE SCHEDULE

Mark		DESCRIPTION	FINAL CONNECTIONS HW	CW	V	W	MANUFACTURER MODEL NUMBER
K-SS3	GENERIC FIXTURE	3/4" DOMESTIC HOT AND COLD WATER CONNECTIONS FOR SHAKE STATION 110 DEG. F. HOT WATER, COORDINATE THE LOCATION AND SIZE OF ALL PLUMBING CONNECTIONS WITH KITCHEN CONNECTION PLANS, MANUFACTURER RECOMMENDATIONS, AND LOCAL REQUIREMENTS PRIOR TO ROUGH-IN. MAKE ANY ADJUSTMENTS NECESSARY TO PROVIDE A FULLY FUNCTIONING FIXTURE.	3/4"	3/4"	–	–	
K-SS3A	GENERIC FIXTURE	3/4" DOMESTIC HOT AND COLD WATER CONNECTIONS FOR SHAKE STATION 110 DEG. F. HOT WATER, COORDINATE THE LOCATION AND SIZE OF ALL PLUMBING CONNECTIONS WITH KITCHEN CONNECTION PLANS, MANUFACTURER RECOMMENDATIONS, AND LOCAL REQUIREMENTS PRIOR TO ROUGH-IN. MAKE ANY ADJUSTMENTS NECESSARY TO PROVIDE A FULLY FUNCTIONING FIXTURE.	3/4"	3/4"	–	–	
K-S10	GENERIC FIXTURE	3/4" DOMESTIC HOT AND COLD WATER CONNECTIONS FOR PREP SINK, 140 DEG. F. HOT SUPPLY, SINGLE FAUCET ROUGH-IN, COORDINATE THE LOCATION AND SIZE OF ALL PLUMBING CONNECTIONS WITH KITCHEN CONNECTION PLANS, MANUFACTURER RECOMMENDATIONS, AND LOCAL REQUIREMENTS PRIOR TO ROUGH-IN. MAKE ANY ADJUSTMENTS NECESSARY TO PROVIDE A FULLY FUNCTIONING FIXTURE.	1/2"	1/2"	–	–	
K-B07	GENERIC FIXTURE	1/2" DOMESTIC COLD WATER CONNECTION FOR SODA FOUNTAIN BAG-N-BOX, PROVIDE DUAL CHECK VALVE FOR CARBONATED BEVERAGE MACHINES (WATTS SD-2 OR EQUAL), PROVIDE BACKFLOW PREVENTION IN ACCORDANCE WITH LOCAL REQUIREMENTS IN AN ACCESSIBLE LOCATION, COORDINATE THE LOCATION AND SIZE OF ALL PLUMBING CONNECTIONS WITH KITCHEN CONNECTION PLANS, MANUFACTURER RECOMMENDATIONS, AND LOCAL REQUIREMENTS PRIOR TO ROUGH-IN. MAKE ANY ADJUSTMENTS NECESSARY TO PROVIDE A FULLY FUNCTIONING FIXTURE	–	1/2"	–	–	
K-B29	GENERIC FIXTURE	1/2" DOMESTIC HOT AND COLD WATER CONNECTIONS FOR KITCHEN HAND SINK – FIXTURE, FAUCET, AND DRAIN BY OTHERS, PROVIDE CHROME PLATED ANGLE STOPS WITH LOOSE KEY HANDLE, CHROMATED PLATED FEXIBLE BRASS RISER, 1 1/2" 17 GAUGE CHROME PLATED ADJUSTABLE BRASS P-TRAP WITH CLEANOUT PLUG, 1 1/2" NICKEL PLATED BRASS TAILPIECE, RUN WASTE PARALLEL AND AS TIGHT TO WALL AS POSSIBLE, 110 DEG. F. HOT WATER, SINGLE FAUCET ROUGH-IN, COORDINATE THE LOCATION AND SIZE OF ALL PLUMBING CONNECTIONS WITH KITCHEN CONNECTION PLANS, MANUFACTURER RECOMMENDATIONS, AND LOCAL REQUIREMENTS PRIOR TO ROUGH-IN. MAKE ANY ADJUSTMENTS NECESSARY TO PROVIDE A FULLY FUNCTIONING FIXTURE, (1) 1 1/2" DRAIN SANITARY CONNECTION(S)	1/2"	1/2"	1 1/4"	1 1/2"	
K-B38	GENERIC FIXTURE	1/2" DOMESTIC HOT AND COLD WATER CONNECTIONS FOR 3-COMPARTMENT SINK, PROVIDE BACKFLOW PREVENTION IN ACCORDANCE WITH LOCAL REQUIREMENTS IN AN ACCESSIBLE LOCATION (WHERE APPLICABLE), PROVIDE CHEMICAL SANITATION CONNECTION IN ACCORDANCE WITH LOCAL REQUIREMENTS (WHERE APPLICABLE), 140 DEG. F. HOT SUPPLY, SINGLE FAUCET ROUGH-IN, COORDINATE THE LOCATION AND SIZE OF ALL PLUMBING CONNECTIONS WITH KITCHEN CONNECTION PLANS, MANUFACTURER RECOMMENDATIONS, AND LOCAL REQUIREMENTS PRIOR TO ROUGH-IN. MAKE ANY ADJUSTMENTS NECESSARY TO PROVIDE A FULLY FUNCTIONING FIXTURE.	1/2"	1/2"	–	–	
K-B85	GENERIC FIXTURE	1/2" DOMESTIC COLD WATER CONNECTION FOR SODA DISPENSER, PROVIDE DUAL CHECK VALVE FOR CARBONATED BEVERAGE MACHINES (WATTS SD-2 OR EQUAL), PROVIDE BACKFLOW PREVENTION IN ACCORDANCE WITH LOCAL REQUIREMENTS IN AN ACCESSIBLE LOCATION, COORDINATE THE LOCATION AND SIZE OF ALL PLUMBING CONNECTIONS WITH KITCHEN CONNECTION PLANS, MANUFACTURER RECOMMENDATIONS, AND LOCAL REQUIREMENTS PRIOR TO ROUGH-IN. MAKE ANY ADJUSTMENTS NECESSARY TO PROVIDE A FULLY FUNCTIONING FIXTURE.	–	1/2"	–	–	
2"FD-1	FLOOR DRAIN	STANDARD STRAINER, COATED CAST IRON, TWO-PIECE BODY, DOUBLE DRAINAGE FLANGE, ADJUSTABLE EXTENSION AS REQUIRED BY APPLICATION, ADJUSTABLE COLLAR WITH SEEPAGE SLOTS, INVERTIBLE NON-PUNCTURING MEMBRANE CLAMP, FLASHING CLAMP WITH 24"X24" 4 LB. LEAD FLASHING FOR FLOOR DRAINS INSTALLED ABOVE SLAB ON GRADE, BOTTOM OUTLET, OUTLET CONNECTION METHOD SHALL BE COMPATIBLE WITH PIPING MATERIALS IN ACCORDANCE WITH THE SPECIFICATIONS, POLISHED NICKEL BRONZE FINISH, 5" DIAMETER ROUND STRAINER, 1/2" TRAP PRIMER CONNECTION	–	–	1 1/4"	2"	JR SMITH: 2010-NB ZURN: Z415B
3"FD-2	FLOOR DRAIN	STANDARD STRAINER, COATED CAST IRON, TWO-PIECE BODY, DOUBLE DRAINAGE FLANGE, ADJUSTABLE EXTENSION AS REQUIRED BY APPLICATION, ADJUSTABLE COLLAR WITH SEEPAGE SLOTS, INVERTIBLE NON-PUNCTURING MEMBRANE CLAMP, FLASHING CLAMP WITH 24"X24" 4 LB. LEAD FLASHING FOR FLOOR DRAINS INSTALLED ABOVE SLAB ON GRADE, BOTTOM OUTLET, OUTLET CONNECTION METHOD SHALL BE COMPATIBLE WITH PIPING MATERIALS IN ACCORDANCE WITH THE SPECIFICATIONS, POLISHED NICKEL BRONZE FINISH, 5" DIAMETER ROUND STRAINER	–	–	1 1/4"	3"	JR SMITH: 2010-NB ZURN: Z415B

PLUMBING FIXTURE SCHEDULE

Mark		DESCRIPTION	FINAL CONNECTIONS HW	CW	V	W	MANUFACTURER MODEL NUMBER
3"FS-1 3"FS-2	FLOOR SINK	12" X 12" X 7 3/4" DEEP FLOOR SINK, COATED CAST IRON BODY, WHITE ACID-RESISTING PORCELAIN ENAMEL INTERIOR COATING, ABS ANTI-SPLASH DOME, WHITE STRAINER, OUTLET CONNECTION METHOD SHALL BE COMPATIBLE WITH PIPING MATERIALS IN ACCORDANCE WITH THE SPECIFICATIONS, NICKEL BRONZE 3/4 GRATE, SQUARE	–	–	1 1/2"	3"	ZURN: FD2376-T
FCO-1	CLEANOUT – FLOOR	ACID RESISTING COATED CAST IRON BODY, ADJUSTABLE, GAS AND WATER TIGHT ABS TAPERED THREADED INTERNAL CAST IRON PLUG, VANDAL-PROOF FASTENERS, OUTLET CONNECTION METHOD SHALL BE COMPATIBLE WITH PIPING MATERIALS IN ACCORDANCE WITH THE SPECIFICATIONS, MEDIUM DUTY, ROUND SCORIATED SECURED POLISHED BRONZE FRAME AND COVER WITH ANCHOR FLANGE, WITH "CO" IN COVER, INSTALLED FLUSH WITH FINISHED FLOOR. PROVIDE CARPET MARKERS WHERE INSTALLED BELOW CARPET	–	–	–	4"	ZURN: ZB1400-VP
WCO-1	WALL CLEANOUT	ACID RESISTING COATED CAST IRON CLEANOUT TEE, COUNTERSUNK BRONZE PLUG, ROUND STAINLESS STEEL SECURED ACCESS COVER, ACID RESISTING COATED CAST IRON CLEANOUT TEE, COUNTERSUNK BRONZE PLUG, ROUND STAINLESS STEEL SECURED ACCESS COVER, STANDARD FASTENERS	–	–	–	2"	J.R. SMITH: 4710 WADE: 8480R ZURN: Z1446
TP-1	TRAP PRIMER	PRESSURE ACTIVATED TRAP PRIMER, BRASS CONSTRUCTION, PISTON OPERATED, ADJUSTMENT FOR VARIABLE PRESSURES, INSTALL TRAP PRIMER A MINIMUM OF 12" ABOVE THE TRAP BEING SERVED, PROVIDE AIR GAP FITTING WITH 1/2" MALE NPT INLET FITTING AND 1/2" FEMALE OUTLET FITTING, SINGLE TRAP APPLICATION	–	1/2"	–	–	PRECISION PRODUCTS: – P2-500
	TRAP PRIMER DISTRIBUTION UNIT	COPPER BODY DISTRIBUTION UNIT, 4 – 3/8" FPT BRASS DISCHARGE FITTINGS, 1/2" MALE NPT COMPOSITE INLET, PROVIDE PLUGS AS REQUIRED BY APPLICATION					PRECISION PRODUCTS: – DU-4
~~WH-1~~	~~WALL HYDRANT~~	~~ENCASED, ANTI-SIPHON, AUTOMATICE DRAING, COPPER CASING, ALL BRONZE INTERIOR WALL HYDRANT WITH NON-TURNING OPERATING ROD WITH FREE-FLOATING COMPRESSION CLOSURE VALVE, VANDAL-RESISTANT LOOSE TEE HANDLE OPERATING STEM, ADJUSTABLE PACKING NUT, INTEGRAL TAMPER PROOF VACCUM BREAKER, SINGLE TEMPERATURE 3/4" INLET MALE END CONNECTION, CHROME-PLATED BOX AND HINGED COVER WITH LOOSE OPERATING KEY, NON-FREEZE CLIMATE.~~	~~–~~	~~1/2"~~	~~–~~	~~–~~	~~WOOD FORD: B65-CH B67-CH ZURN: Z1320-C~~
	~~MOUNTING HEIGHT~~	~~18" MAXIMUM A.F.F~~					

PAUL DHANENS • ARCHITECT

ARCHITECT

REGISTERED PROFESSIONAL ENGINEER PAUL DHANENS NO. C-23843 RENEW STATE OF CALIFORNIA

5100 CALIFORNIA AVE., SUITE 107
BAKERSFIELD, CALIFORNIA 93309
TELEPHONE: (661) 326-8336
FACSIMILE: (661) 326-8337

CONSULTANT

COPYRIGHT

PAUL DHANENS ARCHITECT expressly reserves its copyright and other property rights in these documents which are not to be reproduced, changed or copied in any written, graphic, electronic or other form or assigned to any third party without the expressed written consent of PAUL DHANENS ARCHITECT.

NOTICE TO CONTRACTORS
Written dimensions on these drawings shall take precedence over scaled dimensions. Contractor shall verify and be responsible for confirming all dimensions and shall notify the architect immediately of any descripancies or field variations discovered.

PROJECT

TENANT IMPROVEMENT FOR

FAMOUS FOR Steak 'n Shake STEAKBURGERS

1966 WEST AVE L
LANCASTER, CA

DATE	ISSUED FOR
9-24-18	BUILDING DEPT SUBMITTAL
6-26-19	

NO.	REVISIONS
1	
2	
3	
4	

PLUMBING

FILE NAME: 2366A2-0

SHEET

P-300

GAS FIRED WATER HEATERS

MARK	LOCATION	INPUT MBH	GPH @ 80 DEGREE RISE	STORAGE CAP	MANUFACTURER	REMARKS
HWH-1	–	199,900	294	100	A.O.SMITH	

EXPANSION TANKS

MARK	LOCATION	SERVES	MINIMUM ACCEPTANCE	WORKING PRESS (PSI)	SIZE (APPROX)	MANUFACTURER	REMARKS
ET-1	–	DOM. HW	4.4	150	11"øx15"	AMTROL	MODEL ST-12

*NOTE: CONTRACTOR SHALL ADJUST PRE-CHARGE OF EXPANSION TANK TO EQUAL INCOMING WATER PRESSURE PRIOR TO INSTALLATION.

PUMPS

MARK	LOCATION	SERVICE	GPM	HEAD (FT.)	MOTOR DATA				RPM	TYPE	MFR.	REMARKS
					HP	VOLTS	PH	CYC.				
P-1	–	DOM. HW	1.5	10.5	1/20	115	1	60	2800	INLINE	B & G	MODEL: NBF-12F/LW

VALVE SCHEDULE

TYPE	MANUFACTURER	THREADED/FLANGED PIPING		SOLDERED/BRAZED PIPING
		2" AND SMALLER	2-1/2" AND LARGER	3" AND SMALLER
GATE	JENKINS	47-C	651-C	1242-C
	MILWAUKEE	148	2885	115
	STOCKHAM	B-100	G-623	B-108
BALL	JENKINS	901A	---	902A
	MILWAUKEE	BA100	---	BA150
	STOCKHAM	S-216-BR1-R-T	---	S-216-BR1-R-S
CHECK	JENKINS	4092	624-C	4093
	MILWAUKEE	509	F2974	1509
	STOCKHAM	B-319	G-931	B-309
AUTOMATIC BALANCING	HAYS	43-45-2510-0.50-P/T	N.A.	N.A.

SYMBOLS

PLUMBING

SYMBOL	DESCRIPTION	SYMBOL	DESCRIPTION	SYMBOL	DESCRIPTION
	SANITARY DRAIN ABOVEGROUND		CLEAN OUT	WC	WATER CLOSET (TANK TYPE)
	SANITARY DRAIN BELOWGROUND		GRADE CLEAN OUT	WC	WATER CLOSET (FLUSH VALVE)
	VENT LINE	N.I.T.C.	NOT IN THIS CONTRACT	UR	URINAL
AV	ACID WASTE	VTR	VENT THROUGH ROOF	LAV	LAVATORY
AV	ACID VENT		VACUUM BREAKER	KS	KITCHEN SINK
WAGD	WASTE ANESTHESIA GAS DISPOSAL		BALL VALVE	SS	SERVICE SINK
S	STORM DRAIN ABOVEGROUND		GLOBE VALVE	CSS	CLINIC SERVICE SINK
S	STORM DRAIN BELOWGROUND		CHECK VALVE	CS	CLASSROOM SINK
	COLD WATER (CW)	P	PRESSURE REGULATING VALVE (PRV)	DF	DRINKING FOUNTAIN
DS	DISTILLED WATER			EWC	ELECTRIC WATER COOLER
DW	DRINKING WATER	P	COMBINATION GAS COCK AND PRESSURE REGULATING VALVE	SH	SHOWER HEAD
DW	DRINKING WATER CIRCULATING			BT	BATH TUB
	HOT WATER (HW)		PRESSURE RELIEF VALVE		
	HOT WATER CIRCULATING (HWC)		STOP AND WASTE VALVE	FHC	FIRE HOSE CABINET
HW 180°	HOT WATER 180°		STOP AND WASTE VALVE (IN RISE)	F-1	SPECIAL FIXTURE NUMBER
HW 180°	HOT WATER CIRCULATING 180°		MIXING VALVE		COLUMN NUMBER
T	TEMPERED WATER		GAS COCK		PLUMBING RISER NUMBER
T	TEMPERED WATER CIRCULATING		FIRE ALARM VALVE (SPRINKLER)	+X"	ROUGH-IN HEIGHT FOR PIPE
F	FIRE LINE				
SM	SPRINKLER MAIN BRANCH		COLD WEATHER VALVE (SPRINKLER)		
	SPRINKLER BRANCH HEADS		WATER MOTOR ALARM (SPRINKLER)		
G	GAS LINE	HB	HOSE BIBB		
A	COMPRESSED AIR LINE	VH	WALL HYDRANT		
V	VACUUM LINE	FH	FIRE HYDRANT		
OX	OXYGEN LINE	MH	MANHOLE		
PN	PNEUMATIC TUBE	SW	STREET WASHER		
CS	COLD SOFT WATER		VALVE IN RISE		
HS	HOT SOFT WATER		EXPANSION JOINT		
HS	HOT SOFT WATER CIRCULATING	RD	ROOF DRAIN		
	UNION	DS	DOWN SPOUT		
	STRAINER	V.C.P.	VITRIFIED CLAY PIPE		
	AUTOMATIC BALANCING VALVE	C.I.	CAST IRON		
	RUNNING TRAP	I.E.	INVERT ELEVATION		

PAUL DHANENS • ARCHITECT

ARCHITECT

LICENSED ARCHITECT PAUL DHANENS NO. C-23843 RENEWAL STATE OF CALIFORNIA

5100 CALIFORNIA AVE., SUITE 107
BAKERSFIELD, CALIFORNIA 93309
TELEPHONE: (661) 326-8936
FACSIMILE: (661) 326-8937

CONSULTANT

COPYRIGHT

PAUL DHANENS ARCHITECT expressly reserves its copyright and other property rights in these documents which are not to be reproduced, changed or copied in any written, graphic or electronic form, nor assigned to any third party without the expressed written consent of PAUL DHANENS ARCHITECT.

NOTICE TO CONTRACTORS
Written dimensions on these drawings shall take precedence over scaled dimensions. Contractor shall verify and be responsible for confirming all dimensions and shall notify the architect immediately of any descripancies or field variations discovered.

PROJECT

TENANT IMPROVEMENT FOR

FAMOUS FOR Steak 'n Shake STEAKBURGERS

1966 WEST AVE L
LANCASTER, CA

DATE	ISSUED FOR
9-24-18	BUILDING DEPT SUBMITTAL
6-26-19	

NO.	REVISIONS

PLUMBING

FILE NAME: 2366A2-0

SHEET

P-301

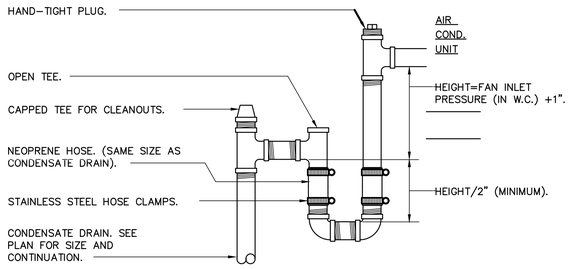

7 PIPE CONDUIT PENETRATION THRU ROOF

NOT TO SCALE

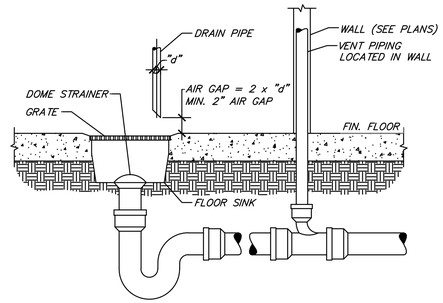

4 FLOOR SINK DETAIL

NOT TO SCALE

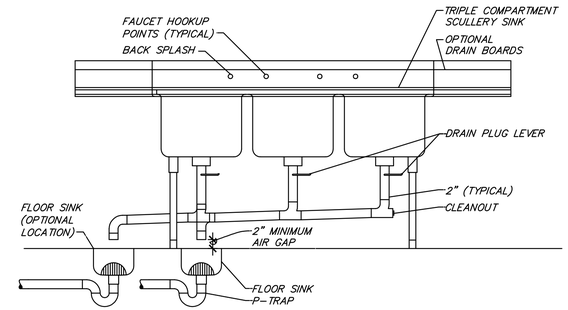

2 THREE COMPARTMENT SINK CONNECTION DETAIL

NOT TO SCALE

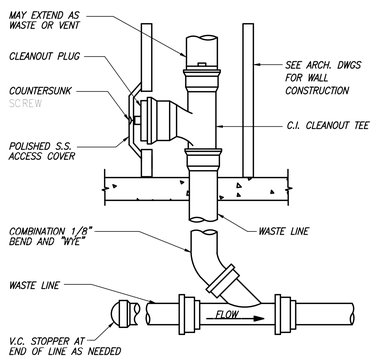

8 WALL CLEANOUT TYPICAL

NOT TO SCALE

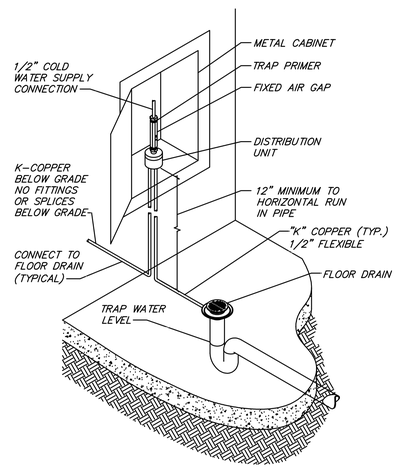

5 FLOOR DRAIN TRAP PRIMER DETAIL

NOT TO SCALE

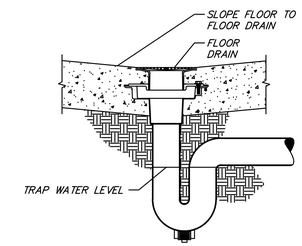

2 FLOOR DRAIN DETAIL

NOT TO SCALE

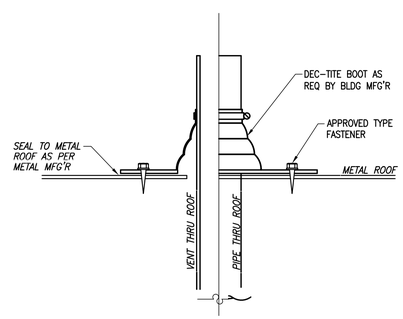

6 VENT TERMINATION LEAD FALSHING

NOT TO SCALE

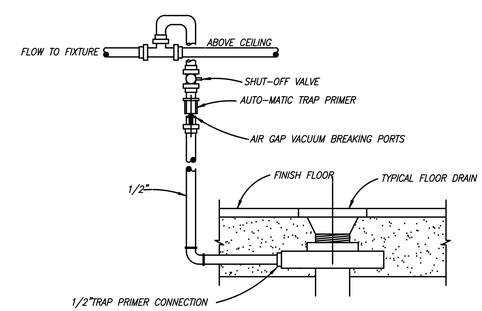

NOTE:
1. PROVIDE 10"x10"FRAMED S.S. ACCESS PANEL W/ CYLINDER LOCK. (CENTER "PRIMER"IN ACCESS PANEL)

3 FLOOR DRAIN TRAP PRIMER DETAIL

NOT TO SCALE

PAUL DHANENS • ARCHITECT

ARCHITECT

PAUL DHANENS ARCHITECT
NO. C-23843
RENEWAL
STATE OF CALIFORNIA

5100 CALIFORNIA AVE., SUITE 107
BAKERSFIELD, CALIFORNIA 93309
TELEPHONE: (661) 326-8336
FACSIMILE: (661) 326-8337

CONSULTANT

COPYRIGHT

PAUL DHANENS ARCHITECT expressly reserves its copyright and other property rights in these documents which are not to be reproduced, changed or copied in any written, graphic or electronic form, nor assigned to any third party without the expressed written consent of PAUL DHANENS ARCHITECT.

NOTICE TO CONTRACTORS
Written dimensions on these drawings shall take precedence over scaled dimensions. Contractor shall verify and be responsible for confirming all dimensions and shall notify the architect immediately of any descripancies or field variations discovered.

PROJECT

TENANT IMPROVEMENT FOR

FAMOUS FOR Steak 'n Shake STEAKBURGERS

1966 WEST AVE L
LANCASTER, CA

DATE	ISSUED FOR
9–24–18	BUILDING DEPT SUBMITTAL
6–26–19	

NO.	REVISIONS
1	
2	
3	
4	

PLUMBING

FILE NAME: 2366A2-0

SHEET

P-400

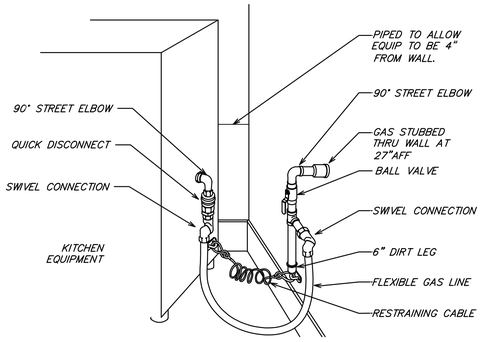

ARRANGEMENT SHOWN IS SCHEMATIC. ADJUST TO SUIT ACTUAL CONDITIONS. MAKE FINAL CONNECTION TO EQUIPMENT AS RECOMMENDED BY MANUFACTURER. PROVIDE WELDED FITTINGS/JOINTS IN ANY CONCEALED, UNSLEEVED LOCATION.

6 KITCHEN GAS EQUIPMENT DETAIL

NOT TO SCALE

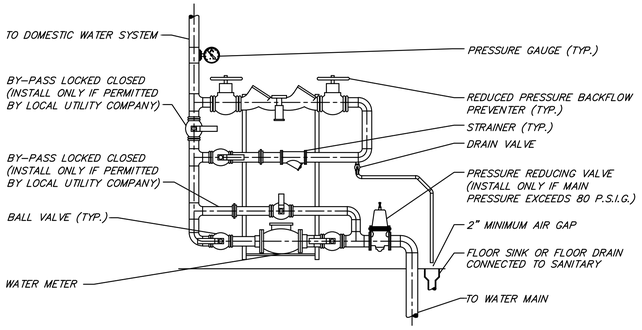

5 DOMESTIC WATER SERVICE DETAIL

NOT TO SCALE

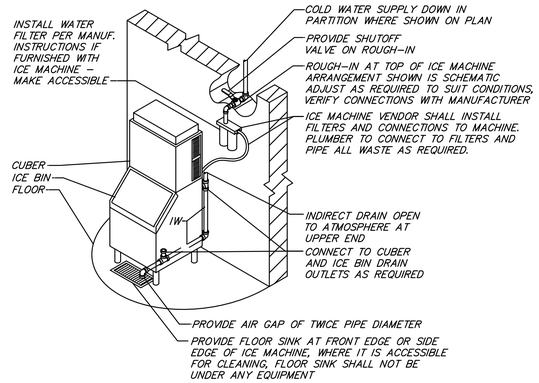

3 ICE MACHINE CONNECTION DETAIL

NOT TO SCALE

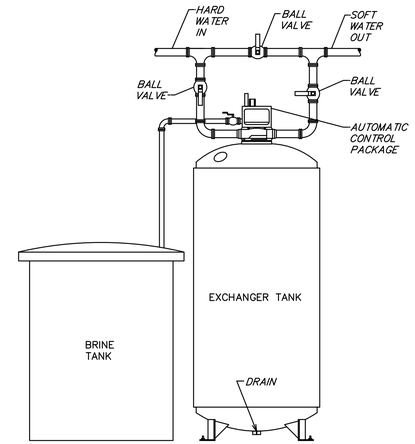

2 AUTOMATIC WATER SOFTENER

NOT TO SCALE

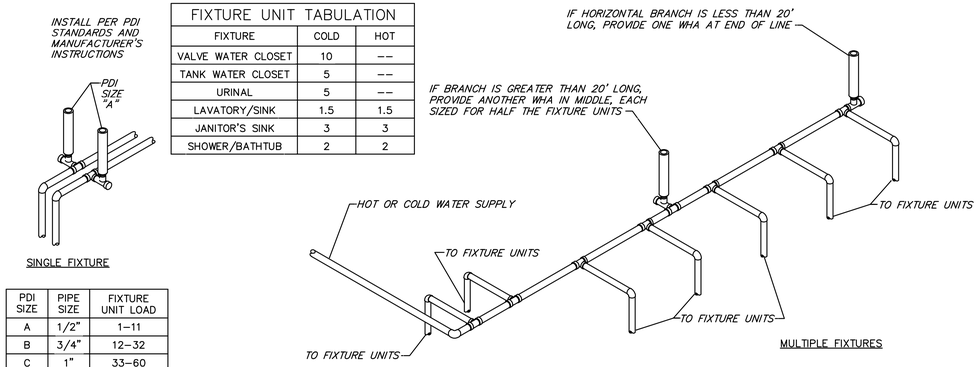

FIXTURE UNIT TABULATION		
FIXTURE	COLD	HOT
VALVE WATER CLOSET	10	--
TANK WATER CLOSET	5	--
URINAL	5	--
LAVATORY/SINK	1.5	1.5
JANITOR'S SINK	3	3
SHOWER/BATHTUB	2	2

PDI SIZE	PIPE SIZE	FIXTURE UNIT LOAD
A	1/2"	1–11
B	3/4"	12–32
C	1"	33–60
D	1–1/4"	61–113
E	1–1/2"	114–154
F	2"	155–330

PLUMBING CONTRACTOR SHALL PROVIDE WATER HAMMER ARRESTERS BY SIOUX CHIEF, PRECISION PLUMBING PRODUCTS, WATTS OR APPROVED EQUIVALENT WITH PISTON AND O-RING CONSTRUCTION, HAVING PDI #WH-201, ASSE #1010 AND ANSI #A112.26.1M CERTIFICATION. INSTALL IN HORIZONTAL OR VERTICAL POSITION, BUT NEVER UPSIDE DOWN. INSTALL IN LINE WITH WATER FLOW DIRECTION IF POSSIBLE. SIZE THE UNITS AS SHOWN ON THE DRAWINGS AND/OR PER THE TABLES SHOWN ABOVE.

4 WATER HAMMER ARRESTERS

NOT TO SCALE

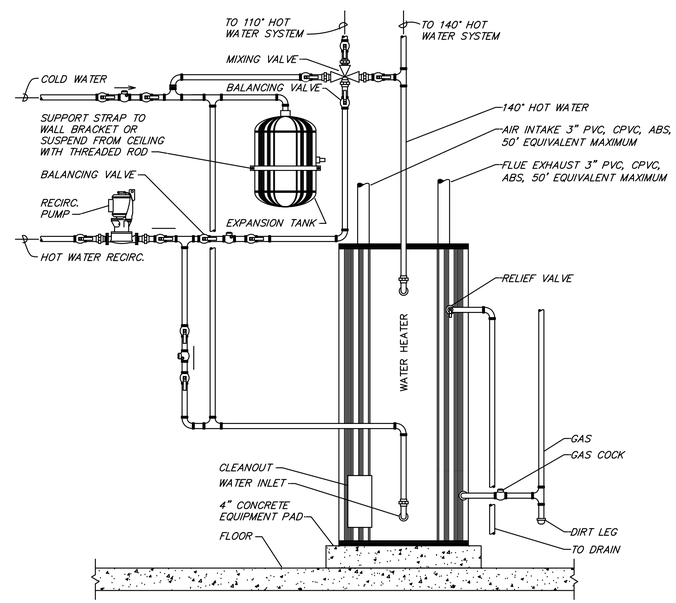

1 WATER HEATER HOOK-UP

NOT TO SCALE

PAUL DHANENS • ARCHITECT

ARCHITECT

PAUL DHANENS
NO. C-23843
RENEWAL
STATE OF CALIFORNIA

5100 CALIFORNIA AVE., SUITE 107
BAKERSFIELD, CALIFORNIA 93309
TELEPHONE: (661) 326-8336
FACSIMILE: (661) 326-8337

CONSULTANT

COPYRIGHT

PAUL DHANENS ARCHITECT expressly reserves its copyright and other property rights in these documents which are not to be reproduced, changed or copied in any written, graphic or electronic form, nor assigned to any third party without the expressed written consent of PAUL DHANENS ARCHITECT.

NOTICE TO CONTRACTORS
Written dimensions on these drawings shall take precedence over scaled dimensions. Contractors shall verify and be responsible for confirming all dimensions and shall notify the architect immediately of any descripancies or field variations discovered.

PROJECT

TENANT IMPROVEMENT FOR

FAMOUS FOR Steak 'n Shake STEAKBURGERS

1966 WEST AVE L
LANCASTER, CA

DATE	ISSUED FOR
9-24-18	BUILDING DEPT SUBMITTAL
6-26-19	

NO.	REVISIONS
△	
△	
△	
△	

PLUMBING

FILE NAME: 2366A2-0

SHEET

P-401

SECTION 22000 – PLUMBING GENERAL CONDITIONS

PART 1 GENERAL

1.01 SUMMARY
- A. This section supplements all sections of the Specifications for Division 22 and shall apply to all phases of work hereinafter specified, shown on the Contract Documents, or required to provide a complete installation of approved plumbing systems.
- B. The Drawings, General Conditions and General Provisions of the Contract apply to this Section and the other Sections of Division 22 of the specifications. Where conflicts arise between these documents, the more stringent provision will be applicable, subject to the interpretation of the Engineer.
- C. Furnish all labor, material, services, and skilled supervision necessary for the construction, erection, installation, connections, testing, and adjustment of all materials and plumbing equipment specified herein, or shown or noted on the Drawings, and its delivery to the Owner, complete in all respects and ready for use.
- D. Products furnished but not installed under this section:
  1. Where plans indicate fixtures or equipment will be furnished by this Contractor for installation by other Contractors, this Contractor shall furnish all such equipment, complete in all respects and ready for installation.
  2. Drawings, instructions, and manuals supplied with equipment furnished under Division 22, but installed under other Divisions shall be carefully preserved and turned over to the installing Contractor.
- E. Products installed but not furnished under this section:
  1. Where plans indicate fixtures or equipment will be furnished by others, this Contractor shall provide all rough–in and supplies and shall connect such equipment to the plumbing systems.
  2. Drawings, instructions, and manuals supplied with equipment furnished under separate Divisions but installed under Division 22 shall be carefully preserved and turned over to the Architect.

1.02 DEFINITIONS
- A. "Work" is hereby defined as, "The construction and services required by the Contract Documents whether completed or partially completed and includes all labor, materials, equipment, and services provided or to be provided by the Contractor to fulfill the Contractor's obligations. The work may constitute the whole or a part of the project."
- B. "Furnish" is hereby defined as, "To supply and deliver, unload, and inspect for damage."
- C. "Install" is hereby defined as, "To unpack, assemble, erect, apply, place, finish, cure, protect, clean, connect, and place into operation into the work."
- D. "Provide" is hereby defined as, "To furnish and install."
- E. "Connect" is hereby defined as, "To bring service to the equipment and make final attachment including necessary switches, outlets, boxes, terminations, etc."
- F. "Concealed" is hereby defined as, "Hidden from sight in chases, furred spaces, shafts, hung ceilings, embedded in construction, in crawl spaces, or buried."
- G. "Exposed" is hereby defined as, "Not installed underground nor concealed as defined by the Specifications."
- H. "Drawings" is hereby defined as, "All plans, details, equipment schedules, diagrams, sketches, etc. issued for the construction of the work."
- I. Subgrade Elevations: 4 inches below finish grade elevations indicated on drawings, unless otherwise indicated.
- J. Finish Grade Elevations: 4 inches above subgrade elevations indicated on drawings, unless otherwise indicated.

1.03 CODES AND STANDARDS
- A. Perform work in accordance with the applicable Building Code, Electrical Code, Fire Code, Mechanical Code, Plumbing Code, Energy Code, and all other applicable codes, amendments, and ordinances. Also perform all work in accordance with the Americans with Disabilities Act (ADA) and the Authority Having Jurisdiction (AHJ) including Fire Marshal(s).
- B. Perform work in accordance with Landlord requirements, including any Tenant Criteria Manuals and Lease Exhibits, where applicable.
- C. Perform work in accordance with the applicable utility companies serving the project. Make all arrangements with the utility companies for proper coordination of the work.
- D. Recognized Standards: Design, manufacture, testing and method of installation of all apparatus and materials furnished under the requirements of these Specifications shall conform to the latest publications or standard rules of Underwriters Laboratories, Inc. (U.L.), American Society for Testing and Materials (ASTM), American National Standards Institute (ANSI), and National Electrical Code (NEC).
- E. The Contract Documents shall take precedence where the Contract Documents exceed code, Landlord, utility, or recognized standards requirements.

1.04 PERMITS AND FEES
- A. Permits, licenses, fees, inspections and arrangements required for the work under this Contract shall be obtained by the Contractor at his expense, unless otherwise indicated.
- B. All fees and scheduling associated with obtaining an accurate water flow test shall be at the Contractor's expense.

1.05 CONTRACT DRAWINGS
- A. The Contractor is responsible to obtain, fully understand, and coordinate the work with the complete set of Contract Documents. Any required corrections, including all associated costs, arising from issues caused by the Contractor's failure to understand and/or coordinate the work with the complete set of Contract Documents are the Contractor's sole responsibility.
- B. Work under these sections is diagrammatic unless indicated otherwise and is intended to convey the scope of work and indicate the general arrangement of piping, equipment, and accessories. Follow these drawings in laying out the work and verify spaces for the installation of these materials and equipment. Wherever a question exists as to the exact intended location of pipe, sprinklers, or equipment, obtain instructions from the Architect before proceeding with the work.
- C. Notify the Architect/Engineer for resolution if a discrepancy is discovered within the Contract Documents. Failure of the Contractor to notify the Architect/Engineer of discrepancies shall result in the resolution becoming the Contractor's responsibility and subject to the Architect/Engineer's review and possible rejection. Should the Architect/Engineer reject a discrepancy resolution of which they were not notified, the Contractor is fully responsible to correct the installation, including all associated costs, until approval of the installation is given by the Architect/Engineer.

1.06 EXISTING CONDITIONS
- A. Verify all existing conditions prior to beginning work.
- B. Any existing conditions indicated in the Contract Documents are based on information drawings provided by others and possibly limited field verification. The Contractor shall adjust for actual field conditions at no additional expense to the Owner.
- C. The Contractor shall visit the project site, review existing conditions against the Contract Documents, and familiarize himself with the work prior to bidding and start of the work. By signing the Contract, the Contractor acknowledges the site visit has been completed and the existing conditions are accepted.
- D. The Contractor shall notify the Architect of major discrepancies in writing so the appropriate modifications to the design can be made without delay to the project. The Contractor assumes full responsibility of adjusting for discrepancies of which the Architect is not informed.
- F. The Owner shall have first salvage right on all demolished equipment and materials. The Contractor shall dispose of all demolished equipment and materials the Owner rejects.
- G. The Contractor shall notify the Architect/Engineer of field discrepancies in writing so the appropriate modifications to the design can be made without delay to the project. The Contractor assumes full responsibility of adjusting for discrepancies of which the Architect/Engineer is not informed.
- H. Where connections are made between new work and existing work, the connections shall be made by using materials and methods to suit the actual conditions.
- I. Where existing conditions are shown to be removed, by means of a hatched pattern, on the Drawings, this Contractor shall perform all work required for removal. Existing pipe run–outs shall be removed all the way back to mains and capped using appropriate methods.
- J. Where existing work is to be modified, it shall be done in conformance with these specifications. Materials used shall be same as existing except where specified otherwise.

1.07 SUBMITTALS
- A. Shop Drawings:
  1. Furnish the Architect/Engineer shop drawing portfolios containing names of manufacturer and cut sheets of equipment to be used on the project. Use manufacturer's specification sheets identified by number indicated on drawings or schedules. Indicate catalog number on the cut sheets. As applicable, provide construction data, weight and dimensional data, performance data and listing data as part of the shop drawing submittal. Provide shop drawings for:
     - a. Plumbing fixtures and equipment.
     - b. Plumbing materials and accessories.
     - c. Product Data: Provide manufacturers catalogue information. Indicate valve data and ratings.
  2. Submittals are reviewed only for general compliance with the Contract Documents. Dimensions, quantities and details are not checked during submittal review. Review of the submittals does not relieve the Contractor of the responsibility for providing all materials, equipment and accessories necessary for a complete and operational system meeting the requirements of the project and the intent of the Contract Documents. The responsibility for coordination of substituted materials and equipment lies solely with the substituting Contractor.
  3. Approval shall not relieve the Contractor from responsibility for errors on the shop drawings.
  4. If the shop drawings deviate from the contract documents, the Contractor shall advise the Engineer of the deviations in writing accompanying the shop drawings, including the reasons for the deviations.
- B. Project Record Documents: Record actual locations of components and tag numbering.
- C. Operation and Maintenance Data: Include installation instructions and spare parts lists.
- D. Maintenance Data: Include assembly drawings, bearing data including replacement sizes, and lubrication instructions.

1.08 QUALITY ASSURANCE
- A. Manufacturer Qualifications: Company specializing in manufacturing the Products specified in this section with minimum five years experience.
- B. Installer Qualifications: Company specializing in performing the work of this section with minimum five years experience. approved by manufacturer.
- C. Products:
  1. Listed and classified by Underwriters Laboratories Inc. as suitable for the purpose specified and indicated.
  2. Listed and classified by the local Department of Buildings and furnished with an acceptance number, where applicable.
  3. Listed and classified by the Landlord's and/or Owner's insurance carrier, where applicable.
- D. All equipment and components shall be free of all rust/corrosion or any visible damage. All items not complying with this requirement shall be replaced without any change in the Contract amount.
- E. Equipment performance and accessories shall be as scheduled on the Drawings and specified herein. Inclusion in both locations is not a prerequisite to inclusion in the Contract. Equipment and accessories specified in either location shall be included in the Contract. Provide all necessary accessories and connections as required for a complete, functional system, including all required components reasonably inferred to as necessary although such components may or may not be specifically indicated in the Contract Documents.
- F. Code or utility company requirements shall supersede any conflicting requirements of this section.
- G. Fill Composition Test Reports: Results of laboratory tests on actual materials used; Compaction Density Test Reports.

1.09 DELIVERY, STORAGE, AND HANDLING
- A. Deliver and store valves in shipping containers, with labeling in place.
- B. Provide temporary protective coating on cast iron and steel valves.
- C. Provide temporary end caps and closures on piping and fittings. Maintain in place until installation.
- D. Protect motors stored on site from weather and moisture by maintaining factory covers and suitable weather–proof covering. For extended outdoor storage, remove motors from equipment and store separately.
- E. Equipment: Protect equipment from physical damage by storing off site until the project is ready for immediate installation. Provide temporary caps on all pipes to prevent debris from entering the pipe.

1.10 WARRANTY AND GUARANTEE
- A. Additional warranty and guarantee terms in excess of this requirement are specified within the individual sections of Division 22.
- B. Provide five year manufacturer warranty for domestic water heaters and packaged water heating systems.
- C. Provide one year manufacturer warranty for pumps.

PART 2 PRODUCTS

2.01 SUBSTITUTIONS
- A. The manufacturers listed are listed to set minimum standards for quality, design, and functionality. The products of other manufacturers may be submitted, at the Contractor's option, during shop drawing review unless indicated otherwise. The products of other manufacturers shall meet or exceed all requirements of the Contract Documents. The Contractor accepts all responsibility for costs and coordination issues arising out of the substitution of materials or equipment, and the coordination of such substitutions with all other contractors and subcontractors.

PART 3 EXECUTION

3.01 COORDINATION OF WORK
- A. Examine the Contract Documents as a whole for the work of other trades. Coordinate all work accordingly.
- B. Work lines and established heights shall be in strict accordance with architectural drawings and specifications insofar as these drawings and specifications extend. Verify all dimensions shown and establish all elevations and detailed dimensions not shown.
- C. Promptly report to the Architect any delay or difficulties encountered in the installation of the work, which might prevent prompt and proper installation, or make it unsuitable to connect with or receive the work of others. Failure to so report shall constitute an acceptance of the work of other trades as being fit and proper for the execution of this work.
- D. Plan, lay out, and coordinate the work with all trades well enough in advance so that it proceeds with a minimum of interference to work that has not been completed and work that is in progress. Inform all trades of openings required for the work and provide all special frames, sleeves, and anchor bolts required. The fire suppression system layout may be altered to suit the conditions, prior to the installation of any work and without additional cost to the Owner. Conflicts arising from lack of coordination shall be this Contractor's responsibility.
- E. Wherever pipe runs in or above ceilings or walls, the Contractor shall arrange the run of pipe in such a manner that it does not interfere with grilles, diffusers, outlet boxes, luminaires, or other ceiling mounted items.
- F. Install systems, materials and equipment to provide for maximum headroom, where no ceiling height is established or indicated on the Drawings. Maintain access to equipment requiring service when selecting mounting elevations.
- G. Install systems, materials and equipment level and plumb, parallel and perpendicular to building lines where exposed to view, unless otherwise indicated.
- H. Conflicts arising from lack of coordination shall be this Contractor's responsibility. The Plumbing Contractor shall pay for all extra cutting and patching made necessary by his failure to properly direct such work at the correct time.
- I. Perform all work in conformity with the Contract Documents and afford other trades reasonable opportunity for the execution of their work. Properly connect and coordinate this work with the work of other trades at such time and in such a manner as not to delay or interfere with their work.
- J. Manufacturer's instruction sheets shall be followed explicitly in the installation of all equipment. Where manufacturer's instruction sheets conflict with requirements of these specifications or the Drawings, such conflicts shall be brought to the attention of the Architect/Engineer for clarification.
- K. All roofing penetrations shall be flashed and weather sealed by the roofing manufacturer's authorized roofing contractor at this Contractor's expense. This Contractor shall contract with the factory authorized roofing contractor for the specific roofing system applicable to this Project. The use of an unauthorized roofing contractor may result in removal and replacement of the penetration systems at this Contractor's expense.
- L. Although all such work is not specifically indicated, furnish and install all supplementary or miscellaneous items, appurtenances and devices incidental to or necessary for a sound, secure and complete installation.
- M. Verify and coordinate all requirements and installation details of all materials and equipment that are to be furnished under other Divisions and installed or connected under Division 22 prior to rough–in. Conflicts arising from lack of coordination shall be this Contractor's responsibility. As such, the Contractor is responsible to:
  1. Obtain and review shop drawings, product data, manufacturer's wiring diagrams, and manufacturer's instructions for equipment furnished under other sections.
  2. Determine connection locations and requirements.
  3. Sequence rough–in of plumbing connections to coordinate with installation of equipment.

3.02 COORDINATION DRAWINGS
- A. Prepare coordination drawings to a scale of 1/4"=1'–0" or larger; detailing major elements, components, and systems of plumbing equipment and materials in locations where space is limited for installation and access and where sequencing and coordination of installations are of importance to the efficient flow of the work, including (but not necessarily limited to) the following:
  1. Indicate the proposed locations of conduits, equipment, and materials. Include the following:
     - a. Clearances required for maintaining Code required working space.
     - b. Equipment connections and support details.
     - c. Exterior wall and foundation penetrations.
     - d. Fire–rated wall and floor penetrations.
     - e. Sizes and location of required concrete pads and bases.
     - f. Indicate scheduling, sequencing, movement, and positioning of large equipment into the building during construction.
     - g. Prepare floor plans, elevations, and details to indicate penetrations in floors, walls, and ceilings and their relationship to other penetrations and installations.

3.03 EXAMINATION
- A. Verify field measurements are as indicated on the Drawings.
- B. Verify all pipe locations and sizes in field prior to fabrication or installation.
- C. Verify all equipment locations in field prior to installation. Coordinate final locations with all trades.

3.04 INTERFACE WITH OTHER PRODUCTS
- A. Install all pipe, equipment, and accessories to preserve fire resistance rating of partitions and other elements, using materials and methods specified.

3.05 FIELD QUALITY CONTROL
- A. Provide tests as necessary to establish the adequacy, quality, safety, completed status, and suitable operation of each system. Tests shall be conducted under the supervision of the Architect.
- B. Install all equipment, devices, pipe, and materials securely and in a neat and workmanlike manner in accordance with all applicable standards and codes.
- C. Install all equipment, pipe, and materials plumb and level and align and adjust for satisfactory operation.
- D. Install all equipment, pipe, and materials in accordance with the manufacturer's instructions and recommendations.
- E. Inspect all equipment, pipe, and materials for defects.

3.06 ERECTION
- A. Rigging:
  1. The Plumbing Contractor shall arrange for all labor and equipment required for the proper installation of the plumbing equipment in the locations indicated on the Drawings. Where crane rental or other erection is required, such costs shall be included in the Plumbing Contract, unless specific arrangements are made with the General Contractor to cover these costs.
- B. Supplemental Framing:
  1. Provide the design, fabrication, and erection of supplementary structural framing required for attachment of hangers or other devices supporting plumbing equipment. Provide framing members of standard rolled steel shapes, A–36 steel. Provide members welded to structural members equal to the specification for the main structural member. Provide "simple beam" type framing with end connections welded or bolted for shear loads. Use cantilevers when detailed or specifically approved by the Architect/Engineer. The Architect/Engineer's approval is required for location of supplementary framing. Use only certified welders. Design framing members for their actual loads, with allowable stresses specified by AISC, without excessive deflection and with consideration for rigidity under vibration, in accordance with standard structural practices. Show on shop drawing supplementary framing, including design loads, member size and location.

3.07 CUTTING, PATCHING, AND PIERCING
- A. Cutting of openings and installation of sleeves or frames through walls and surfaces shall be done in a neat workmanlike manner. Openings shall be cut only as large as required for the installation; sleeves and/or frames installed flush with finished surfaces and grouted in place. Surfaces around openings shall be left smooth and finished to match surrounding surface.
- B. Obtain written permission of the Architect/Engineer before cutting or piercing structural members. Use craftsmen skilled in their respective trades for cutting, fitting, repairing, patching of plaster, and finishing of materials including carpentry work, metal work or concrete work required for this work.
- C. Do not weaken walls, partitions, or floors with cutting. Holes required to be cut in floors must be drilled without breaking out around the holes. The Architect/Engineer will determine suitability of patching and/or refinishing requirements.
- D. The Plumbing Contractor is responsible for patching of all openings resulting from the installation or removal of plumbing equipment or materials.
- E. Provide and maintain temporary partitions or dust barriers adequate to prevent the spread of dust and dirt to adjacent areas.
- F. Patch existing finished surfaces and building components using new materials matching existing materials and experienced Subcontractors.
  - G. Fire and Smoke Partition Penetrations: The Contractor shall familiarize himself with all fire rated construction and install his work so as to maintain the integrity of the fire code rating. Maintain rating of fire rated and smoke rated construction. Seal annular space around conduits. For fire and smoke rated floors, walls and partitions, use UL listed material that maintains fire rated wall and floor integrity.

3.08 CLEANING AND REPAIR
- A. Clean plumbing parts to remove harmful materials.
- B. Clean exposed surfaces of all pipe, equipment, and accessories of all dirt, debris, splatter, and other deleterious materials. Follow the manufacturer's recommendations for cleaning as applicable.
- C. Repair or replace damaged pipe, equipment, and accessories, as directed by and to the satisfaction of the Architect, where marring or disfigurement has occurred. All pipe, equipment, and accessories shall be new.

3.09 TESTING AND INSPECTION
- A. Upon completion, the entire system shall be tested under operating conditions.
  1. All equipment shall be tested under service conditions and proven to operate properly and noiselessly.
  2. All additional tests as required throughout this Specification shall be completed with results reported back to the Architect/Engineer for review.
- B. Operate all equipment, after installation and connection. Inspect for improper connections and operation and correct deficiencies as required.
- C. Inspection:
  1. Upon completion of the work, the Contractor shall obtain certificates of inspection and approval from all City and State Authorities Having Jurisdiction.

3.10 PROJECT CLOSEOUT
- A. Project Record Documents: At project closeout, provide one printed copy and one electronic copy of project record drawings to the Owner. Information contained on project record drawings shall include, as a minimum,:
  1. Actual locations of all pipe, equipment, accessories, etc.
  2. Actual pipe sizes and elevations.
  3. Actual routing of all underfloor or below grade piping.
- B. Operation and Maintenance Data: At project closeout, submit to the Architect two copies of descriptive literature, maintenance and operation data for all piping, equipment, accessories, and materials used. Include maintenance procedures, intervals, and parts list of each item installed under this contract. Include all manufacturer's guarantees and warranties.

END OF SECTION

SECTION 220516 – EXPANSION FITTINGS AND LOOPS FOR PLUMBING PIPING

PART 1 GENERAL

1.01 SECTION INCLUDES
- A. Flexible pipe connectors; Pipe loops, offsets, and swing joints.

PART 2 PRODUCTS

2.01 FLEXIBLE PIPE CONNECTORS – COPPER PIPING
- A. Manufacturer: Mercer Rubber Company; Metraflex Company.
- B. Inner Hose: Bronze; Exterior Sleeve: Braided bronze; Pressure Rating: 125 psi and 450 degrees F; Joint: As specified for pipe joints; Size: Use pipe sized units; Maximum offset: 1 inch on each side of installed center line; Application: Copper piping.

2.02 FLEXIBLE PIPE CONNECTORS – STEEL PIPING
- A. Manufacturer: Mercer Rubber Company; Metraflex Company.
- B. Inner Hose: Pressure Rating: 125 psi and 450 degrees F; Joint: As specified for pipe joints; Size: Use pipe sized units; Maximum offset: 1 inch on each side of installed center line; Application: Steel piping.

PART 3 EXECUTION

3.01 INSTALLATION
- A. Install in accordance with manufacturer's instructions.

PAUL DHANENS • ARCHITECT

ARCHITECT

LICENSED ARCHITECT PAUL DHANENS NO. C–23843 RENEWAL STATE OF CALIFORNIA

5100 CALIFORNIA AVE, SUITE 107
BAKERSFIELD, CALIFORNIA 93309
TELEPHONE: (661) 326–8936
FACSIMILE: (661) 326–8937

CONSULTANT

COPYRIGHT

PAUL DHANENS ARCHITECT expressly reserves its copyright and other property rights in these documents which are not to be reproduced, changed or copied in any written, graphic or electronic form, nor assigned to any third party without the expressed written consent of PAUL DHANENS ARCHITECT.

NOTICE TO CONTRACTORS
Written dimensions on these drawings shall take precedence over scaled dimensions. Contractor shall verify and be responsible for confirming all dimensions and shall notify the architect immediately of any descripencies or field variations discovered.

PROJECT

TENANT IMPROVEMENT FOR

1966 WEST AVE L
LANCASTER, CA

DATE	ISSUED FOR
9–24–18	BUILDING DEPT SUBMITTAL
6–26–19	

NO.	REVISIONS
1	
2	
3	
4	

PLUMBING

FILE NAME: 2366A2-0

SHEET

P-500

B. Install in accordance with EJMA (Expansion Joint Manufacturers Association) Standards.
C. Install flexible pipe connectors on pipes connected to vibration isolated equipment. Provide line size flexible connectors.
D. Install flexible connectors at right angles to displacement. Install one end immediately adjacent to isolated equipment and anchor other end. Install in horizontal plane unless indicated otherwise.
E. Anchor pipe to building structure where indicated and as required to control detrimental movement of piping. Provide pipe guides so movement is directed along axis of pipe only. Erect piping such that strain and weight is not on connections or apparatus.
F. Provide support and equipment required to control expansion and contraction of piping. Provide loops, pipe offsets, and swing joints, or approved expansion joints where required.
G. Contractor may substitute grooved piping for vibration isolated equipment instead of flexible connectors. Grooved piping need not be anchored.

END OF SECTION

SECTION 220519 – METERS AND GAGES FOR PLUMBING PIPING

PART 1 GENERAL

1.01 SECTION INCLUDES
A. Positive displacement meters;
PART 2 PRODUCTS
2.01 Manufacturers: Manufacturers: Dwyer Instruments, Inc; FMC Technologies; Venture Measurement Company; McCrometer; Moeller Instrument Co., Inc; Omega Engineering, Inc.
2.02 POSITIVE DISPLACEMENT METERS (LIQUID)
A. AWWA C700, positive displacement disc type suitable for fluid with bronze case and cast iron frost-proof, breakaway bottom cap, hermetically sealed register, remote reading to AWWA C706.
B. Meter: Brass body turbine meter with magnetic drive register; Accuracy: 1-1/2 percent.

PART 3 EXECUTION

3.01 INSTALLATION
A. Install in accordance with manufacturer's instructions.
B. Provide instruments with scale ranges selected according to service with largest appropriate scale.
C. Install gages and thermometers in locations where they are easily read from normal operating level. Install vertical to 45 degrees off vertical.
D. Adjust gages and thermometers to final angle, clean windows and lenses, and calibrate to zero.
E. Locate test plugs where indicated or required for measurement and balancing of systems.
F. Install positive displacement meters with isolating valves on inlet and outlet. Provide full line size valved bypass with globe valve for liquid service meters unless prohibited by local utility company.

END OF SECTION

SECTION 220548 – VIBRATION AND SEISMIC CONTROLS FOR PLUMBING PIPING AND EQUIPMENT

PART 1 GENERAL

1.01 SECTION INCLUDES
A. Concrete housekeeping pads; Vibration isolators; Seismic restraints.

PART 2 PRODUCTS

2.01 MANUFACTURERS
A. Isolation Technology, Inc.; Kinetics Noise Control, Inc.; Mason Industries.
2.02 BASES
A. Concrete Housekeeping Pad: Construction: Concrete as specified for flooring; Design: 4" high above the surrounding finished flooring and 4" greater in dimension that the equipment supported, or greater if detailed on the Drawings or when indicated.
2.03 VIBRATION ISOLATORS
A. Restrained Open Spring Isolators: Springs: Minimum horizontal stiffness equal to 75 percent vertical stiffness, with working deflection between 0.3 and 0.6 of maximum deflection. Color code springs for load carrying capacity; Spring Mounts: Provide with leveling devices, minimum 0.25 inch thick neoprene sound pads, and zinc chromate plated hardware; Sound Pads: Size for minimum deflection of 0.05 inch; meet requirements for neoprene pad isolators; Restraint: Provide heavy mounting frame and limit stops; For Exterior and Humid Areas: Hot dipped galvanized housings and neoprene coated springs.
B. Spring Hanger: Springs: Minimum horizontal stiffness equal to 75 percent vertical stiffness, with working deflection between 0.3 and 0.6 of maximum deflection. Color code springs for load carrying capacity; Housings: Incorporate neoprene isolation pad meeting requirements for neoprene pad isolators or rubber hanger with threaded insert; Misalignment: Capable of 20 degree hanger rod misalignment; For Exterior and Humid Areas: Hot dipped galvanized housings and neoprene coated springs.
C. Neoprene Pad Isolators: Rubber or neoprene waffle pads; Hardness: 30 durometer; Thickness: Minimum 1/2 inch; Maximum Loading: 50 psi; Rib Height: Maximum 0.7 times width; Configuration: Single layer.
D. Rubber Mount or Hanger: Molded rubber designed for 0.4 inch deflection with threaded insert.
E. Glass Fiber Pads: Neoprene jacketed pre-compressed molded glass fiber.

PART 3 EXECUTION

3.01 INSTALLATION
A. Install in accordance with manufacturer's instructions.
B. Prior to making piping connections to equipment with operating weights substantially different from installed weights, block up equipment with temporary shims to final height. When full load is applied, adjust isolators to load to allow shim removal.
C. Support piping connections to equipment mounted on isolators using isolators or resilient hangers to nearest flexible pipe connector.
D. Provide flexible connections on all piping connections to equipment.
E. Selection of type, thickness and deflection of vibration isolation shall be by the vibration control manufacturer based on the specific equipment type and size, as scheduled on the Drawings and indicated below.

END OF SECTION

SECTION 220595 – FIRE STOPPING FOR PLUMBING SYSTEMS

PART 1 GENERAL

1.01 SECTION INCLUDES
A. Firestopping materials; Firestopping of all penetrations and interruptions to fire rated assemblies, whether indicated on Drawings or not, and other openings indicated.

PART 2 PRODUCTS

2.01 FIRESTOPPING ASSEMBLIES
A. Firestopping: Any material meeting requirements; Fire Ratings: Use any system listed by UL or FM or tested in accordance with ASTM E 814 or ASTM E 119 that has F Rating equal to fire rating of penetrated assembly and minimum T Rating Equal to F Rating and that meets all other specified requirements.
2.02 MATERIALS
A. Manufacturers: A/D Fire Protection Systems Inc; 3M Fire Protection Products; Specified Technologies, Inc.
B. Elastomeric Silicone Firestopping: Single or multiple component silicone elastomeric compound and compatible silicone sealant; conforming to the following: Durability and Longevity: Permanent; Color: Manufacturer's standard color.
C. Foam Firestoppping: Single or multiple component foam compound; conforming to the following: Durability and Longevity: Permanent; Color: Manufacturer's standard color.
D. Fibered Compound Firestopping: Formulated compound mixed with incombustible non-asbestos fibers; conforming to the following: Durability and Longevity: Permanent; Color: Manufacturer's standard color.
E. Fiber Packing Material: Mineral or ceramic fiber packing insulation; conforming to the following: Durability and Longevity: Permanent.
F. Firestop Devices: Mechanical device with incombustible or silicone elastomer filler and sheet stainless steel jacket, collar, and flanged stops; conforming to the following: Durability and Longevity: Permanent; suitable for pedestrian traffic or vehicular traffic where necessary.
G. Firestop Pillows: Formed mineral fiber pillows; conforming to the following: Durability and Longevity: Permanent.
H. Primers, Sleeves, Forms, and Accessories: Type required for tested assembly design.

PART 3 EXECUTION

3.01 EXAMINATION
A. Verify openings are ready to receive the work of this section.
3.02 PREPARATION
A. Clean substrate surfaces of dirt, dust, grease, oil, loose material, or other matter which may affect bond of firestopping material.
B. Install backing materials to arrest liquid material leakage.
3.03 INSTALLATION
A. Install materials in manner described in fire test report and in accordance with manufacturer's instructions, completely closing openings.
B. Do not cover installed firestopping until inspected by authority having jurisdiction.
C. Install labeling required by code.
3.04 CLEANING AND PROTECTION
A. Clean adjacent surfaces of firestopping materials.

END OF SECTION

SECTION 220719 – PLUMBING PIPING INSULATION

PART 1 GENERAL

1.01 SECTION INCLUDES
A. Plumbing piping insulation; Domestic hot and tempered water piping; Domestic cold water piping; Cooling condensate drain piping insulation;

PART 2 PRODUCTS

2.01 REQUIREMENTS FOR ALL PRODUCTS OF THIS SECTION
A. Surface Burning Characteristics: Flame spread/Smoke developed index of 25/50, maximum, when tested in accordance with ASTM E 84, NFPA 255, or UL 723.
B. The Contractor may use any of the following insulating/jacketing materials, at his option, provided the selected material meets with the approval of all State, local authorities and utility company requirements. Verification of compliance of the selected insulating/jacketing material is the sole responsibility of the installing Contractor.
2.02 GLASS FIBER
A. Manufacturers: Knauf Insulation; Johns Manville Corporation; Owens Corning Corp; CertainTeed Corporation.
B. Insulation: ASTM C 547 and ASTM C 795; rigid molded, noncombustible; 'K' value: ASTM C 177, 0.24 at 75 degrees F; Maximum service temperature: 850 degrees F; Maximum moisture absorption: 0.2 percent by volume.
C. Insulation: ASTM C 547 and ASTM C 795; semi-rigid, noncombustible, end grain adhered to jacket; 'K' value: ASTM C 177, 0.24 at 75 degrees F; Maximum service temperature: 650 degrees F; Maximum moisture absorption: 0.2 percent by volume.
D. Vapor Barrier Jacket: White kraft paper with glass fiber yarn, bonded to aluminized film; moisture vapor transmission when tested in accordance with ASTM E 96/E 96M of 0.02 perm-inches.
E. Vapor Barrier Lap Adhesive: Compatible with insulation.
F. Insulating Cement/Mastic: ASTM C 195; hydraulic setting on mineral wool.
G. Fibrous Glass Fabric: Cloth: Untreated; 9 oz/sq yd weight; Blanket: 1.0 lb/cu ft density; Weave: 5x5.
H. Indoor Vapor Barrier Finish: Vinyl emulsion type acrylic, compatible with insulation, white color; Outdoor Vapor Barrier Mastic: Vinyl emulsion type acrylic or mastic, compatible with insulation, black color; Outdoor Breather Mastic: Vinyl emulsion type acrylic or mastic, compatible with insulation, black color.
K. Insulating Cement: ASTM C 449/C 449M.
2.03 FLEXIBLE ELASTOMERIC CELLULAR INSULATION
A. Manufacturer: Armacell International;
B. Insulation: Preformed flexible elastomeric cellular rubber insulation complying with ASTM C 534 Grade 1; use molded tubular material wherever possible; Minimum Service Temperature: -40 degrees F; Maximum Service Temperature: 220 degrees F; Connection: Waterproof vapor barrier adhesive.
C. Elastomeric Foam Adhesive: Air dried, contact adhesive, compatible with insulation.
2.04 JACKETS
A. PVC Plastic.
1. Manufacturers: Knauf Fiber Glass; Johns Manville Corporation; Owens Corning Corp; CertainTeed Corporation.
2. Jacket: One piece molded type fitting covers and sheet material, off-white color; Minimum Service Temperature: 0 degrees F; Maximum Service Temperature: 150 degrees F; Moisture Vapor Permeability: 0.002 perm inch, maximum, when tested in accordance with ASTM E 96/E 96M; Thickness: 10 mil; Connections: Brush on welding adhesive; Covering Adhesive Mastic: Compatible with insulation.
B. ABS Plastic:
1. Jacket: One piece molded type fitting covers and sheet material, off-white color; Minimum Service Temperature: -40 degrees F; Maximum Service Temperature of 180 degrees F; Moisture Vapor Permeability: 0.012 perm inch, when tested in accordance with ASTM E 96/E 96M; Thickness: 30 mil.; Connections: Brush on welding adhesive.
C. Aluminum Jacket: ASTM B 209 (ASTM B 209M) formed aluminum sheet; Thickness: 0.016 inch sheet; Finish: Embossed; Joining: Longitudinal slip joints and 2 inch laps; Fittings: 0.016 inch thick die shaped fitting covers with factory attached protective liner; Metal Jacket Bands: 3/8 inch wide; 0.015 inch thick aluminum; Metal Jacket Bands: 3/8 inch wide; 0.010 inch thick stainless steel.
D. Stainless Steel Jacket: ASTM A 666, Type 304 stainless steel; Thickness: 0.010 inch; Finish: Smooth; Metal Jacket Bands: 3/8 inch wide; 0.010 inch thick stainless steel.

PART 3 EXECUTION

3.01 EXAMINATION
A. Verify that piping has been tested before applying insulation materials.
B. Verify that surfaces are clean and dry, with foreign material removed.
3.02 INSTALLATION
A. Install in accordance with manufacturer's instructions.
B. Install in accordance with NAIMA National Insulation Standards.
C. Exposed Piping: Locate insulation and cover seams in least visible locations.
D. Insulated pipes conveying fluids below ambient temperature: Insulate entire system including fittings, valves, unions, flanges, strainers, flexible connections, and expansion joints.
E. Glass fiber insulated pipes conveying fluids below ambient temperature: Provide vapor barrier jackets, factory-applied or field-applied. Secure with self-sealing longitudinal laps and butt strips with pressure sensitive adhesive. Secure with outward clinch expanding staples and vapor barrier mastic; Insulate fittings, joints, and valves with molded insulation of like material and thickness as adjacent pipe. Finish with glass cloth and vapor barrier adhesive or PVC fitting covers.
F. For hot piping conveying fluids 140 degrees F or less, do not insulate flanges and unions at equipment, but bevel and seal ends of insulation.
G. For hot piping conveying fluids over 140 degrees F, insulate flanges and unions at equipment.
H. Glass fiber insulated pipes conveying fluids above ambient temperature: Provide standard jackets, with or without vapor barrier, factory-applied or field-applied. Secure with self-sealing longitudinal laps and butt strips with pressure sensitive adhesive. Secure with outward clinch expanding staples; Insulate fittings, joints, and valves with insulation of like material and thickness as adjoining pipe. Finish with glass cloth and adhesive or PVC fitting covers.
I. Inserts and Shields: Application: Piping 2 inches diameter or larger; Shields: Galvanized steel between pipe hangers or pipe hanger rolls and inserts; Insert location: Between support shield and piping and under the finish jacket; Insert configuration: Minimum 6 inches long, of same thickness and contour as adjoining insulation; may be factory fabricated; Insert material: Hydrous calcium silicate insulation or other heavy density insulating material suitable for the planned temperature range.
J. Continue insulation through walls, sleeves, pipe hangers, and other pipe penetrations. Finish at supports, protrusions, and interruptions. At fire separations, fire stop penetrations to meet local code requirements.
K. Pipe Exposed in Finished Spaces (less than 10 feet above finished floor): Finish with Aluminum, Stainless Steel, ABS or PVC jacket and fitting covers.
3.03 SCHEDULES
A. The Contractor may use any of the following insulating materials, at his option, provided the selected material meets with the approval of all State, local authorities and utility company requirements. Verification of compliance of the selected insulating material and thickness with all State and local codes and utility company requirements is the sole responsibility of the installing Contractor.
B. Plumbing Systems:
1. Domestic Hot and Tempered Water Supply and Recirculation:
a. Glass Fiber Insulation: All Pipe: Thickness: 1 inch.
b. Flexible Elastomeric Cellular Foam Insulation: Pipe Size Range: First 8 feet of pipe from fixture, up to 1 1/4 inch: Thickness: 1/2 inch.; All Other Pipe: Thickness: 1 inch.
2. Domestic Cold Water:
a. Glass Fiber Insulation: Pipe Size Range: All Sizes; Thickness: 1/2 inch.
b. Flexible Elastomeric Cellular Foam Insulation: Pipe Size Range: All Sizes; Thickness: 1/2 inch.
3. Cold Condensate Drains:
a. Glass Fiber Insulation: Pipe Size Range: All Sizes; Thickness: 1/2 inch.
b. Flexible Elastomeric Cellular Foam Insulation: Pipe Size Range: All Sizes; Thickness: 1/2 inch.
F. Other Systems:
1. Existing piping in plenum return:
a. Wrap all new and existing storm, sanitary, vent piping and all other combustible material with wrap that meets the following surface Burning Characteristics: Flame spread/Smoke developed index of 25/50, maximum, when tested in accordance with ASTM E 84, NFPA 255, UL 723 or as required by local jurisdiction.

END OF SECTION

SECTION 220720 – PIPING SAFETY COVERS

PART 1 GENERAL

1.01 SECTION INCLUDES
A. Piping Safety Covers.

PART 2 PRODUCTS

2.01 MANUFACTURERS
A. Acceptable Manufacturer: Truebro, Inc.
2.02 PIPING INSULATION ACCESSORIES
A. Provide products that comply with the following: Americans With Disabilities Act (ADA), Article 4.19.4; ANSI/ICC A117.1, American National Standard for Accessible Buildings and Facilities; Requirements of applicable building code.
B. Piping Safety Covers: Truebro Lav-Guard; Characteristics: Three-piece molded assembly, minimum 1/8 inch wall thickness, with internal ribs to provide air space between piping and piping insulation jacket, molded to receive manufacturer's snap-clip fasteners; Vinyl Material: Impact-resistant and stain-resistant molded closed-cell anti-microbial vinyl compound, UV-stable, non-fading, non yellowing; having the following performance characteristics: Burning Characteristics: 0 seconds Average Time of Burning (ATB), 0 mm Area of Burning (AEB), when tested in accordance with ASTM D 635; Thermal Conductivity: K-value 1.17, when tested in accordance with ASTM C 177; Indentation Hardness: 60, minimum, when tested in accordance with ASTM D 2240, using Type A durometer; Trap Assembly Cover: Three-piece assembly, with removable clean-out nut enclosure; Angle Stop Covers: Formed with hinged cap for access to valve without requiring cover removal; Configurations: In accordance with manufacturer's product data for project piping configurations indicated on Drawings; Color: China White, gloss finish; paintable; Fasteners: Manufacturer's standard re-usable snap-clip fasteners; wire-tie fasteners not permitted

PART 3 EXECUTION

3.01 EXAMINATION
A. Verify that piping configurations are correct type for piping cover component configurations specified.
3.02 INSTALLATION
A. Install products of this section in accordance with manufacturer's printed installation instructions.
3.03 PROTECTION OF INSTALLED PRODUCTS
A. Do not allow damage to installed products by subsequent construction activities; protect products until Substantial Completion. Replace any damaged products prior to occupancy.

END OF SECTION

SECTION 221005 – PLUMBING PIPING

PART 1 GENERAL

1.01 SECTION INCLUDES
A. Pipe, pipe fittings, valves, and connections for piping systems: Sanitary sewer, interior; Sanitary sewer, exterior; Domestic water, interior; Domestic and fire service water, exterior; Storm water, interior; Storm water, exterior; Natural gas, interior.

PART 2 PRODUCTS

2.01 The Contractor may use any of the following piping materials, at his option, provided the selected material meets with the approval of all State and local authorities and utility company requirements. Verification of compliance of the selected piping material with local requirements is the sole responsibility of the installing Contractor. Verify the use of plastic piping systems with the local jurisdiction. Non-metallic piping systems may not be used in any return air plenum ceiling spaces. No exceptions.
2.02 SANITARY SEWER PIPING, BURIED BEYOND 5 FEET OF BUILDING
A. Cast Iron Pipe: ASTM A 74 service weight; Fittings: Cast iron; Joint Seals: ASTM C 564 neoprene gaskets, or lead and oakum.
B. Vitrified Clay Pipe: ASTM C 700, Standard Strength; Fittings: Clay; Joints: Bell-and-spigot, with ASTM C 425 compression joint device.
C. ABS Pipe: ASTM D 2751, ASTM F 628, ASTM D2661, or ASTM D2751; Fittings: ABS; Joints: Solvent welded with ASTM D 2235 cement.
2.03 SANITARY SEWER PIPING, BURIED WITHIN 5 FEET OF BUILDING
A. Cast Iron Pipe: ASTM A 74 service weight; Fittings: Cast iron; Joints: Hub-and-spigot, CISPI HSN compression type with ASTM C 564 neoprene gaskets or lead and oakum.
B. ABS Pipe: ASTM D 2751, ASTM F 628, ASTM D2661, or ASTM D2751; Fittings: ABS; Joints: Solvent welded with ASTM D 2235 cement.
2.04 SANITARY SEWER PIPING, ABOVE GRADE
A. Cast Iron Pipe: ASTM A 74, service weight; Fittings: Cast iron; Joint Seals: ASTM C 564 neoprene gaskets, or lead and oakum.
B. Cast Iron Pipe: CISPI 301, hubless, service weight; Fittings: Cast iron; Joints: CISPI 310, neoprene gaskets and stainless steel clamp-and-shield assemblies.
2.06 WATER PIPING, BURIED BEYOND 5 FEET OF BUILDING
A. Ductile Iron Pipe: AWWA C151/A21.51; Fittings: AWWA C110, ductile or gray iron, standard thickness; Joints: AWWA C111/A21.11, rubber gasket with 3/4 inch diameter rods.
B. Copper Pipe: ASTM B 42, hard drawn; Fittings: ASME B16.18, cast copper alloy or ASME B16.22 wrought copper and bronze; Joints: ASTM B 32, alloy Sn95 solder.
2.07 WATER PIPING, BURIED WITHIN 5 FEET OF BUILDING
A. Copper Pipe: ASTM B 42, hard drawn; Fittings: ASME B16.18, cast copper alloy or ASME B16.22 wrought copper and bronze; Joints: ASTM B 32, alloy Sn95 solder.
B. Ductile Iron Pipe: AWWA C151/A21.51; Fittings: Ductile or gray iron, standard thickness; Joints: AWWA C111/A21.11, rubber gasket with 3/4 inch diameter rods.
2.08 WATER PIPING, ABOVE GRADE
A. Copper Tube: ASTM B 88 (ASTM B 88M), Type L (B), Drawn (H); Fittings: ASME B16.18, cast copper alloy or ASME B16.22, wrought copper and bronze; Fittings: Cast iron, coated; Joints: ASTM B 32, alloy Sn95 solder; Joints: Grooved mechanical couplings.
2.09 STORM WATER PIPING, BURIED BEYOND 5 FEET OF BUILDING
A. Cast Iron Pipe: ASTM A 74 service weight; Fittings: Cast iron; Joint Seals: ASTM C 564 neoprene gaskets, or lead and oakum.
B. PVC Pipe: ASTM D 3034 SDR 35; Fittings: PVC; Joints: Push-on, using ASTM F 477 elastomeric gaskets.
2.10 STORM WATER PIPING, BURIED WITHIN 5 FEET OF BUILDING
A. Cast Iron Pipe: ASTM A 74 service weight; Fittings: Cast iron; Joint Seals: ASTM C 564 neoprene gaskets, or lead and oakum.
B. PVC Pipe: ASTM D 2665, ASTM D 3034, or ASTM F 679; Fittings: PVC; Joints:

PAUL DHANENS • ARCHITECT

ARCHITECT

REGISTERED PROFESSIONAL ENGINEER PAUL DHANENS NO. C-23843 RENEWAL STATE OF CALIFORNIA

5100 CALIFORNIA AVE., SUITE 107
BAKERSFIELD, CALIFORNIA 93309
TELEPHONE: (661) 326-8336
FACSIMILE: (661) 326-8337

CONSULTANT

COPYRIGHT

PAUL DHANENS ARCHITECT expressly reserves its copyright and other property rights in these documents which are not to be reproduced, changed or copied in any written, graphic or electronic form, nor assigned to any third party without the expressed written consent of PAUL DHANENS ARCHITECT.

NOTICE TO CONTRACTORS
Written dimensions on these drawings shall take precedence over scaled dimensions. Contractors shall verify and be responsible for confirming all dimensions and shall notify the architect immediately of any descrepancies or field variations discovered.

PROJECT

TENANT IMPROVEMENT FOR

FAMOUS FOR Steak n Shake STEAKBURGERS

1966 WEST AVE L
LANCASTER, CA

DATE	ISSUED FOR
9-24-18	BUILDING DEPT SUBMITTAL
6-26-19	

NO.	REVISIONS
1	
2	
3	
4	

PLUMBING

FILE NAME: 2366A2-0

SHEET

P-501

Push-on, using ASTM F 477 elastomeric gaskets.

2.11 STORM WATER PIPING, ABOVE GRADE
A. Cast Iron Pipe: CISPI 301, hubless, service weight; Fittings: Cast iron; Joints: Neoprene gaskets and stainless steel clamp-and-shield assemblies.
D. ABS Pipe: ASTM D 2680 or ASTM D 2751; Fittings: ABS; Joints: Solvent welded with ASTM D 2235 cement.

2.14 NATURAL GAS PIPING, ABOVE GRADE
A. Steel Pipe: ASTM A 53/A 53M Schedule 40 black; Fittings: 3" and larger shall be ASME B16.3, malleable iron, or ASTM A 234/A 234M, wrought steel welding type. Threaded fittings may be used on piping 2 1/2" and smaller, except where noted on the drawings or required by code to be welded; Joints: NFPA 54, threaded or welded to ASME B31.1.
B. Copper Tube: ASTM B 88 (ASTM B 88M), Type K (A) or L (B) annealed; Fittings: ASME B16.26, cast bronze; Joints: Flared.

2.18 FLANGES, UNIONS, AND COUPLINGS
A. Unions for Pipe Sizes 3 Inches and Under: Ferrous pipe: Class 150 malleable iron threaded unions; Copper tube and pipe: Class 150 bronze unions with soldered joints.
B. Flanges for Pipe Size Over 1 Inch: Ferrous pipe: Class 150 malleable iron threaded or forged steel slip-on flanges; preformed neoprene gaskets; Copper tube and pipe: Class 150 slip-on bronze flanges; preformed neoprene gaskets.
C. Grooved and Shouldered Pipe End Couplings: Housing: Malleable iron clamps to engage and lock, designed to permit some angular deflection, contraction, and expansion; steel bolts, nuts, and washers; galvanized for galvanized pipe; Sealing gasket: "C" shape composition sealing gasket.
D. Dielectric Connections: Union with galvanized or plated steel threaded end, copper solder end, water impervious isolation barrier.

2.19 PIPE HANGERS AND SUPPORTS
A. Plumbing Piping - Drain, Waste, and Vent: Conform to MSS SP-58; Hangers for Pipe Sizes 1/2 Inch to 1-1/2 Inches: Malleable iron, adjustable swivel, split ring; Hangers for Pipe Sizes 2 Inches and Over: Carbon steel, adjustable, clevis; Multiple or Trapeze Hangers: Steel channels with welded spacers and hanger rods; Wall Support for Pipe Sizes to 3 Inches: Cast iron hook; Wall Support for Pipe Sizes 4 Inches and Over: Welded steel bracket and wrought steel clamp; Vertical Support: Steel riser clamp; Floor Support: Cast iron adjustable pipe saddle, lock nut, nipple, floor flange, and concrete pier or steel support; Copper Pipe Support: Carbon steel ring, adjustable, copper plated.
B. Plumbing Piping - Water and Gas: Conform to MSS SP-58; Hangers for Pipe Sizes 1/2 Inch to 1-1/2 Inches: Malleable iron, adjustable swivel, split ring; Hangers for Cold Pipe Sizes 2 Inches and Over: Carbon steel, adjustable, clevis; Hangers for Hot Pipe Sizes 2 Inches to 4 Inches: Carbon steel, adjustable, clevis; Hangers for Hot Pipe Sizes 6 Inches and Over: Adjustable steel yoke, cast iron pipe roll, double hanger; Multiple or Trapeze Hangers: Steel channels with welded supports or spacers and hanger rods; Multiple or Trapeze Hangers for Hot Pipe Sizes 6 Inches and Over: Steel channels with welded supports or spacers and hanger rods, cast iron roll; Wall Support for Pipe Sizes to 3 Inches: Cast iron hook; Wall Support for Pipe Sizes 4 Inches and Over: Welded steel bracket and wrought steel clamp; Wall Support for Hot Pipe Sizes 6 Inches and Over: Welded steel bracket and wrought steel clamp with adjustable steel yoke and cast iron pipe roll; Vertical Support: Steel riser clamp; Floor Support for Cold Pipe: Cast iron adjustable pipe saddle, lock nut, nipple, floor flange, and concrete pier or steel support; Floor Support for Hot Pipe Sizes to 4 Inches: Cast iron adjustable pipe saddle, locknut, nipple, floor flange, and concrete pier or steel support; Floor Support for Hot Pipe Sizes 6 Inches and Over: Adjustable cast iron pipe roll and stand, steel screws, and concrete pier or steel support; Copper Pipe Support: Carbon steel ring, adjustable, copper plated.

2.20 GATE VALVES (Exterior Utility Service Only)
A. Manufacturers: Conbraco Industries; Nibco, Inc; Milwaukee Valve Company.
B. Up To and Including 3 Inches: MSS SP-80, Class 125, bronze body, bronze trim, rising stem, handwheel, inside screw, solid wedge disc, solder or threaded ends. Provide extension to grade and valve box per local jurisdiction and utility company standards. Post-indicator type were used for fire protection service or when indicated on the Drawings.
C. 2 Inches and Larger: MSS SP-70, Class 125, iron body, bronze trim, outside screw and yoke, handwheel, solid wedge disc, flanged ends. Provide extension to grade and valve box per local jurisdiction and utility company standards. Post-indicator type were used for fire protection service or when indicated on the Drawings.

2.22 BALL VALVES
A. Manufacturers: Conbraco Industries; Nibco, Inc; Milwaukee Valve Company.
B. Construction, 4 Inches and Smaller: MSS SP-110, Class 150, 400 psi CWP, bronze, two piece body, chrome plated brass ball, regular port, teflon seats and stuffing box ring, blow-out proof stem, lever handle, solder or threaded ends.

2.24 BUTTERFLY VALVES
A. Manufacturers: Hammond Valve; Crane Co; Milwaukee Valve Company.
B. Construction 1-1/2 Inches and Larger: MSS SP-67, 200 psi CWP, cast or ductile iron body, nickel-plated ductile iron disc, resilient replaceable EPDM seat, wafer, lug, or grooved ends, extended neck, 10 position lever handle.
C. Provide gear operators for valves 8 inches and larger, and chain-wheel operators for valves mounted over 8 feet above floor.

2.25 FLOW CONTROLS
A. Manufacturers: ITT Bell & Gossett; Griswold Controls; Taco, Inc.
B. Construction: Class 125, Brass or bronze body with union on inlet, temperature and pressure test plug on inlet and outlet.
C. Calibration: Automatically control flow within 5 percent of selected rating, over operating pressure range of 10 times minimum pressure required for control, maximum minimum pressure 3.5 psi.

2.26 SWING CHECK VALVES
A. Manufacturers: Hammond Valve; Nibco, Inc; Milwaukee Valve Company.
B. Up to 3 Inches: MSS SP-80, Class 125, bronze body and cap, bronze swing disc with rubber seat, solder or threaded ends.
C. Over 2 Inches: MSS SP-71, Class 125, iron body, bronze swing disc, renewable disc seal and seat, flanged or grooved ends.

2.28 WATER PRESSURE REDUCING VALVES
A. Manufacturers: Amtrol Inc; Cla-Val Co; Watts Regulator Company.
B. Up to 2 Inches: MSS SP-80, bronze body, stainless steel and thermoplastic internal parts, fabric reinforced diaphragm, strainer, threaded single union ends.
C. Over 2 Inches: MSS SP-85, cast iron body, bronze fitted, elastomeric diaphragm and seat disc, flanged.

2.29 RELIEF VALVES
A. Pressure Relief: Manufacturers: Cla-Val Co; Henry Technologies; Watts Regulator Company; AGA Z21.22 certified, bronze body, teflon seat, steel stem and springs, automatic, direct pressure actuated.
B. Temperature and Pressure Relief: Manufacturers: Cla-Val Co; Henry Technologies; Watts Regulator Company; AGA Z21.22 certified, bronze body, teflon seat, stainless steel stem and springs, automatic, direct pressure actuated, temperature relief maximum 210 degrees F, capacity ASME (BPV IV) certified and labeled.

2.30 STRAINERS
A. Manufacturers: Armstrong International, Inc; Green Country Filtration; WEAMCO.
B. Size 2 inch and Under: Threaded brass body for 175 psi CWP, Y pattern with 1/32 inch stainless steel perforated screen.
2. Class 150, threaded bronze body 300 psi CWP, Y pattern with 1/32 inch stainless steel perforated screen.
C. Size 1-1/2 inch to 4 inch: Class 125, flanged iron body, Y pattern with 1/16 inch stainless steel perforated screen.
D. Size 5 inch and Larger: Class 125, flanged iron body, basket pattern with 1/8 inch stainless steel perforated screen.

PART 3 EXECUTION

3.01 EXAMINATION
A. Verify that excavations are to required grade, dry, and not over-excavated.

3.02 PREPARATION
A. Ream pipe and tube ends. Remove burrs. Bevel plain end ferrous pipe.
B. Remove scale and dirt, on inside and outside, before assembly.
C. Prepare piping connections to equipment with flanges or unions.

3.03 INSTALLATION
A. Install in accordance with manufacturer's instructions.
B. Provide non-conducting dielectric connections wherever jointing dissimilar metals.
C. Route piping in orderly manner and maintain gradient. Route parallel and perpendicular to walls.
D. Install piping to maintain headroom, conserve space, and not interfere with use of space.
E. Group piping whenever practical at common elevations.
F. Install piping to allow for expansion and contraction without stressing pipe, joints, or connected equipment.
G. Provide clearance in hangers and from structure and other equipment for installation of insulation and access to valves and fittings.
H. Locate all valves and control elements in accessible areas wherever possible to avoid access doors. Provide access where valves and fittings are not exposed or located in accessible areas. Provide ceiling access doors for access to all valves and control elements located above inaccessible ceiling areas. Provide minimum 12 x 12 inch size for hand access, 18 x 18 inch size for shoulder access, and as indicated. Provide 4 x 4 inch for shut off valves only. Provide rated access doors where installed in fire rated construction. Review locations prior to fabrication.
I. Establish elevations of buried piping outside the building to ensure not less than the maximum local frost depth cover. Install tracer wire on all plastic piping outside the building.
J. Install vent piping penetrating roofed areas to maintain integrity of roof assembly.
K. All roofing penetrations shall be flashed and weather sealed by the roofing manufacturer's authorized roofing contractor at this Contractor's expense. This Contractor shall contract with the factory authorized roofing contractor for the specific roofing system applicable to this Project. The use of an unauthorized roofing contractor may result in removal and replacement of the penetration systems at this Contractor's expense.
L. All sanitary vent system terminations shall be a minimum of ten feet from any fresh air intake and twenty-five feet on medical facilities (hospitals, clinics, etc.)
M. Where pipe support members are welded to structural building framing, scrape, brush clean, and apply one coat of zinc rich primer to welding.
N. Provide support for utility meters in accordance with requirements of utility companies.
O. Prepare exposed, unfinished pipe, fittings, supports, and accessories ready for finish painting.
P. Paint all exterior above grade piping with a minimum of two coats of paint, color to match roof or wall surface to which it is attached; Copper pipe Apply vinyl etch primer immediately following cleaning. EXT 5.5A Alkyd: Vinyl Wash Primer MPI #80, Alkyd MPI #8, 9 or 94, Semi-gloss; Steel pipe: Apply alkyd metal primer immediately following cleaning. EXT 5.1D Alkyd: Alkyd Metal Primer MPI #79, Alkyd MPI # 94, semi-gloss; Plastic pipe: Apply alkyd bonding primer immediately following cleaning. EXT 6.8B Alkyd: Bonding Primer MPI #17 or 69, Alkyd MPI #8, 9 or 94.
Q. Excavate, bedding and backfill shall be in accordance with applicable sections of this Specification.
R. Pipe vents from gas pressure reducing valves to outdoors and terminate in weather proof hood, unless of the ventless design and approved by the local jurisdiction and the local utility company regulates.
S. The use of sanitary tee fittings will not be permitted. Utilize wye fittings in lieu of tee fittings for all intersections of drainage piping.
T. Provide sleeves when penetrating footings, masonry walls and floors. Seal and fire stop pipe and sleeve penetrations to achieve fire resistance equivalent to fire separation required. All penetrations through footings and floors shall be sealed water tight.
U. Whereever piping is located within 1.5 inches of the nearest edge of studs, joists, rafters or similar members, provide minimum 0.062 inch thick steel protective shield plates extending 2" above and below the pipe being protected. Shield plates may be omitted on cost iron piping only.
V. Inserts: Provide inserts for placement in concrete formwork; Provide inserts for suspending hangers from reinforced concrete slabs and sides of reinforced concrete beams; Provide hooked rod to concrete reinforcement section for inserts carrying pipe over 4 inches; Where concrete slabs form finished ceiling, locate inserts flush with slab surface; Where inserts are omitted, drill through concrete slab from below and provide through-bolt with recessed square steel plate and nut recessed into and grouted flush with slab.
W. Pipe Hangers and Supports: Install in accordance with ASME B31.9, ASTM F 708, and MSS SP-89; Support horizontal piping as scheduled; Install hangers to provide minimum 1/2 inch space between finished covering and adjacent work; Place hangers within 12 inches of each horizontal elbow; Use hangers with 1-1/2 inch minimum vertical adjustment. Design hangers for pipe movement without disengagement of supported pipe; Support vertical piping at every other floor. Support riser piping independently of connected horizontal piping; Where several pipes can be installed in parallel and at same elevation, provide multiple or trapeze hangers; Provide copper plated hangers and supports for copper piping; Prime coat exposed steel hangers and supports. Hangers and supports located in crawl spaces, pipe shafts, and suspended ceiling spaces are not considered exposed; Provide hangers adjacent to motor driven equipment with vibration isolation; Support cast iron drainage piping at every joint.

3.04 APPLICATION
A. Install unions downstream of valves and at equipment or apparatus connections.
B. Install ball or butterfly valves for shut-off and to isolate equipment, part of systems, or vertical risers.
C. Install globe, ball, or butterfly valves for throttling, bypass, or manual flow control services.
D. Provide lug end butterfly valves adjacent to equipment when provided to isolate equipment.
E. Provide spring loaded check valves on discharge of water pumps.
F. Provide plug or gas service rated ball valves in natural gas systems for shut-off service.
G. Provide plug or gas service rated ball valves in propane gas systems for shut-off service.
H. Provide automatic flow controls valves in water recirculating systems where indicated.
I. Provide spring loaded check valves when located on the discharge of pumps.

3.05 TOLERANCES
A. Interior Drainage Piping: Establish invert elevations within 1/2 inch vertically of location indicated and slope to drain at minimum of 1/4 inch per foot slope, unless noted otherwise on the Drawings.
B. Exterior Drainage Piping: Establish invert elevations within 1/2 inch vertically of location indicated and slope to drain at a minimum of 1% grade, unless noted otherwise on the Drawings. Verify all invert elevations prior to commencing work.
C. Water Piping: Slope at minimum of 1/32 inch per foot and arrange to drain at low points.

3.06 DISINFECTION OF DOMESTIC WATER PIPING SYSTEM
A. Prior to starting work, verify system is complete, flushed and clean.
B. Ensure Ph of water to be treated is between 7.4 and 7.6 by adding alkali (caustic soda or soda ash) or acid (hydrochloric).
C. Inject disinfectant, free chlorine in liquid, powder, tablet or gas form, throughout system to obtain 50 to 80 mg/L residual.
D. Bleed water from outlets to ensure distribution and test for disinfectant residual at minimum 15 percent of outlets.
E. Maintain disinfectant in system for 24 hours.
F. If final disinfectant residual tests less than 25 mg/L, repeat treatment.
G. Flush disinfectant from system until residual equal to that of incoming water or 1.0 mg/L.
H. Take samples no sooner than 24 hours after flushing, from 10 percent of outlets and from water entry, and analyze in accordance with AWWA C651.

3.07 SERVICE CONNECTIONS
A. Provide new sanitary and storm sewer services as indicated on the Drawings. Before commencing work check invert elevations required for sewer connections, confirm inverts and ensure that these can be properly connected with slope for drainage and cover to avoid freezing. Removal, rework or corrections to sewer services as a result of the Contractor's failure to confirm invert elevations prior to the start of construction, regardless of the information contained on the Drawings, shall be the sole responsibility of the Contractor. Report any discrepancies difficulties to the Engineer prior to the start of construction.
B. Provide new water service complete with approved reduced pressure backflow preventer and water meter with by-pass valves (where permitted by local authorities), pressure reducing valve (where pressure exceeds 80 psi); Provide sleeve in wall for service main and support at wall with reinforced concrete bridge. Calk enlarged sleeve and make watertight with pliable material. Anchor service main inside to concrete wall; Provide 18 gage galvanized sheet metal sleeve around service main to 2 inches above floor and 3 feet minimum below grade. Size for minimum of 2 inches of loose batt insulation stuffing.
C. Provide new gas services complete with gas meter and regulators. Gas service distribution piping shall have initial minimum pressure as indicated on the drawings. Provide appropriately sized regulators on each line serving gas appliances, sized in accordance with the manufacturers recommendations based on the sizing parameters indicated on the Drawings. The entire gas service and piping installation shall comply with the local jurisdiction and the regulations of the serving utility.

3.08 SCHEDULES
A. Pipe Hanger Spacing:
1. Metal Piping:
a. Pipe size: 1/2 inches to 1-1/4 inches: Maximum hanger spacing: 6.5 ft; Hanger rod diameter: 3/8 inches.
b. Pipe size: 1-1/2 inches to 2 inches: Maximum hanger spacing: 10 ft; Hanger rod diameter: 3/8 inch.
c. Pipe size: 2-1/2 inches to 3 inches: Maximum hanger spacing: 10 ft; Hanger rod diameter: 1/2 inch.
d. Pipe size: 4 inches to 6 inches: Maximum hanger spacing: 10 ft; Hanger rod diameter: 5/8 inch.
2. Plastic Piping:
a. Pipe size: 1/2 inches to 6 inches: Maximum hanger spacing: 6 ft; Hanger rod diameter: 3/8 inch.

END OF SECTION

SECTION 221006 - PLUMBING PIPING SPECIALTIES

PART 1 GENERAL

1.01 SECTION INCLUDES
A. Drains; Cleanouts; Hose bibbs; Hydrants; Backwater valves; Backflow preventers; Water hammer arrestors; Interceptors; Thermostatic mixing valves.

PART 2 PRODUCTS

2.01 BACK WATER VALVES
A. Manufacturers: Jay R. Smith Manufacturing Company; Savko Plastic Pipe & Fittings, Inc; Zurn Industries.
B. Cast Iron Back Water Valves: ANSI A112.21.2M; lacquered cast iron body and cover, brass valve, extension sleeve, and access cover.
C. Plastic Back Water Valves: ABS or PVC body and valve, extension sleeve, and access cover.

2.02 BACKFLOW PREVENTERS
A. Manufacturers: Conbraco Industries; Watts Regulator Company; Zurn Industries, Inc.

2.03 WATER HAMMER ARRESTORS
A. Manufacturers: Jay R. Smith Manufacturing Company; Watts Regulator Company; Zurn Industries, Inc.
B. Water Hammer Arrestors: Stainless steel or copper construction, bellows type sized in accordance with PDI-WH 201, precharged suitable for operation in temperature range 34 to 250 degrees F and maximum 150 psi working pressure.

PART 3 EXECUTION

3.01 INSTALLATION
A. Install in accordance with manufacturer's instructions.
B. Extend cleanouts to finished floor or wall surface. Lubricate threaded cleanout plugs with mixture of graphite and linseed oil. Ensure clearance at cleanout for rodding of drainage system.
C. Encase exterior cleanouts in concrete flush with grade.
D. Install floor cleanouts at elevation to accommodate finished floor for a completely flush installation.
E. Install approved potable water protection devices on plumbing lines where contamination of domestic water may occur; on boiler feed water lines, janitor rooms, fire sprinkler systems, premise isolation, irrigation systems, flush valves, drink mixing stations, interior and exterior hose bibbs and all other locations required by Codes.
F. Pipe relief from backflow preventer to nearest drain.
G. Install water hammer arrestors complete with accessible isolation valve on hot and cold water supply piping to all fixtures and equipment.

END OF SECTION

SECTION 223000 - PLUMBING EQUIPMENT

PART 1 GENERAL

1.01 SECTION INCLUDES
A. Water Heaters; Commercial gas fired water heaters; Commercial gas fired instantaneous water heaters; Commercial electric water heaters; Electric instantaneous water heaters; Water softeners; Pumps; Circulators; Sewage Ejectors; Sump Pumps; Water pressure booster system.

PART 2 PRODUCTS

2.01 WATER HEATER MANUFACTURERS
A. A.O. Smith Water Products Co.; Bock Water Heaters, Inc.; Rheem Manufacturing Company.; PVI.

2.02 COMMERCIAL GAS FIRED WATER HEATERS
A. Type: Automatic, natural gas-fired, vertical storage
B. Performance: Maximum working pressure: 150 psig; Equipment performance and accessories shall be as scheduled on the Drawings and specified herein. Inclusion in both locations is not a prerequisite to inclusion in the Contract. Equipment and accessories specified in either location shall be included in the Contract. Provide all necessary accessories and connections as required for a complete, functional system.
C. Tank: Glass or copper lined welded steel ASME labeled when required by code; multiple flue passages, 4 inch diameter inspection port, thermally insulated with minimum 2 inches polyurethane, encased in corrosion-resistant steel jacket; baked-on enamel finish; floor shield and legs.
D. Accessories: Brass water connections and dip tube, drain valve, magnesium anode, and ASME rated temperature and pressure relief valve and heat trap fittings for hot and cold water connections; Water Connections: Brass; Dip tube: Crosslinked polyethylene (PEX) or brass; Drain Valve; Anode: Magnesium; Temperature and Pressure Relief Valve: ASME labeled.
E. Certification: As automatic storage water heater and for operation at 180 degrees F (82 degrees C) for operation on combustible floors.
F. Controls: Automatic water thermostat with temperature range adjustable from 110 to 180 degrees F (43 to 82 degrees C), automatic reset high temperature limiting thermostat factory set at 195 degrees F, gas pressure regulator, multi-ribbon or tubular burner, 100 percent safety shut-off pilot and thermocouple, flue baffle and draft hood.

2.03 COMMERCIAL GAS FIRED INSTANTANEOUS WATER HEATERS
A. Type: Automatic, natural gas-fired, fully modulating, tankless.
B. Performance: Maximum working pressure: 150 psig (1000 kPa); Equipment performance and accessories shall be as scheduled on the Drawings and specified herein. Inclusion in both locations is not a prerequisite to inclusion in the Contract. Equipment and accessories specified in either location shall be included in the Contract. Provide all necessary accessories and connections as required for a complete, functional system.
C. Accessories: Brass or bronze water connections and waterways, integral flow regulator, and ASME rated temperature and pressure relief valve and heat trap fittings for hot and cold water connections; Water Connections: Brass; Coil: Copper; Burners: Stainless steel.
D. Certification: As automatic fully modulating tankless water heater and for operation at 180 degrees F (82 degrees C) for operation on combustible floors.
E. Controls: Automatic water thermostat with temperature range adjustable from 110 to 180 degrees F (43 to 82 degrees C), automatic reset high temperature limiting thermostat factory at 195 degrees F (90 degrees C), gas pressure regulator, 100 percent safety shut-off pilot and thermocouple, flue baffle and draft hood.

2.04 COMMERCIAL ELECTRIC WATER HEATERS
A. Type: Factory-assembled and wired, electric, vertical or horizontal storage as specified.
B. Performance: Maximum working pressure: 150 psig; Equipment performance and accessories shall be as scheduled on the Drawings and specified herein. Inclusion in both locations is not a prerequisite to inclusion in the Contract. Equipment and accessories specified in either location shall be included in the Contract. Provide all necessary accessories and connections as required for a complete, functional system.
C. Electrical Characteristics: As indicated on the Drawings; Verify that proper power supply is available prior to ordering equipment. Verify proper voltage, phase and current rating of power supply and inform Engineer of any deviations prior to order, connection of equipment or start-up. Responsibility for verification of proper power supply voltage and any product returns or damage resulting from incorrect connections shall rest with this Contractor.
D. Tank: Glass lined or copper lined welded steel; ASME labeled pressure vessel when required by code, 4 inch diameter inspection port, thermally insulated with minimum 2 inches polyurethane encased in corrosion-resistant steel jacket; baked-on enamel finish.
E. Controls: Automatic immersion water thermostat; externally adjustable temperature range from 60 to 180 degrees F, flanged or screw-in nichrome elements, high temperature limit thermostat.
F. Accessories: Brass water connections and dip tube, drain valve, magnesium anode, and ASME rated temperature and pressure relief valve and heat trap fittings for hot and cold water connections; Water connections: Brass; Dip tube: Crosslinked polyethylene (PEX) or brass; Drain Valve; Anode: Magnesium; Temperature and Pressure Relief Valve: ASME labeled.
G. Controls: Ventilated control cabinet, factory-wired with solid state progressive sequencing step controller, fuses, magnetic contactors, control transformer, pilot lights indicating main power and heating steps, control circuit toggle switch, electronic low-water (probe-type) cut-off, high temperature limit thermostat, flush-mounted temperature and pressure gages.
H. Heating Elements: Flange-mounted immersion elements; individual elements sheathed

Hanger rod diameter: 3/8 inch.

END OF SECTION

SECTION 221006 - PLUMBING PIPING SPECIALTIES

PART 1 GENERAL

1.01 SECTION INCLUDES
A. Drains; Cleanouts; Hose bibbs; Hydrants; Backwater valves; Backflow preventers; Water hammer arrestors; Interceptors; Thermostatic mixing valves.

PART 2 PRODUCTS

2.01 BACK WATER VALVES
A. Manufacturers: Jay R. Smith Manufacturing Company; Savko Plastic Pipe & Fittings, Inc; Zurn Industries.
B. Cast Iron Back Water Valves: ANSI A112.21.2M; lacquered cast iron body and cover, brass valve, extension sleeve, and access cover.
C. Plastic Back Water Valves: ABS or PVC body and valve, extension sleeve, and access cover.

2.02 BACKFLOW PREVENTERS
A. Manufacturers: Conbraco Industries; Watts Regulator Company; Zurn Industries, Inc.

2.03 WATER HAMMER ARRESTORS
A. Manufacturers: Jay R. Smith Manufacturing Company; Watts Regulator Company; Zurn Industries, Inc.
B. Water Hammer Arrestors: Stainless steel or copper construction, bellows type sized in accordance with PDI-WH 201, precharged suitable for operation in temperature range 34 to 250 degrees F and maximum 150 psi working pressure.

PART 3 EXECUTION

3.01 INSTALLATION
A. Install in accordance with manufacturer's instructions.
B. Extend cleanouts to finished floor or wall surface. Lubricate threaded cleanout plugs with mixture of graphite and linseed oil. Ensure clearance at cleanout for rodding of drainage system.
C. Encase exterior cleanouts in concrete flush with grade.
D. Install floor cleanouts at elevation to accommodate finished floor for a completely flush installation.
E. Install approved potable water protection devices on plumbing lines where contamination of domestic water may occur; on boiler feed water lines, janitor rooms, fire sprinkler systems, premise isolation, irrigation systems, flush valves, drink mixing stations, interior and exterior hose bibbs and all other locations required by Codes.
F. Pipe relief from backflow preventer to nearest drain.
G. Install water hammer arrestors complete with accessible isolation valve on hot and cold water supply piping to all fixtures and equipment.

END OF SECTION

SECTION 223000 - PLUMBING EQUIPMENT

PART 1 GENERAL

1.01 SECTION INCLUDES
A. Water Heaters; Commercial gas fired water heaters; Commercial gas fired instantaneous water heaters; Commercial electric water heaters; Electric instantaneous water heaters; Water softeners; Pumps; Circulators; Sewage Ejectors; Sump Pumps; Water pressure booster system.

PART 2 PRODUCTS

2.01 WATER HEATER MANUFACTURERS
A. A.O. Smith Water Products Co.; Bock Water Heaters, Inc.; Rheem Manufacturing Company.; PVI.

2.02 COMMERCIAL GAS FIRED WATER HEATERS
A. Type: Automatic, natural gas-fired, vertical storage
B. Performance: Maximum working pressure: 150 psig; Equipment performance and accessories shall be as scheduled on the Drawings and specified herein. Inclusion in both locations is not a prerequisite to inclusion in the Contract. Equipment and accessories specified in either location shall be included in the Contract. Provide all necessary accessories and connections as required for a complete, functional system.
C. Tank: Glass or copper lined welded steel ASME labeled when required by code; multiple flue passages, 4 inch diameter inspection port, thermally insulated with minimum 2 inches polyurethane, encased in corrosion-resistant steel jacket; baked-on enamel finish; floor shield and legs.
D. Accessories: Brass water connections and dip tube, drain valve, magnesium anode, and ASME rated temperature and pressure relief valve and heat trap fittings for hot and cold water connections; Water Connections: Brass; Dip tube: Crosslinked polyethylene (PEX) or brass; Drain Valve; Anode: Magnesium; Temperature and Pressure Relief Valve: ASME labeled.
E. Certification: As automatic storage water heater and for operation at 180 degrees F (82 degrees C) for operation on combustible floors.
F. Controls: Automatic water thermostat with temperature range adjustable from 110 to 180 degrees F (43 to 82 degrees C), automatic reset high temperature limiting thermostat factory set at 195 degrees F, gas pressure regulator, multi-ribbon or tubular burner, 100 percent safety shut-off pilot and thermocouple, flue baffle and draft hood.

2.03 COMMERCIAL GAS FIRED INSTANTANEOUS WATER HEATERS
A. Type: Automatic, natural gas-fired, fully modulating, tankless.
B. Performance: Maximum working pressure: 150 psig (1000 kPa); Equipment performance and accessories shall be as scheduled on the Drawings and specified herein. Inclusion in both locations is not a prerequisite to inclusion in the Contract. Equipment and accessories specified in either location shall be included in the Contract. Provide all necessary accessories and connections as required for a complete, functional system.
C. Accessories: Brass or bronze water connections and waterways, integral flow regulator, and ASME rated temperature and pressure relief valve and heat trap fittings for hot and cold water connections; Water Connections: Brass; Coil: Copper; Burners: Stainless steel.
D. Certification: As automatic fully modulating tankless water heater and for operation at 180 degrees F (82 degrees C) for operation on combustible floors.
E. Controls: Automatic water thermostat with temperature range adjustable from 110 to 180 degrees F (43 to 82 degrees C), automatic reset high temperature limiting thermostat factory at 195 degrees F (90 degrees C), gas pressure regulator, 100 percent safety shut-off pilot and thermocouple, flue baffle and draft hood.

2.04 COMMERCIAL ELECTRIC WATER HEATERS
A. Type: Factory-assembled and wired, electric, vertical or horizontal storage as specified.
B. Performance: Maximum working pressure: 150 psig; Equipment performance and accessories shall be as scheduled on the Drawings and specified herein. Inclusion in both locations is not a prerequisite to inclusion in the Contract. Equipment and accessories specified in either location shall be included in the Contract. Provide all necessary accessories and connections as required for a complete, functional system.
C. Electrical Characteristics: As indicated on the Drawings; Verify that proper power supply is available prior to ordering equipment. Verify proper voltage, phase and current rating of power supply and inform Engineer of any deviations prior to order, connection of equipment or start-up. Responsibility for verification of proper power supply voltage and any product returns or damage resulting from incorrect connections shall rest with this Contractor.
D. Tank: Glass lined or copper lined welded steel; ASME labeled pressure vessel when required by code, 4 inch diameter inspection port, thermally insulated with minimum 2 inches polyurethane encased in corrosion-resistant steel jacket; baked-on enamel finish.
E. Controls: Automatic immersion water thermostat; externally adjustable temperature range from 60 to 180 degrees F, flanged or screw-in nichrome elements, high temperature limit thermostat.
F. Accessories: Brass water connections and dip tube, drain valve, magnesium anode, and ASME rated temperature and pressure relief valve and heat trap fittings for hot and cold water connections; Water connections: Brass; Dip tube: Crosslinked polyethylene (PEX) or brass; Drain Valve; Anode: Magnesium; Temperature and Pressure Relief Valve: ASME labeled.
G. Controls: Ventilated control cabinet, factory-wired with solid state progressive sequencing step controller, fuses, magnetic contactors, control transformer, pilot lights indicating main power and heating steps, control circuit toggle switch, electronic low-water (probe-type) cut-off, high temperature limit thermostat, flush-mounted temperature and pressure gages.
H. Heating Elements: Flange-mounted immersion elements; individual elements sheathed

PAUL DHANENS • ARCHITECT

ARCHITECT

REGISTERED ARCHITECT
PAUL DHANENS
NO. C-23843
RENEWAL
STATE OF CALIFORNIA

5100 CALIFORNIA AVE., SUITE 107
BAKERSFIELD, CALIFORNIA 93309
TELEPHONE: (661) 326-8336
FACSIMILE: (661) 326-8337

CONSULTANT

COPYRIGHT

PAUL DHANENS ARCHITECT expressly reserves its copyright and other property rights in these documents which are not to be reproduced, changed or copied in any written, graphic or electronic form, nor assigned to any third party without the expressed written consent of PAUL DHANENS ARCHITECT.

NOTICE TO CONTRACTORS
Written dimensions on these drawings shall take precedence over scaled dimensions. Contractor shall verify and be responsible for confirming all dimensions and shall notify the architect immediately of any descrepancies or field variations discovered.

PROJECT

TENANT IMPROVEMENT FOR

FAMOUS FOR Steak 'n Shake STEAKBURGERS

1966 WEST AVE L
LANCASTER, CA

DATE	ISSUED FOR
9-24-18	BUILDING DEPT SUBMITTAL
6-26-19	

NO.	REVISIONS
△	
△	
△	
△	

PLUMBING

FILE NAME: 2366A2-0

SHEET

P-502

with Incoloy corrosion-resistant metal alloy, rated less than 75 Watts per square inch.

2.06 WATER SOFTENERS
- A. Manufacturers: Culligan International Company; Sterling Water Systems, LLC.
- B. Performance: Equipment performance and accessories shall be as scheduled on the Drawings and specified herein. Inclusion in both locations is not a prerequisite to inclusion in the Contract. Equipment and accessories specified in either location shall be included in the Contract. Provide all necessary accessories and connections as required for a complete, functional system; Electrical Characteristics: As indicated on the Drawings.
- C. Control: Brass control valve cycled to regenerate from one to twelve day period.

2.07 IN-LINE CIRCULATOR PUMPS
- A. Manufacturers: Armstrong Pumps Inc; ITT Bell & Gossett; Sterling Fluid Systems; Taco, Inc..
- B. Casing: Bronze, rated for 125 psig working pressure; Impeller: Bronze; Shaft: Alloy steel with integral thrust collar and two oil lubricated bronze sleeve bearings; Seal: Carbon rotating against a stationary ceramic seat; Drive: Flexible coupling.
- C. Performance: Equipment performance and accessories shall be as scheduled on the Drawings and specified herein. Inclusion in both locations is not a prerequisite to inclusion in the Contract. Equipment and accessories specified in either location shall be included in the Contract. Provide all necessary accessories and connections as required for a complete, functional system; Electrical Characteristics: As indicated on the Drawings; Verify that proper power supply is available prior to ordering equipment. Verify proper voltage, phase and current rating of power supply and inform Engineer of any deviations prior to order, connection of equipment or start-up. Responsibility for verification of proper power supply voltage and any product returns or damage resulting from incorrect connections shall rest with this Contractor.

PART 3 EXECUTION

3.01 INSTALLATION
- A. Install plumbing equipment in accordance with manufacturer's instructions, as required by code, and complying with conditions of certification, if any.
- B. Provide concrete equipment bases for all floor mounted plumbing equipment.
- C. Coordinate with plumbing piping and related fuel piping, gas venting, and electrical work as applicable to achieve operating system.
- D. Pumps:
  1. Ensure shaft length allows sump pumps to be located minimum 24 inches below lowest invert into sump pit and minimum 6 inches clearance from bottom of sump pit.
  2. Provide air cock and drain connection on horizontal pump casings.
  3. Provide line sized isolating valve and strainer on suction and line sized soft seated check valve and balancing valve on discharge.
  4. Decrease from line size with long radius reducing elbows or reducers. Support piping adjacent to pump such that no weight is carried on pump casings. Provide supports under elbows on pump suction and discharge line sizes 4 inches and over.
  5. Ensure pumps operate at specified system fluid temperatures without vapor binding and cavitation, are non-overloading in parallel or individual operation, and operate within 25 percent of midpoint of published maximum efficiency curve.
  6. Align and verify alignment of base mounted pumps prior to start-up.
  7. Verify that proper power supply is available prior to ordering equipment. Verify proper voltage, phase and current rating of power supply and inform Engineer of any deviations prior to order, connection of equipment or start-up. Responsibility for verification of proper power supply voltage and any product returns or damage resulting from incorrect connections shall rest with this Contractor.
  8. Refer to vibration isolation requirements specified in Vibration Isolation section of this Specification.

END OF SECTION

SECTION 224000 – PLUMBING FIXTURES

PART 1 GENERAL

1.01 SECTION INCLUDES
- A. All plumbing fixtures as scheduled on the Drawings.

PART 3 EXECUTION

3.01 EXAMINATION
- A. Verify that walls and floor finishes are prepared and ready for installation of fixtures.
- B. Verify that electric power is available and of the correct characteristics.

3.02 PREPARATION
- A. Rough-in fixture piping connections in accordance with minimum sizes indicated in fixture rough-in schedule for particular fixtures.

3.03 INSTALLATION
- A. Install each fixture with trap, easily removable for servicing and cleaning.
- B. Install each fixture using brass angle ball stop valves for hot and cold water connections as applicable. Non-metallic valves or non-ball valve type stops will not be accepted.
- C. Provide chrome plated rigid or flexible supplies to fixtures with specified stops, reducers, and escutcheons.
- D. Install components level and plumb.
- E. Install and secure fixtures in place with wall carriers, wall supports and bolts.
- F. Seal fixtures to wall and floor surfaces with sealant, color to match fixture.
- G. Solidly attach floor mounted water closets to floor with lag screws. Lead flashing is not intended hold fixture in place.
- H. Install fixtures and fittings in accordance with the manufacturer's instructions and in accordance with the ICC (IPC) or UPC.
- I. When fixtures require both hot water and cold water supplies, provide the hot water supply to the left of the cold water supply.
- J. Install off-the-floor supports to conform to ASME A112.6.1M.

3.04 INTERFACE WITH WORK OF OTHER SECTIONS
- A. Review millwork shop drawings. Confirm location and size of fixtures and openings before rough-in and installation.

3.05 CLEANING
- A. Clean plumbing fixtures and equipment.

3.06 PROTECTION
- A. Protect installed products from damage due to subsequent construction operations.
- B. Repair or replace damaged products before date of Substantial Completion.

3.07 FIELD INSPECTION
- A. Continue inspection during installation and testing.
- B. Correct or replace all rejected equipment prior to installation.

END OF SECTION

PAUL DHANENS • ARCHITECT

ARCHITECT

PAUL DHANENS
NO. C-23843
RENEWAL
STATE OF CALIFORNIA

5100 CALIFORNIA AVE., SUITE 107
BAKERSFIELD, CALIFORNIA 93309
TELEPHONE: (661) 326-8936
FACSIMILE: (661) 326-8937

CONSULTANT

COPYRIGHT

PAUL DHANENS ARCHITECT expressly reserves its copyright and other property rights in these documents which are not to be reproduced, changed or copied in any written, graphic or electronic form, nor assigned to any third party without the expressed written consent of PAUL DHANENS ARCHITECT.

NOTICE TO CONTRACTORS
Written dimensions on these drawings shall take precedence over scaled dimensions. Contractors shall verify and be responsible for confirming all dimensions, and shall notify the architect immediately of any descripancies or field variations discovered.

PROJECT

TENANT IMPROVEMENT
FOR

FAMOUS FOR Steak 'n Shake STEAKBURGERS

1966 WEST AVE L
LANCASTER, CA

DATE	ISSUED FOR
9-24-18	BUILDING DEPT SUBMITTAL
6-26-19	

NO.	REVISIONS
1	
2	
3	
4	

PLUMBING

FILE NAME: 2366A2-0

SHEET

P-503

Project Name:	Steak n Shake	NRCC-PRF-01-E	Page 1 of 20
Project Address:	1966 WEST AVE L LANCASTER	Calculation Date/Time:	00:51, Thu, Jun 27, 2019
Compliance Scope:	NewComplete	Input File Name:	Steak and Shake.cibd16x

A. PROJECT GENERAL INFORMATION

1.	Project Location (city)	LANCASTER	8.	Standards Version	Compliance2016
2.	CA Zip Code		9.	Compliance Software (version)	EnergyPro 7.2
3.	Climate Zone	14	10.	Weather File	LANCASTER_723816_CZ2010.epw
4.	Total Conditioned Floor Area in Scope	3,144 ft²	11.	Building Orientation (deg)	(N) 0 deg
5.	Total Unconditioned Floor Area	0 ft²	12.	Permitted Scope of Work	NewComplete
6.	Total # of Stories (Habitable Above Grade)	1	13	Building Type(s)	Nonresidential
7.	Total # of dwelling units	0	14	Gas Type	NaturalGas

B. COMPLIANCE RESULTS FOR PERFORMANCE COMPONENTS (Annual TDV Energy Use, kBtu/ft ²-yr) § 140.1

BUILDING COMPLIES

1. Energy Component	2. Standard Design (TDV)	3. Proposed Design (TDV)	4. Compliance Margin (TDV)	5. Percent Better than Standard
Space Heating	3.92	3.63	0.29	7.4%
Space Cooling	106.33	106.68	-0.35	-0.3%
Indoor Fans	96.70	81.16	15.54	16.1%
Heat Rejection	--	--	--	--
Pumps & Misc.	--	--	--	--
Domestic Hot Water	9.08	6.59	2.49	27.4%
Indoor Lighting	101.67	101.70	-0.03	0.0%
COMPLIANCE TOTAL	**317.70**	**299.76**	**17.94**	**5.6%**
Receptacle	89.34	89.34	0.0	0.0%
Process	67.78	67.78	0.0	0.0%
Other Ltg	--	--	--	--
Process Motors	--	--	--	--
TOTAL	**474.82**	**456.88**	**17.9**	**3.8%**

Project Name:	Steak n Shake	NRCC-PRF-01-E	Page 2 of 20
Project Address:	1966 WEST AVE L LANCASTER	Calculation Date/Time:	00:51, Thu, Jun 27, 2019
Compliance Scope:	NewComplete	Input File Name:	Steak and Shake.cibd16x

C. PRIORITY PLAN CHECK/ INSPECTION ITEMS (in order of highest to lowest TDV energy savings)

1st	Indoor Fans: Check envelope and mechanical
2nd	Domestic Hot Water: Check mechanical
3rd	Space Heating: Check envelope and mechanical
4th	Heat Rejection: Check envelope and mechanical
5th	Pumps & Misc.: Check mechanical
6th	Indoor Lighting: Check lighting
7th	Space Cooling: Check envelope and mechanical

Compliance Margin By Energy Component (from Table B column 4)

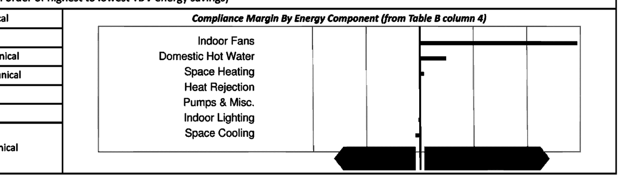

D. EXCEPTIONAL CONDITIONS

This project uses the Simplified Geometry Performance Modeling Approach which is not capable of modeling daylighting controls and assumes the prescriptive Secondary Daylit Control requirements are met. PRESCRIPTIVE COMPLIANCE documentation (form NRCC-LTI-02-E) for the requirements of section 140.6(d) Automatic Daylighting Controls in Secondary Daylit Zones is required.

This project includes Domestic Hot Water in the analysis. Please verify that Domestic Hot Water is included in the design for the permitted scope of work.

E. HERS VERIFICATION

This Section Does Not Apply

F. ADDITIONAL REMARKS

Standard Building (Compliance)

Project Name:	Steak n Shake	NRCC-PRF-01-E	Page 3 of 20
Project Address:	1966 WEST AVE L LANCASTER	Calculation Date/Time:	00:51, Thu, Jun 27, 2019
Compliance Scope:	NewComplete	Input File Name:	Steak and Shake.cibd16x

G. COMPLIANCE PATH & CERTIFICATE OF COMPLIANCE SUMMARY

Identify which building components use the performance or prescriptive path for compliance. "NA"= not in project
For components that utilize the performance path, indicate the sheet number that includes mandatory notes on plans.

Building Component	Compliance Path	Compliance Forms *(required for submittal)*	Location of Mandatory Notes on Plans
Envelope	☒ Performance	NRCC-PRF-ENV-DETAILS (section of the NRCC-PRF-01-E)	
	☐ Prescriptive	NRCC-ENV-01 / 02 / 03 / 04 / 05 / 06-E	
	☐ NA		
Mechanical	☒ Performance	NRCC-PRF-MCH-DETAILS (section of the NRCC-PRF-01-E)	
	☐ Prescriptive	NRCC-MCH-01 / 02 / 03 / 04 / 05 / 06 / 07-E	
	☐ NA		
Domestic Hot Water	☒ Performance	NRCC-PRF-PLB-DETAILS (section of the NRCC-PRF-01-E)	
	☐ Prescriptive	NRCC-PLB-01-E	
	☐ NA		
Lighting (Indoor Conditioned)	☒ Performance	NRCC-PRF-LTI-DETAILS (section of the NRCC-PRF-01-E)	
	☐ Prescriptive	NRCC-LTI-01 / 02 / 03 / 04 / 05-E	
	☐ NA		
Covered Process: Commercial Kitchens	☐ Performance	S2 (section of the NRCC-PRF-01-E)	
	☐ Prescriptive	NRCC-PRC-01/ 03-E	
	☒ NA		
Covered Process: Computer Rooms	☐ Performance	S3 (section of the NRCC-PRF-01-E)	
	☐ Prescriptive	NRCC-PRC-01/ 04-E	
	☒ NA		
Covered Process: Laboratory Exhaust	☐ Performance	S4 (section of the NRCC-PRF-01-E)	
	☐ Prescriptive	NRCC-PRC-01/ 09-E	
	☒ NA		

Project Name:	Steak n Shake	NRCC-PRF-01-E	Page 4 of 20
Project Address:	1966 WEST AVE L LANCASTER	Calculation Date/Time:	00:51, Thu, Jun 27, 2019
Compliance Scope:	NewComplete	Input File Name:	Steak and Shake.cibd16x

G. COMPLIANCE PATH & CERTIFICATE OF COMPLIANCE SUMMARY

The following building components are only eligible for prescriptive compliance. Indicate which are relevant to the project.

Yes	NA	Prescriptive Requirement	Compliance Forms
☐	☒	Lighting (Indoor Unconditioned) §140.6	NRCC-LTI-01 / 02 / 03 / 04 / 05-E
☒	☐	Lighting (Outdoor) §140.7	NRCC-LTO-01 / 02 / 03-E
☐	☒	Lighting (Sign) §140.8	NRCC-LTS-01-E
☐	☒	Solar Thermal Water Heating: §140.5	NRCC-STH-01-E

The following building components may have mandatory requirements per Part 6. Indicate which are relevant to the project.

Yes	NA	Mandatory Requirement	Compliance Forms
		Commissioning: §120.8	
☐	☒	Simple Systems	NRCC-CXR-01 / 02 / 03 / 05-E
☐	☒	Complex Systems	NRCC-CXR-01 / 02 / 04 / 05-E
☐	☒	Electrical: §130.5	NRCC-ELC-01-E
☐	☒	Solar Ready: §110.10	NRCC-SRA-01 / 02-E
☐	☒	Covered Process: §120.6	NRCC-PRC-01-E
☐	☒	Parking Garage	NRCC-PRC-02-E
☐	☒	Commercial Refrigeration	NRCC-PRC-05-E
☐	☒	Warehouse Refrigeration	NRCC-PRC-06/07/08-E
☐	☒	Compressed Air	NRCC-PRC-10-E
☐	☒	Process Boilers	NRCC-PRC-11-E

Project Name:	Steak n Shake	NRCC-PRF-01-E	Page 5 of 20
Project Address:	1966 WEST AVE L LANCASTER	Calculation Date/Time:	00:51, Thu, Jun 27, 2019
Compliance Scope:	NewComplete	Input File Name:	Steak and Shake.cibd16x

H. CERTIFICATE OF INSTALLATION, CERTIFICATE OF ACCEPTANCE & CERTIFICATE OF VERIFICATION SUMMARY (NRCI/NRCA/NRCV) –
Documentation Author to indicate which Certificates must be submitted for the features to be recognized for compliance
(Retain copies and verify forms are completed and signed to post in field for Field Inspector to verify).
See Tables G. and H. in MCH and LTI Details Sections for Acceptance Tests and forms by equipment.

Building Component	Compliance Forms *(required for submittal)*	Confirmed Pass	Confirmed Fail
Envelope	☒ NRCI-ENV-01-E - For all buildings	☐	☐
	☒ NRCA-ENV-02-F- NFRC label verification for fenestration	☐	☐
Mechanical	☒ NRCI-MCH-01-E - For all buildings with Mechanical Systems	☐	☐
	☒ NRCA-MCH-02-A- Outdoor Air	☐	☐
	☒ NRCA-MCH-03-A – Constant Volume Single Zone HVAC	☐	☐
	☐ NRCA-MCH-04-H- Air Distribution Duct Leakage	☐	☐
	☒ NRCA-MCH-05-A- Air Economizer Controls	☐	☐
	☒ NRCA-MCH-06-A- Demand Control Ventilation	☐	☐
	☐ NRCA-MCH-07-A – Supply Fan Variable Flow Controls	☐	☐
	☐ NRCA-MCH-08-A- Valve Leakage Test	☐	☐
	☐ NRCA-MCH-09-A – Supply Water Temp Reset Controls	☐	☐
	☐ NRCA-MCH-10-A- Hydronic System Variable Flow Controls	☐	☐
	☐ NRCA-MCH-11-A – Auto Demand Shed Controls	☐	☐
	☒ NRCA-MCH-12-A- Packaged Direct Expansion Units	☐	☐
	☐ NRCA-MCH-13-A- Air Handling Units and Zone Terminal Units	☐	☐
	☐ NRCA-MCH-14-A- Distributed Energy Storage	☐	☐
	☐ NRCA-MCH-15-A – Thermal Energy Storage	☐	☐
	☐ NRCA-MCH-16-A- Supply Air Temp Reset Controls	☐	☐
	☐ NRCA-MCH-17-A – Condensate Water Temp Reset Controls	☐	☐
	☐ NRCA-MCH-18-A- Energy Management Controls Systems	☐	☐
	☐ NRCV-MCH-04-H- Duct Leakage Test	☐	☐

Project Name:	Steak n Shake	NRCC-PRF-01-E	Page 6 of 20
Project Address:	1966 WEST AVE L LANCASTER	Calculation Date/Time:	00:51, Thu, Jun 27, 2019
Compliance Scope:	NewComplete	Input File Name:	Steak and Shake.cibd16x

H. CERTIFICATE OF INSTALLATION, CERTIFICATE OF ACCEPTANCE & CERTIFICATE OF VERIFICATION SUMMARY (NRCI/NRCA/NRCV) –
Documentation Author to indicate which Certificates must be submitted for the features to be recognized for compliance
(Retain copies and verify forms are completed and signed to post in field for Field Inspector to verify).
See Tables G. and H. in MCH and LTI Details Sections for Acceptance Tests and forms by equipment.

Building Component	Compliance Forms *(required for submittal)*	Confirmed Pass	Confirmed Fail
Plumbing	☒ NRCI-PLB-01-E - For all buildings with Plumbing Systems	☐	☐
	☐ NRCI-PLB-02-E - required on central systems in high-rise residential, hotel/motel application.	☐	☐
	☐ NRCI-PLB-03-E - Single dwelling unit systems in high-rise residential, hotel/motel application.	☐	☐
	☐ NRCI-PLB-21-E - HERS verified central systems in high-rise residential, hotel/motel application.	☐	☐
	☐ NRCI-PLB-22-E - HERS verified single dwelling unit systems in high-rise residential, hotel/motel application.	☐	☐
	☐ NRCV-PLB-21-H- HERS verified central systems in high-rise residential, hotel/motel application.	☐	☐
	☐ NRCV-PLB-22-H - HERS verified single dwelling unit systems in high-rise residential, hotel/motel application.	☐	☐
	☐ NRCI-STH-01-E - Any solar water heating	☐	☐
Indoor Lighting	☒ NRCI-LTI-01-E - For all buildings	☐	☐
	☐ NRCI-LTI-02-E - Lighting control system, or for an Energy Management Control System (EMCS)	☐	☐
	☐ NRCI-LTI-03-E - Line-voltage track lighting integral current limiter, or for a supplementary overcurrent protection panel used to energize only line-voltage track lighting	☐	☐
	☐ NRCI-LTI-04-E - Two interlocked systems serving an auditorium, a convention center, a conference room, or a theater	☐	☐
	☐ NRCI-LTI-05-E - Lighting Control Credit Power Adjustment Factor (PAF)	☐	☐
	☐ NRCI-LTI-06-E - Additional wattage installed in a video conferencing studio	☐	☐
	☒ NRCA-LTI-02-A - Occupancy sensors and automatic time switch controls.	☐	☐
	☒ NRCA-LTI-03-A - Automatic daylighting controls	☐	☐
	☐ NRCA-LTI-04-A - Demand responsive lighting controls	☐	☐
Outdoor Lighting	☐ NRCI-LTO-01-E – Outdoor Lighting	☐	☐
	☐ NRCI-LTO-02-E- EMCS Lighting Control System	☐	☐
	☐ NRCA-LTO-02-A - Outdoor Lighting Control	☐	☐
Sign Lighting	☐ NRCI-LTS-01-E – Sign Lighting	☐	☐
Electrical	☐ NRCI-ELC-01-E - Electrical Power Distribution	☐	☐
Photovoltaic	☐ NRCI-SPV-01-E Photovoltaic Systems	☐	☐

Project Name:	Steak n Shake	NRCC-PRF-01-E	Page 7 of 20
Project Address:	1966 WEST AVE L LANCASTER	Calculation Date/Time:	00:51, Thu, Jun 27, 2019
Compliance Scope:	NewComplete	Input File Name:	Steak and Shake.cibd16x

H. CERTIFICATE OF INSTALLATION, CERTIFICATE OF ACCEPTANCE & CERTIFICATE OF VERIFICATION SUMMARY (NRCI/NRCA/NRCV) –
Documentation Author to indicate which Certificates must be submitted for the features to be recognized for compliance
(Retain copies and verify forms are completed and signed to post in field for Field Inspector to verify).
See Tables G. and H. in MCH and LTI Details Sections for Acceptance Tests and forms by equipment.

Building Component	Compliance Forms *(required for submittal)*	Confirmed Pass	Confirmed Fail
Covered Process	☐ NRCI-PRC-01-E Covered Processes	☐	☐
	☐ NRCA-PRC-01-F- Compressed Air Systems	☐	☐
	☐ NRCA-PRC-02-F- Kitchen Exhaust	☐	☐
	☐ NRCA-PRC-03-F- Garage Exhaust	☐	☐
	☐ NRCA-PRC-04-F- Refrigerated Warehouse- Evaporator Fan Motor Controls	☐	☐
	☐ NRCA-PRC-05-F- Refrigerated Warehouse- Evaporative Condenser Controls	☐	☐
	☐ NRCA-PRC-06-F- Refrigerated Warehouse- Air Cooled Condenser Controls	☐	☐
	☐ NRCA-PRC-07F- Refrigerated Warehouse- Variable Speed Compressor	☐	☐
	☐ NRCA-PRC-08-F- Electrical Resistance Underslab Heating System	☐	☐

I. ENVELOPE GENERAL INFORMATION (See NRCC-PRF-ENV-DETAILS for more information)

1.	Total Conditioned Floor Area	3,144 ft²	5.	Number of Floors Above Grade	1
2.	Total Unconditioned Floor Area	0 ft²	6.	Number of Floors Below Grade	0
3.	Addition Conditioned Floor Area	0 ft²			
4.	Addition Unconditioned Floor Area	0 ft²			

7. Opaque Surfaces & Orientation	8. Total Gross Surface Area	9. Total Fenestration Area	10. Window to Wall Ratio	Pass	Fail
North Wall	994 ft²	0 ft²	00.0%	☐	☐
East Wall	630 ft²	0 ft²	00.0%	☐	☐
South Wall	994 ft²	375 ft²	37.7%	☐	☐
West Wall	630 ft²	0 ft²	00.0%	☐	☐
Total	**3,248 ft²**	**375 ft²**	11.5%	☐	☐
Roof	3,144 ft²	0 ft²	00.0%	☐	☐

Project Name:	Steak n Shake	NRCC-PRF-01-E	Page 8 of 20
Project Address:	1966 WEST AVE L LANCASTER	Calculation Date/Time:	00:51, Thu, Jun 27, 2019
Compliance Scope:	NewComplete	Input File Name:	Steak and Shake.cibd16x

J. FENESTRATION ASSEMBLY SUMMARY § 110.6

1. Fenestration Assembly Name / Tag or I.D.	2. Fenestration Type / Product Type / Frame Type	3. Certification Method¹	4. Assembly Method	5. Area ft²	6. Overall U-factor	7. Overall SHGC	8. Overall VT	9. Status²	Pass	Fail
Double Metal Tinted	VerticalFenestration FixedWindow N/A	NFRC Rated	SiteBuilt	375	0.40	0.40	0.42	N	☐	☐

¹ Newly installed fenestration shall have a certified NFRC Label Certificate or use the CEC default tables found in Table 110.6-A and Table 110.6-B. Center of Glass (COG) values are for the glass-only, determined by the manufacturer, and are shown for ease of verification. Site-built fenestration values are calculated per Nonresidential Appendix NA6 and are used in the analysis.
² Status: N - New, A – Altered, E – Existing

Taking compliance credit for fenestration shading devices? (If "Yes", see NRCC-PRF-ENV-DETAILS for more information)	No

K. OPAQUE SURFACE ASSEMBLY SUMMARY § 120.7/ § 140.3

1. Surface Name	2. Surface Type	3. Area (ft²)	4. Framing Type	5. Cavity R-Value	6. Continuous R-Value	7. U-Factor / F-Factor / C-Factor	8. Status¹	Pass	Fail
Roof10	Roof	3144	NA	0	30	U-Factor: 0.030	N	☐	☐
R-19 Wall12	ExteriorWall	3248	Wood	19	NA	U-Factor: 0.072	N	☐	☐
Slab On Grade17	UndergroundFloor	3144	NA	0	NA	F-Factor: 0.730	N	☐	☐

¹ Status: N - New, A – Altered, E – Existing

L. ROOFING PRODUCT SUMMARY § 140.3

1. Product Type	2. Product Density (lb/ft²)	3. Aged Solar Reflectance	4. Thermal Emittance	5. SRI	6. Cool Roof Credit	7. Roofing Product Description	Pass	Fail
Roof10	6.463	0.08	0.75	NA	No	NA	☐	☐

Project Name:	Steak n Shake	NRCC-PRF-01-E	Page 9 of 20
Project Address:	1966 WEST AVE L LANCASTER	Calculation Date/Time:	00:51, Thu, Jun 27, 2019
Compliance Scope:	NewComplete	Input File Name:	Steak and Shake.cibd16x

M. HVAC SYSTEM SUMMARY (see NRCC-PRF-MCH-DETAILS for more information) § 110.1 / § 110.2

Dry System Equipment ¹ (Fan & Economizer info included below in Table N)

1. Equip Name	2. Equip Type	3. System Type (Simple ² or Complex ³)	4. Qty	5. Total Heating Output (kBtu/h)	6. Supp Heat Source (Y/N)	7. Supp Heat Output (kBtuh)	8. Total Cooling Output (kBtu/h)	9. Efficiency Cooling	9. Efficiency Heating	10. Acceptance Testing Required? (Y/N) ⁴	11. Status⁵	Pass	Fail
Mech System 1	SZAC (Packaged3Phase)	Simple	1	90	No	0	87	EER-11.0	AFUE-82.0	Yes	N	☐	☐
Mech System 2	SZAC (Packaged3Phase)	Simple	1	74	No	0	57	SEER-14.00 / EER-12.20	AFUE-80.0	Yes	N	☐	☐

¹ Dry System Equipment includes furnaces, air handling units, heat pumps, etc.
² Simple Systems must complete NRCC-CXR-03-E commissioning design review form
³ Complex Systems must complete NRCC-CXR-04-E commissioning design review form
⁴ A summary of which acceptance tests are applicable is provided in NRCC-PRF-MCH-DETAILS
⁵ Status: N - New, A – Altered, E – Existing

Wet System Equipment ¹ / Pumps

12. Equip Name	13. Equip Type	14. Qty	15. Vol (gal)	16. Rated Capacity (kBtu/h)	17. Efficiency	18. Standby Loss	19. Tank Ext. R Value	20. Qty	21. GPM	22. HP	23. VSD (Y/N)	24. Status²	Pass	Fail
80 Gall2	Storage	1	80.00	80	Thrml. Eff.: 0.78	SBLF: 0.010	NA		NA		No	N	☐	☐

¹ Wet System Equipment includes boilers, chillers, cooling towers, water heaters, etc.
² Status: N - New, A – Altered, E – Existing

Discrepancy between modeled and designed equipment sizing? (If "Yes", see Table F. "Additional Remarks" for an explanation)	No

Project Name:	Steak n Shake	NRCC-PRF-01-E	Page 10 of 20
Project Address:	1966 WEST AVE L LANCASTER	Calculation Date/Time:	00:51, Thu, Jun 27, 2019
Compliance Scope:	NewComplete	Input File Name:	Steak and Shake.cibd16x

N. ECONOMIZER & FAN SYSTEMS SUMMARY¹ § 140.4

1. Equip Name	2. Outside Air CFM	3. Supply Fan CFM	HP	BHP	TSP (Inch WC)	Control	4. Return Fan CFM	HP	BHP	TSP (Inch WC)	Control	5. Economizer Type (if present)	Pass	Fail
Mech System 1	400	3000	1.660	1.660	2.11	ConstantVolume	NA	NA	NA	NA	NA	DifferentialDryBulb	☐	☐
Mech System 2	229	1916	0.750	0.750	1.24	ConstantVolume	NA	NA	NA	NA	NA	DifferentialEnthalpy	☐	☐

¹ Mechanical ventilation calculations and exhaust fans are included in the NRCC-PRF-MCH-DETAILS section

O. EQUIPMENT CONTROLS § 120.2

1. Equip Name	2. Equip Type	3. Controls	Pass	Fail
Mech System 1	SZAC	1 Zones With CO2Sensor Vent. Control Differential Drybulb Economizer No Supply Air Temp. Control No Optimum Start No Evaporative Cooler No Heat Recovery	☐	☐
Mech System 2	SZAC	1 Zones With CO2Sensor Vent. Control Differential Enthalpy Economizer No Supply Air Temp. Control No Optimum Start No Evaporative Cooler No Heat Recovery	☐	☐
Plant - DHW1 - SHW	Service Hot Water, Primary Only	Fixed Temperature Control, No DDC No Heat Recovery	☐	☐

Project Name:	Steak n Shake	NRCC-PRF-01-E	Page 11 of 20
Project Address:	1966 WEST AVE L LANCASTER	Calculation Date/Time:	00:51, Thu, Jun 27, 2019
Compliance Scope:	NewComplete	Input File Name:	Steak and Shake.cibd16x

P. SYSTEM DISTRIBUTION SUMMARY § 120.4/ § 140.4(l)

Dry System Distribution

1. Equip Name	2. Equip Type	3. Duct Leakage and Sealing Required per 140.4(l)	4. Duct Leakage will be verified per NA1 and NA2	5. Ducts Insulation R-Value	5. Ducts Location	6. Status¹	Pass	Fail
Mech System 1	SZAC	No	No	8.0	Conditioned	N	☐	☐
Mech System 2	SZAC	No	No	8.0	Conditioned	N	☐	☐

¹ Status: N - New, E – Existing

Does the Project Include Zonal Systems? (If "Yes", see NRCC-PRF-MCH-DETAILS for system information)	No
Does the Project Include a Solar Hot Water System? (If "Yes", see NRCC-PRF-MCH-DETAILS for system information)	No
Multifamily or Hotel/ Motel Occupancy? (If "Yes", see NRCC-PRF-MCH-DETAILS for DHW system information)	No

Q. INDOOR CONDITIONED LIGHTING GENERAL INFO (see NRCC-PRF-LTI-DETAILS for more info)³ § 140.6

1. Occupancy Type ¹	2. Conditioned Floor Area ² (ft²)	3. Installed Lighting Power (Watts)	4. Lighting Control Credits (Watts)	5. Additional (Custom) Allowance: Area Category Footnotes (Watts)	5. Additional (Custom) Allowance: Tailored Method (Watts)	Pass	Fail
Retail Merchandise Sales, Wholesale Showroom	3,144	3,774	0	0	0	☐	☐
Building Totals:	**3,144**	**3,774**	**0**	**0**	**0**		

¹ See Table 140.6-C
² See NRCC-LTI-01-E for unconditioned spaces
³ Lighting information for existing spaces modeled is not included in the table

Project Name:	Steak n Shake	NRCC-PRF-01-E	Page 12 of 20
Project Address:	1966 WEST AVE L LANCASTER	Calculation Date/Time:	00:51, Thu, Jun 27, 2019
Compliance Scope:	NewComplete	Input File Name:	Steak and Shake.cibd16x

R. INDOOR CONDITIONED LIGHTING SCHEDULE (Adapted from NRCC-LTI-01-E)¹ § 130.0

Luminaire Schedule (includes all permanent installed lighting in conditioned space, and portable lighting over 0.3 w/ft² in offices) — Installed Watts (Conditioned)

Name or Item Tag	Complete Luminaire Description (i.e., 3-lamp fluorescent troffer, F32T8, one dimmable electronic ballast)	Watts per luminaire	How Wattage is Determined: CEC Default from NA8	How Wattage is Determined: According to §130.0(c)	Total Number Luminaires	Installed Watts	Pass	Fail
F1	57w LED	57	Yes	No	24	1,368	☐	☐
F2	43w LED	43	Yes	No	8	344	☐	☐
F3	55w LED	55	Yes	No	5	275	☐	☐
F4	18w	18	Yes	No	23	414	☐	☐

¹ If lighting power densities were used in the compliance model Building Departments will need to check prescriptive forms for Luminaire Schedule details.

S1. COVERED PROCESS SUMMARY – ENCLOSED PARKING GARAGES § 140.9

This Section Does Not Apply

S2. COVERED PROCESS SUMMARY – COMMERCIAL KITCHENS § 140.9

This Section Does Not Apply

S3. COVERED PROCESS SUMMARY – COMPUTER ROOMS § 140.9

This Section Does Not Apply

S4. COVERED PROCESS SUMMARY – LABORATORY EXHAUSTS § 140.9

This Section Does Not Apply

T. UNMET LOAD HOURS

This Section Does Not Apply

Project Name:	Steak n Shake	NRCC-PRF-01-E	Page 13 of 20
Project Address:	1966 WEST AVE L LANCASTER	Calculation Date/Time:	00:51, Thu, Jun 27, 2019
Compliance Scope:	NewComplete	Input File Name:	Steak and Shake.cibd16x

U. ENERGY USE SUMMARY

Energy Component	Standard Design Site (MWh)	Proposed Design Site (MWh)	Margin (MWh)	Standard Design Site (MBtu)	Proposed Design Site (MBtu)	Margin (MBtu)
Space Heating	--	--	--	7.3	6.8	0.5
Space Cooling	8.5	8.3	0.2	--	--	--
Indoor Fans	13.2	11.0	2.2	--	--	--
Heat Rejection	--	--	--	--	--	--
Pumps & Misc.	--	--	--	--	--	--
Domestic Hot Water	--	--	--	19.8	14.3	5.5
Indoor Lighting	13.1	13.1	0.0	--	--	--
COMPLIANCE TOTAL	**34.8**	**32.4**	**2.4**	**27.1**	**21.1**	**6.0**
Receptacle	11.4	11.4	0.0	--	--	--
Process	9.2	9.2	0.0	--	--	--
Other Ltg	--	--	--	--	--	--
Process Motors	--	--	--	--	--	--
TOTAL	**55.4**	**53.0**	**2.4**	**27.1**	**21.1**	**6.0**

Project Name:	Steak n Shake	NRCC-PRF-01-E	Page 14 of 20
Project Address:	1966 WEST AVE L LANCASTER	Calculation Date/Time:	00:51, Thu, Jun 27, 2019
Compliance Scope:	NewComplete	Input File Name:	Steak and Shake.cibd16x

DOCUMENTATION AUTHOR'S DECLARATION STATEMENT § 10-103

I certify that this Certificate of Compliance documentation is accurate and complete.

Documentation Author Name: PMEE Consulting LLC	Signature:
Company:	
Address: 5329 Office Center ct	Signature Date:
City/State/Zip: Bakersfield Ca 93309	CEA Identification (If applicable):
Phone: 6612048582	

RESPONSIBLE PERSON'S DECLARATION STATEMENT

I certify the following under penalty of perjury, under the laws of the State of California:

1. I hereby affirm that I am eligible under the provisions of Division 3 of the Business and Professions Code to sign this document as the person responsible for its preparation; and that I am licensed in the State of California as a civil engineer, mechanical engineer, electrical engineer, or I am a licensed architect.
2. I affirm that I am eligible under the provisions of Division 3 of the Business and Professions Code by section 5537.2 or 6737.3 to sign this document as the person responsible for its preparation; and that I am a licensed contractor performing this work.
3. I affirm that I am eligible under Division 3 of the Business and Professions Code to sign this document because it pertains to a structure or type of work described as exempt pursuant to Business and Professions Code Sections 5537, 5538 and 6737.1.

Responsible Envelope Designer Name: Paul Dhanens	**Signature:**	
Company: Paul Dhanens Architect		
Address: 5100 California ave, suite 107	Date Signed:	
City/State/Zip: Bakersfield Ca 93309	Declaration Statement Type:	
Phone: 661-326-8936	Title:	License #:
Responsible Lighting Designer Name: Paul Dhanens	**Signature:**	
Company: Paul Dhanens Architect		
Address: 5100 California ave, suite 107	Date Signed:	
City/State/Zip: Bakersfield Ca 93309	Declaration Statement Type:	
Phone: 661-326-8936	Title:	License #:
Responsible Mechanical Designer Name: Paul Dhanens	**Signature:**	
Company: Paul Dhanens Architect		
Address: 5100 California ave, suite 107	Date Signed:	
City/State/Zip: Bakersfield Ca 93309	Declaration Statement Type:	
Phone: 661-326-8936	Title:	License #:

Project Name:	Steak n Shake	NRCC-PRF-01-E	Page 15 of 20
Project Address:	1966 WEST AVE L LANCASTER	Calculation Date/Time:	00:51, Thu, Jun 27, 2019
Compliance Scope:	NewComplete	Input File Name:	Steak and Shake.cibd16x

NRCC-PRF-ENV-DETAILS -SECTION START-

A. OPAQUE SURFACE ASSEMBLY DETAILS

1. Surface Name	2. Surface Type	3. Description of Assembly Layers	4. Notes	Pass	Fail
Roof10	Roof	Asphalt shingles - 1/4 in. Vapor permeable felt - 1/8 in. Extruded Polystyrene - XPS - 6 in. R30.00 Plywood - 1/2 in. Air - Cavity - Wall Roof Ceiling - 4 in. or more Gypsum Board - 1/2 in.		☐	☐
R-19 Wall12	ExteriorWall	Stucco - 7/8 in. Vapor permeable felt - 1/8 in. Wood framed wall, 16in. OC, 5.5in., R-19 Gypsum Board - 1/2 in.		☐	☐
Slab On Grade17	UndergroundFloor	Slab Type = UnheatedSlabOnGrade Insulation Orientation = None Insulation R-Value = R0		☐	☐

B. OVERHANG DETAILS (Adapted from NRCC-ENV-02-E)

This Section Does Not Apply

C. OPAQUE DOOR SUMMARY

This Section Does Not Apply

Project Name:	Steak n Shake	NRCC-PRF-01-E	Page 16 of 20
Project Address:	1966 WEST AVE L LANCASTER	Calculation Date/Time:	00:51, Thu, Jun 27, 2019
Compliance Scope:	NewComplete	Input File Name:	Steak and Shake.cibd16x

NRCC-PRF-MCH-DETAILS -SECTION START-

A. MECHANICAL VENTILATION AND REHEAT *(Adapted from 2016-NRCC-MCH-03-E)*

1. DESIGN AIR FLOWS / 2. VENTILATION (§ 120.1)

CONDITIONED ZONE NAME	HEATING/COOLING SYSTEM ID	DESIGN PRIMARY AIR FLOW (CFM)	DESIGN PRIMARY MINIMUM AIR FLOW (CFM)	MINIMUM PRIMARY AIR FLOW FRACTION	MAXIMUM HEATING AIR FLOW (CFM)	MAXIMUM HEATING AIR FLOW FRACTION	DDC CONTROL (Y/N)	VENT SYSTEM ID	CONDITIONED AREA (ft2)	MIN. VENT PER AREA (CFM/ft2)	DESIGN NUM. OF PEOPLE	MIN. VENT PER PERSON (CFM/person)	REQ'D VENT AIR FLOW (CFM)	DESIGN VENT AIR FLOW (CFM)	TRANSFER AIRFLOW (CFM)	DCV (Y/N)	Operable Window Interlock § 140.4(n) (Y/N)	Pass	Fail
1-Zone 1	Mech System 1	3,000	NA	0.00	NA	NA	N	Mech System 1	2,000	0.20	16.67	24.00	400	400	NA	Y	NA	☐	☐
2-Zone 2	Mech System 2	1,916	NA	0.00	NA	NA	N	Mech System 2	1,144	0.20	9.54	24.00	229	229	NA	Y	NA	☐	☐
								TOTAL	3,144		26.21		629	629	NA			☐	☐

B. ZONAL SYSTEM AND TERMINAL UNIT SUMMARY § 140.4

1. System ID	2. System Type	3. Qty	4. Rated Capacity (kBtuh) Heating	4. Rated Capacity (kBtuh) Cooling	5. Economizer	6. Zone Name	7. Airflow (cfm) Design	7. Min.	7. Min. Ratio	8. Fan BHP	8. Cycles	8. ECM Motor	Pass	Fail
1-Zone 1-Trm	Uncontrolled	1	NA	NA	NA	1-Zone 1	3000	NA	0.00	NA	NA	☐	☐	☐
2-Zone 2-Trm	Uncontrolled	1	NA	NA	NA	2-Zone 2	1916	NA	0.00	NA	NA	☐	☐	☐

C. EXHAUST FAN SUMMARY

This Section Does Not Apply

Project Name:	Steak n Shake	NRCC-PRF-01-E	Page 17 of 20
Project Address:	1966 WEST AVE L LANCASTER	Calculation Date/Time:	00:51, Thu, Jun 27, 2019
Compliance Scope:	NewComplete	Input File Name:	Steak and Shake.cibd16x

D. DHW EQUIPMENT SUMMARY – *(Adapted from NRCC-PLB-01)* § 110.3

1. DHW Name	2. Heater Element Type	3. Tank Type	4. Qty	5. Tank Vol (gal)	6. Rated Input (kBtu/h)	7. Efficiency	8. Tank Insulation R-value (Int/Ext)	9. Standby Loss Fraction	10. Heat Pump Type	11. Tank Location or Ambient Condition	Pass	Fail
80 Gall2	Gas	Storage	1	80.00	80	Thrml. Eff.: 0.78	NA	SBLF: 0.010	NA	NA	☐	☐

E. MULTI-FAMILY CENTRAL DHW SYSTEM DETAILS

This Section Does Not Apply

F. SOLAR HOT WATER HEATING SUMMARY (Adapted from NRCC-STH-01)

This Section Does Not Apply

G. MECHANICAL HVAC ACCEPTANCE TESTS & FORMS *(Adapted from 2016-NRCC-MCH-01-E)* § RA4

Declaration of Required Acceptance Certificates (NRCA) – Acceptance Certificates that may be submitted. (Retain copies and verify forms are completed and signed to post in field for Field Inspector to verify).

Test Description		MCH-02A	MCH-03A	MCH-04A	MCH-05A	MCH-06A	MCH-07A	MCH-08A	MCH-09A	MCH-10A	MCH-11A	MCH-12A	MCH-13A	MCH-14A	MCH-15A	MCH-16A	MCH-17A	MCH-18A	Confirmed Pass	Confirmed Fail
Equipment Requiring Testing or Verification	# of units	Outdoor Air	Single Zone Unitary	Air Dist. Ducts	Economizer Controls	DCV	Supply Fan VAV	Valve leakage	Supply Water Temp. Reset	Hyd. Variable Flow Control	Auto Demand Shed Control	FDD for DX Units	Auto FDD for Air & Zone	Dist. Energy Storage DX AC	TES Systems	Supply Air Temp. Reset	Condenser Water Reset Controls	ECMS		
Plant - DHW1 - SHW	1	--	--	--	--	--	--	--	--	--	--	--	--	--	--	--	--	--	☐	☐
Mech System 1	1	X	X	--	X	X	--	--	--	--	--	X	--	--	--	--	--	--	☐	☐

Project Name:	Steak n Shake	NRCC-PRF-01-E	Page 18 of 20
Project Address:	1966 WEST AVE L LANCASTER	Calculation Date/Time:	00:51, Thu, Jun 27, 2019
Compliance Scope:	NewComplete	Input File Name:	Steak and Shake.cibd16x

G. MECHANICAL HVAC ACCEPTANCE TESTS & FORMS *(Adapted from 2016-NRCC-MCH-01-E)* § RA4

Declaration of Required Acceptance Certificates (NRCA) – Acceptance Certificates that may be submitted. (Retain copies and verify forms are completed and signed to post in field for Field Inspector to verify).

Test Description		MCH-02A	MCH-03A	MCH-04A	MCH-05A	MCH-06A	MCH-07A	MCH-08A	MCH-09A	MCH-10A	MCH-11A	MCH-12A	MCH-13A	MCH-14A	MCH-15A	MCH-16A	MCH-17A	MCH-18A	Confirmed Pass	Confirmed Fail
Equipment Requiring Testing or Verification	# of units	Outdoor Air	Single Zone Unitary	Air Dist. Ducts	Economizer Controls	DCV	Supply Fan VAV	Valve leakage	Supply Water Temp. Reset	Hyd. Variable Flow Control	Auto Demand Shed Control	FDD for DX Units	Auto FDD for Air & Zone	Dist. Energy Storage DX AC	TES Systems	Supply Air Temp. Reset	Condenser Water Reset Controls	ECMS		
Mech System 2	1	X	X	--	X	X	--	--	--	--	--	X	--	--	--	--	--	--	☐	☐

H. EVAPORATIVE COOLER SUMMARY

This Section Does Not Apply

NRCC-PRF-LTI-DETAILS -SECTION START-

A. INDOOR CONDITIONED LIGHTING CONTROL CREDITS (Adapted from NRCC-LTI-02-E) § 140.6

This Section Does Not Apply

B. INDOOR CONDITIONED LIGHTING MANDATORY LIGHTING CONTROLS (Adapted from NRCC-LTI-02-E) § 130.1

This Section Does Not Apply

§130.1(a) = Manual area controls; §130.0(b) = Multi Level; §130.1(c) = Auto Shut-Off; §130.1(d) = Mandatory Daylight; §130.1(e) = Demand Responsive

C. TAILORED METHOD CONDITIONED LIGHTING POWER ALLOWANCE SUMMARY AND CHECKLIST (Adapted from NRCC-LTI-04-E) § 140.6

General lighting power (see Table D)	0
General lighting power from special function areas (see Table E)	NA
Additional "use it or lose it" (See Table G)	0

Project Name:	Steak n Shake	NRCC-PRF-01-E	Page 19 of 20
Project Address:	1966 WEST AVE L LANCASTER	Calculation Date/Time:	00:51, Thu, Jun 27, 2019
Compliance Scope:	NewComplete	Input File Name:	Steak and Shake.cibd16x

C. TAILORED METHOD CONDITIONED LIGHTING POWER ALLOWANCE SUMMARY AND CHECKLIST (Adapted from NRCC-LTI-04-E) § 140.6

Total watts 0

D. GENERAL LIGHTING POWER (Adapted from NRCC-LTI-04-E) § 140.6-D

This Section Does Not Apply

E. GENERAL LIGHTING FROM SPECIAL FUNCTION AREAS (Adapted from NRCC-LTI-04-E) § 140.6(c) 3H

Room Number	Primary Function Area	Illuminance Value (LUX)	Room Cavity Ratio (Table G)	Allowed LPD	Floor Area (ft²)	Allowed Watts	Pass	Fail
NA	NA	NA	NA	NA	NA	NA	☐	☐

Note: Tailored Method for Special Function Areas is not currently implemented

F. ROOM CAVITY RATIO (Adapted from NRCC-LTI-04-E)

Rectangular Spaces

Room Number	Task/Activity Description	Room Length (ft)	Room Width (ft)	Room Cavity Height (ft)	RCR	Pass	Fail
NA	NA	NA	NA	NA	NA	☐	☐

Non-Rectangular Spaces

This Section Does Not Apply

Note: All applicable spaces are listed under the Non-Rectangular Spaces table

G. ADDITIONAL "USE IT OR LOSE IT" (Adapted from NRCC-LTI-04-E)

1. Wall Display	2. Combined Floor Display and Task Lighting	3. Combined Ornamental and Special Effects Lighting	4. Very Valuable Merchandise	Allowed Watts	Pass	Fail
0	0	0	0	0	☐	☐

5. Wall Display

This Section Does Not Apply

Project Name:	Steak n Shake	NRCC-PRF-01-E	Page 20 of 20
Project Address:	1966 WEST AVE L LANCASTER	Calculation Date/Time:	00:51, Thu, Jun 27, 2019
Compliance Scope:	NewComplete	Input File Name:	Steak and Shake.cibd16x

6. Floor Display and Task Lighting

This Section Does Not Apply

7. Combined Ornamental and Special Effects Lighting

This Section Does Not Apply

8. Very Valuable Merchandise

This Section Does Not Apply

H. INDOOR & OUTDOOR LIGHTING ACCEPTANCE TESTS & FORMS (Adapted from NRCC-LTI-01-E and NRCC-LTO-01-E) § 130.4

Declaration of Required Acceptance Certificates (NRCA) –Acceptance Certificates that must be verified in the field. (Retain copies and verify forms are completed and signed to post in field for Field Inspector to verify).

Test Description		Indoor NRCA-LTI-02-A	Indoor NRCA-LTI-03-A	Indoor NRCA-LTI-04-A	Outdoor NRCA-LTO-02-A	Confirmed Pass	Confirmed Fail
Equipment Requiring Testing or Verification	# of units	Occ Sensors / Auto Time Switch	Auto Daylight	Demand Responsive	Outdoor Controls		
Occupant Sensors	0	☒	☐	☐	☐	☐	☐
Automatic Time Switch	0	☒	☐	☐	☐	☐	☐
Automatic Daylighting	0	☐	☒	☐	☐	☐	☐
Demand Responsive	0	☐	☐	☐	☐	☐	☐
Outdoor Controls	0	☐	☐	☐	☐	☐	☐

PAUL DHANENS ● ARCHITECT

ARCHITECT

LICENSED ARCHITECT
PAUL DHANENS
NO. C-23843
RENEWAL
STATE OF CALIFORNIA

5100 CALIFORNIA AVE, SUITE 107
BAKERSFIELD, CALIFORNIA 93309
TELEPHONE: (661) 326-8936
FACSIMILE: (661) 326-8937

CONSULTANT

COPYRIGHT

PAUL DHANENS ARCHITECT expressly reserves its copyright and other property rights in these documents which are not to be reproduced, changed or copied in any written, graphic or electronic form, nor assigned to any third party without the expressed written consent of PAUL DHANENS ARCHITECT.

NOTICE TO CONTRACTORS
Written dimensions on these drawings shall take precedence over scaled dimensions. Contractor shall verify and be responsible for confirming all dimensions and shall notify the architect immediately of any descrepencies or field variations discovered.

PROJECT

TENANT IMPROVEMENT FOR

FAMOUS FOR Steak 'n Shake STEAKBURGERS

1966 WEST AVE L
LANCASTER, CA

DATE	ISSUED FOR
9-24-18	BUILDING DEPT SUBMITTAL
6-26-19	

NO.	REVISIONS
1	
2	
3	
4	

ENERGY

FILE NAME: 2366A2-0

SHEET

T-24.1

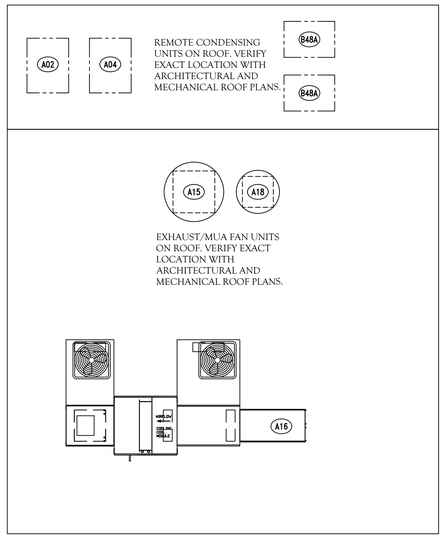

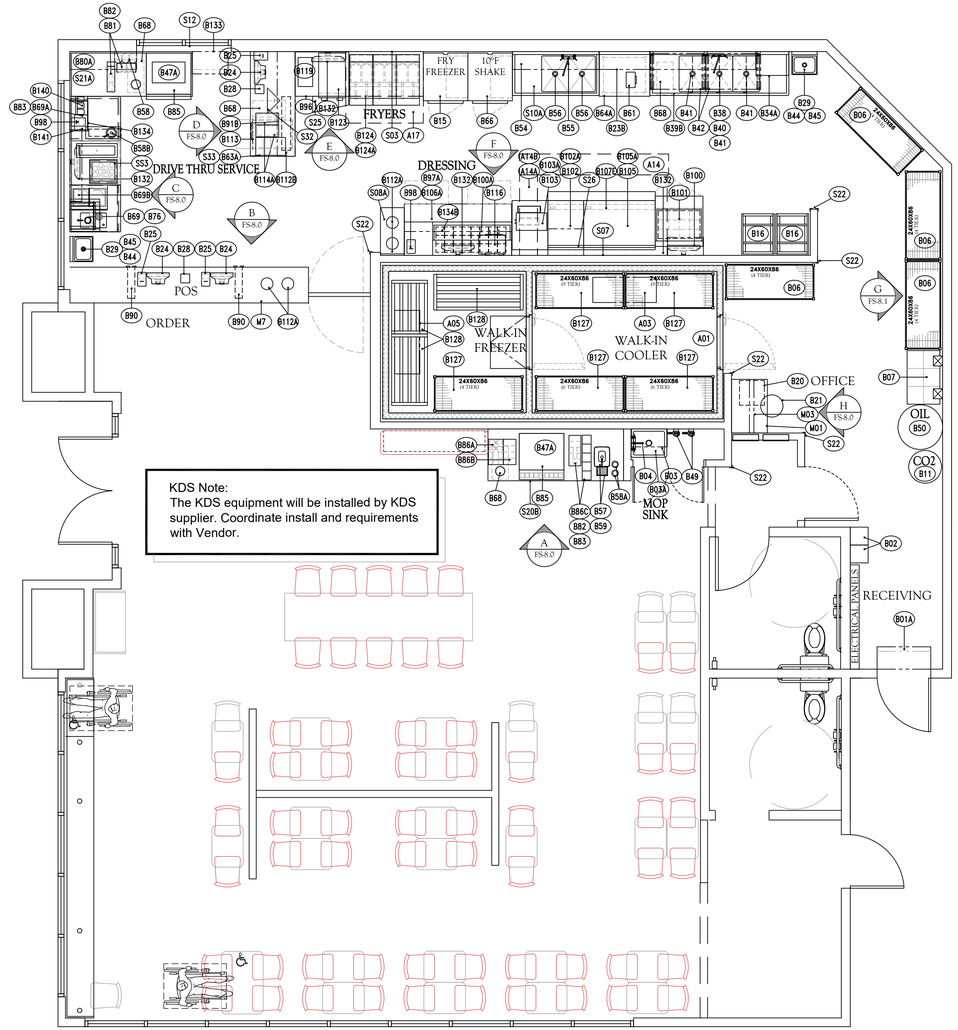

EQUIPMENT FLOOR PLAN

SCALE: 1/4" = 1'-0"

1 CROSSCHECK 6/11/19 SA

FOODSERVICE CONSULTANT:

LANDMARK KITCHEN DESIGN, LLC

ARIZONA • NEW ENGLAND
TEL: (602) 443-5264
info@landmarkfsc.com
www.landmarkfsc.com

TENANT IMPROVEMENT FOR

FAMOUS FOR Steak 'n Shake STEAKBURGERS

1966 WEST AVE L
LANCASTER, CA

9-24-18	BUILDING DEPT SUBMITTAL
1	
2	
3	
4	

EQUIPMENT FLOOR PLAN

FS-1.0

FOODSERVICE EQUIPMENT SCHEDULE

ITEM	QTY	BUY OUT	FABRICATED	MILLWORK	N.I.K.E.C.	PROVIDED BY	INSTLLED BY	DESCRIPTION	MANUFACTURE	MODEL NO.	REMARKS
A01	1	X				KEC	KEC	WALK-IN COOLER / FREEZER	THERMALRITE/NORLAKE	CUSTOM	w/ LED LIGHT FIXTURES
A02	1	X				KEC	KEC	COOLER CONDENSING UNIT	THERMALRITE/NORLAKE	CUSTOM	
A03	1	X				KEC	KEC	COOLER EVAP COIL	THERMALRITE/NORLAKE	CUSTOM	
A04	1	X				KEC	KEC	FREEZER CONDENSING UNIT	THERMALRITE/NORLAKE	CUSTOM	
A05	1	X				KEC	KEC	FREEZER EVAP COIL	THERMALRITE/NORLAKE	CUSTOM	
A14	1				X	O	GC	GRIDDLE LINE EXHAUST HOOD	CAPTIVE AIRE	5430ND-2-PSP-F	
A14A	1				X	O	GC	FIRE SUPPRESSION SYSTEM	CAPTIVE AIRE	R-102	
A14B	1				X	O	GC	ELECTRICAL CONTROL PACKAGE	CAPTIVE AIRE	DCV-2111	
A15	1				X	O	GC	GRIDDLE LINE EXHAUST FAN	CAPTIVE AIRE	DU180HFA	
A16	1				X	O	GC	MAKE-UP AIR UNIT	CAPTIVE AIRE	A1-150-MPU	
A17	1				X	O	GC	FRY EXHAUST HOOD	CAPTIVE AIRE	3044BD-2-PSP-F	
A18	1				X	O	GC	FRY EXHAUST FAN	CAPTIVE AIRE	DU50HFA	
B01A	1	X				KEC	GC	AIR CURTAIN	MARS	NH236-1UA-PW	
B02	2	X				KEC	GC	LOCKERS	WIN-HOLT	WL-66	
B03	1	X				KEC	KEC	MOP SINK	AERO MANUFACTURING	3MP-2116-6	
B03A	1	X				KEC	KEC	MOPS INK SHELF w/ MOP HANGER	AERO MANUFACTURING	SNS-B03A	
B04	1	X				KEC	KEC	FAUCET	T&S	B-0655-BSTP	
B06	4	X				KEC	KEC	WIRE SHELVING UNITS	FOCUS FOODSERVICE	GREEN EPOXY	SEE FS-1.0 FOR SIZE & CONFIGURATION
B07	1				X	V	V	SODA SYSTEM	BY VENDOR		
B11	1				X	V	V	BULK C02 TANK	BY VENDOR		
B15	1	X				KEC	KEC	REACH-IN FREEZER (HINGED RIGHT)	TRAULSEN	G12000	
B16	2				X	O	O	BREAD RACKS	BY OTHERS		
B20	1				X	V	GC	SAFE	BLUE DOT	SM282016DD	
B21	1	X				KEC	KEC	OFFICE CHAIR	G & A COMMERCIAL SEATING	891	
B23B	2	X				KEC	KEC	WALL SHELF	AERO MANUFACTURING	3W-1236	WALL BACKING BY G.C. REQ'D
B24	3				X	O	O	P.O.S. SYSTEM	BY OWNER		
B25	3				X	O	O	P.O.S. PRINTER	BY OWNER		
B28	2	X				KEC	KEC	DROP BOX	PERMA VAULT	PRO-10	
B29	2	X				KEC	KEC	HAND SINK	AERO MANUFACTURING	HSF2S	
B34A	1	X				KEC	KEC	SORTING RACK	AERO MANUFACTURING	3SW-2122	WALL BACKING BY G.C. REQUIRED
B38	1	X				KEC	KEC	3 COMP. SINK	AERO MANUFACTURING	3F3-2418-18RL	w/ FAUCETS AND LEVERWASTES
B39B	1	X				KEC	KEC	OVERSHELF	AERO MANUFACTURING	3W-1272	WALL BACKING BY G.C. REQ'D
B40	1	X				KEC	KEC	FAUCET	T & S BRASS	B-0230	
B41	3	X				KEC	KEC	LEVER WASTE	T & S BRASS	B-3940	
B42	2	X				KEC	KEC	WIRE WALL SHELVING	FOCUS FOODSERVICE	GREEN EPOXY	WALL BACKING BY G.C. REQ'D
B44	2				X	O	GC	TOWEL DISPENSER	BY OTHERS		
B45	2				X	O	GC	SOAP DISPENSER	BY OTHERS		
B47A	2	X				KEC	KEC	ICE CUBER	MANITOWOC	IBT-1020C	
B48A	2	X				KEC	KEC	REMOTE CONDENSING UNIT	MANITOWOC	CVDT-1200	
B49	2	X				KEC	KEC	WATER FILTER SYSTEM	3M PURIFICATION	ICE190-S	
B50	1				X	V	V	OIL STORAGE TANK	MAHONEY		
B54	2	X				KEC	KEC	WALL SHELF	AERO MANUFACTURING	3W-1254	WALL BACKING BY G.C. REQ'D
B55	1	X				KEC	KEC	FAUCET	T & S BRASS	B-0230	w/ B-0230-K
B56	2	X				KEC	KEC	LEVERWASTE	T & S BRASS	B-3940	
B57	1				X	O	O	CONDIMENT DISPENSER	SERVER PRODUCTS	85783	SMALL WARES ITEM
B58	1	X				KEC	KEC	CUP DISPENSERS	DISPENSE RITE	(2)ADJ-NW-81/(1)ADJ-NW-31	w/ EZ-3EZ STAND
B58A	2	X				KEC	KEC	DISPOSABLE CUP DISPENSER	SAN JAMAR	C2010C	
B58B	1	X				KEC	KEC	CUP DISPENSER	DISPENSE RITE	LID-4BT	
B59	1	X				KEC	KEC	DRIP TRAY TROUGH	SERVER PRODUCTS	7291	
B61	1	X				KEC	KEC	SLICER	SLICE CHIEF	947	
B63A	1	X				KEC	KEC	WORK TABLE 30X72	AERO MANUFACTURING	SNS-63A	PATTIAL UNDERSHELVES
B64A	1	X				KEC	KEC	WORK TABLE 30X34	AERO MANUFACTURING	3TSB-3034	
B66	1	X				KEC	KEC	REACH-IN FREEZER	TRAULSEN	G12000	SET TO +10 DEG SHAKE CONDITIONING
B68	4	X				KEC	KEC	TRASH CAN	RUBBERMAID	FG354000BRN	
B69	1	X				KEC	KEC	MILK SHELF w/ NOTCH	AERO MANUFACTURING	SNS-MM-B69	WALL BACKING BY G.C. REQ'D
B69A	1	X				KEC	KEC	PRINTER SHELF	AERO MANUFACTURING	SNS-MM-69A	
B69B	1	X				KEC	KEC	SHAKE STATION SHELF	AERO MANUFACTURING	3W-848	WALL BACKING BY G.C. REQ'D
B76	1	X				KEC	KEC	MILK DISPENSER	SILVER KING	SKMAJ1/C4	
B80A	1	X				KEC	KEC	WALL SHELF	AERO MANUFACTURING	3W-1230	WALL BACKING BY G.C. REQ'D
B81	1	X				KEC	KEC	CONDIMENT CADDY	DISPENSE RITE	NLO-1B	
B82	2	X				KEC	KEC	LID DISPENSER	SAN JAMAR	L1014	
B83	2	X				KEC	KEC	STRAW HOLDER	SAN JAMAR	L1035	
B85	2				X	V	V	SODA DISPENSER	BY VENDOR		
B86A	1	X				KEC	KEC	CONDIMENT CADDY	DISPENSE-RITE	NLO-SWNH	
B86B	1	X				KEC	KEC	CONDIMENT CADDY	DISPENSE-RITE	NLO-LDNH	
B86C	1	X				KEC	KEC	CONDIMENT CADDY	DISPENSE-RITE	SWCH-1BT	
B90	6	X				KEC	KEC	CUP DISPENSER	SAN JAMAR	C5450C18	
B91B	1	X				KEC	KEC	DOUBLE OVERSHELF	AERO MANUFACTURING	3DO-1272	
B96	1	X				KEC	KEC	WORK TABLE	AERO MANUFACTURING	3TSS-3036	
B97A	2	X				KEC	KEC	SQUEEZE BOTTLE	SERVER PRODUCTS	86988	
B98	2				X	O	O	P.O.S. REMOTE PRINTER	BY OWNER		
B100	1	X				KEC	KEC	OVERSHELF	AERO MANUFACTURING	3W-1224	WALL BACKING BY G.C. REQ'D
B100A	1	X				KEC	KEC	OVERSHELF	AERO MANUFACTURING	3DO-1672	w/ PAPER HOLDERS
B101	1	X				KEC	KEC	STAB BOXES	TRAULSEN	UPT3212	
B102	1	X				KEC	KEC	GRIDDLE	VULCAN	924RX-XX	w/ REAR TROUGH
B102A	1	X				KEC	KEC	GAS CONNECTOR	DORMONT	1675KIT48	
B103	1	X				KEC	KEC	VERTICAL TOASTER	ROUNDUP	VCT?2000	
B103A	1		X			KEC	KEC	TOASTER CART	ALL SOUTHERN STAINLESS	CUSTOM	
B105	1	X				KEC	KEC	GRIDDLE	VULCAN	948RX-XX	w/ REAR TROUGH
B105A	1	X				KEC	KEC	GAS CONNECTOR	DORMONT	1675KIT48	
B106A	1	X				KEC	KEC	DRESSING TABLE	TRAULSEN	UPT7224-DD	
B107E	1		X			KEC	KEC	6' GRILL STAND	ALL SOUTHERN STAINLESS	CUSTOM	COUNTER SERV CONFIG
B112A	4	X				KEC	KEC	PENDANT HEAT LAMPS	HATCO	DLH-500SN	GLOSSY GRAY FINISH
B112B	1	X				KEC	KEC	HEAT LAMP	MARSHALL AIR SYSTEMS	500794	
B113	1	X				KEC	KEC	DRAWER WARMER	HATCO	HDW-2N	
B114A	2	X				KEC	KEC	COUNTER TOP WARMER	SERVER	86090	
B116	1	X				KEC	KEC	PRODUCT HOLDING UNIT	DUKE MANUFACTURING	FWM3-22-22437	
B119	1	X				KEC	KEC	HOT FOOD DISPENSER	STAR MANUFACTURING	SPDE1HP	WALL MOUNT
B123	1	X				KEC	KEC	SMALL DUMP STATION	MARSHALL AIR SYSTEMS	RR5C	
B124	1	X				KEC	KEC	FRYER BATTERY	PITCO	SSHLV14C-3/FDATO	
B124A	1	X				KEC	KEC	GAS CONNECTOR	DORMONT	16100KIT48	
B127	5	X				KEC	KEC	WALK-IN SHELVING UNITS	FOCUS FOODSERVICE	GREEN EPOXY	SEE FS-1.0 FOR SIZE & CONFIGURATION
B128	3	X				KEC	KEC	DUNNAGE RACK	FOCUS FOODSERVICE	FADR482412/FADR602412/FADR362412	
B132	4				X	O	V	KDS MONITORS	BY OWNER		
B133	1	X				KEC	KEC	AIR CURTAIN	BERNER	DTU1018AA	w/ DOOR MICROSWITCH & MOUNTING BRACKET
B134	1	X				KEC	KEC	18" TICKET RAILS	SAN JAMAR	CK6518A	
B134B	1	X				KEC	KEC	60" TICKET RAIL	SAN JAMAR	CK6560A	
B140	1	X				KEC	KEC	TRIPLE SHAKE MIXER	HAMILTON BEACH	HMD400	
B141	1	X				KEC	KEC	MIX 'N CHILL	HAMILTON BEACH	94950	
S03	LOT		X			O	GC	S/S FLASHING (FRYERS)	CAPTIVE AIRE	CUSTOM	
S07	LOT		X			O	GC	S/S WALL FLASHING (GRILL LINE)	CAPTIVE AIRE	CUSTOM	
S08A	1		X			KEC	KEC	S/S TABLE 18X32	AERO MANUFACTURING	SNS-S08A	
S10A	1		X			KEC	KEC	TWO COMP. SINK	AERO MANUFACTURING	3F2-2418-18L	
S12	LOT				X	GC	GC	WINDOW SILL CAPS	BY G.C.		
S20B	1			X	X	GC	GC	BEVERAGE COUNTER	MILLWORK	BY G.C.	
S21A	1		X			KEC	KEC	BEVERAGE COUNTER (DRIVE THRU)	AERO MANUFACTURING	SNS-21A	
S22	6		X			KEC	KEC	CORNER GUARDS	AERO MANUFACTURING	SNS-S22	
S25	1		X			KEC	KEC	FRY CUP HOLDER	ALL SOUTHERN STAINLESS	CUSTOM	
S26	1		X			KEC	KEC	WALL SHELF w/ LOWER SHELF	ALL SOUTHERN STAINLESS	CUSTOM	WALL BACKING BY G.C. REQ'D
S32	1		X			KEC	KEC	PAPER HOLDER	ALL SOUTHERN STAINLESS	CUSTOM	
S33	1		X			KEC	KEC	BAG HOLDER	ALL SOUTHERN STAINLESS	CUSTOM	
SS3	1		X			KEC	KEC	SHAKE STATION LITE	ALL SOUTHERN STAINLESS	CUSTOM	
M01	1			X	X	O	V	OFFICE DESK	BY MILLWORK VENDOR		
M03	1			X	X	O	V	OFFICE SHELVING	BY MILLWORK VENDOR		
M7	1			X	X	O	V	NON-TRAD FRONT SERVICE COUNTER	BY MILLWORK VENDOR		

NOTES:

1. ALL CONNECTIONS SHOWN IN THE SCHEDULE ARE SIZED AS THEY ACTUALLY OCCUR ON THE EQUIPMENT.
2. CONNECTIONS SHOWN ARE FOR ONE UNIT. TO DETERMINE TOTAL REQUIREMENTS, MULTIPLY BY NUMBER IN QUANTITY COLUMN.
3. WHEN EQUIPMENT IS NOTED AS EXISTING, UTILITY REQUIREMENTS SHOULD MATCH EXISTING AS INDICATED ON THE MANUFACTURER'S DATA PLATE.
4. WHERE INDICATED TO CONNECT IN OR THROUGH A VALVE COMPARTMENT, CONTRACTOR SHALL STUB-UP INTO VALVE COMPARTMENT AT HEIGHT INDICATED ON ROUGH-IN PLAN, CAP HIS WORK AND MAKE FINAL CONNECTIONS AFTER EQUIPMENT IS IN PLACE.
5. THE INTENT OF THE DRAWINGS AND SPECIFICATIONS REGARDING ELECTRICAL PRE-WIRING AND PLUMBING PRE-PIPING IS TO HAVE THE K.E.C. EXTEND TO AND TERMINATE ALL CONNECTIONS FOR THE EQUIPMENT IN THE LOCATIONS INDICATED IN THE EQUIPMENT SCHEDULE AND SPOT PLANS.
6. ALL ITEMS SHOWN WITH P.I. CONNECTIONS PLUG INTO RECEPTACLES FURNISHED BY THE K.E.C. AS PART OF THE EQUIPMENT.
7. ELECTRICAL, PLUMBING AND MECHANICAL CONTRACTORS TO PROVIDE ALL ROUGH-IN BUILDING SERVICES AND FINAL CONNECTION TO ALL FOOD SERVICE EQUIPMENT.

CONTRACT CODE:

E – EXISTING
GC – GENERAL CONTRACTOR FURNISHED
P – PURCHASE
F – FABRICATE
O – OWNER FURNISHED
V – VENDOR FURNISHED
OT – BY OTHERS

NOTE:

1. ALL S/S CUSTOM FABRICATION TO BE MANUFACTURED TO NSF STANDARDS BY APPROVED FABRICATOR.
2. CUSTOM REFRIGERATION TO BE FABRICATED TO NSF STANDARDS BY CERTIFIED NSF FABRICATOR.

FOODSERVICE CONSULTANT:
LANDMARK
KITCHEN DESIGN, LLC
ARIZONA • NEW ENGLAND
TEL: (602) 443-0344
info@landmarkphx.com
www.landmarkphx.com

TENANT IMPROVEMENT FOR

1966 WEST AVE L
LANCASTER, CA

9-24-18	BUILDING DEPT SUBMITTAL
1	
2	
3	
4	

EQUIPMENT SCHEDULE

FS-2.0

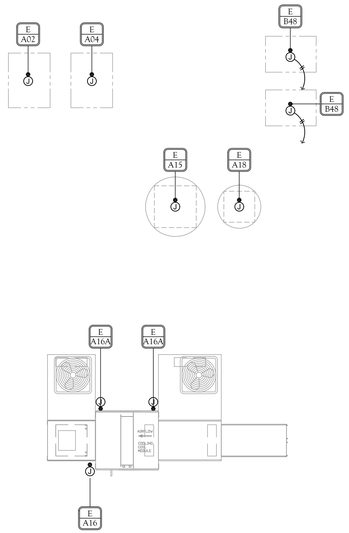

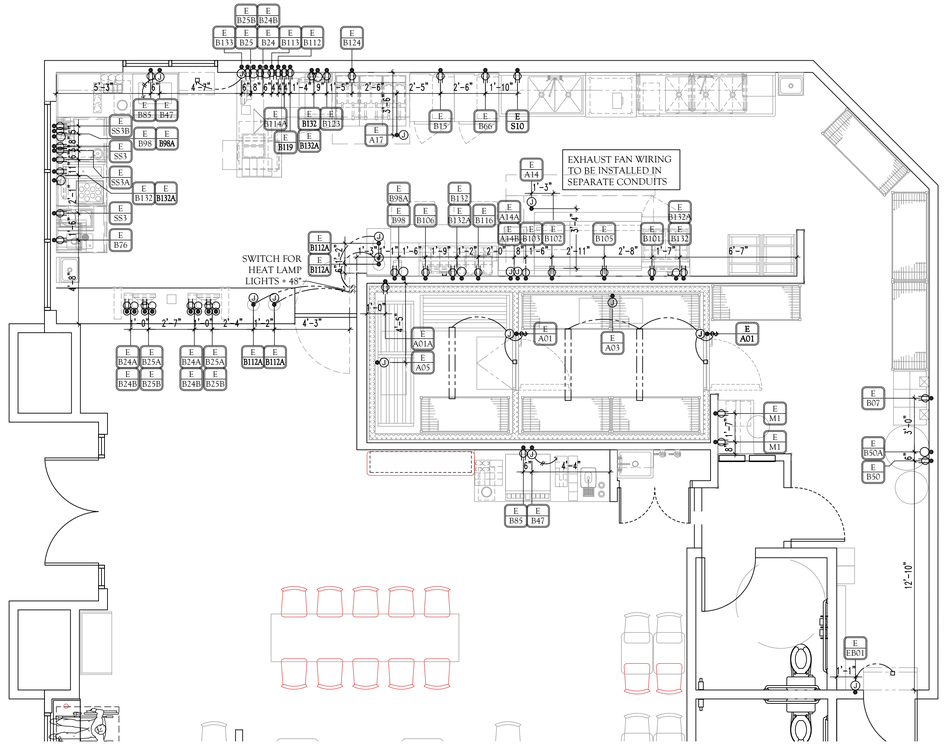

FLOOR PLAN

SCALE: 1/4" = 1'-0"

ELECTRICAL NOTES

A	ALL ELECTRICAL OUTLETS SHOWN ON THIS PLAN ARE FOR FIXTURES FURNISHED BY THE KITCHEN EQUIPMENT CONTRACTOR OR VENDOR. FOR FURTHER BLDG ELECTRICAL REQUIREMENTS (TELEPHONES, CLOCKS, SIGNS, EXHAUST HOOD SWITCHING, ETC.) SEE OTHER PLANS.
B	ALL DIMENSIONS GIVEN ARE FROM CENTERLINES AND/OR FINISHED WALLS. ELEVATIONS GIVEN ARE FROM FINISHED FLOOR TO CENTERLINE OF OUTLET. ALL ROUGH-INS SHOWN ARE TO BE RUN INSIDE WALLS (EXCEPT STUB-UPS). LOCATION INDICATES POINT OF EXIT FROM WALLS, CEILINGS OR FLOORS. ALL CONVENIENCE OUTLETS ARE TO BE SET HORIZONTALLY. ALL 120 VOLT OUTLETS NOT DESIGNATED WITH SPECIFIC LOADS TO BE RATED AT 20.0 AMPS.
C	ELECTRICIAN TO CONNECT ALL ELECTRICAL EQUIPMENT AND FIXTURES AND DO ANY INTERNAL WIRING REQUIRED IN THE FIXTURES AS REQUIRED BY THE SPECIFICATIONS. ALL ELECTRICAL OUTLET COVER PLATES ARE TO BE STAINLESS STEEL AND ARE TO BE FURNISHED BY THE ELECTRICIAN, AS WELL AS THE RECEPTACLE, UNLESS OTHERWISE SPECIFIED IN THE ITEM SPECIFICATIONS. KITCHEN EQUIPMENT CONTRACTOR TO FURNISH A GALVANIZED JUNCTION BOX IN THE FIXTURE CUTOUT TO RECEIVE THE RECEPTACLE, UNLESS OTHERWISE NOTED. ALL DISCONNECT SWITCHES REQUIRED ARE TO BE FURNISHED AND INSTALLED BY THE ELECTRICIAN AT TIME OF INSTALLATION.
D	ALL WORK TO BE PERFORMED IN FULL ACCORDANCE WITH ALL APPLICABLE CODES RELATING TO HOOK-UP, INSTALLATION & WIRING OF EQUIPMENT. OMISSIONS OR ERRORS ON THE SCHEDULE DO NOT RELIEVE THE ELECTRICIAN FROM COMPLETE FINAL CONNECTION RESPONSIBILITY.
E	REQUIREMENTS SHOWN ARE FOR FOOD SERVICE EQUIPMENT ONLY. SEE ARCHITECTURAL DRAWINGS FOR ADDITIONAL REQUIREMENTS.
F	CONTROL CIRCUIT FROM ELECTRICIAN FURNISHED AND INSTALL SHUNT TRIP BREAKER(S) TO FIRE CONTROL SYSTEM CONTROL MICRO-SWITCH. SHUNT TRIP BREAKER(S) TO BE UNDER EXHAUST HOOD. IN CASE OF FIRE, ALL POWER TO EQUIPMENT UNDER HOOD WILL BE SHUT OFF. ALL GAS EQUIPMENT LOCATED UNDER HOOD WILL ALSO BE SHUT OFF IN CASE OF FIRE. MUST BE WIRED THAT IN THE EVENT OF POWER FAILURE, FIRE CONTROL SYSTEM WILL NOT BE ACTIVATED AND WHEN POWER IS RESTORED, FIRE SYSTEM WILL NOT DISCHARGE.
G	ELECTRICIAN TO MAKE MINIMUM PENETRATIONS IN VAULT CEILING TO ACCESS LIGHT FIXTURE CONNECTIONS INSIDE WALK-IN VAULTS. CONDUIT TO BE ROUTED ABOVE THE WALK-IN VAULT CEILING.
H	E.C. TO PROVIDE ANY INTERCONNECTIONS BETWEEN KITCHEN FIRE SUPPRESSION SYSTEM AND MAIN BUILDING FIRE SYSTEM AS REQUIRED.
J	ALL HORIZONTAL WIRING ON WALK-IN COOLERS AND FREEZERS TO BE DONE ON EXTERIOR OF WALK-INS. WIRING BY E.C.
K	ALL KITCHEN OUTLETS ARE TO BE GFI RECEPTACLES.

CLARIFICATIONS

1. ROUGH-IN ELECTRICAL PERFORMED BY THE ELECTRICAL CONTRACTOR SHALL INCLUDE ALL MATERIAL, WIRE, SWITCHES, JUNCTION BOXES, CONVENIENCE OUTLETS, DISCONNECTS, HEAT TAPE, STARTERS, CONTACTORS, SHUNT BREAKERS, MICROSWITCHES, RECEPTACLES AND PULL BOXES NOT BUILT INTO THE FOOD SERVICE EQUIPMENT.
2. FINAL CONNECTIONS USUALLY PERFORMED BY THE ELECTRICAL CONTRACTOR SHALL INCLUDE ALL MATERIALS, MOUNTING ALL SWITCHES OR CONTROL PANELS, COOLER/FREEZER LIGHTS AND INTERCONNECTING WIRING BETWEEN SWITCHES, PANELS, LIGHTS, SOLENOID VALVES, COMPRESSORS, CONDENSERS, EVAPORATORS, DOOR HEATERS, HEATED VENTS, DEFROST HEATERS, HEAT TAPE AND DISCONNECTS AS REQUIRED.
3. SEE HOOD DRAWINGS FOR ELECTRICAL SPECIFICATIONS REQUIRED FOR EXHAUST HOODS, FAN PACKAGE AND FIRE SUPPRESSION SYSTEM.
4. ALL ELECTRICAL RECEPTACLES IN FOOD SERVICE AREA TO BE MOUNTED HORIZONTALLY.

ELECTRICAL LEGEND

SYMBOLS		ABBREVIATIONS	
(J)	JUNCTION BOX (J-BOX)	A	AMPERES
●	ELECTRICAL ROUGH-IN	V	VOLTS
◉	STUB-UP	W	WATTS
◉	DROP CORD	PH	PHASE
□	EQUIPMENT CONNECTION	AFF	ABOVE FINISHED FLOOR
F	FLUORESCENT LIGHT FIXTURE	DN	DOWN FROM ABOVE
◇	INCANDESCENT LIGHT INDICATION	BTC	BRANCH TO CONNECTION POINT AND CONNECT EQUIPMENT
▭	BREAKER PANELBOARD	HP	HORSE POWER
$	SWITCH AS NOTED	KW	KILOWATTS
◉	FLOOR BOX (FL. BOX)	DC	DIRECT CONNECTION
▷	TELEPHONE OUTLET	K.E.C.	KITCHEN EQUIPMENT CONTRACTOR
⊜	FOURPLEX CONVENIENCE OUTLET (FCO)	E.C.	ELECTRICAL CONTRACTOR
⊖	DUPLEX CONVENIENCE OUTLET (DCO)		
⊖	SINGLE CONVENIENCE OUTLET (SCO)		

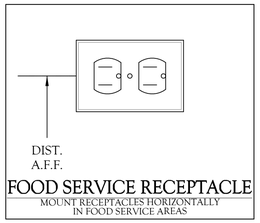

FOOD SERVICE RECEPTACLE

MOUNT RECEPTACLES HORIZONTALLY IN FOOD SERVICE AREAS

ELECTRICAL ROUGH-IN SCHEDULE

TAG	QUA	ROUGH-IN	LOAD	SERVICE TO	REMARKS
EA01	2	120V 1PH JB DN + 108"	5.0A	WALK-IN COOLER/FREEZER	
EA01A	1	120V 1PH DR + 114"	20.0A	WALK-IN COOLER/FREEZER	FOR HEAT TAPE WIRE
EA02	1	208V 3PH JB (ON ROOF)	4.2A	COOLER CONDENSING UNIT	
EA03	1	120V 1PH JB DN + 108"	1.8A	COOLER EVAP COIL	
EA04	1	208V 3PH JB (ON ROOF)	8.3A	FREEZER CONDENSING UNIT	
EA05	1	208V 1PH JB DN + 108"	8.7A	FREEZER EVAP COIL	
EA14	1	120V 1PH JB DN + 108"	5.0A	GRIDDLE LINE EXHAUST HOOD	FOR HOOD LIGHTS ONLY
EA14A	1	120V 1PH JB + 96"	15.0A	FIRE SUPPRESSION SYSTEM	
EA14B	1	120/208V 3PH JB + 96"	*	ELECRICAL CONTROL PACKAGE	
EA15	1	208V 3PH JB (ON ROOF)	3.8A	GRIDDLE LINE EXHAUST FAN	VERIFY EXACT LOCATION
EA16	1	208V 3PH JB (ON ROOF)	6.1A	MUA FAN	VERIFY EXACT LOCATION
EA16A	2	208V 3PH JB (ON ROOF)	11.2A	MUA CONDENSING UNITS	
EA17	1	120V 1PH JB DN + 108"	5.0A	FRY LINE EXHAUST HOOD	FOR HOOD LIGHTS ONLY
EA18	1	208V 3PH JB (ON ROOF)	2.0A	FRY EXHAUST FAN	VERIFY EXACT LOCATION
EB01	1	120V 1PH JB + 86"	9.0A	AIR CURTAIN	CONN THRU DOOR MICROSWITCH
EB07	1	120V 1PH DR + 86"	20.0A	SODA SYSTEM	
EB15	1	120V 1PH DR + 86"	9.7A	REACH-IN FREEZER	
EB24	1	120V 1PH DR + 56"	7.5A	P.O.S. SYSTEM	DC/IG
EB24A	2	120V 1PH DR STUB-UP + 8"	7.5A	P.O.S. SYSTEM	DC/IG
EB24B	3	EMPTY BOX & CONDUIT FOR P.O.S. COMM CABLE BY E.C.			
EB25	1	120V 1PH DR + 56"	3.0A	P.O.S. PRINTER	DC/IG
EB25A	2	120V 1PH DR STUB-UP + 8"	3.0A	P.O.S. PRINTER	DC/IG
EB25B	3	EMPTY BOX & CONDUIT FOR P.O.S. COMM CABLE BY E.C.			
EB47	2	120V 1PH JB + 64"	1.1A	ICE MACHINE	
EB48	2	208V 3PH JB (ON ROOF)	9.3A	REMOTE CONDENSING UNITS	INTERCONNECT w/ EB47 CONTROL WIRING
EB50	1	120V 1PH DR + 48"	20.0A	USED OIL TANK	
EB50A	1	EMPTY BOX & CONDUIT FOR COMM CABLE BY E.C.			
EB66	1	120V 1PH DR + 86"	9.7A	REACH-IN FREEZER	
EB76	1	120V 1PH DR + 68"	1.5A	MILK DISPENSER	
EB85	2	120V 1PH DR + 56"	3.5A	SODA DISPENSER	
EB98	2	120V 1PH DR + 66"	7.5A	P.O.S. SYSTEM	DC/IG
EB98A	2	EMPTY BOX & CONDUIT FOR P.O.S. COMM CABLE BY E.C.			
EB101	1	120V 1PH DR + 18"	7.5A	STAB BOXES	
EB102	1	120V 1PH DR + 18"	1.0A	GRIDDLE	
EB103	1	208V 1PH SR + 45"	15.8A	VERTICAL TOASTER	
EB105	2	120V 1PH DR + 18"	1.0A	GRIDDLE	
EB106	1	120V 1PH DR + 18"	7.5A	DRESSING TABLE	
EB112A	5	120V 1PH JB (AT CEILING)	3.2A	PENDANT HEAT LAMP	
EB112	1	120/208V 1PH JB + 68"	10.0A	HEAT LAMP	
EB113	1	120V 1PH DR + 12"	7.5A	DRAWER WARMER	
B114A	1	120V 1PH DR + 56"	(2)4.2A	COUNTER TOP WARMER	
EB116	1	120V 1PH DR + 66"	10.0A	PRODUCT HOLDING UNIT	
EB119	1	120V 1PH DR + 72"	7.0A	HOT FOOD DISPENSER	
EB121	1	120V 1PH DR STUB-UP + 8"	6.0A	U/C REFRIGERATOR	
EB123	1	120V 1PH DR + 48"	9.0A	SMALL DUMP STATION	
EB124	1	120V 1PH DR + 12"	5.1A	FRYER BATTERY CONTROLS	
EB131	1	120V 1PH DR + 16"	15.0A	CRANE GAMES	
EB132	4	120V 1PH DR + 75"	7.5A	KDS SYSTEM	DC/IG
EB132A	4	EMPTY BOX & CONDUIT FOR P.O.S. COMM CABLE BY E.C.			
EB133	1	120V 1PH JB + 86"	1.6A	AIR CURTAIN	CONN THRU DOOR MICROSWITCH
ES10	1	120V 1PH DR + 56"	15.0A	PREP TABLE	CONVENIENCE OUTLET
ESS3	2	120V 1PH DR + 12"	9.3A	DRIVE THRU STAKE STATION	
ESS3A	2	120V 1PH DR + 54"	8.5A	SHAKE STATION ACCESSORY	
ESS3B	1	120V 1PH DR + 54"	1.5A	SHAKE STATION ACCESSORY	

FOODSERVICE CONSULTANT:
LANDMARK KITCHEN DESIGN, LLC
ARIZONA • NEW ENGLAND
(480) 969-1000 PHONE
info@landmarkkitchen.com
www.landmarkgfe.com

TENANT IMPROVEMENT FOR

FAMOUS FOR Steak 'n Shake STEAKBURGERS

1966 WEST AVE L
LANCASTER, CA

4-24-18	BUILDING DEPT SUBMITTAL
1	
2	
3	
4	

EQUIPMENT ELECTRICAL ROUGH-INS

FS-3.0

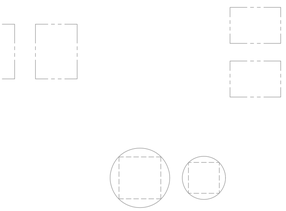

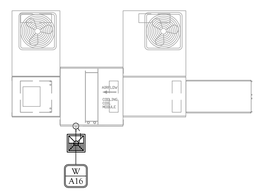

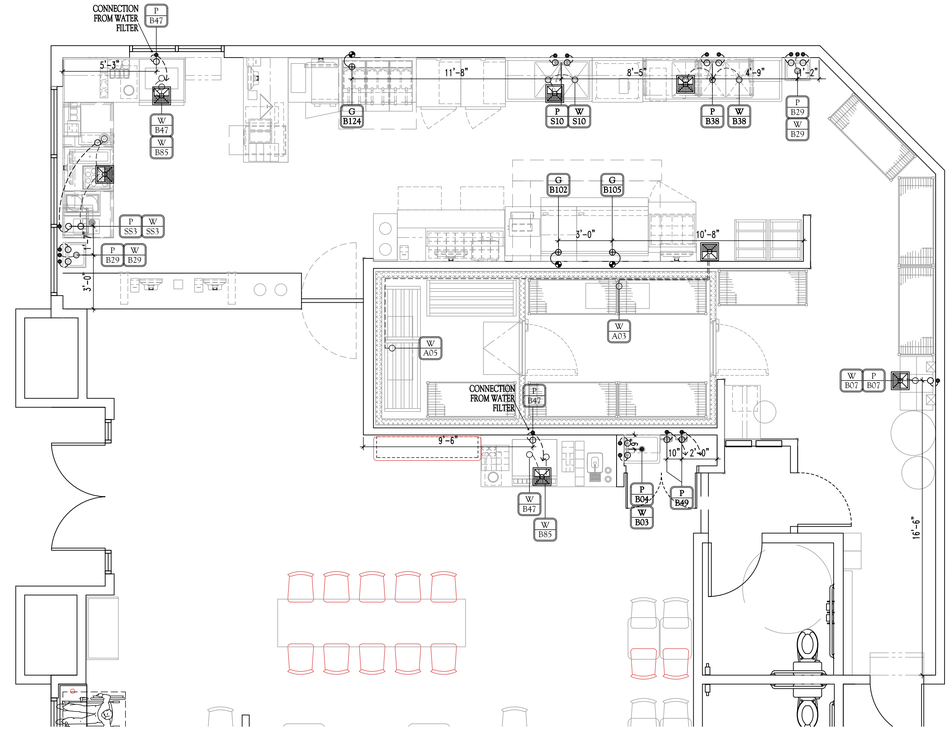

FLOOR PLAN

SCALE: 1/4" = 1'-0"

PLUMBING ROUGH-IN SCHEDULE

TAG	QUA	ROUGH-IN	CONNECTION	SERVICE TO	REMARKS
PB04	1	1/2" HW & CW + 36"	1/2" HW & CW	SERVICE FAUCET	
PB07	1	1/2" CW + 24"	1/2" CW	SODA SYSTEM	w/ BACKFLOW DEVICE BY P.C.
PB29	1	1/2" HW & CW + 18"	1/2" HW & CW	HAND SINK	
PB38	1	1/2" HW & CW + 18"	1/2" HW & CW	3 COMPT. SINK	
PB47	2	1/2" CW + 72"	1/2" CW	ICE MACHINES	CONNECT THRU FILTER
PB49	2	1/2" CW + 72"	1/2" CW	FILTER SYSTEM	
PS10	1	1/2" HW & CW + 18"	1/2" HW & CW	PREP SINKS	
PSS3	1	3/4" HW & CW + 12"	3/4" HW	DRIVE THRU STAKE STATION	PC TO PROVICE 100° F WATER w/ MIX VALVE

WASTE ROUGH-IN SCHEDULE

TAG	QUA	ROUGH-IN	CONNECTION	SERVICE TO	REMARKS
WA03	1	FLOOR SINK	1" I.W.	COOLER EVAP COIL	
WA05	1	FLOOR SINK	1" I.W.	FREEZER EVAP COIL	
WA16	1	FLOOR SINK	1" I.W.	MUA UNIT	
WB03	1	2" W (IN FLOOR)	2" W	MOP SINK	
WB07	1	FLOOR SINK	1/2" I.W.	SODA SYSTEM	FOR BACKFLOW DEVICE BY P.C.
WB29	1	1-1/2" W + 16"	1-1/2" W	HAND SINK	
WB38	1	FLOOR SINK	(3) 2" I.W.	3 COMPT. SINK	
WB47	3	FLOOR SINK	3/4" I.W.	ICE MACHINES	
WB85	2	FLOOR SINK	1" I.W.	SODA DISPENSER	
WS10	1	FLOOR SINK	(2) 2" W	PREP SINKS	
WSS3	1	FLOOR SINK	(2) 1-1/2" I.W.	DRIVE THRU STAKE STATION	

GAS ROUGH-IN SCHEDULE

TAG	QUA	CONNECTION	BTUH	SERVICE TO	REMARKS
GB102	1	3/4" G + 10"	54 MBTU	GRIDDLE	w/ Q.D. HOSE & RESTRAINING DEVICE
GB105	1	3/4" G + 10"	104 MBTU	GRIDDLE	w/ Q.D. HOSE & RESTRAINING DEVICE
GB124	1	1-1/4" G + 10"	217 MBTU	FRYER BATTERY	w/ Q.D. HOSE & RESTRAINING DEVICE

REFER TO SPECIAL CONDITIONS PLAN SHEET FOR FLOOR SINK, FLOOR TROUGH & SLAB PENETRATION DIMENSIONS

NOTE: ALL GAS EQUIPMENT ON LEGS OR CASTERS SHALL HAVE RESTRAINT CABLES & QUICK DISCONNECT HOSES

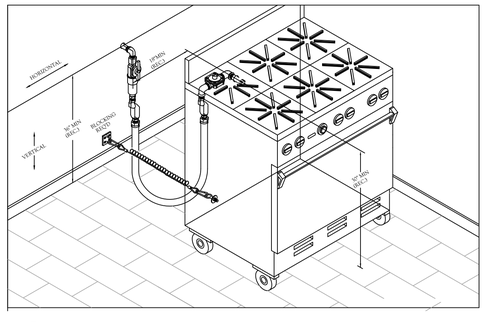

1 / FS-4.0 DISCONNECT GAS HOSE DETAIL

NOT TO SCALE

CLARIFICATIONS

A	MECHANICAL GAS VALVE FURNISHED WITH FIRE SUPPRESSION AND IS TO BE INSTALLED BY THE PLUMBING CONTRACTOR
B	PLUMBER TO SPECIFY AND LOCATE EQUIPMENT AND UTILITIES FOR MOP SINKS. (SINKS FURNISHED BY PLUMBER).
C	ROUGH-IN PLUMBING PERFORMED BY THE PLUMBING CONTRACTOR SHALL INCLUDE ALL MATERIAL, PIPES, VALVES, FITTINGS, UNDERGROUND TRAPS, FLOOR SINKS, FLOOR DRAINS, VENTS, FLOOR DRAIN AND FLOOR SINK COVERS AND STOPS AT THE ENDS OF WATER AND STEAM LINES.
D	FINAL CONNECTIONS USUALLY PERFORMED BY THE PLUMBING CONTRACTOR SHALL INCLUDE ALL MATERIALS, PIPING, VALVES, FITTINGS, TRAPS, EXTENDED WASTES AND WHATEVER IS NECESSARY TO PROPERLY CONNECT THE EQUIPMENT ITEM TO THE ROUGH-IN OUTLET. THIS INCLUDES STOPS ON ALL WATER LINES, CLEANOUTS ON ALL DIRECT CONNECTED DRAIN LINES AND HARD COPPER DRAINS TO FLOOR SINKS FROM EQUIPMENT.
E	ALL WORK TO BE PERFORMED IN FULL ACCORDANCE WITH THE APPLICABLE CODES RELATING TO INSTALLATION AND HOOK-UP OF EQUIPMENT. OMISSIONS OR ERRORS ON THE SCHEDULE DO NOT RELIEVE THE PLUMBING CONTRACTOR FROM COMPLETE FINAL PLUMBING RESPONSIBILITY.
F	ALL CONNECTIONS SHOWN RELATE TO KITCHEN EQUIPMENT ONLY. REFER TO ARCHITECTURAL/ENGINEERING PLANS FOR ADDITIONAL REQUIREMENTS.
G	ALL DIMENSIONS GIVEN ARE FROM COLUMN CENTERLINES AND/OR FINISHED WALLS AND ARE IN INCHES TO 4'-0". ELEVATIONS GIVEN ARE FROM FINISHED FLOORS. ALL ROUGH-INS SHOWN ARE TO BE RUN INSIDE WALLS (EXCEPT STUB-UPS) LOCATIONS INDICATE POINT OF EXIT FROM WALLS, CEILINGS OR FLOORS.
H	ALL FLOOR DRAINS TO SET 1/2" BELOW FINISHED FLOOR UNLESS OTHERWISE NOTED. DO NOT SLOPE FLOORS SO CLOSE TO DRAINS AS TO CREATE "PITS" OR "DIPS" IN FLOOR. MINIMUM RADIUS OF SLOPE TO BE 24" FROM CENTERLINE OF DRAIN.

NOTE:

IT IS THE INTENTION OF THIS PLAN TO SHOW UTILITY REQUIREMENTS AND CONNECTION POINTS. DO NOT USE FOR ROUGHING-IN LOCATIONS. FOR ACTUAL ROUGHING-IN LOCATIONS REFER TO THE SHOP DRAWINGS PROVIDED BY THE KITCHEN EQUIPMENT CONTRACTOR.

INDIRECT WASTE LINES REQUIRED FOR STANDARD AND/OR FABRICATED ITEMS OF KITCHEN EQUIPMENT SHALL BE FURNISHED AND INSTALLED BY THE KITCHEN EQUIPMENT CONTRACTOR, EXCEPT FOR SINKS.

WATER INLET FITTINGS AND VALVE FOR THE SOILED DISHTABLE TROUGHS SHALL BE FURNISHED AND INSTALLED BY THE KITCHEN EQUIPMENT CONTRACTOR. PLUMBING CONTRACTOR SHALL PROVIDE COLD WATER SERVICE, ALL INTERCONNECTING PIPING, VACUUM BREAKERS AND MAKE FINAL CONNECTIONS.

THE KITCHEN EQUIPMENT CONTRACTOR TO PROVIDE ALL EQUIPMENT TRIM, INCLUDING FAUCETS, SINK WASTES AND SWING FAUCETS AT KETTLES AND RANGES, ALL TO BE INSTALLED BY THE PLUMBING CONTRACTOR.

ALL HORIZONTAL PIPING LINES CONNECTED AND EXTENDED FROM EQUIPMENT SHALL BE RUN AT THE HIGHEST POSSIBLE ELEVATION AND NOT LESS THAN 6" ABOVE THE FINISHED FLOOR TO PROVIDE AMPLE CLEARANCE FOR CLEANING. AT WALL OR COLUMN LOCATIONS, PIPING ROUGH-INS SHOULD BE STUBBED UP IN WALLS WHEREVER POSSIBLE.

COLD AND HOT WATER AT DISPOSER TO CONNECT TO MIXING VALVE AT 33"-AFF, THEN, FROM MIXING VALVE BACK INTO WALL WITH 3/4" PIPE TO HOSE REEL AT 84"-AFF. TEE COLD WATER TO DISPOSER BEFORE CONNECTING TO MIXING VALVE.

PLUMBER SHALL INSTALL AUTOMATIC SHUT-OFF VALVE FOR FUEL GAS. VALVE SHALL BE SOLENOID TYPE WIRED TO FIRE EXTINGUISHER.

PLUMBING LEGEND

SYMBOLS		ABBREVIATIONS	
●	HOT/COLD WATER	HW	HOT WATER
◉	STUB-UP WATER	CW	COLD WATER
●	DRAIN	DR	DRAIN
○	CONNECTION	AFF	ABOVE FINISHED FLOOR
	FLOOR DRAIN AS NOTED	FD	FLOOR DRAIN
	FLOOR SINK (4" X 10")	FS	FLOOR SINK
	FLOOR SINK HALF GRATE	FT	FLOOR TROUGH
	GAS LINE	HD	HUB DRAIN
	GAS CONNECTION	GPH	GALLONS PER HOUR
	FLEX CONNECT HOSE	GPM	GALLONS PER MINUTE
	INDIRECT WASTE LINE	BTC	BRANCH TO CONNECT
	PLUMBING INTERCONNECTION	PSI	POUNDS PER SQUARE INCH
	STEAM SUPPLY	DFA	DOWN FROM ABOVE
	STEAM RETURN	SS	STEAM SUPPLY
	STEAM CONNECTION	SR	STEAM RETURN

PLUMBING GENERAL NOTES

1. SEE EQUIPMENT PLAN AND SCHEDULE OF EQUIPMENT FOR ADDITIONAL INFORMATION.
2. P.C. TO PROVIDE ALL ROUGH-IN AND FINAL CONNECTIONS TO ALL EQUIPMENT SHOWN HEREIN.
3. SOLID DOT REPRESENTS ROUGH-IN LOCATION. (FURNISHED BY P.C.)
   DOTTED LINE REPRESENTS FINAL CONNECTION. (FURNISHED BY P.C.)
   CIRCLE REPRESENTS CONNECTION TO EQUIPMENT. (FURNISHED BY P.C.)
4. PLUMBING CONTRACTOR (P.C.) TO KEEP ALL PLUMBING LINES CLEAR OF WALLBACKING AREAS.
5. P.C. TO PROVIDE AND INSTALL REGULATORS AS REQUIRED.

FOODSERVICE CONSULTANT:

LANDMARK KITCHEN DESIGN, LLC
ARIZONA • NEW ENGLAND
TEL: (602) 443-5364
info@landmarkfsc.com
www.landmarkfsc.com

TENANT IMPROVEMENT FOR

FAMOUS FOR Steak 'n Shake STEAKBURGERS

1966 WEST AVE L
LANCASTER, CA

4-24-18	BUILDING DEPT SUBMITTAL
1	
2	
3	
4	

EQUIPMENT PLUMBING ROUGH-INS

FS-4.0

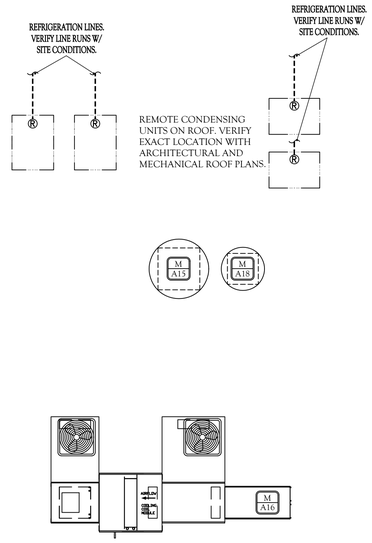

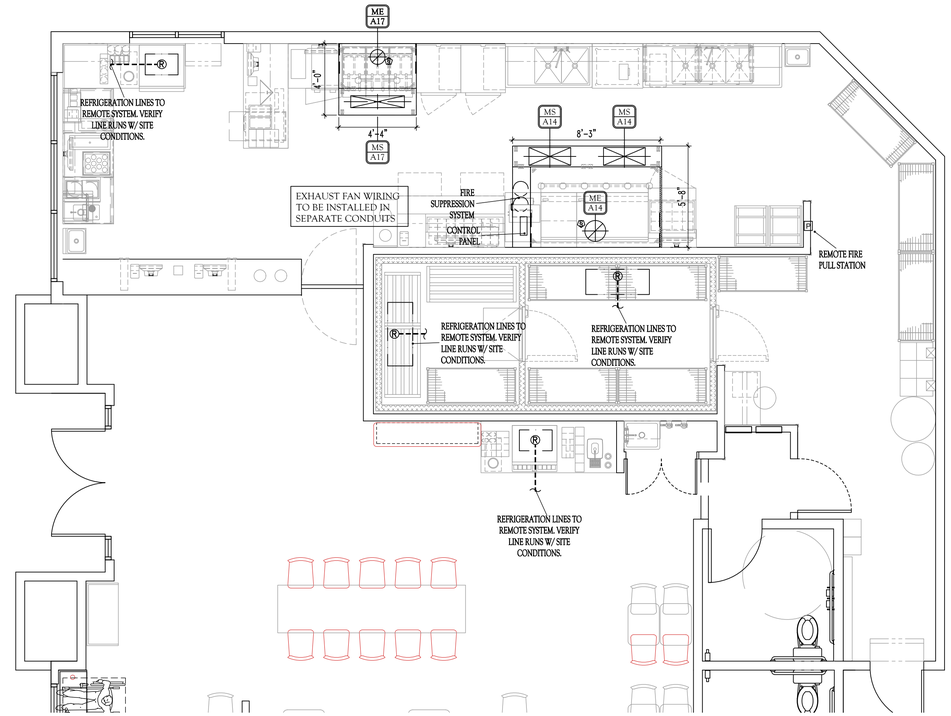

FLOOR PLAN

SCALE: 1/4" = 1'-0"

MECHANICAL ROUGH-IN SCHEDULE

ITEM	QUA	TAG	HOOD SIZE			AIR FLOW REQUIREMENTS					HOOD WEIGHT (LBS.)
			L	W	H	EXHAUST C.F.M.	SUPPLY C.F.M.	EXHAUST SIZE	SUPPLY SIZE	TOTAL HOOD INCHES W.C.	
A14	1	MEA14	87"	54"	30"	1,812		14" Ø		-0.785"	705
A14	3	MSA14	100"	14"	6"		770 (EA)		12" X 28"	0.222"	
A17	1	MEA17	52"	30"	14"	900		10" Ø		-0.844"	257
A17	1	MSA17	52"	18"	6"		630		8" x 36"	0.177"	

MECHANICAL SYSTEM NOTES:

1. EXHAUST HOOD REQUIREMENTS AND DUCT COLLAR SIZES SHALL BE COORDINATED WITH FINAL SHOP DRAWINGS PRIOR TO FABRICATION.
2. ALL FINAL DUCT WELDING AND CONNECTIONS TO BE INCLUDED IN THE GC CONTRACT.
3. DUCTWORK, EXHAUST AND MUA FANS TO BE INSTALLED BY THE GC'S MECHANICAL CONTRACTOR.
4. PROVIDE DISCONNECT ON ROOF FOR EXHAUST AND M.U.A. FANS.
5. ELECTRICAL EQUIPMENT UNDER EXHAUST HOOD MUST HAVE SHUNT TRIP BREAKERS AT ELECTRICAL PANEL CONNECTED TO MICROSWITCHES IN THE FIRE SYSTEM.
6. K.E.C. IS TO PROVIDE CLOSURE TRIM PANELS FROM TOP OF HOOD TO CEILING & S/S WALL PANELS

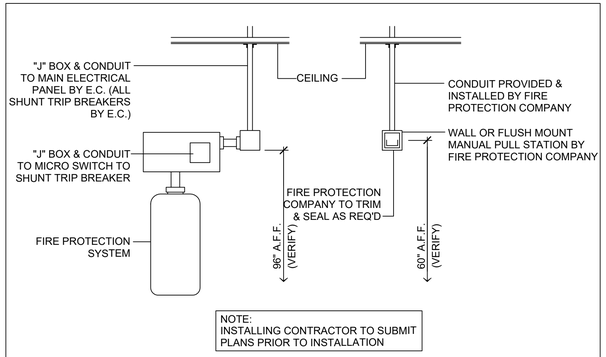

NOTE:
INSTALLING CONTRACTOR TO SUBMIT PLANS PRIOR TO INSTALLATION

2 - TYPICAL FIRE PROTECTION SYSTEM

NOT TO SCALE

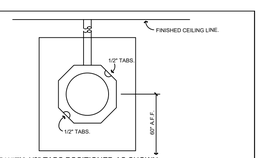

4/0 BOXE WITH 1/2" TABS POSITIONED AS SHOWN WITH TABS IN UPPER RIGHT AND LOWER LEFT OF BOX. BOXES TO BE 60" ABOVE FINISHED FLOOR. 1/2" E.M.T. TO BE 12" ABOVE FINISHED DROP CEILING LINE WITHOUT BENDS OR OFFSETS. ONE (1) 4/0 BOX TO BE PROVIDED FOR EACH REMOTE PULL STATION. WHEN TWO (2) REMOTE BOXES ARE MOUNTED SIDE-BY-SIDE THE DISTANCE BETWEEN CENTERS SHALL NOT BE LESS THAN 7". CONDUIT AND 4/0 BOX WITH 1/2" TABS BY ELECTRICAL CONTRACTOR.

3 - RECESSED REMOTE FIRE PULL DETAIL

NOT TO SCALE

NOTE:
REFER TO ENGINEERING HOOD DATA SHEETS FOR COMPLETE CFM REQUIREMENTS.

NOTE:
1. REFRIGERATION LINES ARE FOR SCHEMATIC PURPOSES ONLY.
2. K.E.C. AND G.C. TO VERIFY EXACT LOCATION OF REFRIGERATION UNITS ON ROOF WITH ARCHITECT PRIOR TO INSTALLATION.

FOODSERVICE CONSULTANT:
LANDMARK KITCHEN DESIGN, LLC
ARIZONA • NEW ENGLAND
TEL: (602) 443-5364
info@landmarkfsc.com
www.landmarkfsc.com

TENANT IMPROVEMENT FOR

FAMOUS FOR Steak 'n Shake STEAKBURGERS

1966 WEST AVE L
LANCASTER, CA

9-24-18	BUILDING DEPT SUBMITTAL
1	
2	
3	
4	

EQUIPMENT MECHANICAL PLAN

FS-5.0

1/2" DIA. ALL THREAD ROD CONNECTED TO ROOF JOIST THROUGH ANOTHER HANGING ANGLE

1/2" DIA. HEAVY DUTY NUT ONE ABOVE AND TWO BELOW HANGING ANGLE

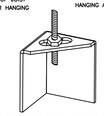

* ROD AND NUTS TO BE SUPPLIED BY INSTALLING CONTRACTOR
HANGING ANGLE IS PRE-PUNCHED AT FACTORY

HANGING ANGLE DETAILS

HOOD STYLE / MODEL	450 DEGREES cfm/ft.	600 DEGREES cfm/ft.	700 DEGREES cfm/ft.
CANOPY ND2	150	200	250
WITH END PANELS (15% reduction)	127.5	170	212.5
SLOPED SND-2	228	294	–
ISLAND ND-2WI	269	300	350
NDI	346	422	475

ETL HOOD LISTING DETAIL

EXHAUST CFM=LENGTH OF HOOD X CFM/LIN.FT. (LOAD)

SUPPLY CFM=EXHAUST CFM X PERCENTAGE REQUIRED

TOTAL DUCT AREA=144 X $\frac{\text{CFM}}{\text{FPM(*)}}$

DUCT LENGTH= $\frac{\text{TOTAL DUCT AREA}}{\text{DUCT DEPTH}}$

* CAPTIVE-AIRE VENTILATOR DUCT SIZES ARE CALCULATED USING AN EXHAUST VELOCITY OF 1500-1800 FPM AND A SUPPLY VELOCITY OF 1000 FPM.

CALCULATIONS UTILIZED

CAPTIVE-AIRE HOODS ARE BUILT IN COMPLIANCE WITH:

LISTED #3054804-001 & #3054804-002 — STANDARD 710 — Intertek — BUILT IN ACCORDANCE WITH No. 96

Listed under ETL File number 3054804-001/002

BUILDING CODES

CAPTIVE-AIRE HOODS HAVE OPTIONAL CLEARANCE REDUCTION SYSTEMS AVAILABLE AS FOLLOWS:

MATERIAL	CLEARANCE REDUCTION SYSTEM
NON-COMBUSTIBLE	NONE REQUIRED
LIMITED-COMBUSTIBLE	3" UNINSULATED STANDOFF
COMBUSTIBLE	1" INSULATED STANDOFF

CLEARANCE TO COMBUSTIBLES

INSTALLATION

1. ALL ELECTRICAL "FIELD" CONNECTIONS AND RELATED INTERCONNECTIONS BY ELECTRICAL CONTRACTORS.
2. ALL PLUMBING "FIELD" CONNECTIONS AND RELATED INTERCONNECTIONS BY PLUMBING CONTRACTORS.
3. HANGING BRACKETS LOCATED AND WELDED AS SHOWN ON PLANS. ALL OTHER HANGER MATERIALS PROVIDED BY INSTALLING CONTRACTORS.
4. ALL CONNECTIONS FROM CAPTIVE-AIRE DUCT PER MECHANICAL CONTRACTOR'S PLANS.
5. COOKING EQUIPMENT TO SHUTOFF IN EVENT OF FIRE.
6. EXHAUST FANS TO TURN ON IN EVENT OF FIRE.
7. ALL LIGHTS FIXTURE SHOWN INSTALLED BY CAPTIVE-AIRE ARE FACTORY PREWIRED. INTERCONNECTIONS BETWEEN HOODS AND TO SWITCHES BY ELECTRICAL CONTRACTORS.
8. LAMPS FOR LIGHT FIXTURES BY INSTALLING CONTRACTORS.
9. SEISMIC RESTAINTS ARE RESPONSIBILITY OF INSTALLING CONTRACTOR.
10. INSTALLING CONTRACTORS ASSUME ALL RELATED REPONSIBILITY FOR VERIFICATION OF DIMENSIONAL DATA CONTAINED ON THESE DOCUMENTS FOR ACCURACY, INTEGRATION, AND ADMINISTRATION OF CODE REQUIREMENTS IN EFFECT PRIOR TO ANY RELEASE FOR PRODUCTION OF EQUIPMENT SHOWN.

BALANCE

11. KITCHEN HOODS MUST BE BALANCED WITH KITCHEN.
12. KITCHEN SHALL BE NEGATIVE WITH RESPECT TO DINING AREA.
13. RESTAURANT SHALL BE POSITIVE WITH RESPECT TO AMBIENT PRESSURE.

ADDITIONAL

14. WRITTEN HOOD DIMENSIONS HAVE PRECEDENCE OVER SCALE.
15. SIGNED AND "APPROVED" COPIES OF THIS DOCUMENT MUST BE RECEIVED BY THE FACTORY PRIOR TO COMMENCEMENT OF FABRICATION.

GENERAL NOTES

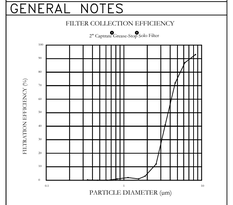

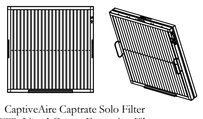

CaptiveAire Captrate Solo Filter
ETL Listed Grease Extracting Filters
Made From 430 Stainless Steel

FILTER DETAIL

HOOD INFORMATION – Job#3864344

HOOD NO.	TAG	MODEL	LENGTH	MAX. COOKING TEMP.	TOTAL EXH. CFM	EXHAUST PLENUM RISER(S) WIDTH	LENG.	HEIGHT	DIA.	CFM	VEL.	S.P.	TOTAL SUPPLY CFM	HOOD CONSTRUCTION	HOOD CONFIG. END TO END	ROW
1		5430 ND-2-PSP-F	7' 3"	600 Deg.	1812			4"	14"	1812	1695	-0.785"	1540	430 SS Where Exposed	ALONE	ALONE
2		3044 BD-2-PSP-F	4' 4"	450 Deg.	900			4"	10"	900	1650	-0.844"	630	430 SS Where Exposed	ALONE	ALONE

PATENT NUMBERS

AC-PSP (United States) - US Patent 7963830 B2
AC-PSP Wall (Canada) - CA Patent 2820509
AC-PSP Island (Canada) - CA Patent 2520330

HOOD INFORMATION

HOOD NO.	TAG	FILTER(S) TYPE	QTY.	HEIGHT	LENGTH	EFFICIENCY @ 7 MICRONS	LIGHT(S) QTY.	TYPE	WIRE GUARD	UTILITY CABINET(S) LOCATION	SIZE	FIRE SYSTEM TYPE	FIRE SYSTEM SIZE	ELECTRICAL MODEL #	SWITCHES QUANTITY	FIRE SYSTEM PIPING	HOOD HANGING WGHT
1		Captrate Solo Filter	5	20"	16"	85% See Filter Spec.	6	Screw In 12W LED	NO	Right	12"x54"x30"	Ansul R102	3.0/3.0	DCV-2111	1 Light 1 Fan	YES	705 LBS
2		Captrate Solo Filter	3	16"	16"	85% See Filter Spec.	2	Screw In 12W LED	NO							YES	257 LBS

HOOD OPTIONS

HOOD NO.	TAG	OPTION
1		FIELD WRAPPER 14.00" High Front, Left, Right
		BACKSPLASH 80.00" High X 100.00" Long 430 SS Vertical
		BACKSPLASH 122.00" High X 18.00" Long 430 SS Vertical
		BACKSPLASH 122.00" High X 18.00" Long 430 SS Vertical
		LEFT END STANDOFF (FINISHED) 1" Wide 54" Long Insulated
		RIGHT QUARTER END PANEL 23" Top Width, 0" Bottom Width, 23" High 430 SS
		LEFT QUARTER END PANEL 23" Top Width, 0" Bottom Width, 23" High 430 SS
2		FIELD WRAPPER 37.00" High Front, Left, Right
		BACKSPLASH 122.00" High X 88.00" Long 430 SS Vertical
		RIGHT QUARTER END PANEL 20" Top Width, 0" Bottom Width, 20" High 430 SS
		LEFT QUARTER END PANEL 20" Top Width, 0" Bottom Width, 20" High 430 SS
		SENSOR-CV

PERFORATED SUPPLY PLENUM(S)

HOOD NO.	TAG	POS.	LENGTH	WIDTH	HEIGHT	TYPE	RISER(S) WIDTH	LENG.	DIA.	CFM	S.P.
1		Front	100"	14"	6"	MUA	12"	28"		770	0.222"
						MUA	12"	28"		770	0.222"
2		Front	52"	18"	6"	MUA	8"	36"		630	0.177"

FOR QUESTIONS, CALL DAVE MILLER
INDIANA REGIONAL ENGINEERING OFFICE
20 E. AIRPORT ROAD, BROWNSBURG, IN 46112
PHONE(317) 852-3770, (800) 863-4696
FAX (888) 515-5929 reg56@captiveaire.com

*** NOTE ***
ALL WALLS AND STRUCTURES THAT COME WITHIN 18" OF HOOD MUST BE METAL STUDS AND SHEETROCK. WOOD STUDS OR ANY OTHER COMBUSTIBLE MATERIAL WITHIN 18" OF HOOD NOT ALLOWED

*** NOTE ***
HOOD MANUFACTURER RECOMMENDS NO RETURNS OR 4-WAY DIFFUSERS WITHIN 10 FEET OF HOOD IN ALL DIRECTIONS.

NOTE
IT IS HIGHLY RECOMMENDED NOT TO INSTALL HIGH VELOCITY OR FOUR-WAY DIFFUSERS OR AIR RETURNS W/I 10 FT OF THE HOOD. PERFORATED DIFFUSERS ARE RECOMMENDED.

*** NOTE ***
MAKE-UP AIR SHALL BE DELIVERED INTO SPACE IN MANNER THAT WILL NOT DISRUPT HOODS ABILITY TO CAPTURE AND CONTAIN.

System Design Verification (SDV)

If ordered, CAS Service will perform a System Design Verification (SDV) once all equipment has had a complete start up per the Operation and Installation Manual. Typically, the SDV will be performed after all inspections are complete.

Any field related discrepancies that are discovered during the SDV will be brought to the attention of the general contractor and corresponding trades on site. These issues will be documented and forwarded to the appropriate sales office. If CAS Service has to resolve a discrepancy that is a field issue, the general contractor will be notified and billed for the work. Should a return trip be required due to any field related discrepancy that cannot be resolved during the SDV, there will be additional trip charges.

During the SDV, CAS Service will address any discrepancy that is the fault of the manufacturer. Should a return trip be required, the general contractor and appropriate sales office will be notified. There will be no additional charges for manufacturer discrepancies.

REVISIONS

DESCRIPTION	DATE:

CAPTIVE-AIRE
www.captiveaire.com
Indiana Office
20 E. Airport Rd. Ste. 100, Brownsburg, IN. 46112 PHONE: (317) 852-3770 FAX: (919) 227-5929 EMAIL: reg56@captiveaire.com

SNS LANCASTER, CA
LANCASTER, CA, 93536

DATE: 6/11/2019

DWG.#: 3864344

DRAWN BY: DCM-56

SCALE: 3/4" = 1'-0"

MASTER DRAWING

SHEET NO. 1

FOODSERVICE CONSULTANT:
LANDMARK KITCHEN DESIGN, LLC
ARIZONA • NEW ENGLAND
TEL: (602) 443-5364
info@landmarkfs.com
www.landmarkfs.com

TENANT IMPROVEMENT FOR

Steak 'n Shake — FAMOUS FOR STEAKBURGERS

1966 WEST AVE L
LANCASTER, CA

4-24-18	BUILDING DEPT SUBMITTAL
1	
2	
3	
4	

EXHAUST HOOD SHOP DRAWING

FS-5.1

DuctWork #2 Parts – Job#3864344

Tag	Part #	CFM	S.P.	Weight	Velocity	QTY	Description
P1	DW1045ASY	900	-0.0438	4.62	1650.12	1	Single Wall Duct 45 Degree Elbow, 10" Duct, Assembly.
P2	DW1045ASY	900	-0.0625	4.62	1650.12	1	Single Wall Duct 45 Degree Elbow, 10" Duct, Assembly.
P3	DW1047LT	900	-0.0268	15.72	1650.12	1	Single Wall Duct 10" diameter, 47" long, flange at both ends. Stainless Steel.
P4	DW1029LT	900	-0.0165	9.75	1650.12	1	Single Wall Duct 10" diameter, 29" long, flange at both ends. Stainless Steel.
P5 Assembled w/P6	DW1048AJDKIT	900	-0.0137	18.63	1650.12	1	Single Wall Duct Adjustable, 10" diameter, 47.5" long, flange at one end With a 10" Adjustable Collar - Stainless Steel.
P6 Assembled w/P5	DW1910TP	900	0	6.62	1650.12	1	Duct to Curb Transition, 19-1/2" Curb to 10" Duct, 16 GA Aluminized. Misc. non-standard transition plate.
System at P6		900	-1.0073				
	3M-2000PLUS			0.80		1	Duct - 3M Fire Barrier 2000 Plus Silicone - Used as sealant to Seal Duct Joints.
	735602000			52.00		3	Duct - Duct insulation for zero clearance to combustibles - 300" x 24" x 1-1/2" Roll. Unifrax FyreWrap Elite 1.5.
	BANDING.5			5.00		1	Duct - Fire Barrier Wrap Stainless Steel Banding .5" Width - 200 FT Per Roll.
	DW10CLASY			1.10		5	Duct "V" Clamp With new design 14 Ga Brackets, 10" Duct, Assembly.
	SEAL.50-50			0.50		2	Duct - Fire Barrier Wrap Stainless Steel Banding Seal .5" Width. Quantity of 50.
	TAPEALUM			0.25		1	Duct - Fire Barrier Wrap Aluminum Foil Tape - 3" x 150' Roll.
Total Weight				228.51			

SINGLE WALL FACTORY BUILT DUCTWORK

- ALL DUCTWORK IS REQUIRED TO BE INSTALLED WITH THE MAXIMUM SUPPORT SPACING LISTED BELOW.
- FOR A COMPLETE LIST OF APPROVED SUPPORT METHODS, SEE THE INSTALLATION AND OPERATION MANUAL.
- DUCTWORK SHALL SLOPE NOT LESS THAN 1/16" PER LINEAR FOOT TOWARDS THE HOOD OR AN APPROVED GREASE COLLECTION RESERVOIR.
- WHERE HORIZONTAL DUCTS EXCEED 75 FEET IN LENGTH, THE SLOPE SHALL NOT BE LESS THAN 3/16" PER LINEAR FOOT.

DUCT DIAMETER	HORIZONTAL SUPPORT (ft)	VERTICAL WALL SUPPORT (ft)	VERTICAL CURB SUPPORT (ft)
8"	10'	10'	24'
10"	10'	10'	24'
12"	10'	10'	24'
14"	10'	10'	24'
16"	10'	10'	24'
18"	10'	10'	24'
20"	10'	10'	24'
22"	10'	10'	24'
24"	10'	10'	24'

DuctWork #2 Front View

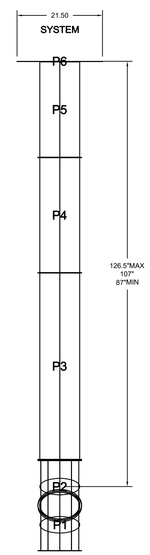

DuctWork #2 Top View

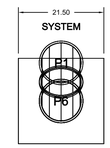

DuctWork #2 Side View

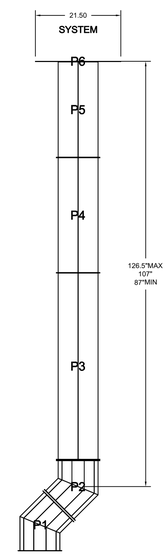

DuctWork #2 SE View

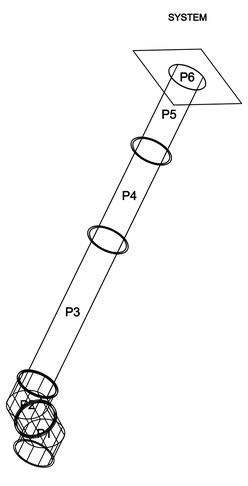

REVISIONS

DESCRIPTION	DATE:

CAPTIVEAIRE

www.captiveaire.com

Indiana Office

20 E. Airport Rd. Ste. 100, Brownsburg, IN, 46112 PHONE: (317) 852-3770 FAX: (919) 227-5929 EMAIL: reg56@captiveaire.com

SNS LANCASTER, CA

LANCASTER, CA, 93536

DATE: 6/11/2019

DWG.#: 3864344

DRAWN BY: DCM-56

SCALE: 3/4" = 1'-0"

MASTER DRAWING

SHEET NO. 10

FOODSERVICE CONSULTANT:

LANDMARK KITCHEN DESIGN, LLC

ARIZONA • NEW ENGLAND
TEL: (602) 443-5364
info@landmarkfsc.com
www.landmarkfsc.com

TENANT IMPROVEMENT FOR

FAMOUS FOR Steak 'n Shake STEAKBURGERS

1966 WEST AVE L
LANCASTER, CA

9-24-18	BUILDING DEPT SUBMITTAL
1	
2	
3	
4	

EXHAUST HOOD SHOP DRAWING

FS-5.10

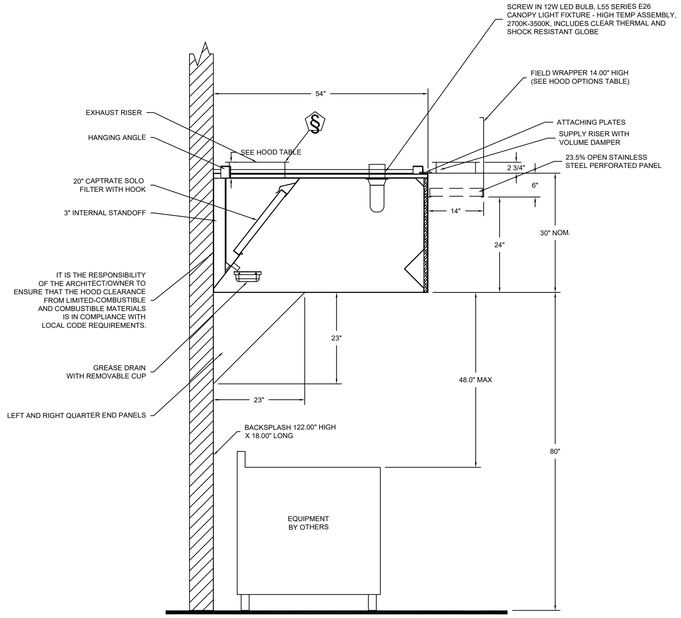

SECTION VIEW – MODEL 5430ND-2-PSP-F
HOOD – #1

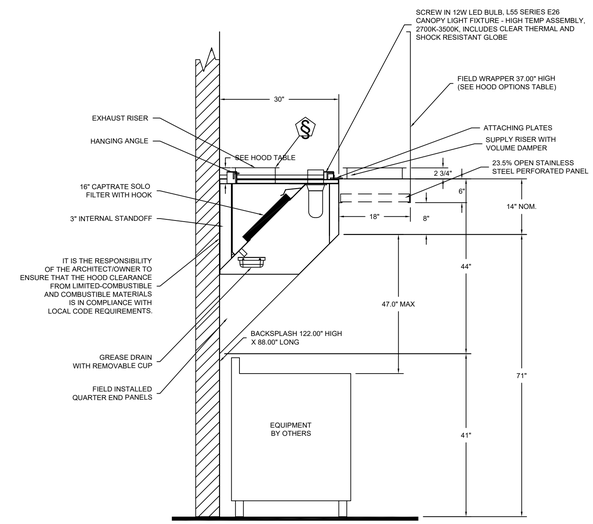

SECTION VIEW – MODEL 3044BD-2-PSP-F
HOOD – #2

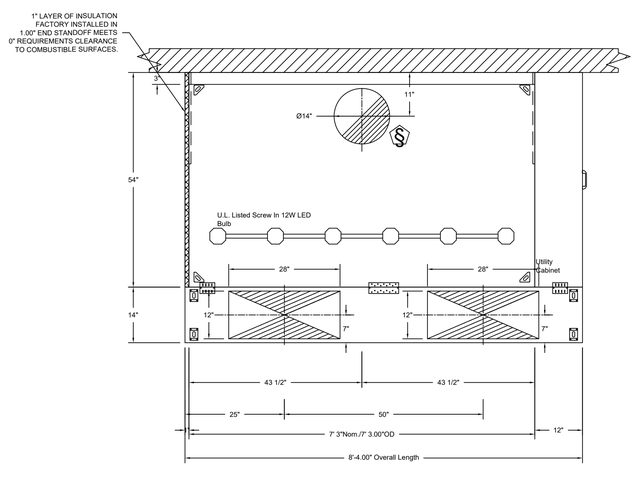

PLAN VIEW – Hood #1
7' 3.00" LONG 5430ND-2-PSP-F

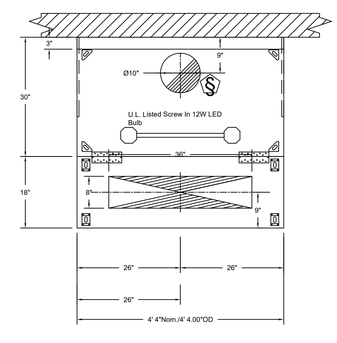

PLAN VIEW – Hood #2
4' 4.00" LONG 3044BD-2-PSP-F

REVISIONS

	DESCRIPTION	DATE:
1		
2		
3		
4		

CAPTIVEAIRE
www.captiveaire.com

Indiana Office
20 E. Airport Rd. Ste. 100, Brownsburg, IN, 46112 PHONE: (317) 852-3770 FAX: (919) 227-5929 EMAIL: reg56@captiveaire.com

SNS LANCASTER, CA
LANCASTER, CA, 93536

DATE: 6/11/2019

DWG.#: 3864344

DRAWN BY: DCM-56

SCALE: 3/4" = 1'-0"

MASTER DRAWING

SHEET NO. 2

FOODSERVICE CONSULTANT:
LANDMARK KITCHEN DESIGN, LLC
ARIZONA • NEW ENGLAND
TEL: (602) 443-5364
info@landmarkfs.com
www.landmarkfs.com

TENANT IMPROVEMENT FOR
Steak 'n Shake
1966 WEST AVE L
LANCASTER, CA

9-24-18	BUILDING DEPT SUBMITTAL
1	
2	
3	
4	

EXHAUST HOOD SHOP DRAWING

FS-5.2

Fire System Information – Job#3864344

FIRE SYSTEM NO.	Tag	TYPE	SIZE	FLOW POINTS	INSTALLATION	
					SYSTEM	LOCATION ON HOOD
1		Ansul R102	3.0/3.0	17	Fire Cabinet Right	Right

CAS VALVE(S)

FIRE SYSTEM NO.	TAG	TYPE	SIZE	SUPPLIED BY
1		Mechanical	1.500	Distributor

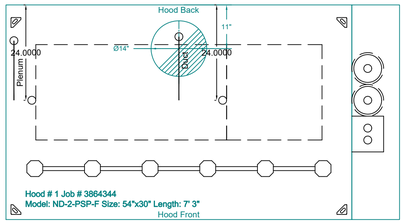

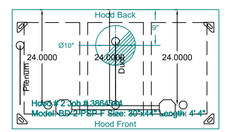

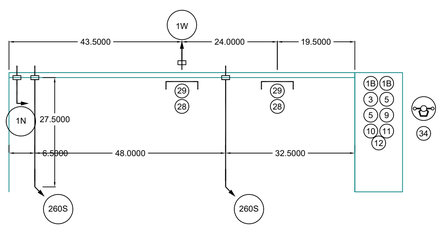

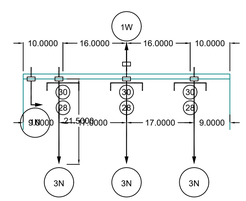

NOTES
- FIELD PIPE DROPS AS SHOWN
  SLEEVING, ELBOWS, TEES, AND NOZZLES SUPPLIED BY CAS
- RELOCATE NOZZLES IF FLOW PATTERN IS BLOCKED BY SHELVING, SALAMANDERS, ETC.
- MAXIMUM 9 ELBOWS IN SUPPLY LINE.
- MINIMUM 72 INCHES OF AGENT LINE FROM TANK TO FIRST NOZZLE.
- IF APPLICABLE, PRE-PIPED CHARBROILER DROPS ARE SHIPPED LOOSE.
- FACTORY PIPING EXTENDS A MAXIMUM OF 6" ABOVE THE TOP OF THE HOOD.

- APPLIANCE DIMENSIONS LISTED REPRESENT THE COOKING SURFACE SIZE, NOT THE OVERALL APPLIANCE SIZE.

- THIS FIRE SYSTEM COMPLIES WITH U.L. 300 REQUIREMENTS

Job #: 3864344
Job Name: SNS LANCASTER, CA

System Size: ANSUL-3.0/3.0 Total FP required: 17
Hood # 1 7' 3.00" Long x 54" Wide x 30" High
Riser # 1 Size: 14" Dia.
Hood # 1 Metal Blow-Off Caps included.
Hood # 2 4' 4.00" Long x 30" Wide x 44" High
Riser # 1 Size: 10" Dia.
Hood # 2 Metal Blow-Off Caps included.

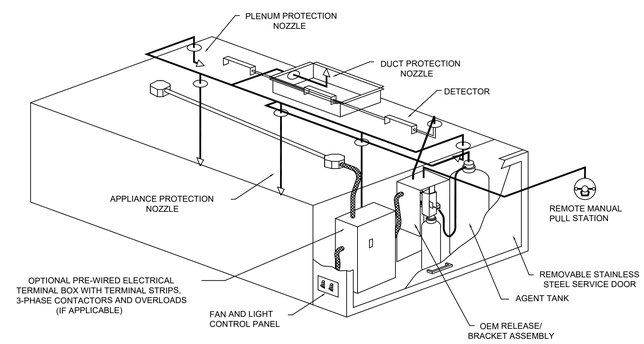

TYPICAL ANSUL R-102 SYSTEM LAYOUT

REVISIONS

DESCRIPTION	DATE:

CAPTIVEAIRE
www.captiveaire.com
Indiana Office
20 E. Airport Rd. Ste. 100, Brownsburg, IN. 46112 PHONE: (317) 852-3770 FAX: (919) 227-5929 EMAIL: reg26@captiveaire.com

SNS LANCASTER, CA
LANCASTER, CA, 93536

DATE: 6/11/2019

DWG.#: 3864344

DRAWN BY: DCM-56

SCALE: 3/4" = 1'-0"

MASTER DRAWING

SHEET NO. 3

FOODSERVICE CONSULTANT:
LANDMARK KITCHEN DESIGN, LLC
ARIZONA • NEW ENGLAND
TEL: (602) 443-5364
info@landmarkfsc.com
www.LandmarkFsc.com

TENANT IMPROVEMENT FOR
Steak 'n Shake — FAMOUS FOR STEAKBURGERS
1966 WEST AVE L
LANCASTER, CA

9-24-18	BUILDING DEPT SUBMITTAL
1	
2	
3	
4	

EXHAUST HOOD SHOP DRAWING

FS-5.3

EXHAUST FAN INFORMATION – Job#3864344

FAN UNIT NO.	TAG	FAN UNIT MODEL #	CFM	ESP.	RPM	H.P.	B.H.P.	Ø	VOLT	FLA	DISCHARGE VELOCITY	WEIGHT (LBS.)	SONES
1		DU50HFA	900	1.100	1500	0.500	0.3680	3	208	2.0	342 FPM	87	15.9
2		DU180HFA	1812	1.150	1062	1.000	0.5440	3	208	3.8	418 FPM	148	12.4

CONDENSER DETAILS

FAN UNIT NO.	TAG	FAN UNIT MODEL #	CONDENSER NO.	TONNAGE	VOLTAGE	PHASE	FREQUENCY	MCA	RLA	MAX. FUSE SIZE	MIN. WIRE SIZE	SEER
3		A1-15D-MPU	1	2.5	208-230	3 PHASE	60 Hz	11.2 Amps	9.07 Amps	20 Amps	14 AWG	14
			2	2.5	208-230	3 PHASE	60 Hz	11.2 Amps	9.07 Amps	20 Amps	14 AWG	14

MUA FAN INFORMATION – Job#3864344

FAN UNIT NO.	TAG	FAN UNIT MODEL #	BLOWER	HOUSING	MIN CFM	DESIGN CFM	ESP.	RPM	H.P.	B.H.P.	Ø	VOLT	FLA	COOLING COIL ENTERING DB TEMP.	COOLING COIL ENTERING WB TEMP.	COOLING COIL LEAVING DB TEMP.	COOLING COIL LEAVING WB TEMP.	COOLING COIL TOTAL CAPACITY	COOLING COIL SENSIBLE CAPACITY	COOLING COIL LATENT CAPACITY	WEIGHT (LBS.)	SONES
3		A1-15D-MPU	15MF-1-MOD	A1	-	2170	0.575	2168	2.000	1.4340	3	208	6.1	100.0°F	65.0°F	73.2°F	55.9°F	54.1 MBH	54.1 MBH	0.0 MBH	1238	31

FAN OPTIONS

FAN UNIT NO.	TAG	OPTION (Qty. - Descr.)
1		1 - Grease Box
		1 - Fan Base Ceramic Seal - Ship Loose - For Grease Ducts
2		1 - Grease Box
3		1 - 5 Ton 2 Circuit (2.5/2.5) Modular Packaged Cooling Option for Size 1 MUA (1,800 to 3,000 cfm), 208V/230V, 3 phase. Cooling Thermostat or Programmable Stat Required for Proper Operation.
		1 - Insulated Blower Section Size 1-2 Commercial
		1 - Mod Package Unit AC Controls for Untempered Fans
		1 - Condenser Support for Size 1 Mod Package Unit
		1 - Motorized Backdraft Damper for Size 1 Housing
		1 - Condenser Sled Option for size 1 double condenser MPUs.
		1 - Condensing Unit Locking Caps For Double Condenser Units.
		1 - Separate 120V Wiring Package (Required and used only for DCV or Prewire with VFD) - Three Phase Only

FAN ACCESSORIES

FAN UNIT NO.	TAG	EXHAUST			SUPPLY			
		GREASE CUP	GRAVITY DAMPER	WALL MOUNT	SIDE DISCHARGE	GRAVITY DAMPER	MOTORIZED DAMPER	WALL MOUNT
1		YES						
2		YES						
3							YES	

CURB ASSEMBLIES

NO.	ON FAN	WEIGHT	ITEM	SIZE
1	# 1	53 LBS	Curb	19.500"W x 19.500"L x 24.000"H Vented Hinged 16 Gauge
2	# 2	92 LBS	Curb	26.500"W x 26.500"L x 20.000"H Vented Hinged 16 Gauge
3	# 3	186 LBS	Rail	6.000"W x 21.000"L x 15.000"H
	# 3		Rail	6.000"W x 21.000"L x 15.000"H
	# 3		Rail	6.000"W x 21.000"L x 15.000"H
	# 3		Rail	6.000"W x 21.000"L x 15.000"H
3	# 3	186 LBS	Curb	21.000"W x 21.000"L x 15.000"H 16 Gauge

FAN #2 DU180HFA - EXHAUST FAN

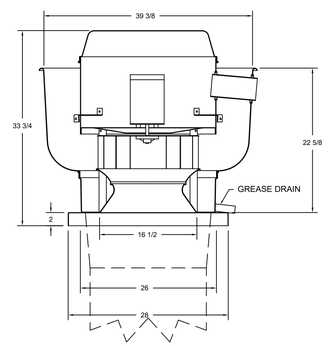

FEATURES:

- DIRECT DRIVE CONSTRUCTION (NO BELTS/PULLEYS)
- ROOF MOUNTED FANS
- RESTAURANT MODEL
- UL705 AND UL762 AND ULC-S645
- VARIABLE SPEED CONTROL
- INTERNAL WIRING
- WEATHERPROOF DISCONNECT
- THERMAL OVERLOAD PROTECTION (SINGLE PHASE)
- HIGH HEAT OPERATION 300°F (149°C)
- GREASE CLASSIFICATION TESTING

NORMAL TEMPERATURE TEST
EXHAUST FAN MUST OPERATE CONTINUOUSLY WHILE EXHAUSTING AIR AT 300°F (149°C) UNTIL ALL FAN PARTS HAVE REACHED THERMAL EQUILIBRIUM, AND WITHOUT ANY DETERIORATING EFFECTS TO THE FAN WHICH WOULD CAUSE UNSAFE OPERATION.

ABNORMAL FLARE-UP TEST
EXHAUST FAN MUST OPERATE CONTINUOUSLY WHILE EXHAUSTING BURNING GREASE VAPORS AT 600°F (316°C) FOR A PERIOD OF 15 MINUTES WITHOUT THE FAN BECOMING DAMAGED TO ANY EXTENT THAT COULD CAUSE AN UNSAFE CONDITION.

OPTIONS

GREASE BOX.

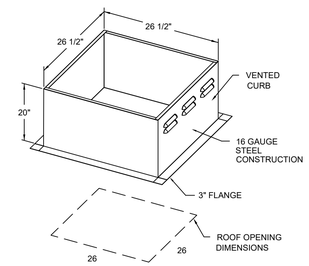

PITCHED CURBS ARE AVAILABLE FOR PITCHED ROOFS.

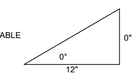

SPECIFY PITCH:
EXAMPLE: 7/12 PITCH = 30° SLOPE

FAN #1 DU50HFA - EXHAUST FAN

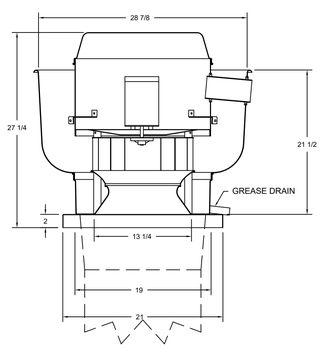

FEATURES:

- DIRECT DRIVE CONSTRUCTION (NO BELTS/PULLEYS)
- ROOF MOUNTED FANS
- RESTAURANT MODEL
- UL705 AND UL762 AND ULC-S645
- VARIABLE SPEED CONTROL
- INTERNAL WIRING
- WEATHERPROOF DISCONNECT
- THERMAL OVERLOAD PROTECTION (SINGLE PHASE)
- HIGH HEAT OPERATION 300°F (149°C)
- GREASE CLASSIFICATION TESTING

NORMAL TEMPERATURE TEST
EXHAUST FAN MUST OPERATE CONTINUOUSLY WHILE EXHAUSTING AIR AT 300°F (149°C) UNTIL ALL FAN PARTS HAVE REACHED THERMAL EQUILIBRIUM, AND WITHOUT ANY DETERIORATING EFFECTS TO THE FAN WHICH WOULD CAUSE UNSAFE OPERATION.

ABNORMAL FLARE-UP TEST
EXHAUST FAN MUST OPERATE CONTINUOUSLY WHILE EXHAUSTING BURNING GREASE VAPORS AT 600°F (316°C) FOR A PERIOD OF 15 MINUTES WITHOUT THE FAN BECOMING DAMAGED TO ANY EXTENT THAT COULD CAUSE AN UNSAFE CONDITION.

OPTIONS

GREASE BOX.
FAN BASE CERAMIC SEAL - SHIP LOOSE - FOR GREASE DUCTS.

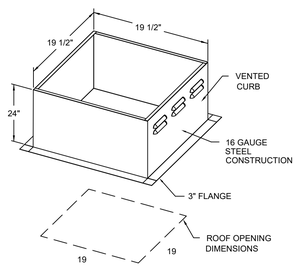

PITCHED CURBS ARE AVAILABLE FOR PITCHED ROOFS.

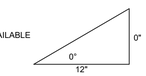

SPECIFY PITCH:
EXAMPLE: 7/12 PITCH = 30° SLOPE

REVISIONS

DESCRIPTION	DATE:

CAPTIVEAIRE
www.captiveaire.com
Indiana Office
20 E. Airport Rd. Ste. 100, Brownsburg, IN. 46112 PHONE: (317) 852-3770 FAX: (919) 227-5929 EMAIL: reg56@captiveaire.com

SNS LANCASTER, CA
LANCASTER, CA, 93536

DATE: 6/11/2019

DWG.#: 3864344

DRAWN BY: DCM-56

SCALE: 3/4" = 1'-0"

MASTER DRAWING

SHEET NO. 4

FOODSERVICE CONSULTANT:
LANDMARK KITCHEN DESIGN, LLC
ARIZONA • NEW ENGLAND
TEL: (602) 443-5364
info@landmarkfsc.com
www.LandmarkFSC.com

TENANT IMPROVEMENT FOR

Steak 'n Shake — FAMOUS FOR STEAKBURGERS

1966 WEST AVE L
LANCASTER, CA

4-24-18	BUILDING DEPT SUBMITTAL
1	
2	
3	
4	

EXHAUST HOOD SHOP DRAWING

FS-5.4

FAN #3.A1-15D-MPU - SUPPLY FAN
1. SUPPLY UNIT WITH 15" DIRECT DRIVE FAN IN SIZE #1 HOUSING
2. INTAKE HOOD WITH EZ FILTERS
3. DOWN DISCHARGE - AIR FLOW RIGHT -> LEFT
4. 5 TON, DUAL CIRCUIT (2.5/2.5) MODULAR PACKAGED COOLING OPTION FOR SIZE 1 MODULAR PACKAGED UNIT. INCLUDES CONDENSER, DX COIL, FILTER/DRYER KIT, THERMAL EXPANSION VALVE, R410A REFRIGERANT, AND REFRIGERANT PIPING. (1,800 TO 3,000 CFM) NOT BUILT WITH OPPOSITE SIDE CONTROLS OR OPPOSITE AIRFLOW DIRECTION. CONDENSERS REQUIRE SEPARATE 208V, 3 PHASE POWER SUPPLY UNLESS ORDERED WITH SINGLE POINT CONNECTION. COIL = 2EZ0902ME
5. INSULATED BLOWER HOUSING SIZES 1-2 COMMERCIAL MODULAR
6. CONTROL PACKAGE FOR MOD PACKAGE UNIT COOLING ONLY UNIT. INCLUDES AIRFLOW PROVING SWITCH, RTULINK-ACHP BOARD AND TERMINAL BLOCKS.
7. SUPPORT SHELL FOR SIZE 1 MODULAR PACKAGE UNIT. INCLUDES CONTROL VESTIBULE. INCLUDES CONDENSER SUPPORTS. DOES NOT INCLUDE RETURN AIR OR INLET AIR DAMPER.
8. MOTORIZED BACK DRAFT DAMPER 16" X 18" FOR SIZE 1 UNTEMPERED UNITS W/EXTENDED SHAFT, STANDARD GALVANIZED CONSTRUCTION, 3/4" REAR FLANGE, LOW LEAKAGE, TFB120S ACTUATOR INCLUDED
9. CONDENSER SLED OPTION FOR SIZE 1 DOUBLE CONDENSER MPUS. CONDENSERS MOUNTED ON OPPOSITE SIDE OF UNIT CONTROLS. OPTION REDUCES HEIGHT OF UNIT. SKID WIDTH IS 79".
10. LOCKING CAPS FOR DOUBLE CONDENSER UNITS. CONSISTS OF 4 LOCKING CAPS, PART# NCP-4, AND 1 KEY, PART# NC-KEY.
11. SEPARATE 120VAC WIRING PACKAGE FOR MAKE-UP AIR UNITS. OPTION MUST BE SELECTED WHEN MOUNTING VFD IN PREWIRE PANEL OR WITH DCV PACKAGE. PROVIDES SEPARATE 120VAC INPUT TO SUPPLY FAN. THIS 120V SIGNAL MUST BE RUN BY ELECTRICIAN FROM DCV TO MUA SWITCH.

*NOTE: SUPPLY DUCT MUST BE INSTALLED TO MEET SMACNA STANDARDS. A MINIMUM STRAIGHT DUCT LENGTH MUST BE MAINTAINED DOWNSTREAM OF UNIT DISCHARGE AS OUTLINED IN AMCA PUBLICATION 201. DO NOT RELY ON UNIT TO SUPPORT DUCT IN ANY WAY. FAILURE TO PROPERLY SIZE DUCTWORK MAY CAUSE SYSTEM EFFECTS AND REDUCE PERFORMANCE OF THE EQUIPMENT.
SUGGESTED STRAIGHT DUCT SIZE IS 14" x 14"

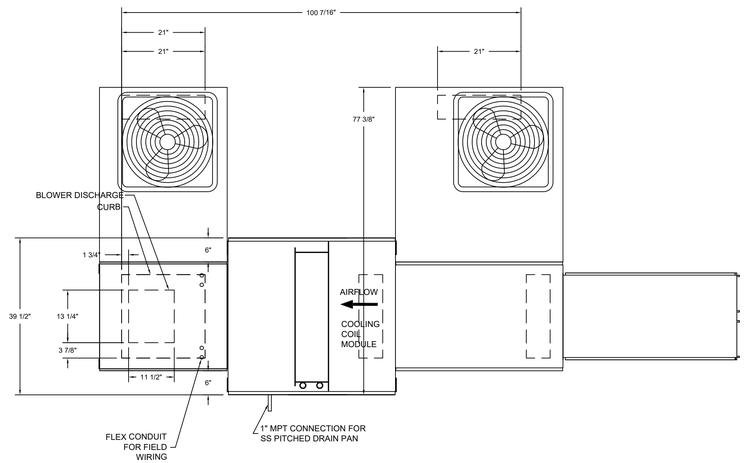

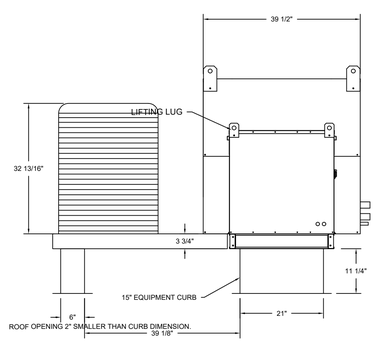

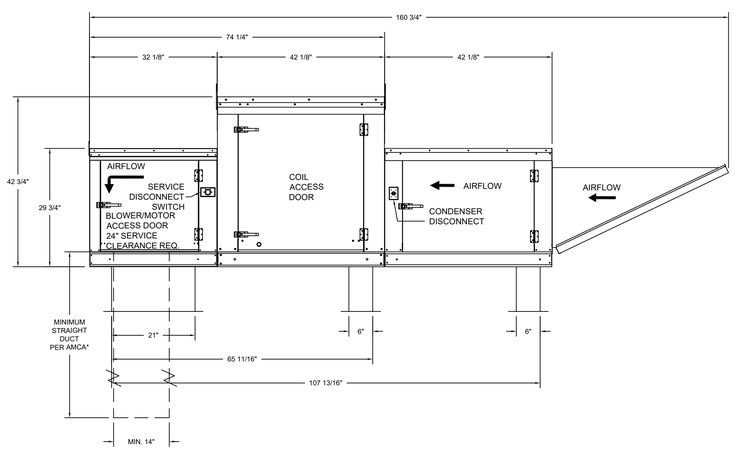

PITCHED CURBS ARE AVAILABLE FOR PITCHED ROOFS.

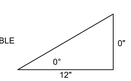

SPECIFY PITCH:
EXAMPLE: 7/12 PITCH = 30° SLOPE

Typical Drain Trap Install

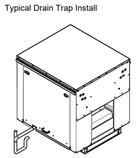

Recommended Cooling Coil Drain Trap Configuration

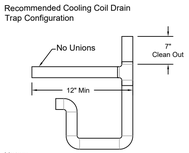

Notes:
1) 1" diameter PVC Pipe only
2) Use only low profile couplings
3) Add clean out as shown

REVISIONS

	DESCRIPTION	DATE:
1		
2		
3		
4		

CAPTIVEAIRE
www.captiveaire.com
Indiana Office
20 E. Airport Rd. Ste. 100, Brownsburg, IN, 46112 PHONE: (317) 852-3770 FAX: (919) 227-5929 EMAIL: reg56@captiveaire.com

SNS LANCASTER, CA
LANCASTER, CA, 93536

DATE: 6/11/2019
DWG.#: 3864344
DRAWN BY: DCM-56
SCALE: 3/4" = 1'-0"
MASTER DRAWING
SHEET NO. 5

FOODSERVICE CONSULTANT:
LANDMARK KITCHEN DESIGN, LLC
ARIZONA • NEW ENGLAND
TEL: (602) 443-5364
info@landmarkfsc.com
www.landmarkfsc.com

TENANT IMPROVEMENT FOR
Steak 'n Shake
1966 WEST AVE L
LANCASTER, CA

9-24-18	BUILDING DEPT SUBMITTAL
1	
2	
3	
4	

EXHAUST HOOD SHOP DRAWING

FS-5.5

Seismic Exhaust Curb

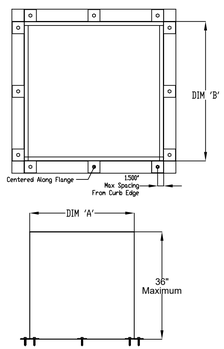

Curbs are built in the following way.

* Metal is .060" Aluminized Sheet Metal
* All seams are welded with MIG using ER70S-6 wire.
* Top Flange is 1.00" wide.
* Bottom flange is 3.00" wide.
* Widths and lengths vary by product installed.
* Max curb pitch is 5" on 12"

Curb Dimensions		
Unit Type	DIM 'A'	DIM 'B'
Exhaust	19.5-42.5"	19.5-42.5"

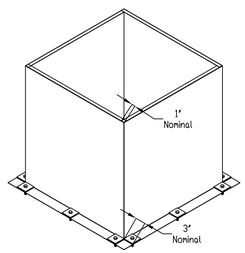

Seismic Supply Curb

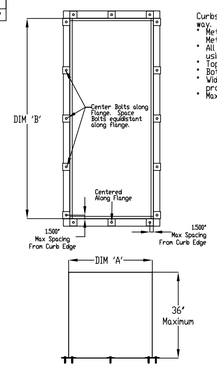

Curbs are built in the following way.

* Metal is .060" Aluminized Sheet Metal
* All seams are welded with MIG using ER70S-6 wire.
* Top Flange is 1.00" wide.
* Bottom flange is 3.00" wide.
* Widths and lengths vary by product installed.
* Max curb pitch is 5" on 12"

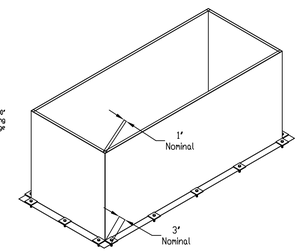

Seismic Support Rails

Curb Dimensions		
Unit Type	DIM 'A'	DIM 'B'
Supply	19.5-52.75"	19.5-52.75"

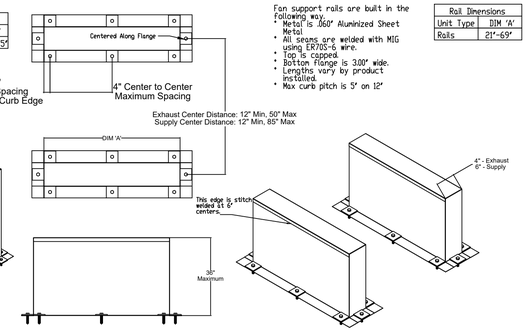

Fan support rails are built in the following way.

* Metal is .060" Aluminized Sheet Metal
* All seams are welded with MIG using ER70S-6 wire.
* Top is capped.
* Bottom flange is 3.00" wide.
* Lengths vary by product installed.
* Max curb pitch is 5" on 12"

Rail Dimensions	
Unit Type	DIM 'A'
Rails	21"-69"

Seismic Hardware

Rooftop Curb Attachment Plate

Steel Support Block, 3" x 3" by .250" Thick steel plate and galvanized for weather resistance.

Part number for the plate is 91133A140 (Macola# A0017326)

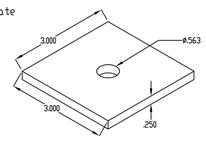

Lag Bolt for Rooftop Curb Attachment

Steel Lag Bolt. .500" Diameter. 1 1/2" of Bolt must be installed into the wooden support structure.

Lag bolt must not be installed in the end grain.

Part Number for the bolt is 91478A722 (Macola# A0017980)

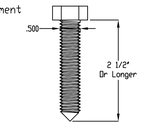

REVISIONS

	DESCRIPTION	DATE:
1		
2		
3		
4		

CAPTIVEAIRE
www.captiveaire.com
Indiana Office
20 E. Airport Rd. Ste. 100, Brownsburg, IN, 46112 PHONE: (317) 852-3770 FAX: (919) 227-5929 EMAIL: reg56@captiveaire.com

SNS LANCASTER, CA
LANCASTER, CA, 93536

DATE: 6/11/2019

DWG.#: 3864344

DRAWN BY: DCM-56

SCALE: 3/4" = 1'-0"

MASTER DRAWING

SHEET NO. 6

FOODSERVICE CONSULTANT:
LANDMARK KITCHEN DESIGN, LLC
ARIZONA • NEW ENGLAND
TEL: (602) 443-0264
info@landmarkfs.com
www.landmarkfs.com

TENANT IMPROVEMENT FOR

FAMOUS FOR Steak 'n Shake STEAKBURGERS

1966 WEST AVE L
LANCASTER, CA

9-24-18	BUILDING DEPT SUBMITTAL
1	
2	
3	
4	

EXHAUST HOOD SHOP DRAWING

FS-5.6

Exhaust Fan Wiring

JOB	3864344 - SNS LANCASTER, CA		
DRAWING NUMBER	EXO3864344-1	SHIP DATE	6/11/2019
MODEL	DU5028FA		

Installed Options

Component Identification Description		Location
Label		
MT-01	Fan Motor	[2]
MT-02	Damper Motor	[2]
SW-01	Main disconnect switch	[2]

MOTOR INFO.
EXHAUST 0.5HP,208/230/1PH,FR,A

ELECTRICAL INFORMATION
MOTOR(ITE) MCA - 5.0A
MOTOR(ITE) MOP - 15A

NOTES
= = = = DENOTES FIELD WIRING
——— DENOTES INTERNAL WIRING

WIRE COLOR

BK - BLACK	YW - YELLOW
BL - BLUE	GR - GREEN
BR - BROWN	GY - GRAY
OR - ORANGE	PR - PURPLE
RD - RED	PK - PINK
WH - WHITE	

Exhaust Fan Wiring

JOB	3864344 - SNS LANCASTER, CA		
DRAWING NUMBER	EXO3864344-2	SHIP DATE	6/11/2019
MODEL	DU1028FA		

Installed Options

Component Identification Description		Location
Label		
MT-01	Fan Motor	[2]
MT-02	Damper Motor	[2]
SW-01	Main disconnect switch	[2]

MOTOR INFO.
EXHAUST 1HP,208/230/1PH,FR,A

ELECTRICAL INFORMATION
MOTOR(ITE) MCA - 8.8A
MOTOR(ITE) MOP - 15A

NOTES
= = = = DENOTES FIELD WIRING
——— DENOTES INTERNAL WIRING

WIRE COLOR

BK - BLACK	YW - YELLOW
BL - BLUE	GR - GREEN
BR - BROWN	GY - GRAY
OR - ORANGE	PR - PURPLE
RD - RED	PK - PINK
WH - WHITE	

AirHandler Wiring

JOB	3864344 - SNS LANCASTER, CA		
DRAWING NUMBER	A3864344-3	SHIP DATE	6/11/2019
MODEL	A1-150-MPU		

ATTENTION ELECTRICIAN!
ONLY FOR FIELD DIRECT CONNECTION
(5 FACTORY SUPPLIED)
CONNECT POWER TO THE DROP

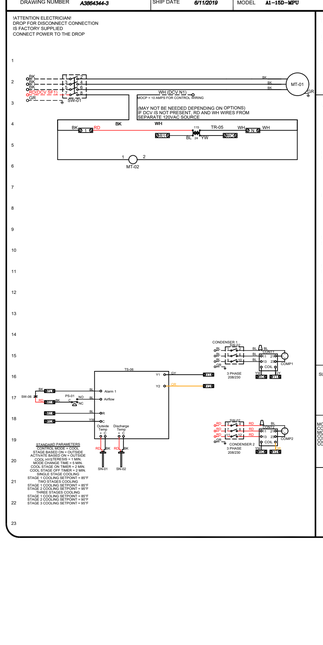

Installed Options
Motorized Back Draft Damper
DCM/VFD Wiring
Condenser Wiring

Component Identification Description		Location
Label		
MT-01	Supply motor	[3]
MT-02	Damper motor	[3]
PS-01	DCP-105-213 AFS	[17]
SN-01	Outside Air Sensor	[20]
SN-02	Discharge Air Sensor	[21]
SW-01	Main disconnect switch	[2]
SW-02	40 Amp Relay Disconnect	[16] [18]
SW-06	Overflow Switch	[16-17]
TR-05	Cooling Transformer(40va)	[4]
TS-06	RTU/Air-ACHP	[16]

MOTOR INFO.
SUPPLY 2HP,208/230/1PH,TFCA

ELECTRICAL INFORMATION
MOTOR(ITE) CURRENT MCA - 7.5A
MOTOR(ITE) CURRENT MOP - 20A
CONDENSER(ITE) MCA - 11.0A CONDENSER(ITE) MOP - 20A
CONDENSER(ITE) MCA - 11.0A CONDENSER(ITE) MOP - 20A
FINAL MCA - 19.5A FINAL MOP - 30A

NOTES
= = = = DENOTES FIELD WIRING
——— DENOTES INTERNAL WIRING

WIRE COLOR

BK - BLACK	YW - YELLOW
BL - BLUE	GR - GREEN
BR - BROWN	GY - GRAY
OR - ORANGE	PR - PURPLE
RD - RED	PK - PINK
WH - WHITE	

REVISIONS

DESCRIPTION	DATE:

CAPTIVEAIRE
www.captiveaire.com
Indiana Office
20 E. Airport Rd. Ste. 100, Brownsburg, IN. 46112 PHONE: (317) 852-3770 FAX: (919) 227-5929 EMAIL: reg56@captiveaire.com

SNS LANCASTER, CA
LANCASTER, CA, 93536

DATE: 6/11/2019
DWG.#: 3864344
DRAWN BY: DCM-56
SCALE: 3/4" = 1'-0"
MASTER DRAWING
SHEET NO. 7

FOODSERVICE CONSULTANT:
LANDMARK KITCHEN DESIGN, LLC
ARIZONA • NEW ENGLAND
TEL: (602) 443-5344
info@landmarkfsc.com
www.landmarkfsc.com

TENANT IMPROVEMENT FOR
Steak 'n Shake
1966 WEST AVE L
LANCASTER, CA

9-24-18	BUILDING DEPT SUBMITTAL
1	
2	
3	
4	

EXHAUST HOOD SHOP DRAWING

FS-5.7

ELECTRICAL PACKAGE – Job#3864344

NO.	TAG	PACKAGE #	LOCATION	SWITCHES		OPTION	FANS CONTROLLED				
				LOCATION	QUANTITY		TYPE	ϕ	H.P.	VOLT	FLA
1		DCV-2111	Utility Cabinet Right	04 - Utility Cabinet Right	1 Light	Smart Controls DCV	Exhaust	3	0.500	208	2.0
				Hood # 1	1 Fan		Exhaust	3	1.000	208	3.8
							Supply	3	2.000	208	6.1

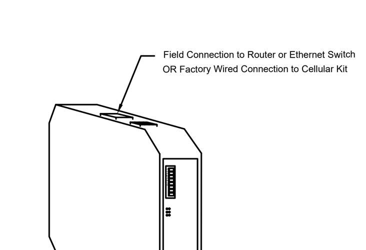

CASlink Monitor and Control

- Hood control panel to support communications to cloud-based Building Management System.
- Hood Control Panel to allow cloud-based Building Management System to monitor real time parameters outlined as MONITOR in the points list.
- Hood Control Panel to allow cloud-based Building Management System to control parameters outlined as CONTROL in the points list.
- Hood control panel to allow remote changes to system setting such as: VFD Frequencies, ECM speeds, temperature set points, fan and wash schedules, etc.

MONITORING AND CONTROL POINTS LIST

DCV Packages	Function
Room Temperature	MONITOR
Duct Temperature(s)	MONITOR
MUA Discharge Temperature	MONITOR
Kitchen RTU Discharge Temperature	MONITOR
Fan Speed	MONITOR
Fan Amperage	MONITOR
Fan Power	MONITOR
VFD Faults	MONITOR
Controller Faults	MONITOR
Fan Faults	MONITOR
Fan Status	MONITOR
PCU Faults	MONITOR
PCU Filter Clog Percentages	MONITOR
Fire Condition	MONITOR
CORE Fire System	MONITOR
Building Pressures	MONITOR
Prep Time Button	MONITOR & CONTROL
Fans Button	MONITOR & CONTROL
Lights Button	MONITOR & CONTROL
Wash Button	MONITOR & CONTROL

SC Packages	Function
Room Temperature(s)	MONITOR
Duct Temperature(s)	MONITOR
MUA Discharge Temperature	MONITOR
Kitchen RTU Discharge Temperature	MONITOR
Controller Faults	MONITOR
Fan Faults	MONITOR
Fan Status	MONITOR
PCU Faults	MONITOR
PCU Filter Clog Percentages	MONITOR
Fire Condition	MONITOR
CORE Fire System	MONITOR
Building Pressures	MONITOR
Fans Button(s)	MONITOR & CONTROL
Lights Button(s)	MONITOR & CONTROL
Wash Button	MONITOR & CONTROL

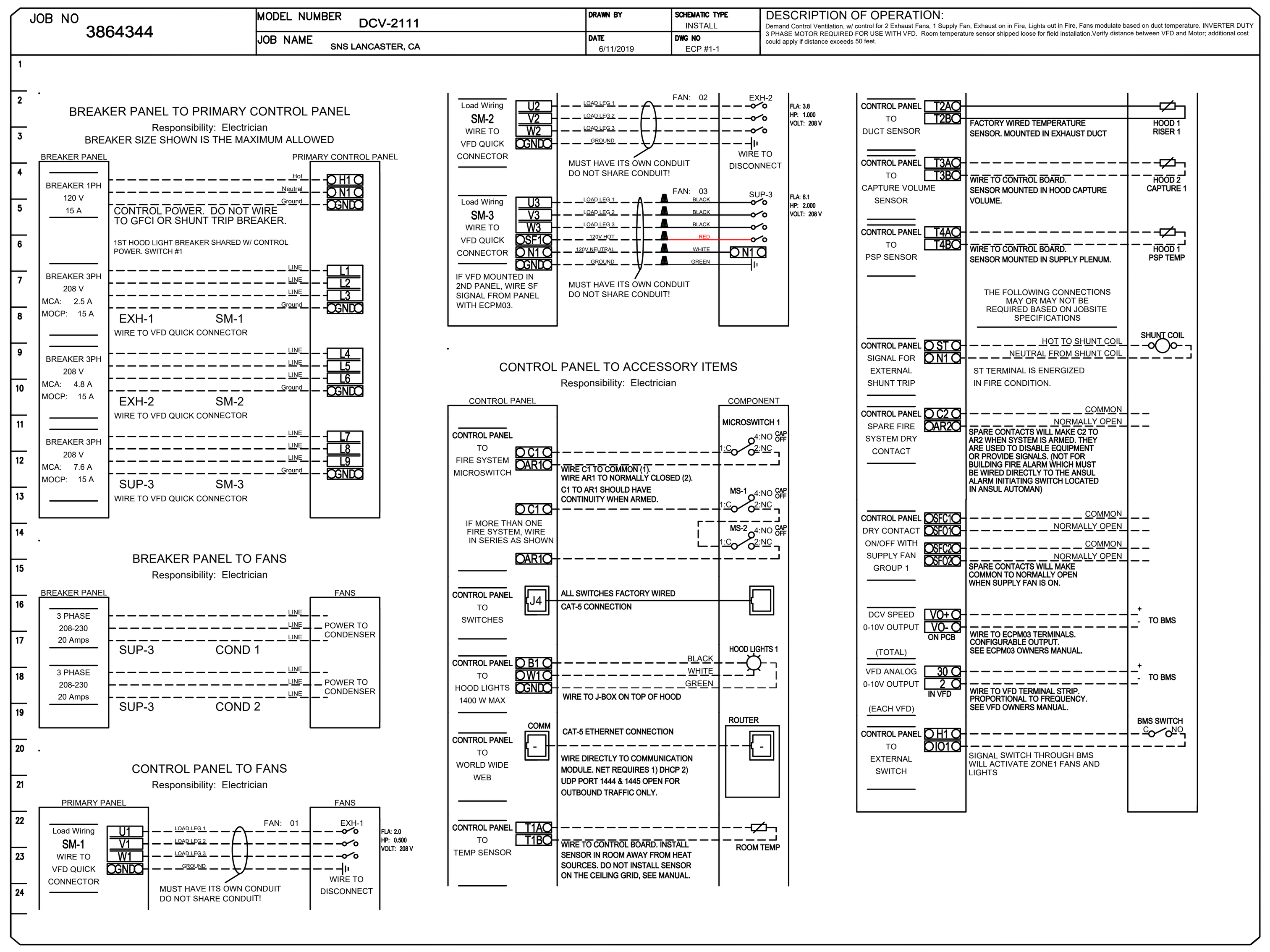

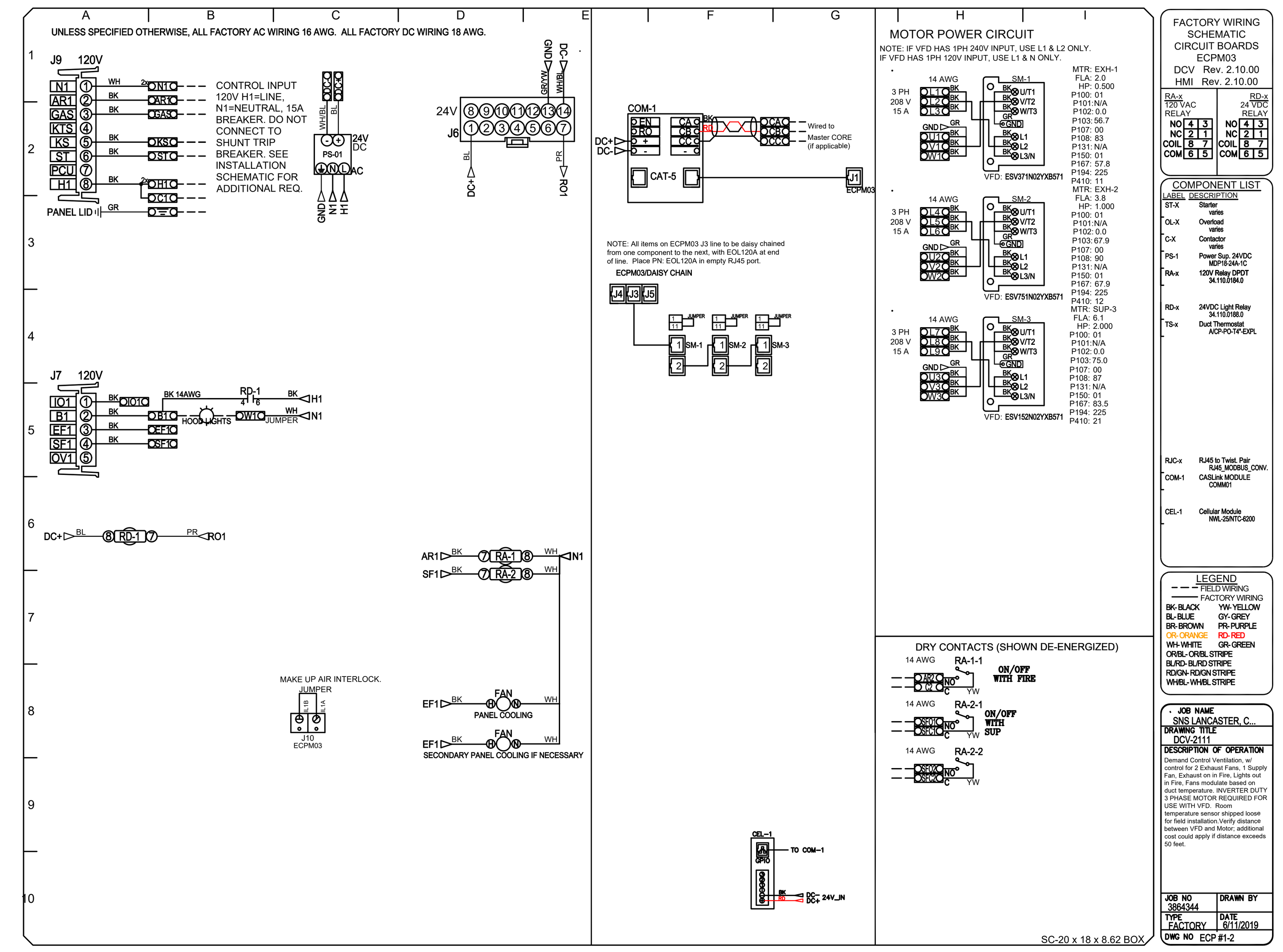

Demand Control Ventilation Hood Control Panel Specifications:

- Controls shall be listed by ETL (UL 508A) and shall comply with demand ventilation system turndown requirements outlined in IECC 403.2.8 (2015).
- The control enclosure shall be NEMA 1 rated and listed for installation inside of the exhaust hood utility cabinet. The control enclosure may be constructed of stainless steel or painted steel.
- Temperature probe(s) located in the exhaust duct riser(s) shall be constructed of stainless steel.
- A digital controller shall be provided to activate the hood exhaust fans dynamically based on a fixed differential between the ambient and duct temperatures sensors. This function shall meet the requirements of IMC 507.1.1.
- A digital controller shall provide adjustable hysteresis settings to prevent cycling of the fans after the cooking appliances have been turned off and/or the heat in the exhaust system is reduced.
- A digital controller shall provide an adjustable minimum fan run-time setting to prevent fan cycling.
- Variable Frequency Drives (VFDs) shall be provided for fans as required. The digital controller shall modulate the VFDs between a minimum setpoint and a maximum setpoint on demand. The duct temperature sensor input(s) to the digital controller shall be used to calculate the speed reference signal.
- The VFD speed range of operation shall be from 0% to 100% for the system, with the actual minimum speed set as required to meet minimum ventilation requirements.
- An internal algorithm to the digital controller shall modulate supply fan VFD speed proportional to all exhaust fans that are located in the same fan group as the supply fan.
- The system shall operate in PREP MODE during light cooking load or COOL DOWN MODE when sufficient heat remains underneath the hood system after cooking operations have completed. Operation during either of these periods will disable the supply fans and provide an exhaust fan speed that is equal to the minimum ventilation requirement.
- A digital controller shall disable the supply fan(s), activate the exhaust fan(s), activate the appliance shunt trip, and disable an electric gas valve automatically when fire condition is detected on a covered hood.
- A digital controller shall allow for external BMS fan control via Dry Contact (external control shall not override fan operation logic as required by code).
- An LCD interface shall be provided with the following features:
  a. On/Off push button fan & light switch activation
  b. Integrated gas valve reset for electronic gas valves (no reset relay required)
  c. VFD Fault display with audible & visual alarm notification
  d. Duct temperature sensor failure detection with audible & visual alarm notification
  e. Mis-wired duct temperature sensor detection with audible & visual alarm notification
  f. A single low voltage Cat-5 RJ45 wiring connection
  g. An energy savings indicator that utilizes measured kWh from the VFDs

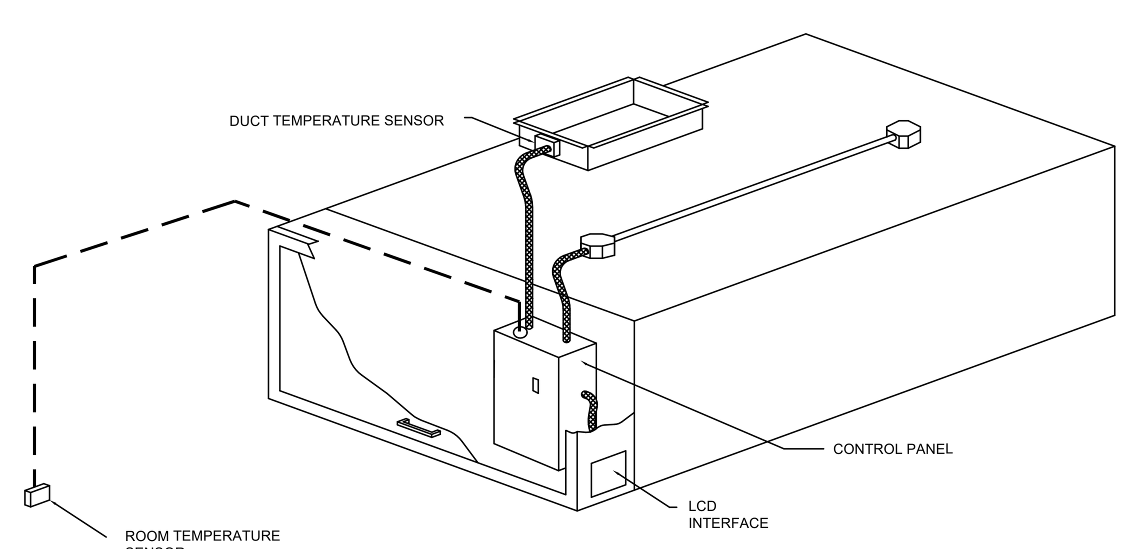

TYPICAL HOOD CONTROL PANEL INSTALLATION

Sequence of Operations:

The hood control panel is capable of operating in one or more of the following states at any given time:

- Automatic: The system operates based on the differential between room temperature and the temperature at the hood cavity or exhaust duct collar. Fans activate at a configurable temperature differential threshold. Depending on the job configuration each fan zone can be configured as static or dynamic. These terms refer to whether a variable motor (such as EC Motors or VFD driven motors) modulate with temperature. If the panel is equipped with variable speed fans and the zone is defined as "dynamic", these will modulate within a user-defined range based on the temperature differential. Panels equipped with variable speed fans and a fan zone defined as "static", fans will run at a set speed calculated for the drive. Demand control ventilation systems are capable of modulating exhaust and make up air fan speeds per the requirements outlined in IECC 403.2.8.
- Manual: The system operates based on human input from an HMI.
- Schedule: A weekly schedule can be set to run fans for a specified period throughout the day. There are three occupied times per day to allow for the user to set up a time that is suitable to their needs. Any time that is within the defined occupied time, the system will run at modulation mode and follow the fan procedure algorithm based on temperature during this time. During unoccupied time, the system will have an extra offset to prevent unintended activation of the system during a time where the system is not being occupied.
- Other: The system operates based on the input from an external source (DDC, BMS or hard-wired interlock)

REVISIONS

DESCRIPTION	DATE:

CAPTIVEAIRE
www.captiveaire.com
Indiana Office
20 E. Airport Rd. Ste. 100, Brownsburg, IN, 46112 PHONE: (317) 852-3770 FAX: (919) 227-5929 EMAIL: reg56@captiveaire.com

SNS LANCASTER, CA
LANCASTER, CA, 93536

DATE: 6/11/2019

DWG.#: 3864344

DRAWN BY: DCM-56

SCALE: 3/4" = 1'–0"

MASTER DRAWING

SHEET NO. 8

FOODSERVICE CONSULTANT:
LANDMARK KITCHEN DESIGN, LLC
ARIZONA • NEW ENGLAND
TEL: (602) 443-0344
info@landmarkphx.com
www.landmarkphx.com

TENANT IMPROVEMENT FOR

Steak 'n Shake — FAMOUS FOR STEAKBURGERS

1966 WEST AVE L
LANCASTER, CA

9-24-18	BUILDING DEPT SUBMITTAL
1	
2	
3	
4	

EXHAUST HOOD SHOP DRAWING

FS-5.8

DuctWork #1 Parts – Job#3864344

Tag	Part #	CFM	S.P.	Weight	Velocity	QTY	Description
P1	DW1445ASY	1812	-0.0473	7.22	1695.02	1	Single Wall Duct 45 Degree Elbow, 14" Duct, Assembly.
P2	DW1445ASY	1812	-0.0675	7.22	1695.02	1	Single Wall Duct 45 Degree Elbow, 14" Duct, Assembly.
P3	DW1447LT	1812	-0.0199	21.79	1695.02	1	Single Wall Duct 14" diameter, 47" long, flange at both ends. Stainless Steel.
P4 Assembled w/P5	DW1448AJDKIT	1812	-0.0131	26.62	1695.02	1	Single Wall Duct Adjustable, 14" diameter, 47.5" long, flange at one end With a 14" Adjustable Collar - Stainless Steel.
P5 Assembled w/P4	DW2614TP	1812	0	12.53	1695.02	1	Duct to Curb Transition, 26-1/2" Curb to 14" Duct, 16 GA Aluminized. Used on BDU18.
System at P5		1812	-0.9323				
	3M-2000PLUS			0.80		1	Duct - 3M Fire Barrier 2000 Plus Silicone - Used as sealant to Seal Duct Joints.
	735602000			52.00		3	Duct - Duct insulation for zero clearance to combustibles - 300" x 24" x 1-1/2" Roll. Unifrax FyreWrap Elite 1.5.
	BANDING.5			5.00		1	Duct - Fire Barrier Wrap Stainless Steel Banding .5" Width - 200 FT Per Roll.
	DW14CLASY			1.37		4	Duct "V" Clamp With new design 14 Ga Brackets, 14" Duct, Assembly.
	SEAL.50-50			0.50		1	Duct - Fire Barrier Wrap Stainless Steel Banding Seal .5" Width. Quantity of 50.
	TAPEALUM			0.25		1	Duct - Fire Barrier Wrap Aluminum Foil Tape - 3" x 150' Roll.
Total Weight				243.41			

SINGLE WALL FACTORY BUILT DUCTWORK

- ALL DUCTWORK IS REQUIRED TO BE INSTALLED WITH THE MAXIMUM SUPPORT SPACING LISTED BELOW.
- FOR A COMPLETE LIST OF APPROVED SUPPORT METHODS, SEE THE INSTALLATION AND OPERATION MANUAL.
- DUCTWORK SHALL SLOPE NOT LESS THAN 1/16" PER LINEAR FOOT TOWARDS THE HOOD OR AN APPROVED GREASE COLLECTION RESERVOIR.
- WHERE HORIZONTAL DUCTS EXCEED 75 FEET IN LENGTH, THE SLOPE SHALL NOT BE LESS THAN 3/16" PER LINEAR FOOT.

DUCT DIAMETER	HORIZONTAL SUPPORT (ft)	VERTICAL WALL SUPPORT (ft)	VERTICAL CURB SUPPORT (ft)
8"	10'	10'	24'
10"	10'	10'	24'
12"	10'	10'	24'
14"	10'	10'	24'
16"	10'	10'	24'
18"	10'	10'	24'
20"	10'	10'	24'
22"	10'	10'	24'
24"	10'	10'	24'

DuctWork #1 Front View

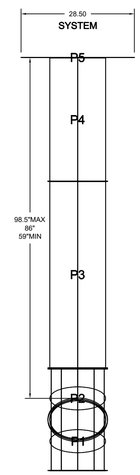

DuctWork #1 Top View

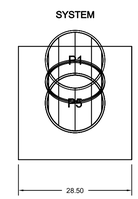

DuctWork #1 Side View

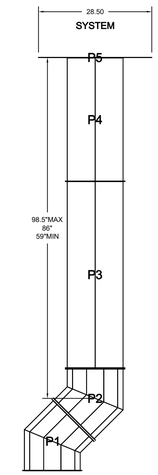

DuctWork #1 SE View

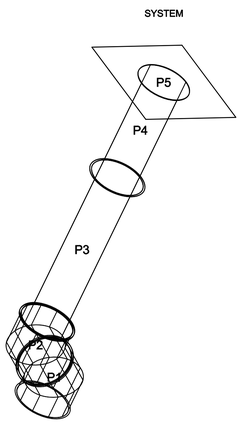

REVISIONS

DESCRIPTION	DATE:

CAPTIVEAIRE

www.captiveaire.com

Indiana Office

20 E. Airport Rd. Ste. 100, Brownsburg, IN. 46112 PHONE: (317) 852-3770 FAX: (919) 227-5929 EMAIL: reg56@captiveaire.com

SNS LANCASTER, CA

LANCASTER, CA, 93536

DATE: 6/11/2019

DWG.#: 3864344

DRAWN BY: DCM-56

SCALE: 3/4" = 1'-0"

MASTER DRAWING

SHEET NO. 9

FOODSERVICE CONSULTANT:

LANDMARK KITCHEN DESIGN, LLC

ARIZONA • NEW ENGLAND
TEL: (602) 443-5364
info@landmarkfs.com
www.landmarkfs.com

TENANT IMPROVEMENT FOR

FAMOUS FOR Steak 'n Shake STEAKBURGERS

1966 WEST AVE L
LANCASTER, CA

9-24-18	BUILDING DEPT SUBMITTAL
1	
2	
3	
4	

EXHAUST HOOD SHOP DRAWING

FS-5.9

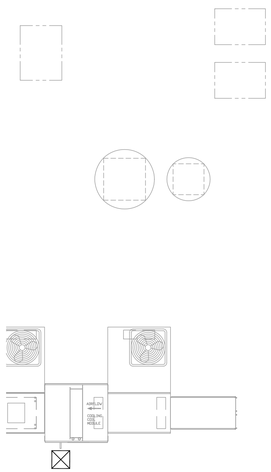

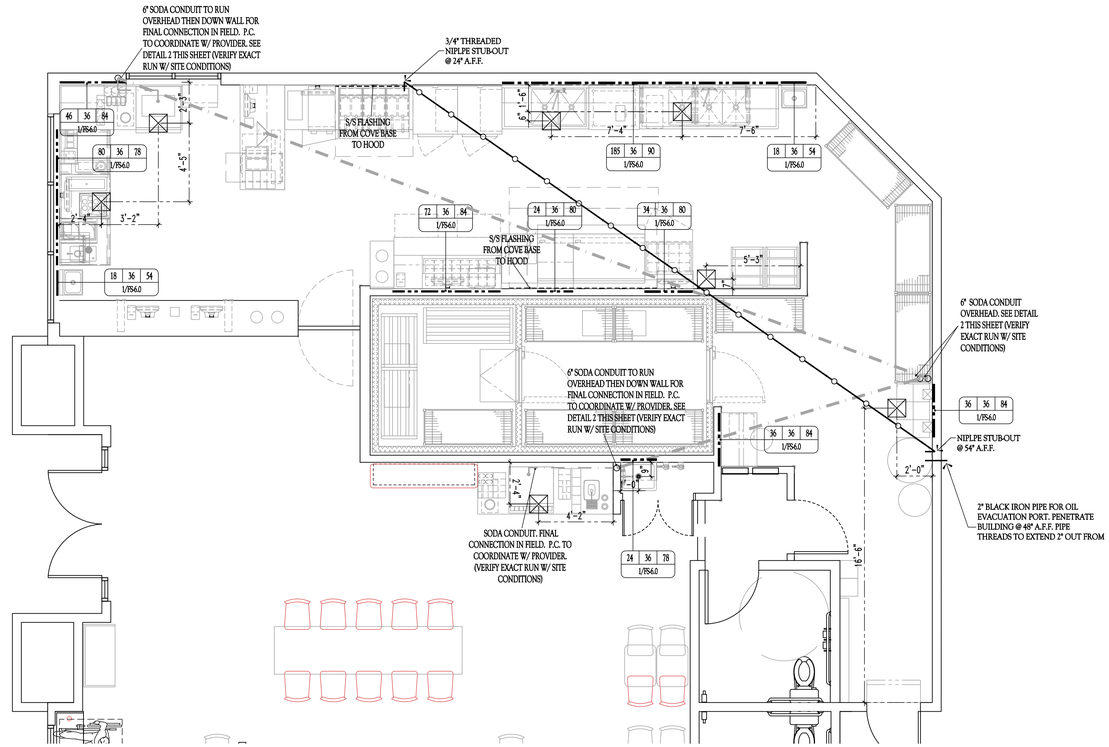

FLOOR PLAN

SCALE: 1/4" = 1'-0"

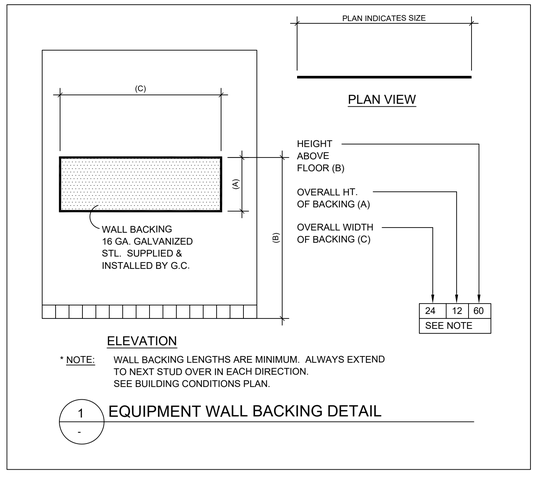

* NOTE: WALL BACKING LENGTHS ARE MINIMUM. ALWAYS EXTEND TO NEXT STUD OVER IN EACH DIRECTION. SEE BUILDING CONDITIONS PLAN.

1 / - EQUIPMENT WALL BACKING DETAIL

SYMBOLS

- SODA LINE CONDUIT (BY GENERAL CONTRACTOR)
- WALL BACKING FOR EQUIPMENT ABOVE 36" (BY GENERAL CONTRACTOR)
- S/S WALL FLASHING (BY K.E.C.)

NOTE:

1. SODA CONDUIT LINES ARE FOR SCHEMATIC PURPOSES ONLY.
2. G.C. TO COORDINATE CONDUIT LINE RUNS WITH ARCHITECTURAL & STRUCTURAL PLANS.

FOODSERVICE CONSULTANT:

LANDMARK KITCHEN DESIGN, LLC

ARIZONA • NEW ENGLAND
TEL: (602) 443-5364
info@landmarkfsc.com
www.landmarkfsc.com

TENANT IMPROVEMENT FOR

FAMOUS FOR Steak 'n Shake STEAKBURGERS

1966 WEST AVE L
LANCASTER, CA

4-24-18	BUILDING DEPT SUBMITTAL
1	
2	
3	
4	

SPECIAL CONDITIONS PLAN

FS-6.0

LANDMARK-BOELTER (Chains)

Quotation

THERMALRITE by EVERIDGE

Quote #: 291032
Quote Date: 06/03/2019
Revision: 06/03/2019(#0)

15600 37th Ave N, Suite 100, Plymouth, MN 55446
Phone: (763) 541.1410 or 1.800.523.7337 - Fax: (763) 541.1563
Internet: www.thermalrite.com

To:
LANDMARK-BOELTER (Chains)
2531 Marshall Ave NE
Minneapolis, MN 55418
Phone: 612.673.9309 Ext 112
Fax: 612.673.9389

From:
Christina Davis
Phone: 316.218.4166
Fax: 316.733.2434
Email: christina.davis@thermalrite.com

Ship To:
Steak n Shake

LANCASTER, CA 93534

Details:
Plant Code: R
Sales Rep: Thermalrite House

Quantity	Description	Price
1	Cooler/ Freezer(19' 0" x 8' 8") - indoor UL Listed Class 1 Panel with NSF listed construction 1) 8' 4" x 8' 8" x 8' 4" foam rail walk-in Holding freezer with floor Refrigeration units: MOZ022L63CFLT w/(1) ECM065BEQRC6E coil -10°F R448/R449 208-230/3/60 2) 10' 8" x 8' 8" x 8' 4" foam rail walk-in Holding cooler without floor Refrigeration units: MOH010X63CFM w/(1) ACM076AEQRC6E coil 35°F R448/R449 208-230/3/60	
	Total	
1	Cooler/ Freezer(19' 0" x 8' 8") - indoor UL Listed Class 1 Panel with NSF listed construction Add for Seismic Calcs	
	Total Including Adds/Deducts	
	Freight Not Included **Taxes Not Included**	

Quoted Price is valid for 30 days

Please consult with your local authorities for all code requirements. Customer is responsible for verifying code requirements for this project for the area.

Please sign below to accept this as an order and request an on-site date:

Accepted By: ______________________ Date: ________________

PO#: ____________________________ Desired On-site Date:_________

Quotation

THERMALRITE by EVERIDGE

Quote #: 291032
Quote Date: 06/03/2019
Revision: 06/03/2019(#0)

Box description: Cooler/ Freezer

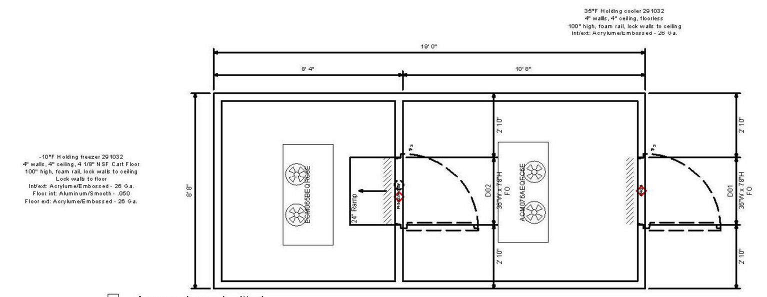

☐ Approved as submitted
☐ NOT APPROVED – Revise and resubmit for approval

Before signing this document, verify that the content you are signing is correct.

X
Accepted By: Date:

Quotation

THERMALRITE by EVERIDGE

Quote #: 291032
Quote Date: 06/03/2019
Revision: 06/03/2019(#0)

Box description: Cooler/ Freezer -- Right elevation

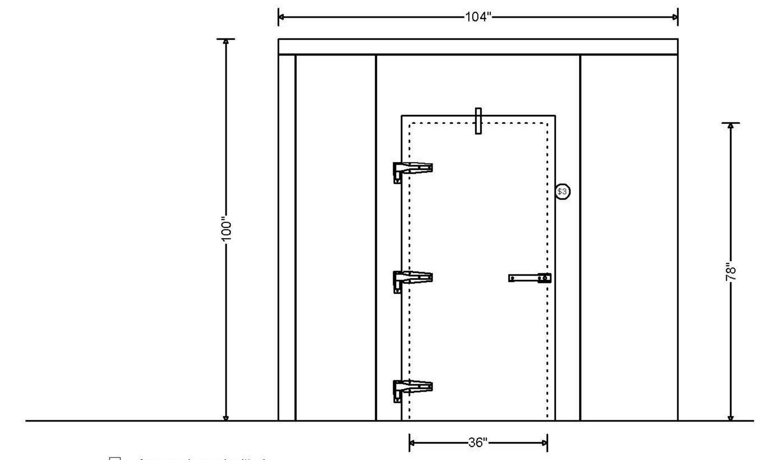

☐ Approved as submitted
☐ NOT APPROVED – Revise and resubmit for approval

Before signing this document, verify that the content you are signing is correct.

X
Accepted By: Date:

Quotation

THERMALRITE by EVERIDGE

Quote #: 291032
Quote Date: 06/03/2019
Revision: 06/03/2019(#0)

Box description: Cooler/ Freezer

Dimensions:
External (O.D.): 19' 0" x 8' 8" x 8' 4" - w x d x h
Internal (I.D.): 18' 4" x 8' 0" x 8' 0" - w x d x h
Volume: 1173 ft³ / 291032

Finishes
Walls: Acrylume/Embossed - 26 Ga. - interior & exterior
Floors: Aluminum/Smooth - .050 - interior
Acrylume/Embossed - 26 Ga. - exterior
Ceilings: Acrylume/Embossed - 26 Ga. - interior & exterior

Panel Thickness
Walls: 4" UL Listed Class 1 Foam
Floors: 4.125" UL Listed Class 1 Foam cart floor, designed to support 1000 lb/ft² - 175 lb cart load and 3,735 lb/ft² uniform load (single layer of 5/8" underlayment in floor)
Ceilings: 4" UL Listed Class 1 Foam

Qty	Description	Qty	Description
	Door D01		
1	Finished opening 36" x 78" hinged flush cooler door	1	Door- Flush Mount
1	Door Closer-Kason 1094 SureClose™ Hydraulic (Concealed mounting)	1	Temp - 1967-2 Light Switch / LED Display (TR) Pre-wired
1	Hinge (Additional)	1	Gasket- Magnetic
	Door D02		
1	Finished opening 36" x 78" hinged flush freezer door	1	Ramp/24" Deep, Interior
1	Door- Flush Mount	1	Heated Jamb (4 Sided) W/ Threshold
1	Door Closer-Kason 1094 SureClose™ Hydraulic (Concealed mounting)	1	Temp - 1967-2 Light Switch / LED Display (TR) Pre-wired
1	Hinge (Additional)	1	Gasket- Magnetic
	Accessories		
9	Caulk - Silicone Grey (Tubes)	27	Screed -Non-Lockable - Vinyl (U-Shaped)
2	Light- (120v) LED 30 watt Vapor-Proof Fixture (4') - (bulbs included in price)	26	Caulk - Butyl (Tubes)
32	Lock Wall Panels to Ceiling Panels (Factory Ceiling Caps - Standard)	15	Lock Wall Panels to Floor Panels
1	Vent - 115v Narrow Jamb Heated Pressure Relief Port (Kason 1825)	1	MOZ022L63CFLT with Liquid line, Filter, Drier, Sight glass installed w/(1) ECM065BEQRC6E coil -10°F R448/R449 208-230/3/60 - FOB factory
1	MOZ022L63CFLT Warranty (Compressor-motor warranty extended to 5-years, part only, no labor) - FOB factory	2	1 Year Refrigeration Service Agreement - FOB factory
1	Strip Curtain - FOB factory	1	MOH010X63CFM with Liquid line, Filter, Drier, Sight glass installed w/(1) ACM076AEQRC6E coil 35°F R448/R449 208-230/3/60 - FOB factory
1	MOH010X63CFM Warranty (Compressor-motor warranty extended to 5-years, part only, no labor) - FOB factory	1	Strip Curtain 36x78 - FOB factory

Quotation

THERMALRITE by EVERIDGE

Quote #: 291032
Quote Date: 06/03/2019
Revision: 06/03/2019(#0)

Refrigeration

Condensing Unit for Holding cooler
- Manufacturer: Heatcraft
- Description: Med Temp Air Cooled Hermetic Condensing Unit with microchannel condenser, Liquid Line Filter/Drier and Sight Glass.
- Model: MOH010X63CFM
- Horsepower: 1hp
- Extras: Liquid line, Filter, Drier, Sight glass installed
- Electrical: 208-230/3/60, RLA 4.2, MOPD 15, MCA 15
- Conditions: BTUH: 8700 Room Temp: 35°F Ambient: 95°F
- Warranty: Compressor-motor warranty extended to 5-years, parts only, no labor

1 x Evaporator (Unit cooler)
- Manufacturer: Heatcraft
- Description: Air defrost Center mount coil (unit cooler) with EC fan motors, Electric Expansion Valve and Cold Storage Solution Controller. coil
- Model: ACM076AEQRC6E
- Extras: None
- Electrical: 115/1/60, Fan amps 1.8, Defrost amps N/A

Condensing Unit for Holding freezer
- Manufacturer: Heatcraft
- Description: Low Temp Air Cooled Scroll Condensing Unit with microchannel condenser, Liquid Line Filter/Drier and Sight Glass.
- Model: MOZ022L63CFLT
- Horsepower: 2hp
- Extras: Liquid line, Filter, Drier, Sight glass installed
- Electrical: 208-230/3/60, RLA 8.3, MOPD 15, MCA 15
- Conditions: BTUH: 6450 Room Temp: -10°F Ambient: 95°F
- Warranty: Compressor-motor warranty extended to 5-years, parts only, no labor

1 x Evaporator (Unit cooler)
- Manufacturer: Heatcraft
- Description: Electric defrost Center mount coil (unit cooler) with EC fan motors, Electric Expansion Valve and Cold Storage Solution Controller. coil
- Model: ECM065BEQRC6E
- Extras: None
- Electrical: 208-230/1/60, Fan amps 1, Defrost amps 8.7

Disclosure:

- All quotations and orders shall be subject to thermalrite, division of Everidge, Inc. standard terms and conditions notwithstanding any additional or contrary terms and conditions of Buyer. Such additional or contrary terms shall not bind Everidge unless accepted in writing even though such terms do not materially alter the terms hereof. No oral statements, warranties, stipulations, representations or terms shall have binding effect or be any part of the contract whatsoever. All orders must be in writing and will be binding when our order acknowledgement is mailed, faxed or emailed. If customer does not have a copy of these terms and conditions, please contact the customer service department.
- Price quotations are valid for 30 days from quote date shown on printout.
- Terms: subject to credit approval.
- Quoted price DOES NOT include any applicable sales tax. Ask your customer service representative for a list of states in which sales tax is collected. If item is resale, a copy of your resale exemption certificate must be on file with thermalrite prior to shipping, otherwise sales tax may be charged.
- All shipments to IA are subject to use tax per the Iowa code. Resale certificates do not apply.
- Lead Times vary depending on the production schedule. Please consult you customer service representative for an actual lead-time.
- Structural or seismic calculations and materials are not included unless shown on quote or requested.

We hope this quotation meets with your approval and if we can be of further assistance please do not hesitate to contact your customer service representative. Thank you for the opportunity to submit this quotation.

Please include the quotation reference number with all enquires pertaining to this document.

Quotation

THERMALRITE by EVERIDGE

Quote #: 291032
Quote Date: 06/03/2019
Revision: 06/03/2019(#0)

Sincerely,
Customer Service Department

Quotation

THERMALRITE by EVERIDGE

Quote #: 291032
Quote Date: 06/03/2019
Revision: 06/03/2019(#0)

EVERIDGE, Terms & Conditions of Sale

1. Orders. Orders must be in writing, are binding only upon acceptance by Seller and must specify type and quantity of Product, specifications and, if Seller is to provide installation services, installation plans. Quotations are valid for 30 days.
2. Payments. Due in full 30 days after shipment. Past due invoices subject to interest at 1½% per month (18% per year). Seller may partial bill if Buyer delays shipment more than one week after product is manufactured, installation is not complete within one week after shipment or delivery is scheduled at weekly or greater interval. Seller may file material and mechanics liens and Buyer shall pay all costs and attorneys' fees incurred if Seller initiates collection or legal proceedings. Terms of sale are subject to credit approval.
3. Delivery; Risk of Loss. Delivery dates are approximate and failure to meet estimated delivery dates is not grounds for cancellation. Transportations costs will be invoiced to Buyer at cost plus handling. Risk of loss or damage from Seller's factory or at an installation site is Buyer's risk, whether or not Seller performs installation. Buyer shall verify condition, quantity and quality of Product, note on the freight bill any damage or shortage and immediately file a claim with carrier.
4. Changes. Change orders must be authorized by Seller in writing. Seller shall have the right to adjust price and completion date in the event of latent, concealed or unknown conditions which differ materially from description of installation. Cancelled orders are subject, in Seller's sole discretion, to total invoice amount less freight, taxes, etc. or a restocking fee based on complexity and completeness of the order. Products cannot be returned without Seller's written permission. If permitted, Buyer shall pay all transportation charges.
5. Installation. Buyer shall provide all information, drawings, records, utility locations, documentation and specifications concerning Product and installation if installation is requested. Buyer is responsible for utilities, access to work, parking and storage areas and sanitation facilities, shall comply with all laws and regulations, shall cooperate with Seller on job site safety matters, shall coordinate installation performed by Buyer or its contractors so as not to interfere with or delay Seller's performance. Buyer shall reimburse Seller for any additional cost caused by Buyer or its contractors or changes to Seller's installation. Buyer shall maintain property insurance acceptable to Seller, naming Seller as a named insured.
6. Delays; Nonperformance. Seller shall not be liable for loss or damage due to delay or nonperformance in manufacture, delivery or installation resulting from any cause beyond Seller's reasonable control.
7. IN NO EVENT SHALL SELLER BE LIABLE FOR CONSEQUENTIAL, INCIDENTAL OR SPECIAL DAMAGES ARISING FROM DELAY OR FAILURE OF DELIVERY OR INSTALLATION.
8. Taxes. Buyer is responsible for any sales, use, excise or similar tax arising from the sale Product or services. Buyer shall pay or reimburse Seller for any such taxes.
9. Limited Warranty. Ten years from date of installation by authorized representative, not to exceed Ten years and three months of original shipment to original Buyer as follows: (a) foamed-in-place panels free from defects in material and workmanship under normal use and service; (b) pre-painted surfaces free from paint failure under normal use and service; and (c) hardware and electrical components free from defects in material and workmanship under normal use and service. Limited Warranty does not apply to the refrigeration system. Seller, at its option, will repair or exchange Products or parts covered by warranty. Buyer must notify Seller within 30 days of knowledge of problem or warranty is void. Buyer must obtain written authorization for return of Products. Limited Warranty does not include transportation costs, cost of removing defective parts or costs of reinstallation and does not apply to any Product or part subject to misuse, damage in transit, accident, negligence, alteration, improper installation or operation or to Product located outside the continental U.S. Limited Warranty does not apply to Product or parts supplied by Seller but manufactured by other companies. In no event shall Seller be liable for loss of use, revenue or profit or for any other indirect, incidental, special or consequential damages, including food spoilage, product loss or labor costs. THIS WARRANTY IS EXCLUSIVE AND IN LIEU OF ALL OTHER WARRANTIES WHETHER WRITTEN OR ORAL, STATUTORY, EXPRESS, OR IMPLIED (INCLUDING ALL WARRANTIES OF MERCHANTABILITY AND FITNESS FOR A PARTICULAR PURPOSE AND ALL WARRANTIES ARISING FROM COURSE OF DEALING OR USAGE OF TRADE). This Limited Warranty is Seller's sole and exclusive liability and Buyer's sole and exclusive remedy, whether in tort (including negligence), strict liability or otherwise. This Limited Warranty is not transferable.
10 Indemnification. Buyer shall indemnify Seller and its employees and agents from any loss, damage or expense, including attorney's fees, arising from or relating to transportation, installation, use or performance of any Product unless the claim arises directly from a Product defect covered by the Limited Warranty. Indemnification for employee claims shall not be limited by applicable worker's compensation, disability or other employee benefit acts.
11. Governing Law; Variation of terms. The rights and obligations of Seller shall be governed by the laws of the State of Minnesota. No waiver, modification or addition to terms shall bind Seller unless agreed to in writing by Seller. The provisions hereof are intended to be a final expression of the agreement of Seller and Buyer and are intended as an exclusive statement of all terms applicable to Buyer's order.

April 2012

FOODSERVICE CONSULTANT:
LANDMARK KITCHEN DESIGN, LLC
ARIZONA • NEW ENGLAND
TEL: (602) 443-0344
info@landmarkphx.com
www.landmarkphx.com

TENANT IMPROVEMENT FOR

Steak 'n Shake — Famous for Steakburgers

1966 WEST AVE L
LANCASTER, CA

9-24-18	BUILDING DEPT SUBMITTAL
1	
2	
3	
4	

FOODSERVICE WALK-IN SHOP DRAWINGS

FS-6.1

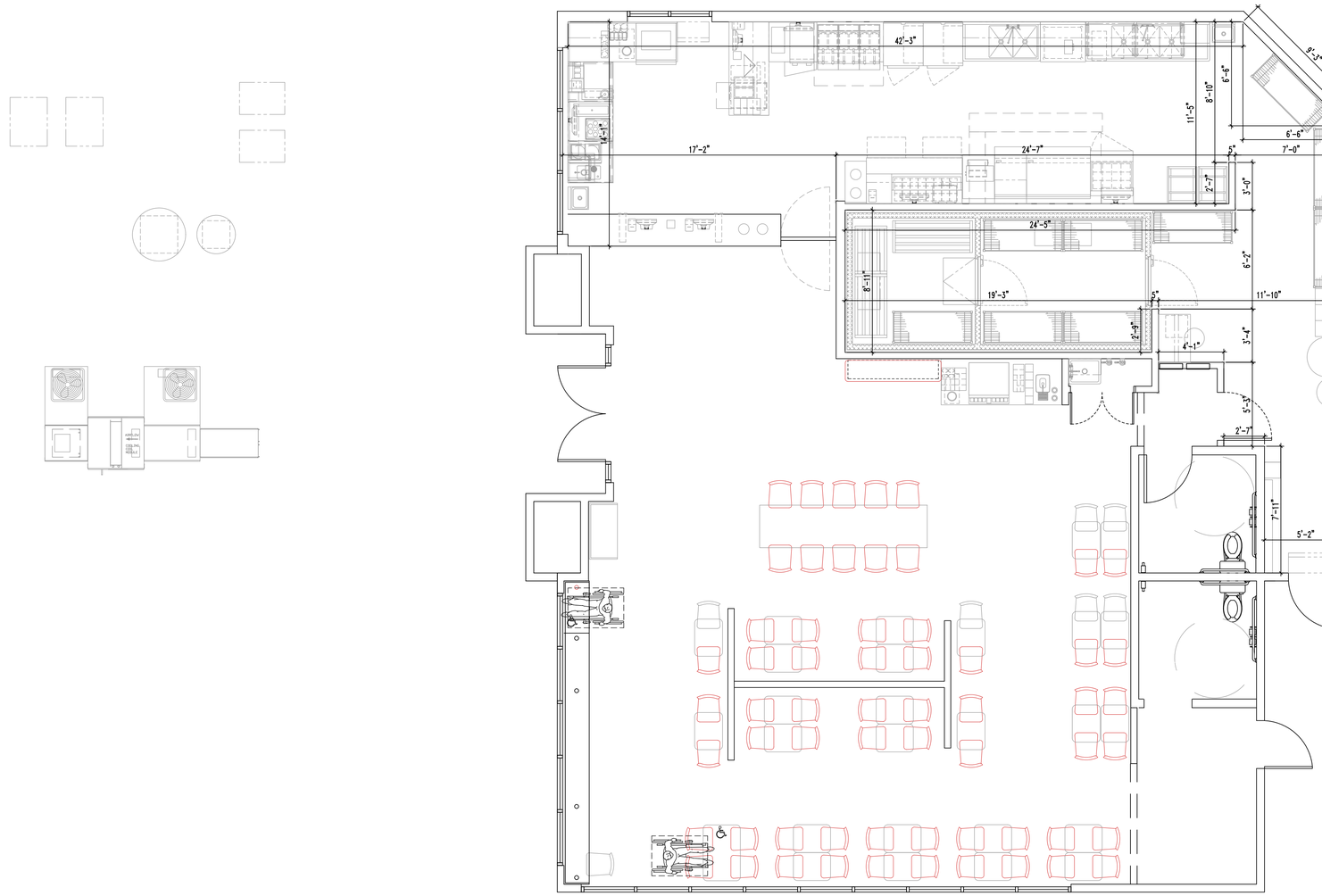

FLOOR PLAN

SCALE: 1/4" = 1'-0"

FOODSERVICE CONSULTANT:

LANDMARK KITCHEN DESIGN, LLC

ARIZONA • NEW ENGLAND
TEL: (602) 443-5264
info@landmarkfsc.com
www.landmarkfsc.com

TENANT IMPROVEMENT FOR

FAMOUS FOR Steak 'n Shake STEAKBURGERS

1966 WEST AVE L
LANDCASTER, CA

9-24-18	BUILDING DEPT SUBMITTAL
1	
2	
3	
4	

FOOD SERVICE CRITICAL DIMENSION PLAN

FS-7.0

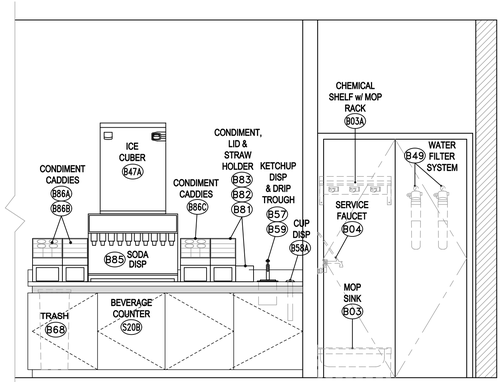

A FS-1.0 BEVERAGE COUNTER ELEVATION
1/2"=1'-0"

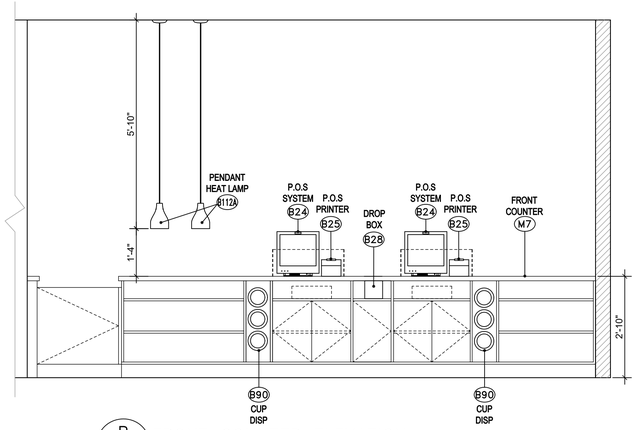

B FS-1.0 FRONT COUNTER ELEVATION
1/2"=1'-0"

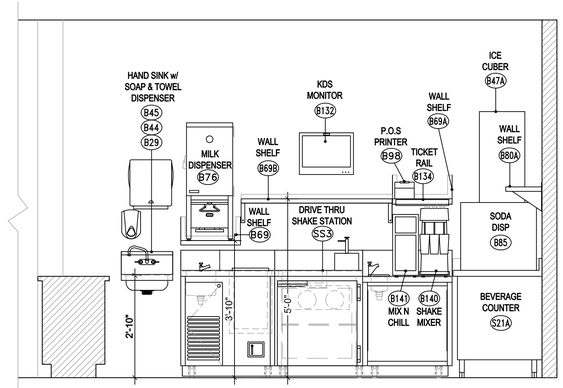

C FS-1.0 SHAKE STATION ELEVATION
1/2"=1'-0"

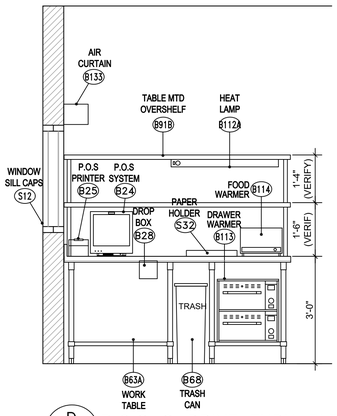

D FS-1.0 P.O.S @ DRIVE THRU ELEV
1/2"=1'-0"

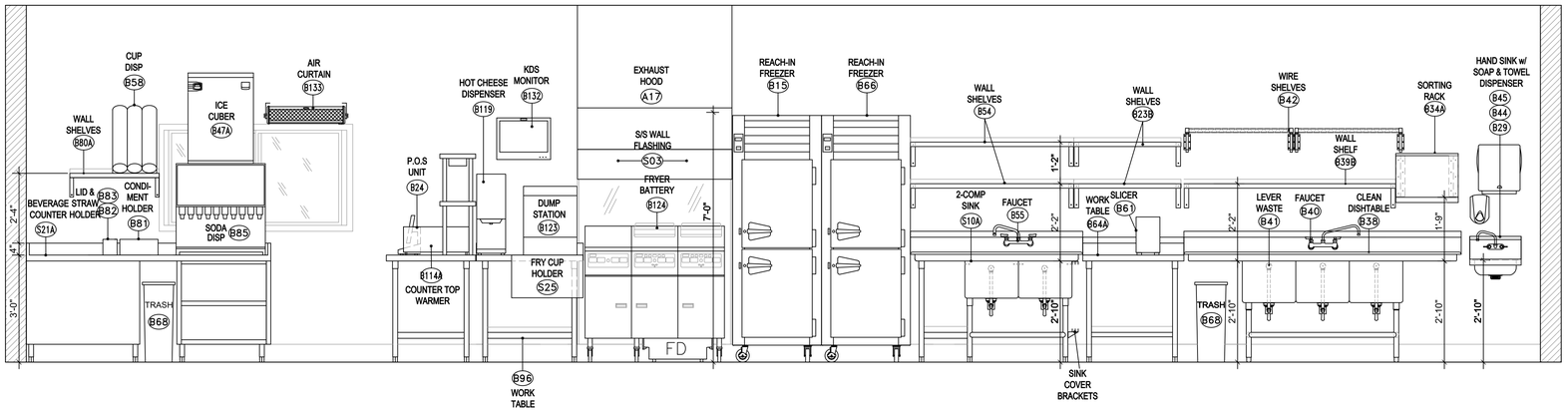

E FS-1.0 WARE WASH / PREP / FRY / DRIVE THRU ELEVATION
1/2"=1'-0"

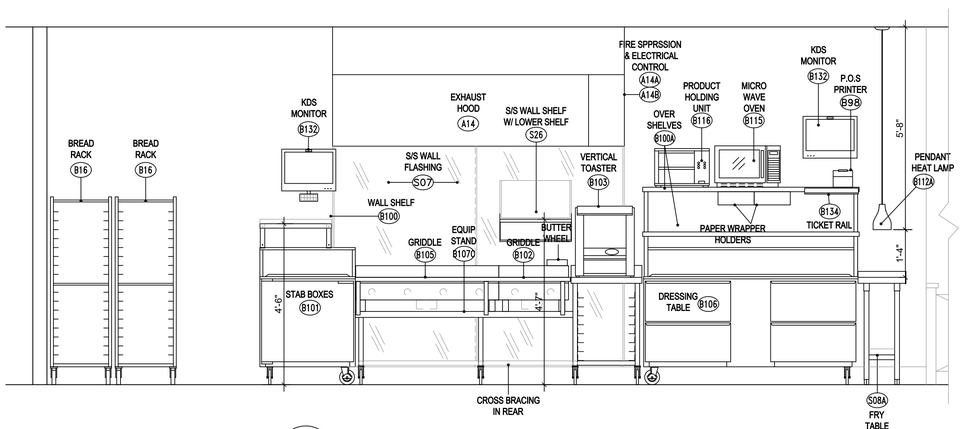

F FS-1.0 COOK LINE ELEVATION
1/2"=1'-0"

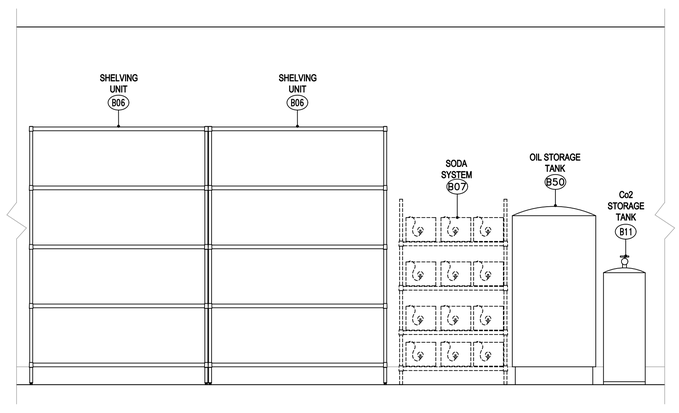

G FS-1.0 STORAGE WALL ELEVATION
1/2"=1'-0"

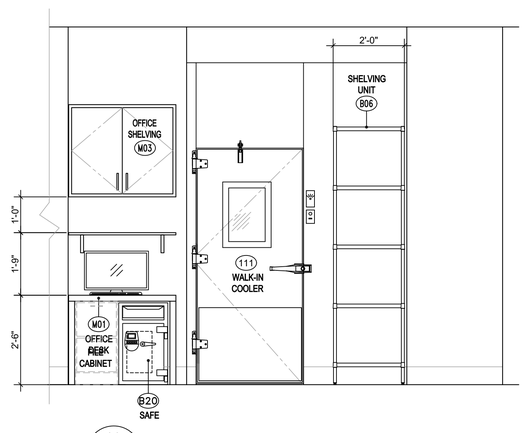

H FS-1.0 OFFICE ELEVATION
1/2"=1'-0"

FOODSERVICE CONSULTANT:
LANDMARK KITCHEN DESIGN, LLC
ARIZONA • NEW ENGLAND
TEL: (602) 443-5344
info@landmarkfsc.com
www.lauphlandfsc.com

TENANT IMPROVEMENT FOR
Famous for Steak 'n Shake Steakburgers

1966 WEST AVE L
LANCASTER, CA

4-24-18	BUILDING DEPT SUBMITTAL
1	
2	
3	
4	

EQUIPMENT ELEVATIONS

FS-8.0

GENERAL CONTRACTOR NOTES:

1. General Contractor to cut and provide holes through ceiling,roofs, walls and floors for ducts, refrig. lines etc. in accordance with local fire and building codes and in accordance with duct sizes specified. General Contractor to provide the resealing of all holes (including the "moping-in" of fan curbs and roof jacks.) General Contractor to provide all duct fire separation enclosures, wrappings, etc. as may be required by local building and fire codes.

2. Where noise or vibration producing equipment (dish machine, disposer, etc. is located adjacent to dining areas and/or any public areas. Provisions should be made by the General Contractor to "double stud" and sound proof common walls.

3. All roof curb and roof jacks to be provided, located and installed by G.C. including resealing of roof and roof penetrations.

4. "FS" Drawings are provided for the sole purpose of indicating outlet locations and equipment requirements only and do not relieve the General Contractor or subcontractor of the responsibility of complying with all applicable codes. Please see architect's drawings for all other requirements and codes.

5. It is the responsibility of the Owner, Architect and/or General Contractor to inform the K.E.C. in writing, any and all changes and all addendums to plans which are made prior to and during construction. K.E.C. assumes no responsibility for equipment deviations of size and/or utilities from lack of this information. The Owner will be responsible for all cost incurred by failure to give K.E.C. notice of changes.

6. Last dated revisions void all previous plans.

7. General Contractor to provide floor recesses (flat and level). Vapor Barriers and built in insulated floors (as shown on plans). if applicable.

8. Floor finish, cove base and interior cove in walk-in boxes to be provided by General Contractor unless otherwise specified by K.E.C.

9. Sleeves & Conduits to be provided by General Contractor in walls, floors & ceiling for lines (drains, refrigeration, etc.) to pass through and G.C.to reseal after lines are run.
   All conduit to be round metal, transite, P.V.C. or equal diameter as indicated on plan, minimum bending radius to be 24", factory "L's" will not be permitted. Conduit to meet local codes.

10. General Contractor to provide access to hoods at area above hoods for mounting of hood supports. If access is not provided, General Contractor to provide hood supports.
   All roof curb & jacks to be provided, located & installed by G.C., including resealing of roof & roof penetrations.

11. General Contractor to provide sprinkler heads in walk-in boxes and adequately protected against freezing.

12. Removal of window glass, window frames, doors, door frames and center post for entry of equipment shall be the responsibility of the General Contractor and at no expense to K.E.C. if necessary.

13. General Contractor to provide all wall backing per location and specification by K.E.C.

14. All dimensions shown are measured from finished walls, floors, ceilings and/or column to center lines of stubs or outlets. Allowances shall be made for miscellaneous obstructions, structures, venting, electrical, plumbing and thickness of finishes when framing and/or roughing-in as required.

15. When equipment is noted as existing or by vendor, utility requirements should match as indicated on the manufacturer's data plate. If existing equipment is not relocated, reconnect as required by code.

16. Where indicated to connect in or through valve compartment, contractor shall stub-up into valve compartment at height indicated on rough-in plan, cap their work and make final connections after equipment is in place.

17. General Contractor to provide all duct chases from hood thru roof, sized & constructed, conforming to codes.

18. General Contractor to provide waste container at job site for K.E.C.

19. Slope floors to floor drains.

20. Provide door wall openings and or passages to assure access for all kitchen equipment and front end items. Coordinate sizes with K.E.C.

21. Provide walk-in refrigerator/freezer depressions, to detail.

22. G.C. to provide enclosures from top of walk-in to ceiling (if required).

23 G.C. to provide enclosures from top of exhaust hood to ceiling (if required).

24. Provide coved base-molding or coved integral floor materials as required at all vertical surfaces for kitchen floors.

VENTILATION NOTES

1. Mechanical Contractor to provide fans, duct work, (all welding of hood and duct required) controls, duct collar, final connection, hanging of hoods, permits and make-up air equipment. The above furnished by H.V.A.C. contractor unless noted on drawing or contracted with K.E.C.

2. Mechanical contractor (H.V.A.C.) to balance exhaust system.

3. All duct collars, cutouts and penetrations in hoods to be located and provided by Mechanical Contractor in field.

REFRIGERATION CONTRACTORS NOTES

1. Refrigeration line to be installed and protected from damage.
   Refrigeration lines for walk-in refrigerators & freezers, to run overhead and drop down from compressors to evaporators.

2. All built-in walk-in refrigeration boxes shall be complete with insulation with proper vapor barrier and interior lights and switches outside. Electrical connection and mounting by E.C.

3. Do Not Scale. Use written dimensions shown on "K" plans.

FIRE PROTECTION SYSTEM NOTES

1. Where indicated on drawings a dry or liquid chemical system shall be provided to protect all cooking exhaust hoods, ducts, and cooking appliances against fire and re-flash by a fire control system. The size and number of systems shall be in conformance with N.F.P.A Pamphlet 96, and local and state codes. The system shall be installed by authorized installers.

2. The system shall be of the cartridge operated type, automatic actuated or be manually operable at the nozzle release and a remote manual pull operator shall be located as shown on the drawing. Actuation of the system shall provide automatic gas and/or electric fuel line cut-off.

3. Electrically controlled or manually controlled gas solenoid valve shall be installed by the plumbing contractor. The electrical contractor shall furnish and install line voltage wiring and conduit from cut-off relay to solenoid valve and connect cut-off relay and solenoid valve as required.

4. Electrical cooking equipment shall be shutoff at the electrical panel by means of shunt trips. Electrical contractor shall furnish and install shunt trips, line voltage wiring and conduit from fir protection micro-switch, or equivalent, to panels, to meet all local codes.

5. All hand held fire extinguishers to be provided by General Contractor.

MASONRY CONTRACTORS NOTES

1. All curbs & or recessed mat area dimensions are finished dimensions. Verify face and top finishes (where curb is exposed) with Architect, General Contractor or Owner.

2. All curb heights to be taken from finished floor to top of finished curb.

3. All curb dimensions are taken from finished wall to face of finished curb, or from finished face of curb to finished face of curb.

4. Provide a 3" - 4" radius cove where finished face of curb intersects the finished floor.

5. See Plumbing plan(s) for exact location of floor sinks and floor drains. Verify with P.C.

6. Do Not Scale, Use written dimensions shown on "K" plans.

7. Provide masonry curbs with trowel-smooth and level finish as required.

PLUMBING CONTRACTOR NOTES

1. All rough-ins related to foodservice equipment only. Please see architectural/engineering plans for additional plumbing requirements and codes.

2. Final connections to all equipment to be by plumbing contractor, ALL required materials, such as stops, valves, filters, check valves, pressure reducing valves, gate valves, solenoid valves, syphon breakers, piping, tubing, misc. fittings, traps, etc. shall be supplied by the Plumbing Contractor unless otherwise specified.

3. Water quality requirement. The recommended minimum water quality standards whether untreated or pre-treated, based upon 10 hours of use per day, and a daily blow-down, are as follows:

A.	Total dissolved solids	less than 300 parts per million
B.	Total alkalinity	less than 85 parts per million
C.	Silica	less than 13 parts per million
D.	pH Factor	greater than 7.5

4. Verify all plumbing rough-ins and location with owner, vendor or G.C. on existing equipment or other equipment not provided by K.E.C.

5. Plumbing Contractor to Furnish and Install the following as per code:

   A. All water, waste, gas, and steam service to point of rough-in as shown on plan. Rough-in outlets to stub 4" out of walls at height indicated from finished floor to center line of outlet.
   B. Pressure reducing and/or regulating valves for dishwashers, booster heaters, and as otherwise noted, in kitchen areas.
   C. All floor sinks, complete with top grates, and removable sediment buckets set flush with finished floor, unless noted or as per local code.
   D. All waste lines, direct or indirect, except as noted, shall be pitched downward. All waste lines shall have adequate clean-out provisions.
   E. Indirect waste lines for walk-in refrigerators/freezers, pitched 4"/12" (minimum) and with a "P" trap at end over floor sink as required by local code.
   F. Heater tape, with 35 watts per lineal foot of drain line, and insulation of all drain lines inside freezer compartments.
   G. Install in an accessible location the fire control gas shutoff valve as supplied by Fire Protection System Supplier. (If gas cooking equipment is used).
   H. Vacuum breakers as required.
   I. Insulation of all steam, hot water and condensate lines in kitchen.
   J. Clean-out valves for steam condensate, and air lines.
   K. All piping condensate & drain lines, to and from equipment must be kept a minimum of (6") above finished floor to allow for cleaning, & or prevailing local code.
   L. In line water filters are recommended for the following equipment: (Water filter by P.C. unless otherwise noted)

   Water Heaters
   Booster Heaters
   Sink Heaters
   Dish Washers
   Glass Washers
   Soda Systems
   Ice Machines
   Steam Equipment

6. Plumbing Contractor to interconnect dish machine with booster heater and water-type ventilators with control panels as per manufacturer's instruction, when applicable and noted.

7. All lines routed through equipment shall not interfere with intended use of, or servicing of equipment.

8. All vent pipes are to be concealed in walls or column chases.

9. Interconnection between steam equipment and steam generator.

10. Grease trap to be specified and located by mechanical engineer and provided and installed by mechanical or plumbing contractor.

11. Where equipment is noted as existing, utility requirements should be verified and match as indicated on manufacturer's date plate. If equipment is not relocated, reconnect as required by code. Plumbing Contractor to verify existing utilities and equipment requirements and re-use if possible.

12. All plumbing locations are shown at optimum spots. Utilize all existing services where applicable.

13. All plumbing to be concealed within walls where possible.

14. Hot water heater to provide a minimum of 140 degree water to all kitchen equipment.

15. All dimensions shown are measured from finished walls, floors ceilings and/or column to center lines of stubs or outlets. The plumbing contractor shall make allowances for miscellaneous obstructions such as piping mains, electrical components, structures, venting and thickness of finishes when roughing-in as required.

16. All faucets and/or disposers located on Food Service Plan shall be provided by K.E.C. and installed by Plumbing Contractor, unless otherwise noted.

17. Hand sinks are to be mounted and installed by Plumbing Contractor.

ELECTRICAL CONTRACTOR NOTES

1. The electrical specifications and connections shown on these plans are for food service equipment requirements only. It is the responsibility of the ELECTRICAL CONTRACTOR to consult the architect's, mechanical engineers and/or general contractor's plans and the owner for further building electrical requirements.

2. Access areas and cut-ins on custom and buyout equipment and fixtures shall be provided by the K.E.C. as required for proper installation of electrical outlets, junction boxes, home runs, etc. The electrical contractor shall provide and install shields and extension boxes as required.

3. The Electrical Contractor shall connect all compressors and provide fused disconnects, magnetic starters and thermo overload protection as required.

4. Vapor proof light fixtures for exhaust hoods shall be furnished by the HOOD SUPPLIER. The Electrical Contractor shall supply and install pull boxes,conduit, wire, bulbs, etc. Provide and connect to a wall mounted switch (with pilot light) located per plans.

5. Vapor proof light fixtures for walk-in coolers and freezers shall be furnished with an exterior pilot light switch by the Walk-in Supplier. It shall be the responsibility of the Electrical Contractor to interconnect and install these items as required. Electrical Contractor shall connect door heaters, relief ports. E.C. to supply install, & connect all drain line heater tape.

6. Electrical Contractor to interconnect the Remote Refrigerations' Compressor, Evaporator, T-stat, Solenoid and Defrost Timer (All Controls) where required.

7. All electrical materials including wiring, flex, conduit, switches, disconnects, magnetic starters, thermo-overload protectors, transformers, electrical panels, cords, plugs, receptacles, bulbs, etc. shall be supplied by the electrical contractor unless specified in these plans or in writing by the Food Service Equipment Contractor.

8. It shall be the responsibility of the Electrical Contractor to provide water proof power outlet(s) on the roof for exhaust system fan(s) make-up air fan(s) and refrigeration system(s) as required. Low voltage (or common voltage) wiring shall also be supplied and installed by the electrical contractor when necessary to control and interconnect the above systems.

9. The electrical contractor shall furnish and install any and all electrical contractors as required by applicable codes and ordinances.

10. All dimensions shown on these plans are measured from finished walls, floors, ceilings and/or column center lines or grid lines to enter lines of outlets and pull boxes. The Electrical Contractor shall make allowances for finishes when roughing-in as required.

11. The Electrical Contractor shall provide and install element contractor (relay) shutoffs (shunt trip) and/or solenoid shutoff valve and interconnect with the fire suppression system for the cooking equipment, to shut off all equipment automatically in case of fire. Verify with local codes for shutdown of exhaust fan(s) and or make-up air fan(s) requirements.

12. All 115 volt convenience outlets not designated with specific loads are to be rated 20.0 amps. Electrical Contractor is to provide any additional outlets as called for by architect, owner and/or general contractor.

13. Electrical Contractor to provide caps and cords for all equipment where caps and cords are not standard with manufacture. Electrician to also shorten any cords supplied with equipment if requested to do so by owner or Food Service Equipment Contractors' representative.

14. Electrical Contractor to provide all rough-in building services and make final connections to all food service equipment provided by K.E.C. This shall include the installation mounting of the Air Curtain(s),/Microswitch(s).

15. Electrical Contractor to provide temporary power to Food Service Equipment Contractors' installers, as required.

16. All rough-ins are shown in optimum spots, utilize all existing services when applicable.

17. All receptacles and junction boxes to be flushed mounted in walls with stainless steel cover plate.

18. Verify all electrical rough-ins and locations with owner, vendor, or General Contractor on existing equipment or other equipment not provided by K.E.C.

19. Where applicable, Electrical Contractor to provide conduit wiring, install electrical components, and interwire, between the following:
   A. Control panels to ventilators and exhaust/supply fans per manufacture's instructions.
   B. Kitchen exhaust hood/ventilators to fire control system and hood controls.
   C. Call lights and waitress control systems.
   D. Light fixture, chandeliers, etc. Lamps for any light fixtures are to be provided and installed by the Electrical Contractor unless indicated on the lighting schedules or drawings.
   E. Module counters and components or equipment mounted on counters.
   F. Heat Lamps are to be connected thru remote controls, pilot lights, etc.

20. Electrical Contractor to provide and install all light bulbs for fixtures, where applicable.

21. All item's shown with P.I. connections, plug into receptacles furnished by the K.E.C. as part of the equipment.

22. Where connection is shown as J.B., Electrical Contractor shall connect to J.B. furnished as part of the equipment.

23. All horizontal dimensions are from face of finished wall to center-line of outlet or from center-line of outlet to center-line of outlet unless otherwise noted.

24. All symbols for outlet on walls are indicated at a specific height. Height of outlet is given from finished floor TO CENTERLINE OF OUTLET.

FOODSERVICE CONSULTANT:
LANDMARK KITCHEN DESIGN, LLC
ARIZONA • NEW ENGLAND
TEL: (602) 443-0344
info@landmarkphx.com
www.landmarkphx.com

TENANT IMPROVEMENT FOR

1966 WEST AVE L
LANCASTER, CA

9-24-18	BUILDING DEPT SUBMITTAL
1	
2	
3	
4	

FOOD SERVICE GENERAL NOTES

FS-9.0