ABBREVIATIONS

A.B.	ANCHOR BOLT
ABV.	ABOVE
ADDL.	ADDITIONAL
ALT.	ALTERNATE
ARCH.	ARCHITECT, ARCHITECTURAL
BTWN.	BETWEEN
BLW.	BELOW
BLDG.	BUILDING
BLK.	BLOCK
BLKG.	BLOCKING
BM.	BEAM
B.N.	BOUNDARY NAILING
BOTT.	BOTTOM
CLR.	CLEAR
CLG.	CEILING
CMU	CONCRETE MASONRY UNITS
COL.	COLUMN
CONC.	CONCRETE
CONN.	CONNECTION
CONST.	CONSTRUCTION
CONT.	CONTINUOUS
CF	CUBIC FOOT
C.J.	CEILING JOIST
CVR	COVER
DIA.	DIAMETER
DIR.	DIRECTION
DWG.	DRAWING
EA.	EACH
EF	EACH FACE
ELEC.	ELECTRICAL
ELEV.	ELEVATION
E.N.	EDGE NAILING
ENGR.	ENGINEER
E.J.	EXPANSION JOINT
EQ.	EQUAL
EXT.	EXTERIOR
F.F.	FINISHED FLOOR
FG	FINISHED GRADE
F.N.	FIELD NAILING
FLR.	FLOOR
FND.	FOUNDATION
FT	FOOT, FEET
FTG.	FOOTING
GA.	GAGE
GALV.	GALVANIZED
GB	GRADE BEAM
GND	GROUND
GR	GRADE
HT.	HEIGHT
HORIZ.	HORIZONTAL
HSS	HOLLOW STEEL SECTION
INFO.	INFORMATION
INTER.	INTERIOR
K.P.	KING POST
KSI	KIPS PER SQ INCH
LBS	POUNDS
LNG.	LONG
LT. WT.	LIGHT WEIGHT
MAX.	MAXIMUM
M.B.	MACHINE BOLT
MECH.	MECHANICAL
MANUF.	MANUFACTURER
MIN.	MINIMUM
MISC.	MISCELLANEOUS
O.C.	ON CENTER
PSF	POUNDS PER SQ FOOT
PSI	POUNDS PER SQ INCH
REINF.	REINFORCEMENT
REQ.	REQUIRE
SCHED.	SCHEDULE
SF	SQUARE FOOT
SHT.	SHEET
SHTG.	SHEATHING
SIM.	SIMILAR
SPEC.	SPECIFICATION
SQ	SQUARE
STRD.	STANDARD
STL.	STEEL
STRUC.	STRUCTURAL
S.W.	SHEAR WALL
SYM	SYMMETRICAL
THK.	THICK
T&B	TOP & BOTTOM
TOF	TOP OF FOOTING
TL	TOP OF LEDGER
TOS	TOP OF STEEL
TS	TUBE STEEL
TYP.	TYPICAL
U.N.O.	UNLESS NOTED OTHERWISE
VERT	VERTICAL
WF	WIDE FLANGE BEAM
W/	WITH
W/O	WITHOUT
WWF	WELDED WIRE FABRIC
WT	WEIGHT
WP	WORKING POINT

SYMBOLS

90°	ANGLE
@	AT
?	CENTERLINE
?	PLATE
#	NUMBER
ø	DIAMETER
PL	PROPERTY LINE

FOUNDATION NOTES

1. THE DESIGN OF THE FOUNDATION SYSTEM IS BASED UPON THE BUILDING CODE MINIMUM RECOMMENDATIONS AND DEFAULT VALUES. THE OWNER MAY ELECT TO HAVE A GEOTECHNICAL ENGINEER REVIEW THE SPECIFIC SOILS ON THE SITE TO VERIFY THE DEFAULT DESIGN VALUES ARE ADEQUATE FOR BEARING, DIFFERENTIAL SETTLEMENT, PROTECTION FROM CORROSIVE SOILS, ETC. IF ANY POTENTIALLY UNFAVORABLE SOILS CONDITIONS ARE ENCOUNTERED DURING CONSTRUCTION, THE SERVICES OF A GEOTECHNICAL ENGINEER WILL BE REQUIRED.
2. THE ALLOWABLE SOIL BEARING PRESSURE IS 1,500 PSF (IN COMPETENT NATIVE SOILS OR 90% COMPACTED FILL)
3. REMOVE LOOSE SOIL AND STANDING WATER FROM FOUNDATION EXCAVATIONS PRIOR TO PLACING CONCRETE. THE GEOTECHNICAL ENGINEER SHALL INSPECT AND APPROVE ALL EXCAVATIONS, SOIL COMPACTION WORK PRIOR TO PLACEMENT OF ANY REBAR OR CONCRETE, SHORING INSTALLATIONS, BACKFILL MATERIALS AND BACK FILLING PROCEDURES.
4. LOCATE AND PROTECT EXISTING UTILITIES TO REMAIN DURING AND/OR AFTER CONSTRUCTION.
5. REMOVE ABANDONED FOOTINGS, UTILITIES, ETC. WHICH INTERFERE WITH NEW CONSTRUCTION, UNLESS OTHERWISE INDICATED.
6. NOTIFY THE OWNER'S REPRESENTATIVE IF ANY BURIED STRUCTURES NOT INDICATED, SUCH AS CESSPOOLS, CISTERNS, FOUNDATIONS, ETC., ARE FOUND.
7. THE CONTRACTOR IS SOLELY RESPONSIBLE FOR EXCAVATION PROCEDURES INCLUDING LAGGING, SHORING, UNDERPINNING AND PROTECTION OF EXISTING CONSTRUCTION.

REINFORCING STEEL NOTES

1. ALL REINFORCING STEEL SHALL CONFORM TO THE REQUIREMENTS OF ASTM A-615 GRADE 60 FOR NO.5 AN LARGER, ASTM A-615 GRADE 40 FOR NO.4 AND SMALLER.
2. CLEAR COVERAGE OF CONCRETE OVER OUTER REINFORCING BARS SHALL BE AS FOLLOWS:
   A. CONCRETE POURED DIRECTLY AGAINST EARTH, 3" CLEAR.
   B. STRUCTURAL SLAB, 3/4" CLEAR TOP AND BOTTOM UNLESS NOTED OTHERWISE.
   C. CONCRETE EXPOSED TO WEATHER, 1 1/2" CLEAR (2" CLEAR FOR #6 BARS OR LARGER).
   D. INTERIOR BEAMS AND COLUMNS, 1-1/2" CLEAR TO FACE OF STIRRUP.
   E. FORMED CONCRETE NOT INCLUDED ABOVE, 3/4" CLEAR.
3. WIRE MESH SHALL CONFORM TO ASTM A-185, AND SHALL BE LAPPED 1-1/2 SPACES OR 12" MINIMUM.
4. ALL REINFORCING BAR BENDS SHALL BE MADE COLD.
5. REINFORCING STEEL SHALL BE SPLICED WITH CLASS B SPLICES UNLESS NOTED OTHERWISE ON THE DRAWINGS.
6. LOW HYDROGEN ELECTRODES SHALL BE USED WHEREVER REINFORCING STEEL IS WELDED. BARS SHALL BE A70 GRD. 60 MIN. FOR WELDABILITY.

CONCRETE NOTES

1. CONCRETE MIXES SHALL BE DESIGNED BY A RECOGNIZED TESTING LABORATORY AND COPIES OF THE DESIGN SHALL BE SENT TO THE ARCHITECT AND THE ENGINEER. COMPRESSIVE STRENGTH TEST REPORTS SHALL BE SUBMITTED TO THE BUILDING DEPARTMENT AND THE ARCHITECT. ALL CONCRETE EXCEPT FOUNDATION CONCRETE SHALL CONTAIN POLYMER BASED WATER REDUCING ADMIXTURE.
2. PORTLAND CEMENT SHALL CONFORM TO ASTM C-150-07. TYPE II. AGGREGATE FOR STONE CONCRETE SHALL CONFORM TO ASTM C-33-03. WATER USED IN MIXING CONCRETE SHALL CONFORM TO ASTM C1602.
3. ALL REINFORCING BARS, ANCHOR BOLTS, AND ALL OTHER CONCRETE INSERTS SHALL BE WELL SECURED IN POSITION PRIOR TO PLACING CONCRETE.
4. THE MAXIMUM SLUMP SHALL NOT EXCEED 4" +/- 1" FOR FOOTINGS, SLABS ON EARTH, AND MASS CONCRETE, AND 5" +/- 1" FOR OTHER CONCRETE.
5. MINIMUM ULTIMATE COMPRESSIVE STRENGTH AT 28 DAYS SHALL BE AS FOLLOWS: (MINIMUM 5 SACKS OF CEMENT PER CUBIC YARD) (MAXIMUM WATER/CEMENT RATIO TO BE 0.5).
   A. SLABS ON EARTH, SIDEWALK, CURBS ETC.....3000 P.S.I.
   B. FOUNDATIONS.....3000 P.S.I.
   C. GRADE BEAMS (WHERE DENOTED).....3000 P.S.I.
6. ALL STRUCTURAL CONCRETE IS TO BE REINFORCED.
7. THERE SHALL BE NO FLY ASH IN THE CONCRETE MIX FOR SLABS, CONCRETE WALLS, AND COLUMNS THAT ARE VISUALLY EXPOSED.

MASONRY

1. BLOCK SHALL BE MEDIUM WEIGHT UNITS CONFORMING TO ASTM- C-90 GRADE N-1. USE UNITS OPEN ONE END, AND BOND BEAM UNITS AT HORIZONTAL REINFORCING. WHEN BLOCKS ARE EXPOSED OBTAIN APPROVAL OF SUBMITTAL FROM ARCHITECT. UNITS SHALL ATTAIN A MINIMUM COMPRESSIVE STRENGTH AS REQUIRED TO MEET THE MASONRY COMPRESSIVE STRENGTH OF MASONRY f'm SPECIFIED ON THE PLANS AS FOLLOWS:
   A. 1,900 PSI FOR SPECIFIED f'm UP TO 1,500 PSI
   B. 2,800 PSI FOR SPECIFIED f'm UP TO 2,000 PSI
   C. 3,750 PSI FOR SPECIFIED f'm UP TO 2,500 PSI
   D. 4,800 PSI FOR SPECIFIED f'm UP TO 3,000 PSI
2. MIN. SPECIFIED COMPRESSIVE STRENGTH SHALL BE f'm = 1,500 PSI, UNLESS OTHERWISE SPECIFIED ON THE PLANS.
3. CEMENT: ASTM C-150, LOW ALKALI, TYPE 1 OR 11 PORTLAND CEMENT. (MASONRY CEMENT AND PLASTIC CEMENT SHALL NOT BE USED)
4. MORTAR:
   A. CONFORMING TO ASTM C-270, TYPE [S].
   B. MIX PROPORTIONS SHALL CONFORM TO ASTM C-270.
   C. AGGREGATED SHALL CONFORM TO ASTM C-144.
5. GROUT:
   A. CONFORMING TO ASTM C-476.
   B. ATTAINS THE MASONRY COMPRESSIVE STRENGTH f'm OR 2,000 PSI AT 28 DAYS, WHICHEVER IS GREATER.
   C. MIX PROPORTIONS SHALL CONFORM TO ASTM C-476
   D. AGGREGATES SHALL CONFORM TO ASTM C-404
   E. USE COARSE GROUT IN GROUT SPACES 2 INCHES OR MORE IN WIDTH AND CELLS TO BE GROUTED SOLID.
6. ADMIXTURES: DO NOT USE ANY ADMIXTURES IN MORTAR OR GROUT WITHOUT APPROVAL BY THE ARCHITECT.
7. MEASURE MATERIALS FOR MORTAR AND GROUT IN CALIBRATED DEVICES. SHOVEL MEASUREMENTS ARE NOT ACCEPTABLE.
8. ADJUST THE WATER CONTENT OF THE MORTAR AND GROUT MIXES TO PROVIDE PROPER WORKABILITY UNDER EXISTING FIELD CONDITIONS WITHOUT SEGREGATION.
9. REINFORCING STEEL:
   A. REBAR: ASTM A-615, GRADE 60 (FY=60KSI).
   B. JOINT REINFORCEMENT: ASTM A-951
10. LAP REINFORCING STEEL AT SPLICES WITH A MINIMUM 48 BAR DIAMETERS, UNLESS NOTED OTHERWISE. WHERE CLEAR DISTANCE BETWEEN BARS AT ADJACENT SPICES IS 3 INCHES OR LESS, INCREASE LAP LENGTH 30% UNLESS SPLICES ARE STAGGERED AT LEAST 24 BAR DIAMETERS.
11. DOWELS FOR WALLS AND COLUMNS SHALL MATCH SIZE AND SPACING OF WALL AND COLUMN REINFORCING STEEL.
12. MASONRY WORK SHALL CONFORM TO THE LATEST ADOPTED EDITION OF THE LABC. AND THE 2008 MSJC SPECIFICATIONS.
13. CONCRETE BLOCK UNITS ARE TO BE STAGGERED & TO HAVE VERTICAL CONTINUITY OF CELLS UNOBSTRUCTED.
14. IF WORK IS STOPPED AN HOUR OR LONGER, PROVIDE HORIZONTAL CONSTRUCTION JOINT BY STOPPING GROUT 1 ½" BELOW TOP OF MASONRY UNIT.
15. SPECIAL INSPECTION IS REQUIRED FOR ALL MASONRY WORK.
16. GROUT ALL MASONRY WALLS SOLID. GROUTING LIFTS SHALL NOT EXCEED 5'-0" IN HEIGHT IN ACCORDANCE WITH 2008 MSJC SPECIFICATIONS.
17. THE CLEAR DISTANCE BETWEEN THE SURFACE OF A BAR AND ANY SURFACE OF A MASONRY UNIT SHALL BE NOT LESS THAN ¼" FOR FINE GROUT AND NOT LESS THAN ½" FOR COURSE GROUT.
18. SECURE REBAR AGAINST DISPLACEMENT PRIOR TO GROUTING AT INTERVALS NOT GREATER THAN 200 BAR DIAMETERS.
19. TERMINATE HORIZONTAL BARS WITH A STANDARD HOOK AT THE JAMBS OF WALL OPENINGS.
20. VERIFY SPECIFIED COMPRESSIVE STRENGTH OF MASONRY IN ACCORDANCE WITH ONE OF THE FOLLOWING METHODS: MASONRY PRISM TESTING, MASONRY PRISM TEST RECORD OR UNIT STRENGTH METHOD. FIVE MASONRY PRISM TESTS SHALL BE BUILT AND TESTED PRIOR TO CONSTRUCTION. THREE MASONRY PRISM TESTS (PER 5,000 SQ. FT. OF FLOOR AREA, 3 MIN.) SHALL BE BUILT AND TESTED DURING CONSTRUCTION WHEN FULL STRESSES ARE USED IN DESIGN.

FOUNDATIONS

1. THE DESIGN OF THE FOUNDATION SYSTEM IS BASED UPON THE CRITERIA AND RECOMMENDATIONS CONTAINED IN THE GEOTECHNICAL INVESTIGATION REPORT GENERATED BY: WORKMAN GEOTECHNICAL, REPORT FILE NO. WE18-070839, DATED DECEMBER 01, 2018.
2. THE GEOTECHNICAL INVESTIGATION REPORT AND ITS RECOMMENDATIONS SHALL BE FOLLOWED AND SHALL BE CONSIDERED MINIMUM REQUIREMENTS UNLESS MORE STRINGENT REQUIREMENTS ARE PRESENTED IN THE SPECIFICATIONS OR ON THE DRAWINGS.
3. PER GEOTECHNICAL INVESTIGATION REPORT, THE ALLOWABLE SOILS CRITERIA ARE AS FOLLOWS: REFER TO SOILS REPORT FOR CRITERIA.
4. REMOVE LOOSE SOIL AND STANDING WATER FROM FOUNDATION EXCAVATIONS PRIOR TO PLACING CONCRETE. THE GEOTECHNICAL ENGINEER SHALL INSPECT AND APPROVE ALL EXCAVATIONS, SOIL COMPACTION WORK PRIOR TO PLACEMENT OF ANY REBAR OR CONCRETE, SHORING INSTALLATIONS, BACKFILL MATERIALS AND BACK FILLING PROCEDURES.
5. LOCATE AND PROTECT EXISTING UTILITIES TO REMAIN DURING AND/OR AFTER CONSTRUCTION.
6. REMOVE ABANDONED FOOTINGS, UTILITIES, ETC. WHICH INTERFERE WITH NEW CONSTRUCTION, UNLESS OTHERWISE INDICATED.
7. NOTIFY THE OWNER'S REPRESENTATIVE IF ANY BURIED STRUCTURES NOT INDICATED, SUCH AS CESSPOOLS, CISTERNS, FOUNDATIONS, ETC., ARE FOUND.
8. THE CONTRACTOR IS SOLELY RESPONSIBLE FOR EXCAVATION PROCEDURES INCLUDING LAGGING, SHORING, UNDERPINNING AND PROTECTION OF EXISTING CONSTRUCTION.
9. PLACE BACKFILL BEHIND RETAINING WALLS AFTER CONCRETE OR MASONRY HAS ATTAINED FULL DESIGN STRENGTH. BRACE BUILDING AND PIT WALLS BELOW GRADE FROM LATERAL LOADS UNTIL ATTACHED FLOORS AND SLABS ON GRADE ARE COMPLETE AND HAVE ATTAINED FULL DESIGN STRENGTH.
10. THE CONTRACTOR SHALL PROVIDE CARE IN DRILLING, PLACEMENT OF STEEL REINFORCEMENT, AND POURING OF CONCRETE TO AVOID DISTURBANCE OF PILE BORING WALLS. THE STEEL REINFORCEMENT CAGE SHALL BE INSTALLED AND CONCRETE SHALL BE PLACED INTO THE PILE HOLE IMMEDIATELY AFTER THE HOLE IS DRILLED. PILE HOLES SHALL NOT BE LEFT OPEN OVERNIGHT. WHERE PILE SPACING IS LESS THAN THREE DIAMETERS, DRILLING SHALL NOT BE CARRIED OUT BEFORE THE PREVIOUSLY POURED PILE CONCRETE HAS SET FOR AT LEAST TWENTY FOUR HOURS.
11. IN THE EVENT OF SOIL OR WATER SEEPAGE INTO THE PILE EXCAVATION, CASING AND/OR THE USE OF "POLYMER-SLURRY" DRILLING FLUID MAY BE REQUIRED IF CAVING IS ENCOUNTERED BELOW THE WATER SEEPAGE LEVEL, IN ORDER TO ACHIEVE THE REQUIRED DEPTH, AND MAINTAIN AN OPEN EXCAVATION TO ALLOW FOR THE PLACEMENT OF REINFORCING STEEL AND CONCRETE. CASING SHALL BE PULLED AS THE PILE EXCAVATION IS FILLED WITH CONCRETE, MAINTAINING AT LEAST FIVE FEET OF CONCRETE HEAD INSIDE THE CASING. CONCRETE SHALL BE PLACED AND VIBRATED THROUGHOUT THE FULL LENGTH OF THE PILE SO THAT VOIDS DO NOT EXIST IN EITHER THE PILE BASE OR THE SHAFT. PLACEMENT PROCEDURES SHALL BE USED TO ENSURE THAT AGGREGATE SEGREGATION DOES NOT OCCUR.

STRUCTURAL STEEL

1. FABRICATION AND ERECTION OF STRUCTURAL STEEL SHALL BE IN ACCORDANCE WITH THE LATEST EDITION OF AISC SPECIFICATIONS FOR STRUCTURAL STEEL BUILDINGS, AND THE LATEST EDITION OF AISC SEISMIC PROVISIONS FOR STRUCTURAL STEEL BUILDINGS. WHERE THE STRUCTURAL STEEL IS EXPOSED, FABRICATION AND ERECTION SHALL ALSO BE IN ACCORDANCE WITH AISC CODE OF STANDARD PRACTICE FOR ARCHITECTURALLY EXPOSED STRUCTURAL STEEL.
2. STRUCTURAL STEEL SHALL CONFORM TO ASTM DESIGNATION AS INDICATED BELOW (U.N.O.):
   A. ALL WIDE FLANGE SHAPES A992, GRADE 50
   B. STEEL ANGLES A36
   C. ALL PLATES A36
   D. HSS (RECTANGULAR AND SQUARE) A500, GRADE B
   E. HSS (ROUND) A500, GRADE B
   F. PIPE COLUMNS A53, GRADE B
   G. CHANNELS (C AND MC SECTIONS) A36
   H. ALL OTHER STRUCTURAL SECTIONS A572, GRADE 50
   I. STEEL TO STEEL CONNECTION BOLTS A325X
   J. ANCHOR BOLTS F1554 GR36 OR A36
   K. THREADED RODS AND HANGER RODS A36
   L. NUTS FOR BOLTS AND MACHINE BOLTS A563
   M. HARDENED WASHERS F436
   N. UNHARDENED WASHERS F844
   O. PLAIN WASHERS ANSI B18.22.1
   P. BEVELED WASHERS ANSI B18.23.1
3. ALL STEEL SHALL BE PROVIDED BY A CITY OF LOS ANGELES LICENSED FABRICATOR.
4. WHEN FABRICATING SIMPLY SUPPORTED BEAMS, PLACE NATURAL CAMBER UP.
5. SPLICE MEMBERS ONLY WHERE INDICATED.
6. HIGH STRENGTH BOLTS SHALL BE INSTALLED IN ACCORDANCE WITH THE LATEST EDITION OF AISC SPECIFICATIONS FOR STRUCTURAL JOINTS USING ASTM A325 OR A490 BOLTS. HIGH STRENGTH BOLTS SHALL BE BEARING TYPE WITH THREADS EXCLUDED FROM THE FROM THE SHEAR PLANES (I.E. A325-X) UNLESS NOTED OTHERWISE.
7. ALL BOLTED CONNECTIONS SHALL HAVE A MINIMUM OF TWO BOLTS UNLESS SHOWN OTHERWISE. MINIMUM SIZE OF BOLTS FOR STRUCTURAL STEEL CONNECTIONS SHALL BE 3/4" DIA. EXCEPT WHEN OTHERWISE SHOWN OR NOTED.
8. ALL HOLES SHALL BE STANDARD DIAMETER U.N.O.
9. ALL FLANGE STIFFENER PLATES SHALL BE ORIENTED SO THAT ROLLING DIRECTION OF PLATE IS PARALLEL WITH DIRECTION OF PRINCIPAL STRESS.
10. AFTER FABRICATION, ALL STEEL SHALL BE CLEANED FREE OF RUST, LOOSE MILL SCALE AND OIL.
11. PROVIDE FILLS AT SPLICES OF PARTS HAVING MORE THAN 1/8" DIFFERENCE IN THICKNESS.
12. PROVIDE BEVELED WASHERS ON ALL CONNECTIONS WHERE SLOPE SURFACE EXCEEDS 1:20.
13. HEADED ANCHOR STUDS AND THREADED STUDS SHALL BE NELSON GRANULAR FLUX-FILLED, AND SHALL BE MADE FROM COLD FINISHED LOW CARBON STEEL, CONFORMING TO A-108, GRADES 1015 – 1020 WITH A MINIMUM TENSILE STRENGTH OF 60,000 PSI. (COLA RR 2729). STUD WELDING INSPECTION AND TESTING SHALL CONFORM TO AWS D1.1.
14. DEFORMED BAR ANCHOR STUDS SHALL BE NELSON D2L GRANULAR FLUX-FILLED REBAR STUDS OR APPROVED EQUAL, AND SHALL BE MADE OF LOW CARBON COLD ROLLED STEEL WITH A MINIMUM TENSILE STRENGTH OF 80,000 PSI. STUD WELDING INSPECTION AND TESTING SHALL CONFORM TO AWS D1.1.
15. HOT DIP GALVANIZE IN ACCORDANCE WITH ASTM A123 AND ASTM A153 STRUCTURAL STEEL AND FASTENERS THAT ARE PERMANENTLY EXPOSED TO THE WEATHER. REPAIR GALVANIZING AFTER WELDING IN ACCORDANCE WITH ASTM A780.
16. THE FULL DESIGN AND LOAD CARRYING CAPACITY OF THE STEELWORK SHALL NOT BE IMPAIRED DUE TO FABRICATION, SHIPMENT, OR ERECTION PROCEDURES, THROUGHOUT THE COMPLETE PROCESS. THE STABILITY OF ALL INDIVIDUAL MEMBERS AND ASSEMBLIES SHALL BE MAINTAINED.
17. THE CONTRACTOR SHALL BE RESPONSIBLE FOR THE CONTROL OF ALL ERECTION PROCEDURES AND SEQUENCES WITH RELATION TO TEMPERATURE DIFFERENTIALS AND WELD SHRINKAGE.
18. ALL ADDITIONAL STEEL REQUIRED FOR ERECTION PURPOSES SHALL BE PROVIDED AT NO ADDITIONAL COST AND SHALL BE REMOVED UNLESS APPROVED BY THE OWNER'S REPRESENTATIVE IN WRITING.

SCOPE OF WORK

THE STRUCTURAL SCOPE OF WORK INCLUDES ADDITION OF CEILING FRAMING OVER EXISTING STAIRCASE, CEILING FRAMING OVER NEW RESTROOM AND AT ELEVATOR CORE. THE ADDITION OF NEW CEILING FRAMING DOES NOT ALTER THE SEISMIC BEHAVIOR OF THE EXISTING STRUCTURE AND THE IMPOSED SEISMIC MASS FROM CEILING FRAMING IS MINIMAL (LESS THAN 1%).

DESIGN LOADS

DESIGN IS BASED ON 2016 CALIFORNIA BUILDING CODE (2016 CBC).

CEILING LOADS:

LIVE LOAD: 20.0 PSF (FOR GRAVITY ONLY) CONSERVATIVE
DEAD LOAD: 6.0 PSF

SEISMIC FACTORS:
Ss = 2.462 S1 = 0.938
SITE CLASS D
Fa = 1.0 Fv = 1.5
SDS = 1.641 SD1 = 0.938
SEISMIC DESIGN CATEGORY E
OCCUPANCY CATEGORY II
STAIR WELL ENCLOSURE – α_p= 1.0 R_p = 2.5

WIND FACTORS:
NOT APPLICABLE

PLAN CHECK REVIEW SET - NOT FOR CONSTRUCTION

Orion Structural
ORION STRUCTURAL GROUP, INC.
223 East Thousand Oaks Boulevard, Suite 220
Thousand Oaks, CA 91360
Phone: (805)750-8136 Fax: (805)494-0418

DRAWING NOTES:
THE USER OF THESE PLANS AND SPECIFICATIONS SHALL BE RESTRICTED TO THE ORIGINAL SITE FOR WHICH THEY WERE PREPARED AND PUBLICATION THEREOF IS EXPRESSLY LIMITED TO SUCH USE. REPRODUCTION OR PUBLICATION BY ANY METHOD, IN WHOLE OR IN PART IS PROHIBITED. TITLE TO THESE PLANS AND SPECIFICATIONS REMAIN WITH ORION STRUCTURAL GROUP, INC. WITHOUT PREJUDICE. VISUAL CONTACT WITH THESE PLANS AND SPECIFICATIONS SHALL CONSTITUTE PRIMA FACIE EVIDENCE OF THE ACCEPTANCE OF THESE RESTRICTIONS.

DO NOT SCALE THESE DRAWINGS. REFER TO ARCHITECTURAL PLANS FOR ALL WRITTEN DIMENSIONS AND ELEVATIONS.

THE GENERAL CONTRACTOR SHALL VERIFY AND BE RESPONSIBLE FOR ALL DIMENSIONS AND EXISTING CONDITIONS ON THE JOB AND SHALL REPORT ANY DISCREPANCIES TO THE ENGINEER AND THE ARCHITECT FOR RESOLUTION PRIOR TO COMMENCING WITH THE WORK IN QUESTION.

REGISTERED PROFESSIONAL ENGINEER
WILL A. LANGE
No. 5430
Exp. 06/30/2020
STRUCTURAL
STATE OF CALIFORNIA

SIGN DATE: 08/14/2019

COMMERCIAL OFFICES TENANT IMPROVEMENT

250 SOUTH MILLS ROAD, VENTURA, CA 93003

REVISIONS	
	B&S SUB.-1 08/14/2019

DRAWN BY:	DF / MH
PROJECT MANAGER:	DF / WL
PROJECT NUMBER:	18023
DATE:	08/14/2019
DRAWING SCALE:	PER SHEET

S0.0
GENERAL NOTES

STATEMENT OF SPECIAL INSPECTION

1. THE OWNER SHALL EMPLOY ALL SPECIAL INSPECTOR REQUIRED FOR THIS PROJECT PER SECTION 1704 OF THE 2016 CALIFORNIA BUILDING CODE (CBC).
2. THE INSPECTOR SHALL BE A QUALIFIED PERSON WHO SHALL BE APPROVED BY THE CITY PRIOR TO CONDUCTING ANY INSPECTION.
3. THE INSPECTOR SHALL FURNISH INSPECTION REPORTS TO THE OWNER, THE CONTRACTOR, THE CITY INSPECTOR AND THE ENGINEER OF RECORD.
4. REPORTS SHALL INDICATE THAT THE WORK INSPECTED WAS DONE IN CONFORMANCE TO THE APPROVED CONSTRUCTION DOCUMENTS. ANY DISCREPANCIES SHALL BE BROUGHT TO THE IMMEDIATE ATTENTION OF THE CONTRACTOR FOR CORRECTION. IF THE DISCREPANCIES ARE NOT CORRECTED, THE DISCREPANCIES SHALL BE BROUGHT TO THE ATTENTION OF THE BUILDING OFFICIAL AND THE ENGINEER OF RECORD PRIOR TO THE COMPLETION OF THAT PHASE OF THE WORK.
5. A FINAL REPORT DOCUMENTING SHALL BE ISSUED BY EACH SPECIAL INSPECTOR AT THE COMPLETION OF EACH PHASE OF INSPECTION, WHICH SHALL SUMMARIZE ALL INSPECTION CONDUCTED DURING THAT PHASE OF WORK AND NOTE ALL DISCREPANCIES AS RESOLVED OR INCOMPLETE. THIS REPORT SHALL BE PROVIDED TO THE OWNER, THE CONTRACTOR, THE BUILDING OFFICIAL AND THE ENGINEER OF RECORD.
6. THE FOLLOWING ITEMS SHALL REQUIRE SPECIAL INSPECTION:
   - A. ALL WELDING OF STEEL. (CONTINUOS INSPECTION PER AWS D1.1)
   - B. SHEAR PLYWOOD NAILING LESS THAN 4" O.C. (PERIODIC INSPECTION SHALL BE CONDUCTED BY THE ENGINEER OF RECORD)
   - C. STRONG WALL ANCHOR BOLT INSTALLATION AT THE FOUNDATION (CONTINUOS INSPECTION)
   - D. COMPONENTS OF THE SEISMIC FORCE RESISTING SYSTEM: (PERIODIC INSPECTION SHALL BE COVERED BY THE ENGINEER OF RECORD DURING STRUCTURAL OBSERVATION):
     - HOLDOWN(S) AND ANCHOR BOLT(S)
     - SHEAR WALL CONSTRUCTION
     - DRAG BEAM(S) AND CONNECTION(S)
     - ROOF AND FLOOR DIAPHRAGM CONSTRUCTION.
   - E. ALL STRUCTURAL CONCRETE WORK USING CONCRETE COMPRESSIVE STRENGTH (f'c) GREATER THAN 2500 PSI
7. EACH CONTRACTOR RESPONSIBLE FOR CONSTRUCTION OF A SEISMIC-FORCE RESISTING SYSTEM, DESIGNATED SEISMIC SYSTEM OR SEISMIC-RESISTING COMPONENT LISTED IN THIS STATEMENT OF SPECIAL INSPECTION SHALL SUBMIT A WRITTEN STATEMENT OF RESPONSIBILITY TO THE BUILDING OFFICIAL AND THE OWNER PRIOR TO THE COMMENCEMENT OF WORK ON THE SYSTEM OR COMPONENT PER SECTION 1709 OF 2016 CBC. THE CONTRACTOR'S STATEMENT OF RESPONSIBILITY SHALL CONTAIN ACKNOWLEDGMENT OF AWARENESS OF THE SPECIAL REQUIREMENTS CONTAINED IN THIS STATEMENT OF SPECIAL INSPECTION.

STRUCTURAL OBSERVATION NOTE

1. THE OWNER SHALL EMPLOY THE ENGINEER OR ARCHITECT REGISTERED / LICENSED IN THE STATE OF CALIFORNIA WHO IS RESPONSIBLE FOR THE STRUCTURAL DESIGN TO DO STRUCTURAL OBSERVATIONS.
2. THE ENGINEER OF RECORD IS ORION STRUCTURAL GROUP, INC, WILL LAMBERT, SE 5430.
3. THE ENGINEER OF RECORD DESIGNATES WILL LAMBERT (ORION STRUCTURAL GROUP, INC.) SHALL PERFORM THE STRUCTURAL OBSERVATIONS.
4. THE ENGINEER RESPONSIBLE FOR THE STRUCTURAL OBSERVATIONS AND THE CONTRACTOR AND ALL APPROPRIATE SUBCONTRACTORS SHALL HOLD A PRE-CONSTRUCTION MEETING TO REVIEW THE DETAILS OF THE STRUCTURAL SYSTEM TO BE STRUCTURAL OBSERVED.

   ELEMENTS TO BE OBSERVED

   FOUNDATION
   THE FOLLOWING ITEMS SHALL BE OBSERVED BY THE STRUCTURAL OBSERVER PRIOR TO PLACEMENT OF CONCRETE;
   - SLABS, RETAINING WALLS, GRADE BEAMS AND FOOTING REINFORCEMENT.
   - ANCHOR BOLTS AT GRADE BEAMS.

   HORIZONTAL DIAPHRAGM
   THE FOLLOWING ITEMS SHALL BE OBSERVED BY THE STRUCTURAL OBSERVER PRIOR TO COVERING THE FLOOR DIAPHRAGM OR THE FLOOR DIAPHRAGM;
   - METAL DECK AT MEZZANINE LEVEL.
   - PLYWOOD SHEATHING AT MEZZANINE LEVEL.

   FRAMING
   THE FOLLOWING ITEMS SHALL BE OBSERVED BY THE STRUCTURAL OBSERVER PRIOR TO RAPING THE EXTERIOR OF THE STRUCTURE;
   - CONNECTIONS AT STEEL MOMENT FRAME.
   - CONNECTIONS AT STEEL FRAMING.

   FINAL OBSERVATION
   THE FOLLOWING ITEMS SHALL BE OBSERVED BY THE STRUCTURAL OBSERVER PRIOR TO COVERING STRUCTURAL FRAMING;
   - ALL OBSERVED DEFICIENCIES FROM PRIOR OBSERVATIONS SHALL BE OBSERVED FOR COMPLETENESS.
5. THE DESIGNATED STRUCTURAL OBSERVER SHALL SUBMIT REPORTS USING THE BUILDING AND SAFETY PRESCRIBED FORM.
6. DURING THE COURSE OF CONSTRUCTION, THE ENGINEER / ARCHITECT SHALL VISUALLY REVIEW THE STRUCTURAL SYSTEM FOR GENERAL CONFORMANCE WITH THE APPROVED PLANS. ANY OBSERVED DEFICIENCIES SHALL BE REPORTED IN WRITING, TO THE OWNER'S REPRESENTATIVE, TO CONTRACTOR AND THE BUILDING DEPARTMENT.
7. SEPARATE OBSERVATIONS AND REPORTS ARE REQUIRED FOR EACH ELEMENT OF THE STRUCTURAL OBSERVATION PROGRAM. THE ELEMENT OBSERVATION REPORTS MUST BE RECEIVED BY BUILDING AND SAFETY BEFORE THE BUILDING AND SAFETY INSPECTION OF THAT ELEMENT.
8. PRIOR TO COVERING THE WORK, THE STRUCTURAL SYSTEM SHALL BE INSPECTED AND APPROVED BY BUILDING AND SAFETY INSPECTION STAFF ASSIGNED TO THE PROJECT. SUCH APPROVAL BY THE DEPARTMENT IS REQUIRED PRIOR TO COVERING. THE ENGINEER / ARCHITECT PERFORMING THE STRUCTURAL OBSERVATION IN NOT AUTHORIZED TO APPROVE THE COVERING OF THE STRUCTURAL SYSTEM. HIS / HER STRUCTURAL OBSERVATIONS ARE ADVISORY ONLY AND THEY DO NOT IN ANY WAY BIND THE DEPARTMENT OR CONSTITUTE A CERTIFICATION THAT THE STRUCTURAL SYSTEM WILL PASS BUILDING AND SAFETY DEPARTMENT INSPECTION. NOR DO THEY SUBSTITUTE FOR ANY REQUIRED DIVISION OF BUILDING AND SAFETY INSPECTION.

LIGHT GAUGE METAL

1. FOR NON-LOAD BEARING METAL STUDS AND CEILINGS SEE ARCHITECTURAL DRAWINGS AND SPECIFICATIONS. FOLLOWING NOTES APPLY TO METAL STUDS INDICATED ON STRUCTURAL DRAWINGS.
2. ALL LIGHT GAUGE METAL FRAMING CONSTRUCTION SHALL BE IN ACCORDANCE WITH AISI "SPECIFICATIONS FOR DESIGN OF COLD FORMED STEEL STRUCTURAL MEMBERS" 2007 EDITION.
3. ALL LIGHT GAUGE METAL FRAMING SHALL BE AS NOTED BELOW:
   - INTERIOR AND EXTERIOR STUDS: GALVANIZED CONFORMING TO ASTM A123 COATING CLASS G60.
4. ALL LIGHT GAUGE METAL FRAMING SHALL CONFORM WITH THE FOLLOWING:
   - GALVANIZED STUDS, JOISTS, TRACKS, END CLOSURES, BRIDGING, ACCESSORIES AND STRAPS (12 (97), 14 (68) AND 16 (54) GAUGE): ASTM A653, GRADE 50, (Fy_min. = 50,000 psi, Fu_min.=65,000 psi)
   - GALVANIZED STUDS, JOISTS, TRACKS, END CLOSURES, BRIDGING, ACCESSORIES AND STRAPS (18 (43) AND 20 (33) GAUGE): ASTM A653, GRADE 33, (Fy_min.= 33,000 psi, Fu_min.=45,000 psi)
   - GALVANIZED BACKING PLATES: ASTM A653, GRADE 50, (Fy_min.= 50,000 psi, Fu_min.=65,000 psi)
5. DOUBLE VERTICAL STUDS SHALL BE STITCH WELDED TOGETHER ON BOTH FLANGES WITH 1/16" GROOVE WELDS X 1" LONG AT 12" ON CENTER, UNO ON DRAWINGS.
6. TOP AND BOTTOM STUD TRACKS FOR INTERIOR PARTITIONS SHALL BE 16 GA. MATERIAL WITH 1.5" FLANGES, UNO ON DRAWINGS.
7. TOP STUDS TRACKS FOR EXTERIOR WALLS SHALL BE 16 GA MATERIAL WITH 1.5" FLANGES: BOTTOM STUD TRACKS FOR EXTERIOR WALLS SHALL BE 16 GA MATERIAL WITH 1.5" FLANGES, UNO ON DRAWINGS.
8. DEEP LEG TRACK FOR EXTERIOR WALLS SHALL BE 16GA MATERIAL WITH 2" FLANGES, UNO ON DRAWINGS.
9. DOUBLE JOIST ARE BACK TO BACK U.N.O.
10. ALL LIGHT GAUGE FRAMING MEMBERS SHALL BE CLARKDIETRICH PER LA CITY RR 25889.
11. SUBMIT SHOP DRAWINGS FOR REVIEW.
12. ALL METAL STUDS AND JOISTS SHALL HAVE STIFFENED FLANGES. SEE DRAWINGS FOR DETAILS ON CONNECTIONS, BRACING, BRIDGING, ETC.
13. CUT FRAMING COMPONENTS, SUCH AS BRACING, SQUARELY OR AT AN ANGLE TO FIT TIGHT AGAINST ABUTTING MEMBERS. HOLD MEMBERS FIRMLY IN POSITION UNTIL PROPERLY FASTENED.
14. ALL BEARING STUDS MUST BE FULLY ATTACHED TO THE WALL LEDGER. ALL STUDS SHALL BE SPACED AT SAME SPACING AS JOIST (IN LINE FRAMING). ALL BEARING STUDS, COLUMNS AND BUILT UP STUDS SHALL HAVE CONTINUOUS BEARING DOWN TO FOUNDATION U.N.O. SOLID BLOCKING AT FLOORS SHALL BE PROVIDED.
15. CUTTING FLANGES AND STIFFENER LIPS OF LOAD BEARING STUDS IS PROHIBITED, NO STUD NOTCHING IS PERMITTED IN BEARING WALLS U.N.O.
16. OPENING IN STUD/JOIST WEBS OTHER THAN THE STANDARD PUNCHOUTS BY MANUFACTURER ARE PROHIBITED UNLESS SPECIFICALLY DESIGNED AND DETAILED BY ENGINEER. NO PUNCHOUT SHALL BE ALLOWED WITHIN 24" OF THE SUPPORT OR POINT LOAD.
17. BRIDGING SHALL BE PROVIDED FOR ALL JOISTS @ 8'-0" O.C.MAX.
18. ATTACH STUDS USING PLUG, BUTT OR SEAM WELDS, UNLESS NOTED OTHERWISE. WHERE STUDS ARE BURNED THROUGH BY WELDING, PROVIDE SUITABLE STITCH PLATE OF SAME GAUGE. SPLICES IN AXIAL LOADED STUDS OR BRACES ARE NOT PERMITTED. PROVIDE BUTT WELDS OR SPLICES AT JOINTS IN TRACK. WIRE TYING OF FRAMING COMPONENTS IS NOT PERMITTED.
19. PREFABRICATED PANELS SHALL BE SQUARED AND BRACED TO AVOID RACKING. LIFT PREFABRICATED PANELS IN A MANNER SO AS NOT TO CAUSE LOCAL DISTORTION OF ANY MEMBER.
20. ALL SHEET METAL SCREWS SHALL EXTEND THROUGH METAL FRAMING AND STRUCT. STEEL A MINIMUM OF ¼" OR 3 EXPOSED THREADS WHICHEVER IS GREATER.
21. ALL LIGHT METAL GAUGE TO METAL FASTENERS INDICATED ON THESE DRAWINGS ARE QUICK DRIVE COLD FORMED SELF-DRILLING/SELF-TAPPING STEEL SCREWS AS MANUFACTURED BY SIMPSON STRONG-TIE (LARR 25670). SCREWS SHALL HAVE A MINIMUM EDGE DISTANCE OF ⅜" FASTENERS SHALL BE AS FOLLOWS:

APPLICATION	FASTENER
LIGHT GAUGE TRACK TO STUD	18 GA. OR 20 GA.-#8 MODIFIED TRUSS HEAD
ALL OTHER LIGHT GAUGE METAL TO LIGHT GAUGE METAL CONNECTION	16 GA.-#10 PANCAKE HEAD 18 GA. OR 20 GA.-#8 WASHER HEAD 16 GA.-#10 HEX WASHER HEAD

22. ALL LIGHT GAUGE METAL TO STRUCTURAL STEEL FASTENERS SHALL BE HILTI X-AL-H POWER DRIVEN FASTENER (LARR 25646, ICC ESR-1663):

APPLICATION	FASTENER SHANK DIA
STRUCTURAL STEEL THICKNESS <= 1"	0.145"
1" < STRUCTURAL STEEL THICKNESS < 1.5"	0.158"
1.5" <=STRUCTURAL STEEL THICKNESS	0.177"

23. THE CONTRACTOR IS PROHIBITED FROM USING TORCHES TO BURN HOLES IN TRACKS OR STUDS

GENERAL STRUCTURAL NOTES

1. THE CONTRACTOR SHALL VERIFY ALL DIMENSIONS & CONDITIONS AT THE JOB SITE PRIOR TO STARTING CONSTRUCTION AND THE ARCHITECT/ENGINEER SHALL BE NOTIFIED OF ANY DISCREPANCIES OR INCONSISTENCIES.
2. ALL PHASES OF WORK SHALL CONFORM TO THE MINIMUM STANDARDS OF THE LATEST ADOPTED CODE AND ALL RELEASED ADDENDUM.
3. THE CONTRACT CONSTRUCTION DRAWINGS AND SPECIFICATIONS REPRESENT THE FINISHED STRUCTURE. UNLESS OTHERWISE NOTED, THEY DO NOT INDICATE THE METHOD OF CONSTRUCTION. THE CONTRACTOR SHALL PROVIDE ALL MEASURES NECESSARY TO PROTECT THE STRUCTURE, WORKMEN, AND OTHER PERSONS DURING CONSTRUCTION. SUCH MEASURES SHALL INCLUDE, BUT NOT LIMITED TO: BRACING, ALL SHORING, FORMS, AND SCAFFOLDING.
4. OPENINGS, POCKETS, ETC. SHALL NOT BE PLACED IN SLABS BEAMS, COLUMNS, WALLS, ETC., UNLESS SPECIFICALLY DETAILED ON THE STRUCTURAL DRAWINGS.
5. ALL ASTM SPECIFICATIONS NOTED ON THESE DRAWINGS SHALL BE OF THE LATEST REVISION.
6. CONTINUOUS INSPECTION BY A REGISTERED DEPUTY INSPECTOR APPROVED BY THE ARCHITECT AND/OR ENGINEER AND THE BUILDING DEPARTMENT SHALL BE EMPLOYED BY THE CONTRACTOR FOR THE FOLLOWING TYPES OF WORK:
   - A. ALL CONCRETE WORK ABOVE GRADE INVOLVING CONCRETE STRENGTH GREATER THAN 2500 P.S.I.
   - B. FOUNDATION CONCRETE INVOLVING CONCRETE STRENGTH GREATER THAN 2500 P.S.I.
   - C. ALL EPOXY & EXPANSION ANCHORS.
   - D. ALL MASONRY GROUTING.
   - E. SEE 2016 CBC SECTION 1704, 1706 AND 1707 FOR ADDITIONAL REQUIREMENTS.
7. IN THE EVENT THAT CERTAIN FEATURES OF CONSTRUCTION ARE NOT FULLY SHOWN ON THE DRAWINGS OR CALLED FOR IN THE NOTES OR SPECIFICATIONS. NOTIFY THE ARCHITECT/ENGINEER IMMEDIATELY & WAIT FOR INSTRUCTIONS.
8. COST OF ADDITIONAL DESIGN WORK NECESSITATED BY SELECTION OF AN OPTION OR DUE TO ERRORS OR OMISSIONS IN CONSTRUCTION, SHALL BE BORN BY THE CONTRACTOR.
9. AS A CONVENIENCE TO THE CONTRACTOR, ENGINEER SHALL REVIEW REQUIRED SHOP DRAWINGS AS TO THERE GENERAL CONFORMANCE TO THE DESIGN CONCEPT. CONTRACTOR SHALL BE RESPONSIBLE, NONETHELESS, FOR COMPLIANCE AND DIMENSIONS AND SHALL SUBMIT SHOP DRAWINGS IF APPLICABLE, FOR THE FOLLOWING:
   - A. STRUCTURAL STEEL AND TAPERED STEEL GIRDERS, INCLUDING ERECTION BRACING
   - B. SUCH OTHER ITEMS AS MAY BE REQUIRED ON PLANS. CONTRACTOR SHALL SUBMIT SHOP DRAWINGS AND COMPLIANCE CERTIFICATES TO THE BUILDING DEPARTMENT WHEN REQUIRED.
10. WHERE SOIL REPORT IS CITED, ITS REQUIREMENTS ADOPTED HEREIN.
11. ALL MANUFACTURED PRODUCTS MUST BE INSTALLED PER MANUFACTURER'S RECOMMENDATION.
12. THE CONTRACTOR ACKNOWLEDGES AND UNDERSTANDS THAT THE CONTRACT DOCUMENTS MAY REPRESENT IMPERFECT DATA AND MAY CONTAIN ERRORS, OMISSIONS, CONFLICTS, INCONSISTENCIES, CODE VIOLATIONS AND IMPROPER USE OF MATERIALS. SUCH DEFICIENCIES WILL BE CORRECTED WHEN IDENTIFIED. THE CONTRACTOR AGREES TO CAREFULLY STUDY AND COMPARE THE INDIVIDUAL CONTRACT DOCUMENTS AND REPORT AT ONCE IN WRITING TO THE OWNER ANY DEFICIENCIES THE CONTRACTOR MAY DISCOVER. THE CONTRACTOR FURTHER AGREES TO REQUIRE EACH SUBCONTRACTOR TO LIKEWISE STUDY THE DOCUMENTS AND TO REPORT AT ONCE ANY DEFICIENCIES DISCOVERED. THE CONTRACTOR SHALL RESOLVE ALL REPORTED DEFICIENCIES WITH CONSULTANT PRIOR TO AWARDING ANY SUBCONTRACTS OR STARTING ANY WORK WITH THE CONTRACTOR'S OWN EMPLOYEES. IF THE CONTRACTOR WITHOUT ADDITIONAL TIME OR ADDITIONAL EXPENSE CANNOT RESOLVE ANY DEFICIENCIES, THE CONTRACTOR SHALL SO INFORM THE OWNER IN WRITING. ANY WORK PERFORMED PRIOR TO RECEIPT OF INSTRUCTIONS FROM THE OWNER WILL BE DONE AT THE CONTRACTOR'S RISK.
13. OPTIONS, IF PROVIDED HEREIN, ARE FOR CONTRACTOR'S CONVENIENCE. HE SHALL BE RESPONSIBLE FOR ALL CHANGES NECESSARY, SHALL COORDINATE ALL DETAILS, AND SHALL OBTAIN ALL REQUIRED APPROVALS.
14. ALL WORK SHALL CONFORM TO THE 2016 CALIFORNIA BUILDING CODE (2016 CBC).

MECHANICAL & ADHESIVE ANCHORS

1. ADHESIVE (EPOXY) ANCHORS AND DOWELS INSTALLED INTO CONCRETE:
   - A. "PURE110+" BY DeWALT (COLA RR# 26035, ESR#3298)
   - B. "SET-XP" BY SIMPSON STRONG TIE (COLA RR#25744, ESR#2508)
   - C. "HIT-RE 500-V3" BY HILTI, INC. (COLA RR#26028, ESR#3814)
2. ADHESIVE (EPOXY) ANCHORS AND DOWELS INSTALLED INTO GROUT-FILLED MASONRY UNITS:
   - A. "AC100+GOLD" BY DeWALT (COLA RR# 26049, ESR# 3200)
   - B. "SET-XP" BY SIMPSON STRONG TIE (COLA RR#25965, IAPMO#265)
   - C. HILTI HY-70 (ICC ESR-2682, LARR#25980)
3. EXPANSION / MECHANICAL ANCHORS INSTALLED INTO CONCRETE:
   - A. "POWER-STUD+SD2" BY DeWALT (COLA RR#25831, ESR#2502)
   - B. "STRONG BOLT2" BY SIMPSON STRONG-TIE (COLA RR#25891, ESR#3037)
   - C. "KWIK BOLT TZ" BY HILTI, INC. (COLA RR#25701, ESR#1917)
5. EXPANSION / MECHANICAL ANCHORS INSTALLED INTO GROUT-FILLED MASONRY UNITS:
   - A. "STRONG BOLT 2" BY SIMPSON STRONG-TIE (COLA RR#25936, IAPMO#240)
6. ADHESIVE ANCHORS: ASTM A36 (OR F1554 GRADE 36) THREADED RODS WITH ASTM A 563 GRADE A NUTS AND ANSI B18.22.1 TYPE A WASHERS, UNLESS OTHERWISE NOTED.
7. ADHESIVE DOWELS: ASTM A615 GRADE 60 REINFORCING STEEL.
8. ALL ANCHORS SHALL BE INSTALLED IN ACCORDANCE WITH ICC-ES REPORT AND COLA REPORT AND MANUFACTURERS RECOMMENDATIONS.
9. UNLESS OTHERWISE NOTED, PROVIDE MINIMUM EMBEDMENT OF ANCHORS PER ICC-ES REPORT, COLA REPORTS & MANUFACTURERS RECOMMENDATIONS.
10. CONFIRM FINAL ANCHOR LOCATIONS PRIOR TO FABRICATING PLATES, MEMBERS, OR OTHER STEEL ASSEMBLIES ATTACHED WITH MECHANICAL OR ADHESIVE ANCHORS. AT CONTRACTOR OPTION, OVERSIZED HOLES AND WELDED PLATE WASHERS CAN BE USED IN LIEU OF STANDARD DIAMETER HOLES. SIZE & WELD
11. PRIOR TO ALL DRILLING OR CORING, THE CONTRACTOR SHALL (1) VERIFY THE EXISTING CONCRETE OR MASONRY THICKNESS TO PREVENT DAMAGE TO THE OPPOSITE FACE OF CONCRETE AND MAINTAIN 1-1/2" CLEAR COVER U.N.O., AND (2) IDENTIFY EXISTING REINFORCING LOCATIONS BY PACHOMETER, PROBING, CHIPPING, ETC. TO AVOID DAMAGE EXISTING REINFORCING.
12. IF REINFORCEMENT IS ENCOUNTERED DURING DRILLING, ABANDON AND SHIFT THE HOLE LOCATION TO AVOID THE REINFORCEMENT. PROVIDE A MINIMUM OF 2 ANCHOR DIAMETERS OR 1 INCH, WHICHEVER IS LARGER, OF SOUND CONCRETE BETWEEN THE DOWEL AND THE ABANDONED HOLE. FILL THE ABANDONED HOLE WITH NON-SHRINK GROUT. IF THE ANCHOR OR DOWEL MAY NOT BE SHIFTED AS NOTED ABOVE, THE ENGINEER WILL DETERMINE A NEW LOCATION.
13. TEST ANCHORS NO SOONER THAN 24 HOURS AFTER INSTALLATION.
14. ADHESIVE ANCHORS SHALL BE INSTALLED IN CONCRETE OR GROUT HAVING A MINIMUM AGE OF 21 DAYS AT THE TIME OF ANCHOR INSTALLATION.
15. FOR EXTERIOR AND FOR EXPOSED APPLICATIONS PROVIDE HOT DIP GALVANIZED OR STAINLESS STEEL ANCHORS.

Orion Structural
ORION STRUCTURAL GROUP, INC.
222 East Thousand Oaks Boulevard, Suite 220
Thousand Oaks, CA 91360
Phone: (805)750-8136 Fax: (805)494-0418

DRAWING NOTES:
THE USER OF THESE PLANS AND SPECIFICATIONS SHALL BE RESTRICTED TO THE ORIGINAL SITE FOR WHICH THEY WERE PREPARED AND PUBLICATION THEREOF IS EXPRESSLY LIMITED TO SUCH USE. REPRODUCTION OR PUBLICATION BY ANY METHOD, IN WHOLE OR IN PART IS PROHIBITED. TITLE TO THESE PLANS AND SPECIFICATIONS REMAIN WITH ORION STRUCTURAL GROUP, INC. WITHOUT PREJUDICE. VISUAL CONTACT WITH THESE PLANS AND SPECIFICATIONS SHALL CONSTITUTE PRIMA FACIE EVIDENCE OF THE ACCEPTANCE OF THESE RESTRICTIONS.

DO NOT SCALE THESE DRAWINGS. REFER TO ARCHITECTURAL PLANS FOR ALL WRITTEN DIMENSIONS AND ELEVATIONS.

THE GENERAL CONTRACTOR SHALL VERIFY AND BE RESPONSIBLE FOR ALL DIMENSIONS AND EXISTING CONDITIONS ON THE JOB AND SHALL REPORT ANY DISCREPANCIES TO THE ENGINEER AND THE ARCHITECT FOR RESOLUTION PRIOR TO COMMENCING WITH THE WORK IN QUESTION.

REGISTERED PROFESSIONAL ENGINEER
WILL A. LAMBERT
No. 5430
Exp. 06/30/2020
STRUCTURAL
STATE OF CALIFORNIA

SIGN DATE: 08/14/2019

COMMERCIAL OFFICES
TENANT IMPROVEMENT

250 SOUTH MILLS ROAD, VENTURA, CA 93003

REVISIONS	
	B&S SUB.-1 08/14/2019

DRAWN BY:	DF / MH
PROJECT MANAGER:	DF / WL
PROJECT NUMBER:	18023
DATE:	08/14/2019
DRAWING SCALE:	PER SHEET

S0.1

GENERAL NOTES

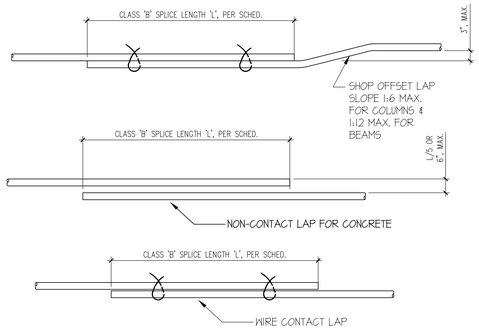

MIN. 2 WIRE TIES AT ALL SPLICES PROJECTING FROM FOOTINGS TYP.

BAR DEVELOPMENT LENGTH (Ld) SCHEDULE

BAR SIZE	Fc' = 2500 psi		Fc' = 3000 psi		Fc' = 4000 psi		Fc' = 4500 psi	
	TOP BARS	OTHER BARS	TOP BARS	OTHER BARS	TOP BARS	OTHER BARS	TOP BARS	OTHER BARS
#3	24"	18"	22"	17"	19"	15"	18"	15"
#4	32"	24"	29"	22"	25"	19"	24"	21"
#5	39"	30"	36"	28"	31"	24"	30"	23"
#6	47"	36"	43"	33"	37"	29"	35"	27"
#7	69"	53"	63"	48"	54"	42"	51"	40"
#8	78"	60"	72"	55"	62"	48"	59"	45"
#9	88"	68"	81"	62"	70"	54"	66"	51"
#10	98"	75"	90"	69"	78"	60"	73"	56"
#11	108"	83"	98"	76"	85"	66"	80"	62"

CLASS 'B' SPLICE LENGTH

BAR SIZE	Fc' = 2500 psi		Fc' = 3000 psi		Fc' = 4000 psi		Fc' = 4500 psi	
	TOP BARS	OTHER BARS	TOP BARS	OTHER BARS	TOP BARS	OTHER BARS	TOP BARS	OTHER BARS
#3	31"	24"	28"	22"	25"	20"	23"	20"
#4	41"	32"	38"	29"	33"	25"	31"	24"
#5	51"	39"	47"	36"	41"	31"	38"	30"
#6	61"	47"	56"	43"	49"	37"	46"	35"
#7	89"	69"	81"	63"	71"	54"	67"	51"
#8	102"	78"	93"	72"	81"	62"	76"	59"
#9	115"	88"	105"	81"	91"	70"	86"	66"
#10	127"	98"	116"	90"	101"	78"	95"	73"
#11	140"	108"	128"	99"	111"	85"	104"	80"

NOTES:

1. MINIMUM SPLICE LENGTH FOR BARS WITH CLASS 'B' SPLICE PER ACI-318-11, SECTION 12.2.
2. TOP BARS ARE HORIZONTAL BARS WITH MORE THAN 12" CONCRETE CAST IN THE MEMBER BOLOW THE REINFORCEMENT.
3. THESE BAR DEVELOPMENT LENGTH APPLY TO REGULAR OR NORMAL WEIGHT CONCRETE, MULTIPLY THE SPECIFIED DEVELOPMENT LENGTH BY 1.33 FOR LIGHT WEIGHT CONCRETE.
4. ALL DETAILING OF REINFORCEMENT SHALL COMPLY WITH THESE SCHEDULES UNLESS SPECIFICALLY DETAILED ON THE DRAWINGS.

TYP. REINF. DEVELOPMENT LENGTH SCHEDULE — NOT TO SCALE — T8

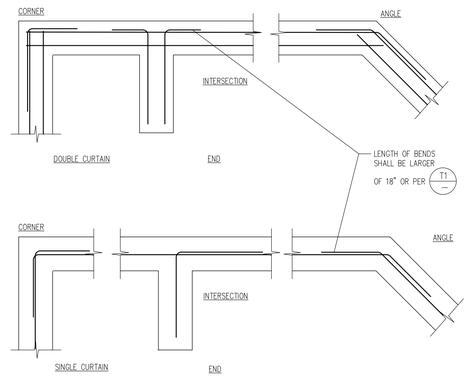

TYPICAL REINFORCING AT INTERSECTIONS — NOT TO SCALE — T4

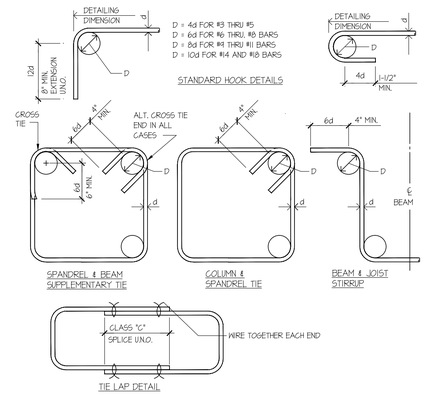

TYPICAL STANDARD HOOK DETAIL — NOT TO SCALE — T1

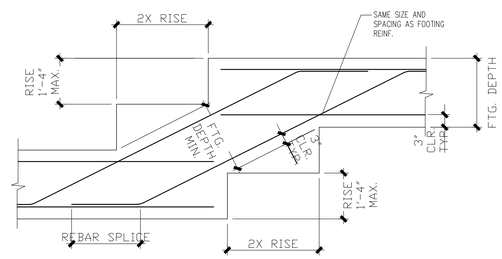

TYPICAL STEPPED FOOTING — NOT TO SCALE — T5

BAR DEVELOPMENT LENGTH (Ld) SCHEDULE

	BAR SIZE	Fc' = 2500 psi		Fc' = 3000 psi		Fc' = 4000 psi			
		TOP BARS	OTHER BARS	TOP BARS	OTHER BARS	TOP BARS	OTHER BARS		
40 KSI MIN.	#3	16"	12"	15"	11"	13"	10"		
60 KSI MIN.	#4	21"	16"	19"	15"	17"	13"		
	#5	39"	30"	36"	28"	31"	24"		
	#6	47"	36"	43"	33"	37"	29"		
	#7	68"	42"	63"	39"	54"	34"		
	#8	78"	48"	72"	44"	62"	38"		
	#9	88"	54"	81"	50"	70"	43"		
	#10	98"	60"	89"	55"	77"	48"		
	#11	107"	66"	98"	60"	85"	53"		

NOTES:

1. MINIMUM SPLICE LENGTH FOR BARS "CLASS B" SPLICE PER ACI-318-11, SECTION 12.2.
2. TOP BARS ARE HORIZONTAL BARS WITH MORE THAN 12" CONCRETE CAST IN THE MEMBER BELOW THE REINFORCEMENT.
3. THESE BAR DEVELOPMENT LENGTH APPLY TO REGULAR OR NORMAL WEIGHT CONCRETE, MULTIPLY THE SPECIFIED DEVELOPMENT LENGTH BY 1.33 FOR LIGHT WEIGHT CONCRETE.
4. ALL DETAILING OF REINFORCEMENT SHALL COMPLY WITH THESE SCHEDULE UNLESS SPECIFICALLY DETAILED ON THE DRAWINGS.
4. #3 BARS MAY BE 40 KSI, #4 BARS AND GREATER TO BE 60 KSI.

TYP. REINF. DEVELOPMENT LENGTH SCHEDULE — NOT TO SCALE — T2

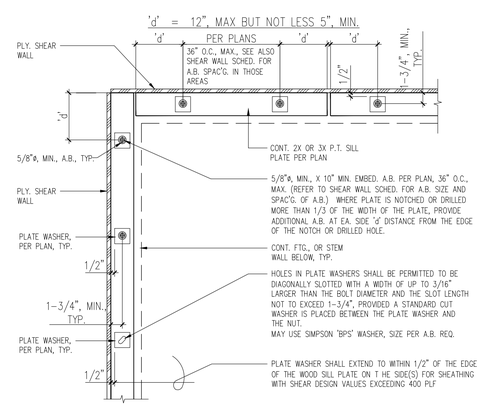

TYPICAL ANCHOR BOLT LAYOUT — NOT TO SCALE — T6

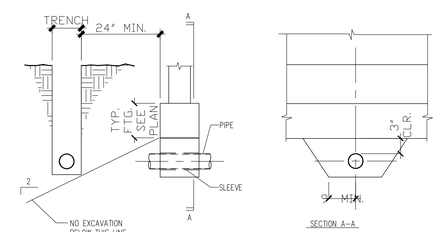

NOTES:

1. NO PIPE SHALL PASS THROUGH FOOTING.
2. PROVIDE SLEEVE MIN. 1" ø LARGER THAN PIPE.
3. PLACE ANY CONC. FILL PRIOR TO POURING FOOTING PAD. MAKE FILL SAME WIDTH AS FOOTING & FULL DEPTH OF PIPING TRENCH.

TYPICAL TIES THROUGH FOOTING — NOT TO SCALE — T3

- NOT TO SCALE — T10

- NOT TO SCALE — T11

- NOT TO SCALE — T12

- NOT TO SCALE — T9

Orion Structural
ORION STRUCTURAL GROUP, INC.
223 East Thousand Oaks Boulevard, Suite 220
Thousand Oaks, CA 91360
Phone: (805)730-8336 Fax: (805)494-0418

DRAWING NOTES:
THE USER OF THESE PLANS AND SPECIFICATIONS SHALL BE RESTRICTED TO THE ORIGINAL SITE FOR WHICH THEY WERE PREPARED AND PUBLICATION THEREOF IS EXPRESSLY LIMITED TO SUCH USE. REPRODUCTION OR PUBLICATION BY ANY METHOD, IN WHOLE OR IN PART IS PROHIBITED. TITLE TO THESE PLANS AND SPECIFICATIONS REMAIN WITH ORION STRUCTURAL GROUP, INC. WITHOUT PREJUDICE. VISUAL CONTACT WITH THESE PLANS AND SPECIFICATIONS SHALL CONSTITUTE PRIMA FACIE EVIDENCE OF THE ACCEPTANCE OF THESE RESTRICTIONS.

DO NOT SCALE THESE DRAWINGS. REFER TO ARCHITECTURAL PLANS FOR ALL WRITTEN DIMENSIONS AND ELEVATIONS.

THE GENERAL CONTRACTOR SHALL VERIFY AND BE RESPONSIBLE FOR ALL DIMENSIONS AND EXISTING CONDITIONS ON THE JOB AND SHALL REPORT ANY DISCREPANCIES TO THE ENGINEER AND THE ARCHITECT FOR RESOLUTION PRIOR TO COMMENCING WITH THE WORK IN QUESTION.

REGISTERED PROFESSIONAL ENGINEER — WILL A. LAMPE — No. 5430 — Exp. 06/30/2020 — STRUCTURAL — STATE OF CALIFORNIA

SIGN DATE: 08/14/2019

COMMERCIAL OFFICES TENANT IMPROVEMENT

250 SOUTH MILLS ROAD, VENTURA, CA 93003

REVISIONS

	B&S SUB.-1 08/14/2019

DRAWN BY:	DF / MH
PROJECT MANAGER:	DF / WL
PROJECT NUMBER:	18023
DATE:	08/14/2019
DRAWING SCALE:	PER SHEET

S0.2

NON-BEARING STUD SCHED.				MIN. GROSS SECTION PROPERTIES		
MAX. WALL HT.	MIN. STUD SIZE	IDENTIFICATION	SPACING (O.C.)	A (IN^4)	S (IN^4)	I (IN^4)
13'-0" INTERIOR	4" x 20 GA. (6" & 8" STUDS FOR 6" & 8" WALLS)	4" x 20 GA. (6" & 8" STUDS FOR 6" & 8" WALLS)	24" O.C. MAX.	0.275	0.346	0.692
	4" x 16 GA. (WHERE REQ'D., SEE NOTE #4)	4" x 16 GA. (WHERE REQ'D., SEE NOTE #4)		0.443	0.533	1.098
13'-0" EXTERIOR	6" x 20 GA.	6" x 20 GA.	16" O.C.	0.344	0.598	1.793
	6" x 16 GA. (WHERE REQ'D., SEE NOTE #4)	6" x 16 GA. (WHERE REQ'D., SEE NOTE #4)		0.556	0.927	2.860

SHAFT WALL STUD SCHED.				MIN. GROSS SECTION PROPERTIES		
MAX. WALL HT.	MIN. STUD SIZE	IDENTIFICATION	SPACING (O.C.)	A (IN^4)	S (IN^4)	I (IN^4)
13'-0" INTERIOR	2 1/2" x 20 GA	2-1/2" CT STUD 20GA	24" O.C. MAX.	0.248	0.168	0.241

FURRING WALL STUD SCHED.				MIN. GROSS SECTION PROPERTIES		
UNBRACED HT.	MIN. STUD SIZE	IDENTIFICATION	SPACING (O.C.)	A (IN^4)	S (IN^4)	I (IN^4)
7'-0" INTERIOR	1 5/8" x 20 GA	162S125-33	24" O.C. MAX.	0.145	0.083	0.067
7'-0" INTERIOR	2 1/2" x 20 GA	250S125-33	24" O.C. MAX.	0.176	0.142	0.178

NOTES:
1. STUD SIZE BASED ON L/360 DEFLECTION LIMIT FOR EXTERIOR WALLS, L/240 FOR INTERIOR WALLS WITH NO ROCK OR MASONRY VENEER ATTACHED TO THE WALL.
2. STUD FLANGES ON BOTH SIDES OF THE WALL ARE CONTINUOUSLY ATTACHED TO GYPSUM BOARD, PLYWOOD, OR METAL SIDING. WHERE CONTINUOUS ATTACHMENT DOES NOT OCCUR, PROVIDE HORIZONTAL STRAPS PER TYP. STRAPPING DETAIL 130/30.6
3. MAX. WALL HEIGHT IS THE MAXIMUM VERTICAL SPAN OF THE STUD BETWEEN ATTACHMENTS TO STRUCTURE OR DIAGONAL BRACES.
4. USE 18GA MIN. STUDS AT ATTACHMENTS OF EQUIPMENT, CABINETS, TOILET PARTITIONS, & LOCKERS.

. NOT TO SCALE T22

NON-LOAD BEARING STUD WALL SCHEDULE NOT TO SCALE T16

. NOT TO SCALE T23

NOT TO SCALE T20

. NOT TO SCALE T17

- NOT TO SCALE T24

. NOT TO SCALE T21

. NOT TO SCALE T18

FASTENING SCHEDULE (CONT.)
2016 CBC, TABLE 2304.10.1

DESCRIPTION OF BLDG. ELEMENTS	NUMBER AND TYPE OF FASTENING	SPACING AND LOCATION
24. BUILT UP GIRDER AND BEAMS	20d COMMON (4"X0.192") 32" O.C. 3"X0.131 NAILS AT 24" O.C. (2)-20d COMMON (4"X0.192") (3)-3"X0.131 NAILS	FACE NAIL AT TOP AND BOTTOM STAGGERED ON OPPOSITE SIDES FACE NAIL AT ENDS AND AT EACH SPLICE.
25. 2" PLANKS	16d COMMON (3½"X0.162")	AT EACH BEARING
26. COLLAR TIE TO RAFTER	(3)-10d COMMON (3"X0.148") (4)-3"X0.131" NAILS	FACE NAILING
27. JACK RAFTER TO HIP	(3)-10d COMMON (3"X0.148") (4)-3"X0.131" NAILS (2)-16d COMMON (3½"X0.162") (3)-3"X0.131 NAILS	TOE NAIL FACE NAIL
28. ROOF RAFTER TO 2X RIDGE BEAM	2-16"d COMMON (3"X0.148") (4)-3"X0.131" (2)-16" COMMON (3½"X0.162) (3)-3"X0.131" NAILS	TOE NAIL FACE NAIL
29. JOIST TO BAND JOIST	16d COMMON (3½"X0.162") 4-3"X0.131" NAILS	FACE NAIL
30. LEDGER STRIP	(3)-16d COMMON (3½"X0.162") (4)-3"X0.131 NAILS	FACE NAIL
31. WOOD STRUCTURE PANELS AND PARTICLE-BOARD (b) SUBFLOOR, ROOF AND WALL SHEATHING (TO FRAMING)	½" AND LESS: 6d (c.l.) 2-3/8" X 0.13" NAIL (n) 19/32" TO ¾": 8d (d) OR 6d (e) 2-3/8" X 0.113" NAIL (p) ⅞" TO 1": 8d (c) 1-1/8" TO 1-1/4": 10d (d) OR 8d (d) ⅞" AND LESS: 6d (e) ⅞" TO 1": 8d (e) 1-1/8" TO 1-1/4": 10d (d) OR 8d (e)	
32. PANEL SIDING (TO FRAMING)	½" AND LESS: 6d (f) 5/8": 8d (f)	
33. FIBERBOARD SHEATHING (g)	½": NO. 11 GAGE ROOFING NAIL (h) 6d COMMON NAIL (2" X 0.113") 25/32": NO. 11 GAGE ROOFING NAIL (h) 8d COMMON NAIL (2-1/2" X 0.131")	
34. INTERIOR PANELING	1/4": 4d (j) 3/8": 6d (k)	

FOR SI: 1 INCH = 25.4 mm

(a) COMMON OR BOX NAILS ARE PERMITTED TO BE USED EXCEPT WHERE OTHERWISE STATED.
(b) NAILS SPACED AT 6 INCHES ON CENTER AT EDGES, 12" INCHES AT INTERMEDIATE SUPPORTS EXCEPT 6 INCHES AT SUPPORTS WHERE SPANS ARE 48 INCHES OR MORE. FOR NAILING OF WOOD STRUCTURAL PANELS AND PARTICLEBOARD DIAGRAMS AND SHEAR WALLS REFER TO SECTION 2305. NAILS FOR WALL SHEATHING ARE PERMITTED TO BE COMMON, BOX OR CASING.
(c) COMMON OR DEFORMED SHANK (6d – 2"X0.113"; 8d – 2½"X0.131"; 10d – 3"X0.148")
(d) COMMON (6d – 2"X0.113"; 8d – 2 1/2"X0.131"; 10d – 3"X0.148")
(e) DEFORMED SHANK (6d – 2"X0.113"; 8d–2½"X0.131"; 10d – 3"X0.148").
(f) CORROSION-RESISTANT SIDING (6d – 1⅞"X0.106"; 8d – 2⅜"X0.128") OR CASING (6d – 2" X 0.099"; 8d – 2½"X0.113") NAIL.
(g) FASTENERS SPACED 3 INCHES ON CENTER AT EXTERIOR EDGES AND 6 INCHES ON CENTER AT INTERMEDIATE SUPPORTS, WHEN USED AS STRUCTURAL SHEATHING. SPACING SHALL BE 6 INCHES ON CENTER ON THE EDGES AND 12 INCHES ON CENTER AT INTERMEDIATE SUPPORTS FOR NON-STRUCTURAL APPLICATIONS.
(h) CORROSION-RESISTANT ROOFING NAILS WITH 7/16 INCH DIAMETER HEAD AND 1-1/2 INCH LENGTH FOR ½" SHEATHING AND 1-3/4 INCH LENGTH FOR 25/32 INCH SHEATHING.
(i) CORROSION RESISTANT STAPLES WITH NORMAL 7/16 INCH CROWN AND 1 -1/8 INCH LENGTH FOR 1/2 INCH SHEATHING AND 1-1/2 INCH LENGTH FOR 25/32 INCH SHEATHING. PANEL SUPPORTS AT 16 INCHES (20 INCHES IF STRENGTH AXIS IN THE LONG DIRECTION OF THE PANEL, UNLESS OTHERWISE MARKED).
(j) CASING (1-1/2" X 0.080") OR FINISH (1-1/2" X 0.072") NAILS SPACED 6 INCHES ON PANEL EDGES, 12 INCHES AT INTERMEDIATE SUPPORTS.
(k) PANEL SUPPORTS AT 24 INCHES. CASING OF FINISH NAILS SPACED 6 INCHES ON PANEL EDGES, 12 INCHES AT INTERMEDIATE SUPPORTS.
(l) FOR ROOF SHEATHING APPLICATIONS, 8d NAILS (2-1/2" X 0.113") ARE THE MINIMUM REQUIRED FOR WOOD STRUCTURAL PANELS.
(m) STAPLES SHALL HAVE A MINIMUM CROWN WIDTH OF 7/16 INCH.
(n) FOR ROOF SHEATHING APPLICATIONS, FASTENERS SPACED 4 INCHES ON CENTER AT EDGES, 8 INCHES AT INTERMEDIATE SUPPORTS.
(o) FASTENERS SPACED 4 INCHES ON CENTER AT EDGES, 8 INCHES AT INTERMEDIATE SUPPORTS FOR SUBFLOOR AND WALL SHEATHING AND 3 INCHES ON CENTER AT EDGES, 6 INCHES AT INTERMEDIATE SUPPORTS FOR ROOF SHEATHING.
(p) FASTENERS SPACED 4 INCHES ON CENTER AT EDGES, 8 INCHES AT INTERMEDIATE SUPPORTS.

FASTENING SCHEDULE
2016 CBC, TABLE 2304.10.1

DESCRIPTION OF BLDG. ELEMENTS	NUMBER AND TYPE OF FASTENING	SPACING AND LOCATION
1. JOIST TO SILL OR GIRDER	(3)-8d COMMON (2½"X0.131") (3)-3"X0.131 NAILS	TOENAIL
2. BRIDGING TO JOIST	(2)-8d COMMON (2½"X0.131") (2)-3"X0.131 NAILS	TOENAIL EACH END
3. 1"X6" SUBFLOOR OR LESS TO EACH JOIST	(2)-8d COMMON (2½"X0.131")	FACE NAIL
4. WIDER THAN 1"X6" SUBFLOOR TO EACH JOIST	(3)-8d COMMON (2½"X0.131")	FACE NAIL
5. 2" SUBFLOOR TO JOIST OR GIRDER	(2)-16d COMMON (3½"X0.162")	BLIND AND FACE NAIL
6. SOLE PLATE TO JOIST OR BLOCKING SOLE PLATE TO JOIST OR BLOCKING AT BRACED WALL PANEL	16d (3½"X0.135") AT 16" O.C. 3"X0.131" NAIL AT 8" O.C. (3)-16d (3½"X0.135") AT 16" (4)-3"X0.131" NAILS AT 16" O.C.	TYPICAL FACE NAIL BRACED WALL PANELS
7. TOP PLATE TO STUD	(2)-16d COMMON (3½"X0.162") (3)-3"X0.131" NAILS	END NAIL
8. STUD TO SOLE PLATE	(4)-8d COMMON (2½"X0.131") (4)-3"X0.131 NAILS (2)-16d COMMON (3½"X0.162") (3)-3"X0.131" NAILS	TOENAIL END NAIL
9. DOUBLE STUDS	16d (3½"X0.135") AT 24" O.C. (3)-3"X0.131" NAILS AT 8" O.C.	FACE NAIL
10. DOUBLE TOP PLATES DOUBLE TOP PLATES	16d (3½"X0.135") AT 16" O.C. (3)-3"X0.131" NAILS AT 12" O.C. (8)-16d COMMON (3½"X0.162") (12)-3"X0.131" NAILS	TYPICAL FACE NAIL LAP SPLICE
11. BLOCKING BETWEEN JOIST OR RAFTERS TO TOP PLATE	(3)-8d COMMON (2½"X0.131") (3)-3"X0.131" NAILS	TOENAIL
12. RIM JOIST TO TOP PLATE	8d COMMON (2½"X0.131") AT 6" O.C. (3)-3"X0.131" NAIL AT 6" O.C.	TOENAIL
13. TOP PLATES, LAPS AND INTERSECTIONS	(2)-16d COMMON (3½"X0.162") (3)-3"X0.131" NAILS	FACE NAIL
14. CONTINUOUS HEADER, TWO PIECES	16d COMMON (3½"X0.162")	16" O.C. ALONG EDGE
15. CEILING JOIST TO PLATE	(3)-8d COMMON (2½"X0.131") (5)-3"X0.131" NAIL	TOENAIL
16. CONTINUOUS HEADER TO STUD	(4)-8d COMMON (2½"X0.131")	TOENAIL
17. CEILING JOISTS, LAPS OVER PARTITIONS (SEE SECTION 2308.10.4.1, TABLE 2308.10.4.1)	(3)-16d COMMON (3½"X0.162") MINIMUM, TABLE 2308.10.4.1 (4)-3"X0.131" NAILS	FACE NAIL
18. CEILING JOISTS TO PARALLEL RAFTER (SEE SECTION 2308.10.4.1, TABLE 2308.10.4.1)	(3)-16d COMMON (3½"X0.162") MINIMUM, TABLE 2308.10.4.1 (4)-3"X0.131" NAILS	FACE NAIL
19. RAFTER TO PLATE (SEE SECTION 2308.10.1, TABLE 2308.10.1)	(3)-8d COMMON (2½"X0.131") (3)-3"X0.131" NAILS,	TOENAIL
20. 1" DIAGONAL BRACE TO EACH STUD AND PLATE.	(2)-8d COMMON (2½"X0.131") (2)-3"X0.131" NAILS,	FACE NAIL
21. 1" X 8" SHEATHING TO EACH BEARING	(3)-8d COMMON (2½"X0.131")	FACE NAIL
22. WIDER THAN 1" X 8" SHEATHING TO EACH BEARING	(3)-8d COMMON (2½"X0.131")	FACE NAIL
23. BUILT UP CORNER STUDS	16d COMMON (3½"X0.162") 3"X0.131" NAILS	24" O.C. 16" O.C.

- NOT TO SCALE T15

Orion Structural
ORION STRUCTURAL GROUP, INC.
222 East Thousand Oaks Boulevard, Suite 220
Thousand Oaks, CA 91360
Phone: (805)370-8136 Fax: (805)494-0418

DRAWING NOTES:
THE USER OF THESE PLANS AND SPECIFICATIONS SHALL BE RESTRICTED TO THE ORIGINAL SITE FOR WHICH THEY WERE PREPARED AND PUBLICATION THEREOF IS EXPRESSLY LIMITED TO SUCH USE. REPRODUCTION OR PUBLICATION BY ANY METHOD, IN WHOLE OR IN PART IS PROHIBITED. TITLE TO THESE PLANS AND SPECIFICATIONS REMAIN WITH ORION STRUCTURAL GROUP, INC. WITHOUT PREJUDICE. VISUAL CONTACT WITH THESE PLANS AND SPECIFICATIONS SHALL CONSTITUTE PRIMA FACIE EVIDENCE OF THE ACCEPTANCE OF THESE RESTRICTIONS.

DO NOT SCALE THESE DRAWINGS. REFER TO ARCHITECTURAL PLANS FOR ALL WRITTEN DIMENSIONS AND ELEVATIONS.

THE GENERAL CONTRACTOR SHALL VERIFY AND BE RESPONSIBLE FOR ALL DIMENSIONS AND EXISTING CONDITIONS ON THE JOB AND SHALL REPORT ANY DISCREPANCIES TO THE ENGINEER AND THE ARCHITECT FOR RESOLUTION PRIOR TO COMMENCING WITH THE WORK IN QUESTION.

REGISTERED PROFESSIONAL ENGINEER
WILL A. LANGE
No. 5430
Exp. 06/30/2020
STRUCTURAL
STATE OF CALIFORNIA

SIGN DATE: 08/14/2019

COMMERCIAL OFFICES
TENANT IMPROVEMENT
250 SOUTH MILLS ROAD, VENTURA, CA 93003

REVISIONS
B&S SUB.-1 08/14/2019

DRAWN BY:	DF / MH
PROJECT MANAGER:	DF / WL
PROJECT NUMBER:	18023
DATE:	08/14/2019
DRAWING SCALE:	PER SHEET

S0.3

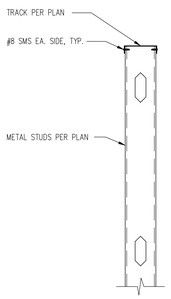

TYPICAL STUD TO TRACK CONNECTION SCALE: 1"=1'-0" T34

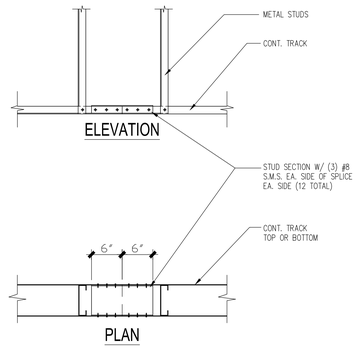

TYPICAL TRACK SPLICE SCALE: 1"=1'-0" T31

EXTERIOR NON-BEARING HEADER/SILL SCHEDULE

MAX. CLEAR SPAN	HEADER SECTION	SILL SECTION	JAMB SECTION
5'-0"	(2) 600T200-43 & (2) 400S162-43	SINGLE 600T200-54 TRACK	(2) 600S162-43
8'-0"	(2) 600T200-54 & (2) 400S162-54	SAME AS HEADER	(2) 600S162-54
13'-0"	(2) 600T200-54 & (2) 800S162-54 UNPUNCHED	SAME AS HEADER	(2) 600S162-54

INTERIOR NON-BEARING HEADER/SILL SCHEDULE

MAX. CLEAR SPAN	HEADER SECTION	SILL SECTION	JAMB SECTION
8'-0"	(2) 400T200-33 & (2) 400S162-33	SINGLE 400T200-43 TRACK	(2) 400S162-33
12'-0"	(2) 400T200-43 & (2) 400S162-43	SAME AS HEADER	(2) 400S162-43
15'-0"	(2) 400T200-54 & (2) 600S162-54 UNPUNCHED	SAME AS HEADER	(2) 400S162-54

TYPICAL DOUBLE STUD MENDING SCALE: 1"=1'-0" T28

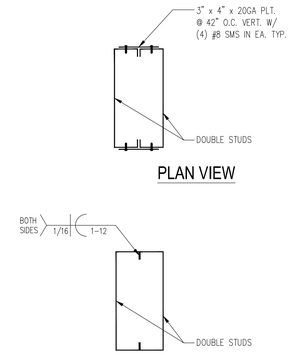

TYPICAL DOUBLE STUD MENDING SCALE: 1"=1'-0" T25

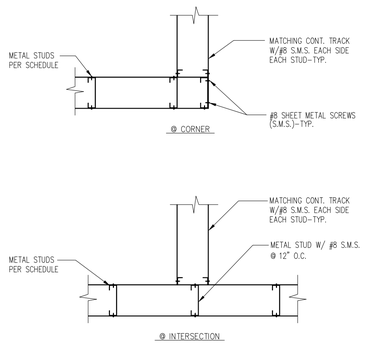

TYP. WALL FRAMING AT INTERSECTION SCALE: 1"=1'-0" T32

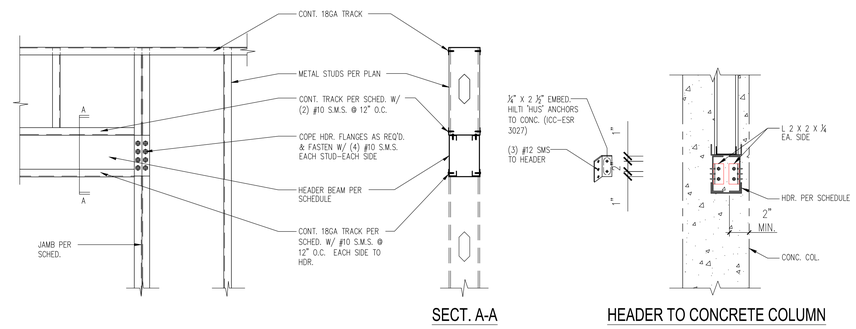

TYP. OPENING IN NON-BEARING METAL STUD WALL SCALE: 1"=1'-0" T26

CEILING JOIST SCHED.

MAX. SPAN	MIN. STUD SIZE	IDENTIFICATION	SPACING	MIN. GROSS SECTION PROPERTIES A (IN²)	S (IN³)	I (IN⁴)
9-0"	4" x 20 GA	400S162-33	24" MAX.	0.275	0.346	0.692
14-3"	6" x 20 GA[1]	600S162-33	16" O.C.	0.344	0.598	1.793

1. BRACE AT MIDSPAN, SEE X/X

JOIST SCHEDULE SCALE: 1"=1'-0" T33

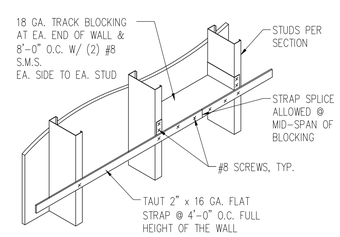

NOTE:
BLKG. & STRAP SHALL OCCUR @ 48" O.C. MAX. VERTICAL SPACING WALL COVERING FULL HT.

TYP. METAL STUD FLANGE BRACING SCALE: 1"=1'-0" T30

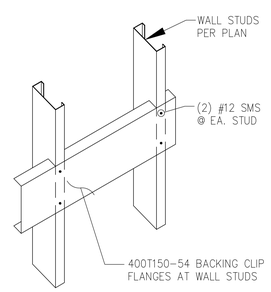

TYPICAL BACKING AT METAL STUD SCALE: 1"=1'-0" T27

- SCALE: 1"=1'-0" T35

- SCALE: 1"=1'-0" T36

Orion Structural
ORION STRUCTURAL GROUP, INC.
223 East Thousand Oaks Boulevard, Suite 220
Thousand Oaks, CA 91360
Phone: (805)730-8336 Fax: (805)494-0418

DRAWING NOTES:
THE USER OF THESE PLANS AND SPECIFICATIONS SHALL BE RESTRICTED TO THE ORIGINAL SITE FOR WHICH THEY WERE PREPARED AND PUBLICATION THEREOF IS EXPRESSLY LIMITED TO SUCH USE. REPRODUCTION OR PUBLICATION BY ANY METHOD, IN WHOLE OR IN PART IS PROHIBITED. TITLE TO THESE PLANS AND SPECIFICATIONS REMAIN WITH ORION STRUCTURAL GROUP, INC. WITHOUT PREJUDICE. VISUAL CONTACT WITH THESE PLANS AND SPECIFICATIONS SHALL CONSTITUTE PRIMA FACIE EVIDENCE OF THE ACCEPTANCE OF THESE RESTRICTIONS.

DO NOT SCALE THESE DRAWINGS. REFER TO ARCHITECTURAL PLANS FOR ALL WRITTEN DIMENSIONS AND ELEVATIONS.

THE GENERAL CONTRACTOR SHALL VERIFY AND BE RESPONSIBLE FOR ALL DIMENSIONS AND EXISTING CONDITIONS ON THE JOB AND SHALL REPORT ANY DISCREPANCIES TO THE ENGINEER AND THE ARCHITECT FOR RESOLUTION PRIOR TO COMMENCING WITH THE WORK IN QUESTION.

REGISTERED PROFESSIONAL ENGINEER
WILL A. LAMPE
No. 5430
Exp. 06/30/2020
STRUCTURAL
STATE OF CALIFORNIA

SIGN DATE: 08/14/2019

COMMERCIAL OFFICES
TENANT IMPROVEMENT
250 SOUTH MILLS ROAD, VENTURA, CA 93003

REVISIONS

	B&S SUB.-1 08/14/2019

DRAWN BY:	DF / MH
PROJECT MANAGER:	DF / WL
PROJECT NUMBER:	18023
DATE:	08/14/2019
DRAWING SCALE:	PER SHEET

S0.4

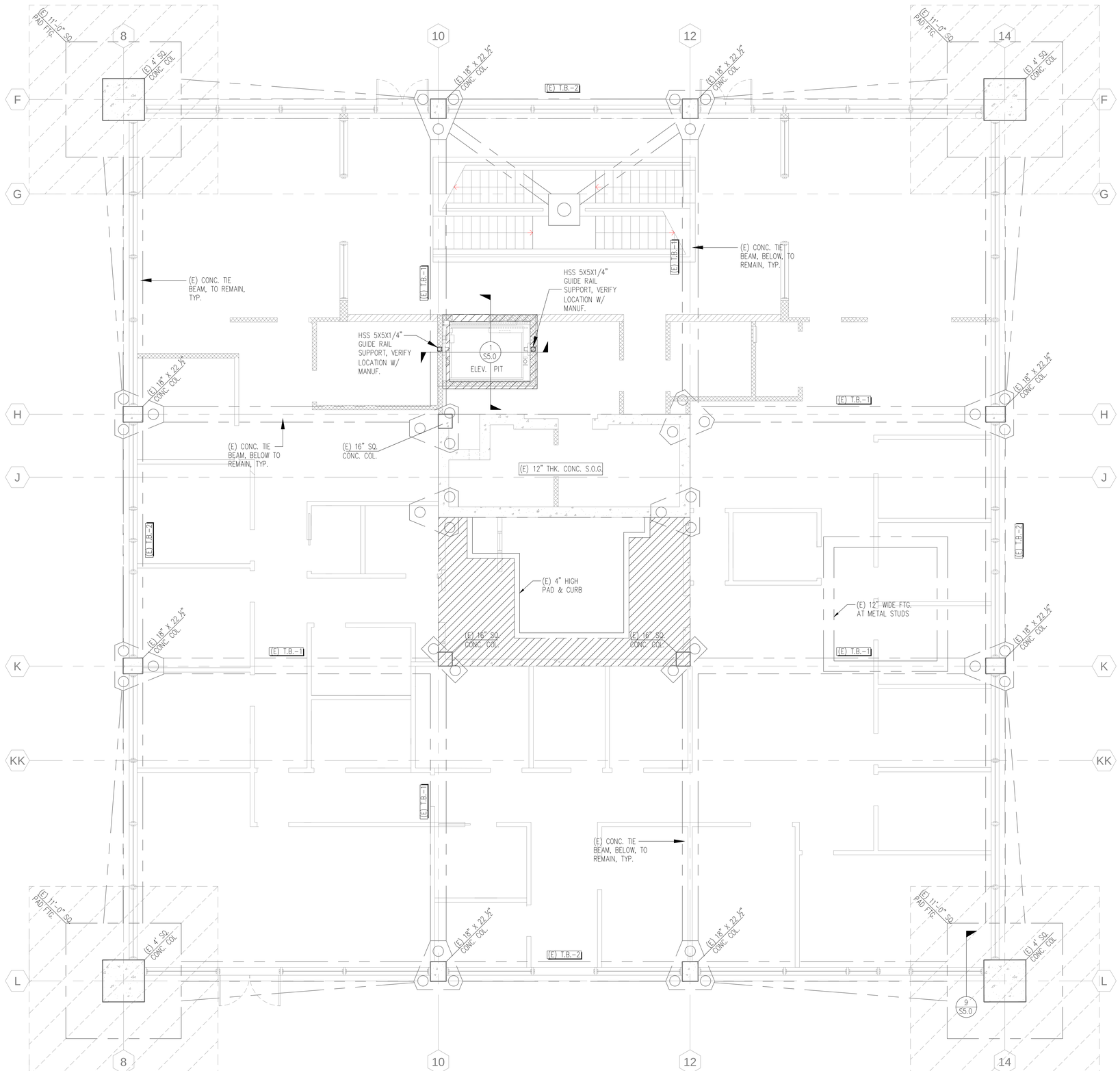

(E) / (N) FOUNDATION PLAN

SCALE: 1/4"=1'-0"

N

Orion Structural

ORION STRUCTURAL GROUP, INC.
223 East Thousand Oaks Boulevard, Suite 220
Thousand Oaks, CA 91360
Phone: (805)730-8336 Fax: (805)494-0418

DRAWING NOTES:
THE USER OF THESE PLANS AND SPECIFICATIONS SHALL BE RESTRICTED TO THE ORIGINAL SITE FOR WHICH THEY WERE PREPARED AND PUBLICATION THEREOF IS EXPRESSLY LIMITED TO SUCH USE. REPRODUCTION OR PUBLICATION BY ANY METHOD, IN WHOLE OR IN PART IS PROHIBITED. TITLE TO THESE PLANS AND SPECIFICATIONS REMAIN WITH ORION STRUCTURAL GROUP, INC. WITHOUT PREJUDICE. VISUAL CONTACT WITH THESE PLANS AND SPECIFICATIONS SHALL CONSTITUTE PRIMA FACIE EVIDENCE OF THE ACCEPTANCE OF THESE RESTRICTIONS.

DO NOT SCALE THESE DRAWINGS. REFER TO ARCHITECTURAL PLANS FOR ALL WRITTEN DIMENSIONS AND ELEVATIONS.

THE GENERAL CONTRACTOR SHALL VERIFY AND BE RESPONSIBLE FOR ALL DIMENSIONS AND EXISTING CONDITIONS ON THE JOB AND SHALL REPORT ANY DISCREPANCIES TO THE ENGINEER AND THE ARCHITECT FOR RESOLUTION PRIOR TO COMMENCING WITH THE WORK IN QUESTION.

REGISTERED PROFESSIONAL ENGINEER
WILL A. LAMPE
No. 5430
Exp. 06/30/2020
STRUCTURAL
STATE OF CALIFORNIA

SIGN DATE: 08/14/2019

COMMERCIAL OFFICES
TENANT IMPROVEMENT

250 SOUTH MILLS ROAD, VENTURA, CA 93003

REVISIONS
B&S SUB.-1 08/14/2019

DRAWN BY:	DF / MH
PROJECT MANAGER:	DF / WL
PROJECT NUMBER:	18023
DATE:	08/14/2019
DRAWING SCALE:	PER SHEET

S1.0

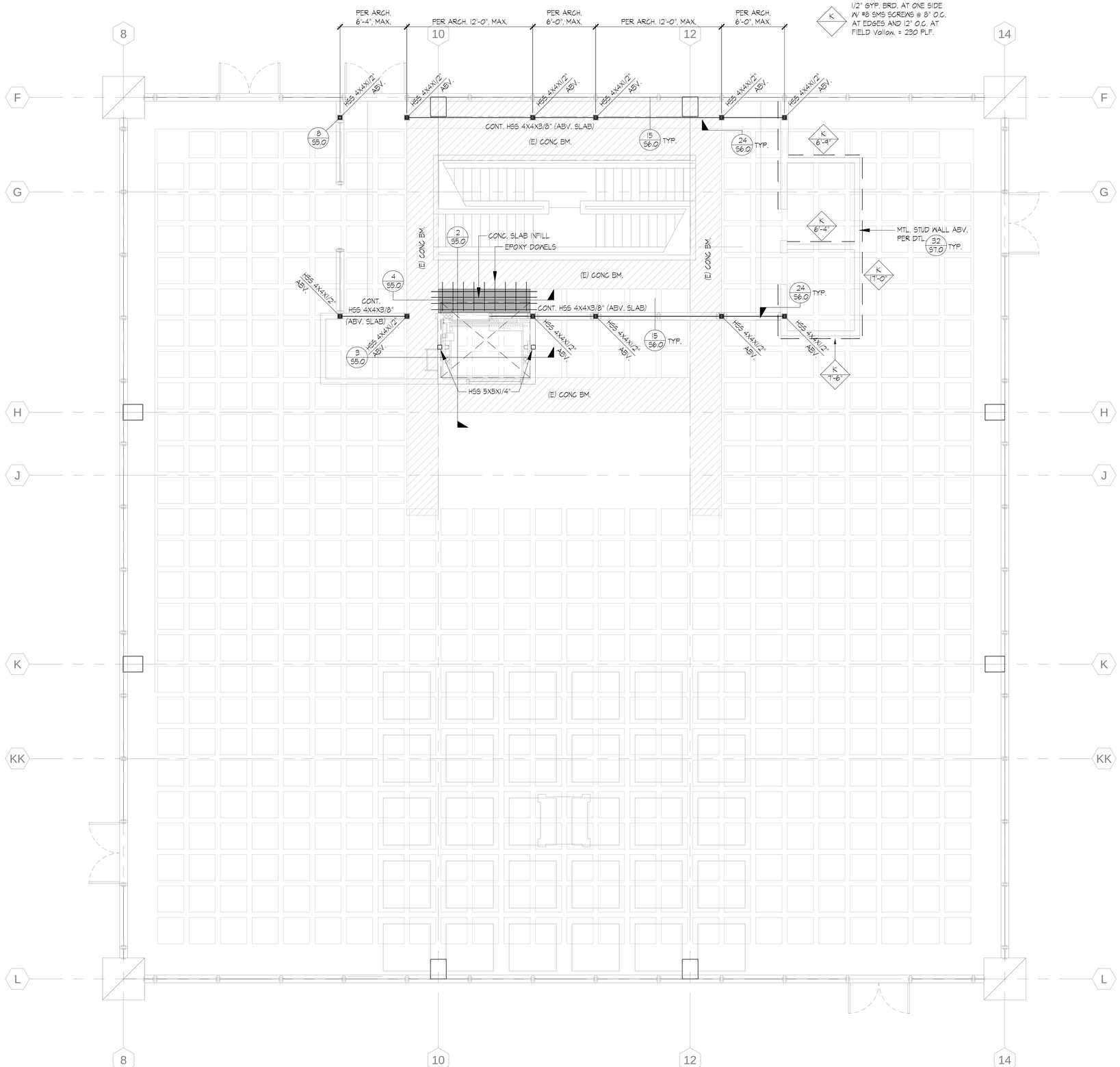

NOTE:

ALL EXISTING FRAMING SHOWN IS FOR REFERENCE ONLY. CONTRACTOR TO FIELD VERIFY ALL INFORMATION PRIOR TO START OF WORK. NOTIFY ARCH. / ENGINEER AND OWNER FOR ANY DISCREPANCIES OBSERVED IN THE FIELD.

SUB-PLAZA LEVEL FRAMING PLAN

SCALE: 1/4"=1'-0"

N

Orion Structural

ORION STRUCTURAL GROUP, INC.
223 East Thousand Oaks Boulevard, Suite 220
Thousand Oaks, CA 91360
Phone: (805)370-8136 Fax: (805)494-0418

DRAWING NOTES:
THE USER OF THESE PLANS AND SPECIFICATIONS SHALL BE RESTRICTED TO THE ORIGINAL SITE FOR WHICH THEY WERE PREPARED AND PUBLICATION THEREOF IS EXPRESSLY LIMITED TO SUCH USE. REPRODUCTION OR PUBLICATION BY ANY METHOD, IN WHOLE OR IN PART IS PROHIBITED. TITLE TO THESE PLANS AND SPECIFICATIONS REMAIN WITH ORION STRUCTURAL GROUP, INC. WITHOUT PREJUDICE. VISUAL CONTACT WITH THESE PLANS AND SPECIFICATIONS SHALL CONSTITUTE PRIMA FACIE EVIDENCE OF THE ACCEPTANCE OF THESE RESTRICTIONS.

DO NOT SCALE THESE DRAWINGS. REFER TO ARCHITECTURAL PLANS FOR ALL WRITTEN DIMENSIONS AND ELEVATIONS.

THE GENERAL CONTRACTOR SHALL VERIFY AND BE RESPONSIBLE FOR ALL DIMENSIONS AND EXISTING CONDITIONS ON THE JOB AND SHALL REPORT ANY DISCREPANCIES TO THE ENGINEER AND THE ARCHITECT FOR RESOLUTION PRIOR TO COMMENCING WITH THE WORK IN QUESTION.

REGISTERED PROFESSIONAL ENGINEER
WILL A. LAMPE
No. 5430
Exp. 06/30/2020
STRUCTURAL
STATE OF CALIFORNIA

SIGN DATE: 08/14/2019

COMMERCIAL OFFICES
TENANT IMPROVEMENT

250 SOUTH MILLS ROAD, VENTURA, CA 93003

REVISIONS	
	B&S SUB.-1 08/14/2019
DRAWN BY:	DF / MH
PROJECT MANAGER:	DF / WL
PROJECT NUMBER:	18023
DATE:	08/14/2019
DRAWING SCALE:	PER SHEET

S2.0

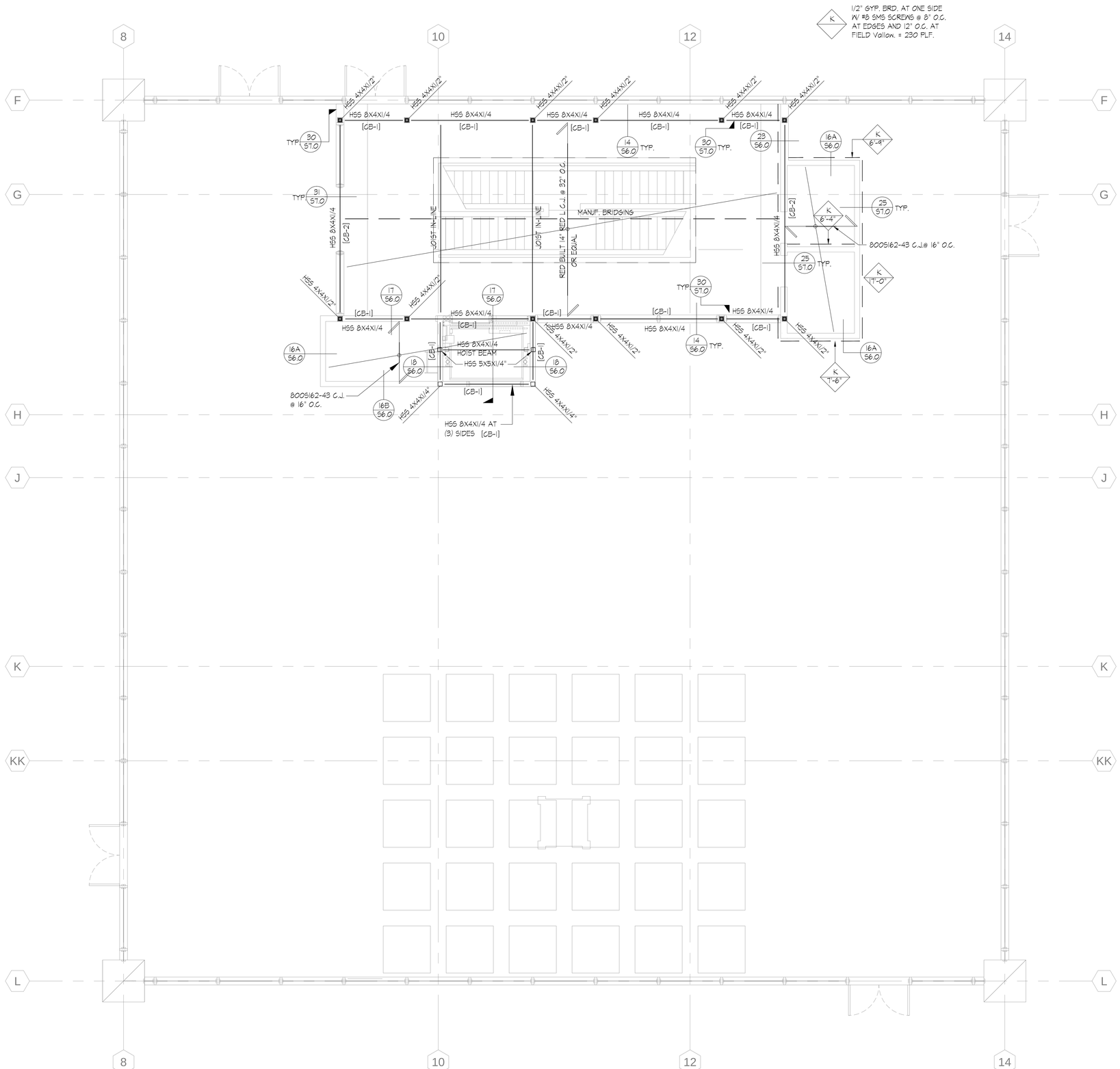

K 1/2" GYP. BRD. AT ONE SIDE W/ #8 SMS SCREWS @ 8" O.C. AT EDGES AND 12" O.C. AT FIELD Vallow. = 230 PLF.

NOTE:

ALL EXISTING FRAMING SHOWN IS FOR REFERENCE ONLY. CONTRACTOR TO FIELD VERIFY ALL INFORMATION PRIOR TO START OF WORK. NOTIFY ARCH. / ENGINEER AND OWNER FOR ANY DISCREPANCIES OBSERVED IN THE FIELD.

CEILING LEVEL FRAMING PLAN

SCALE: 1/4"=1'-0"

N

Orion Structural

ORION STRUCTURAL GROUP, INC.
223 East Thousand Oaks Boulevard, Suite 220
Thousand Oaks, CA 91360
Phone: (805)730-8336 Fax: (805)494-0418

DRAWING NOTES:
THE USER OF THESE PLANS AND SPECIFICATIONS SHALL BE RESTRICTED TO THE ORIGINAL SITE FOR WHICH THEY WERE PREPARED AND PUBLICATION THEREOF IS EXPRESSLY LIMITED TO SUCH USE. REPRODUCTION OR PUBLICATION BY ANY METHOD, IN WHOLE OR IN PART IS PROHIBITED. TITLE TO THESE PLANS AND SPECIFICATIONS REMAIN WITH ORION STRUCTURAL GROUP, INC. WITHOUT PREJUDICE. VISUAL CONTACT WITH THESE PLANS AND SPECIFICATIONS SHALL CONSTITUTE PRIMA FACIE EVIDENCE OF THE ACCEPTANCE OF THESE RESTRICTIONS.

DO NOT SCALE THESE DRAWINGS. REFER TO ARCHITECTURAL PLANS FOR ALL WRITTEN DIMENSIONS AND ELEVATIONS.

THE GENERAL CONTRACTOR SHALL VERIFY AND BE RESPONSIBLE FOR ALL DIMENSIONS AND EXISTING CONDITIONS ON THE JOB AND SHALL REPORT ANY DISCREPANCIES TO THE ENGINEER AND THE ARCHITECT FOR RESOLUTION PRIOR TO COMMENCING WITH THE WORK IN QUESTION.

REGISTERED PROFESSIONAL ENGINEER
WILL A. LAMPE
No. 5430
Exp. 06/30/2020
STRUCTURAL
STATE OF CALIFORNIA

SIGN DATE: 08/14/2019

COMMERCIAL OFFICES
TENANT IMPROVEMENT

250 SOUTH MILLS ROAD, VENTURA, CA 93003

REVISIONS
B&S SUB.-1 08/14/2019

DRAWN BY:	DF / MH
PROJECT MANAGER:	DF / WL
PROJECT NUMBER:	18023
DATE:	08/14/2019
DRAWING SCALE:	PER SHEET

S3.0

MEZZANINE LEVEL FRAMING PLAN

NOTE:

ALL EXISTING FRAMING SHOWN IS FOR REFERENCE ONLY. CONTRACTOR TO FIELD VERIFY ALL INFORMATION PRIOR TO START OF WORK. NOTIFY ARCH. / ENGINEER AND OWNER FOR ANY DISCREPANCIES OBSERVED IN THE FIELD.

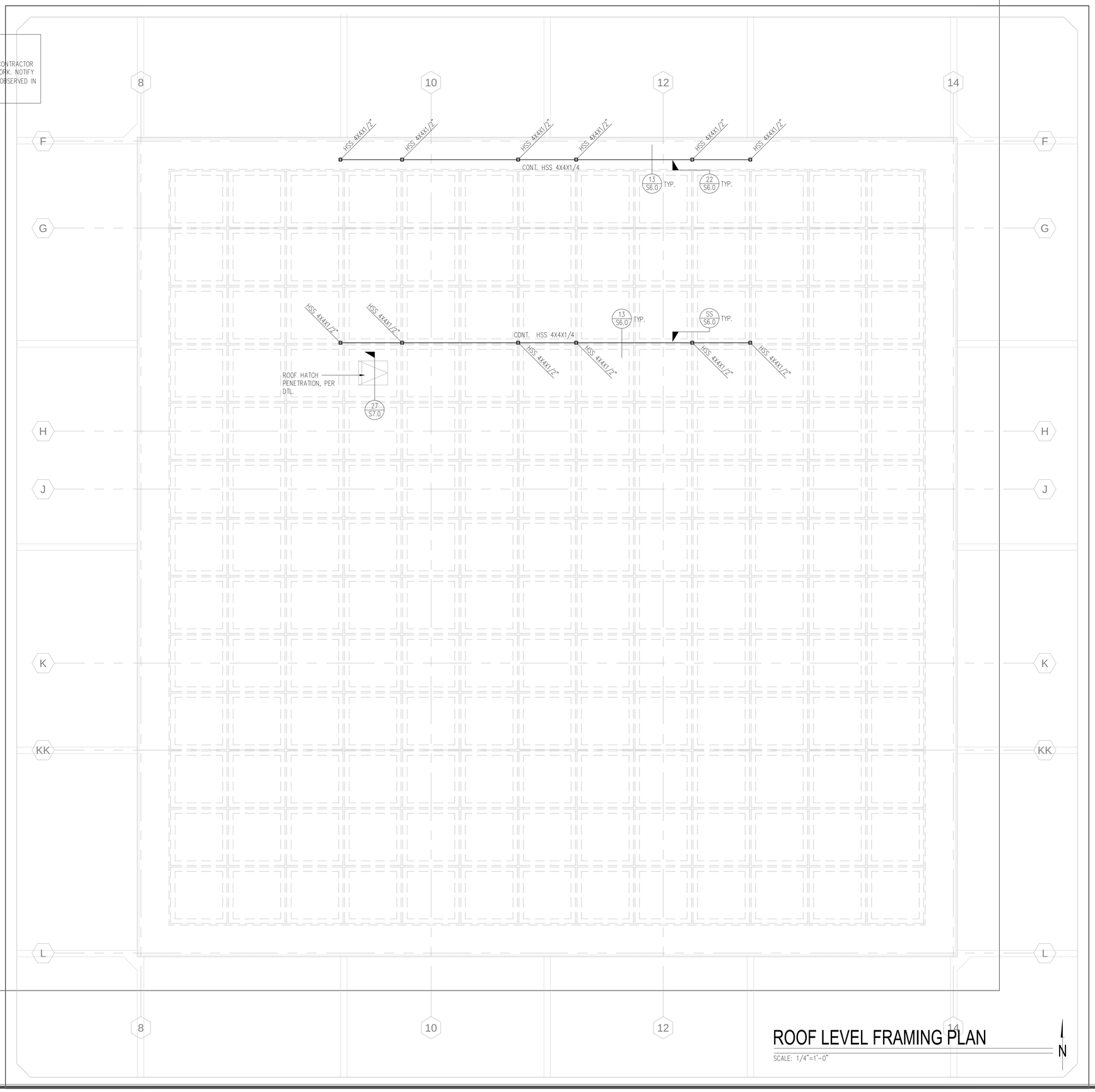

ROOF LEVEL FRAMING PLAN

SCALE: 1/4"=1'-0"

Orion Structural

ORION STRUCTURAL GROUP, INC.
223 East Thousand Oaks Boulevard, Suite 220
Thousand Oaks, CA 91360
Phone: (805)730-8136 Fax: (805)494-0418

DRAWING NOTES:
THE USER OF THESE PLANS AND SPECIFICATIONS SHALL BE RESTRICTED TO THE ORIGINAL SITE FOR WHICH THEY WERE PREPARED AND PUBLICATION THEREOF IS EXPRESSLY LIMITED TO SUCH USE. REPRODUCTION OR PUBLICATION BY ANY METHOD, IN WHOLE OR IN PART IS PROHIBITED. TITLE TO THESE PLANS AND SPECIFICATIONS REMAIN WITH ORION STRUCTURAL GROUP, INC. WITHOUT PREJUDICE. VISUAL CONTACT WITH THESE PLANS AND SPECIFICATIONS SHALL CONSTITUTE PRIMA FACIE EVIDENCE OF THE ACCEPTANCE OF THESE RESTRICTIONS.

DO NOT SCALE THESE DRAWINGS. REFER TO ARCHITECTURAL PLANS FOR ALL WRITTEN DIMENSIONS AND ELEVATIONS.

THE GENERAL CONTRACTOR SHALL VERIFY AND BE RESPONSIBLE FOR ALL DIMENSIONS AND EXISTING CONDIONS ON THE JOB AND SHALL REPORT ANY DISCREPANCIES TO THE ENGINEER AND THE ARCHITECT FOR RESOLUTION PRIOR TO COMMENCING WITH THE WORK IN QUESTION.

REGISTERED PROFESSIONAL ENGINEER
WILL A. LAMPE
No. 5430
Exp. 06/30/2020
STRUCTURAL
STATE OF CALIFORNIA

SIGN DATE: 08/14/2019

COMMERCIAL OFFICES
TENANT IMPROVEMENT

250 SOUTH MILLS ROAD, VENTURA, CA 93003

REVISIONS
B&S SUB.-1 08/14/2019

DRAWN BY:	DF / MH
PROJECT MANAGER:	DF / WL
PROJECT NUMBER:	18023
DATE:	08/14/2019
DRAWING SCALE:	PER SHEET

S4.0

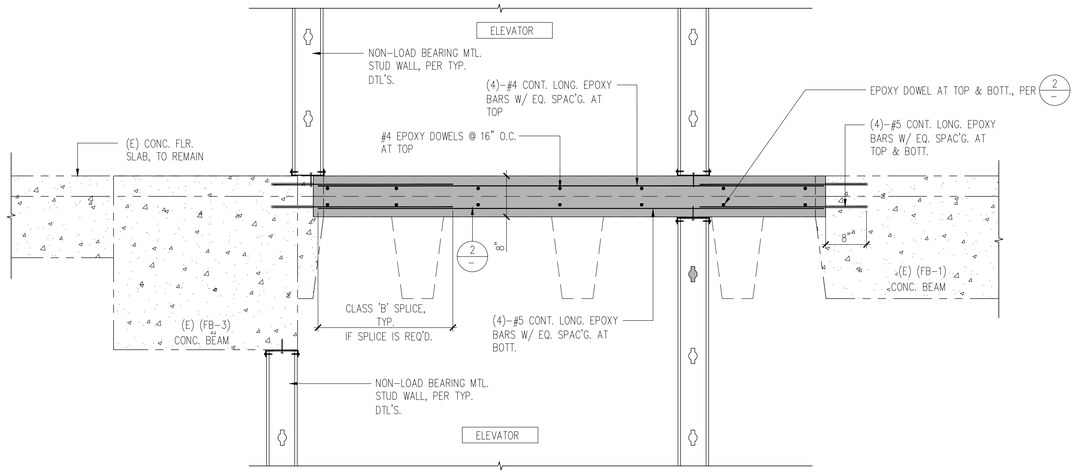

. SCALE: 1"=1'-0" 10 SECTION THRU PLAZA FLOOR OPENING SCALE: 1"=1'-0" 4

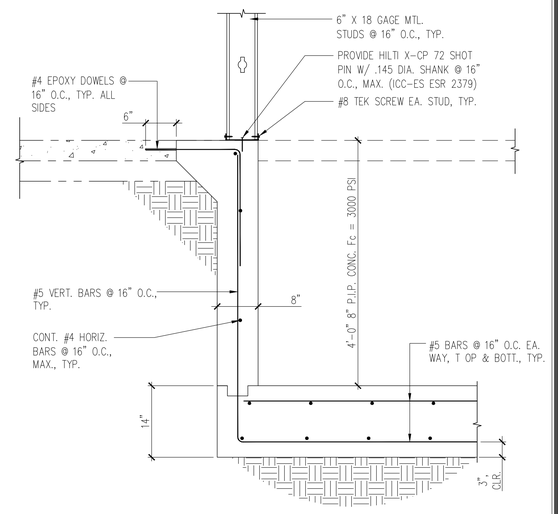

SECTION AT ELEVATOR PIT SCALE: 1"=1'-0" 1

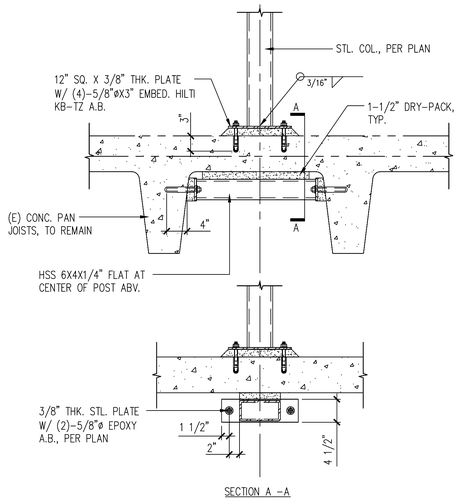

. SCALE: 1"=1'-0" 11 COLUMN CONNECTION AT SLAB SCALE: 1"=1'-0" 8

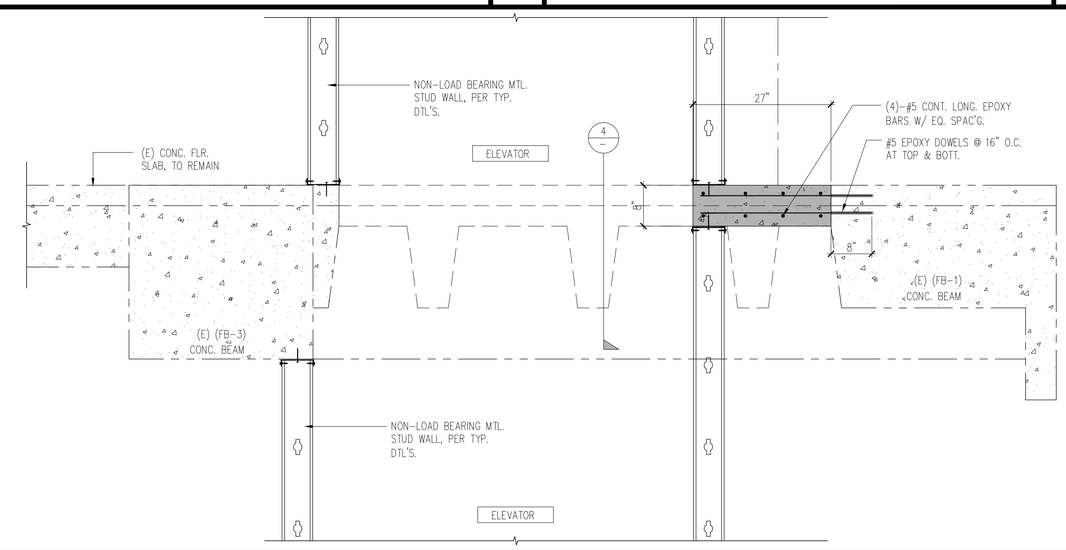

SECTION THRU PLAZA FLOOR OPENING SCALE: 1"=1'-0" 2

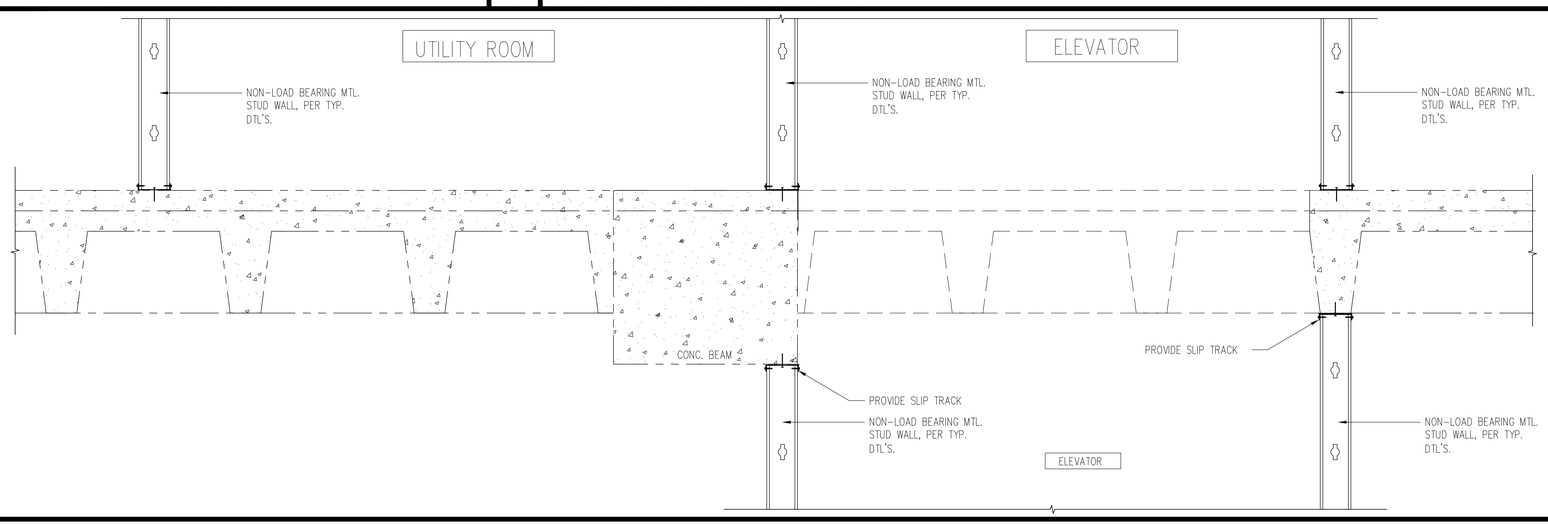

- SCALE: 1"=1'-0" 12 LONGITUDINAL SECTION THROUGH UTILITY ROOM AND ELEVATOR - (PLAZA LEVEL) SCALE: 1"=1'-0" 3

Orion Structural
ORION STRUCTURAL GROUP, INC.
222 East Thousand Oaks Boulevard, Suite 220
Thousand Oaks, CA 91360
Phone: (805)730-8336 Fax: (805)494-0418

DRAWING NOTES:
THE USER OF THESE PLANS AND SPECIFICATIONS SHALL BE RESTRICTED TO THE ORIGINAL SITE FOR WHICH THEY WERE PREPARED AND PUBLICATION THEREOF IS EXPRESSLY LIMITED TO SUCH USE. REPRODUCTION OR PUBLICATION BY ANY METHOD, IN WHOLE OR IN PART IS PROHIBITED. TITLE TO THESE PLANS AND SPECIFICATIONS REMAIN WITH ORION STRUCTURAL GROUP, INC. WITHOUT PREJUDICE. VISUAL CONTACT WITH THESE PLANS AND SPECIFICATIONS SHALL CONSTITUTE PRIMA FACIE EVIDENCE OF THE ACCEPTANCE OF THESE RESTRICTIONS.

DO NOT SCALE THESE DRAWINGS. REFER TO ARCHITECTURAL PLANS FOR ALL WRITTEN DIMENSIONS AND ELEVATIONS.

THE GENERAL CONTRACTOR SHALL VERIFY AND BE RESPONSIBLE FOR ALL DIMENSIONS AND EXISTING CONDITIONS ON THE JOB AND SHALL REPORT ANY DISCREPANCIES TO THE ENGINEER AND THE ARCHITECT FOR RESOLUTION PRIOR TO COMMENCING WITH THE WORK IN QUESTION.

REGISTERED PROFESSIONAL ENGINEER
WILL A. LAMPE
No. 5430
Exp. 06/30/2020
STRUCTURAL
STATE OF CALIFORNIA

SIGN DATE: 08/14/2019

COMMERCIAL OFFICES
TENANT IMPROVEMENT
250 SOUTH MILLS ROAD, VENTURA, CA 93003

REVISIONS
B&S SUB.-1 08/14/2019

DRAWN BY:	DF / MH
PROJECT MANAGER:	DF / WL
PROJECT NUMBER:	18023
DATE:	08/14/2019
DRAWING SCALE:	PER SHEET

S5.0

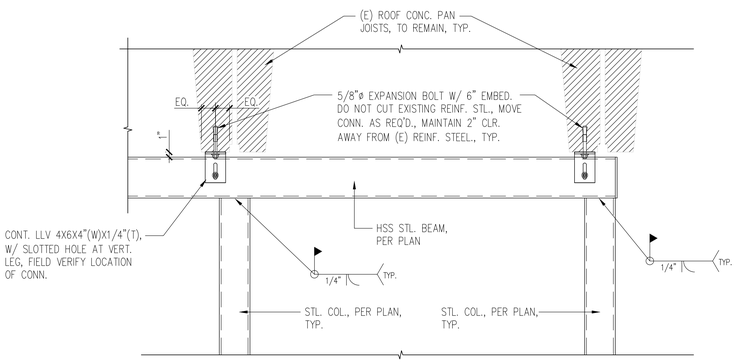

CONTRACTOR TO LOCATE (E) REINF. STEEL AND MARK LOCATIONS ON BEAMS. DO NOT CUT (E) REINF. STL.. CONTACT ENGINEER OF RECORD FOR MODIFICATION OF CONNECTION(S).

HSS COLUMN TO HSS BEAM CONNECTION

SCALE: 1"=1'-0" | 22

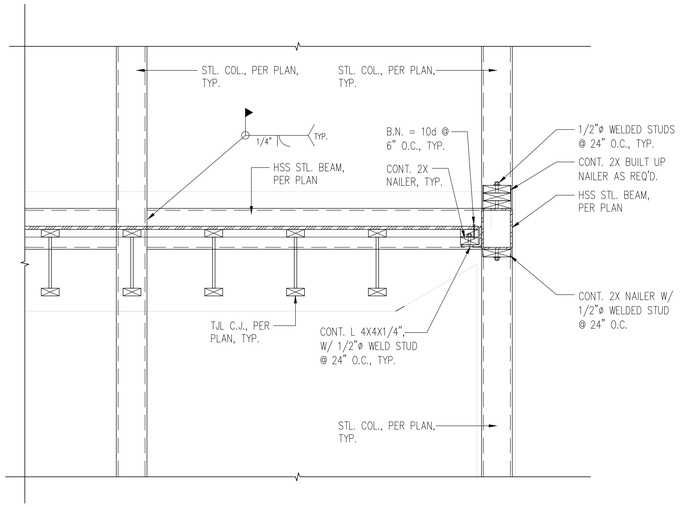

FRAMING CONNECTION

SCALE: 1"=1'-0" | 23

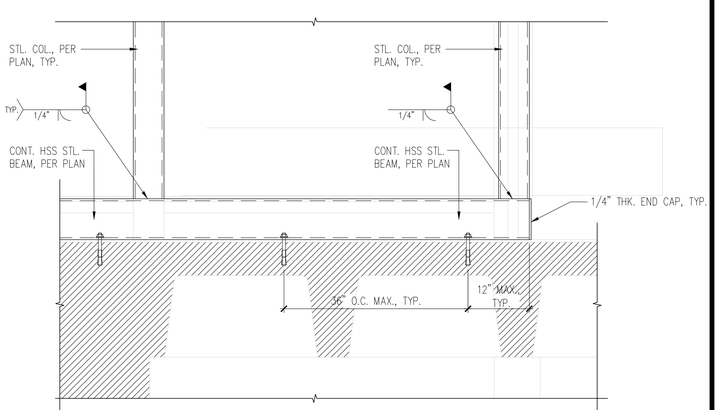

FRAMING CONNECTION AT EXISTING CONCRETE FLOOR

SCALE: 1"=1'-0" | 24

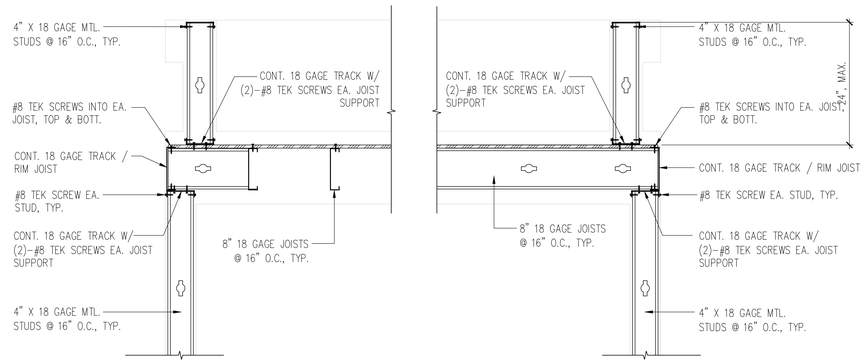

SECTION – A

SECTION – B

FRAMING CONNECTION

SCALE: 1"=1'-0" | 16

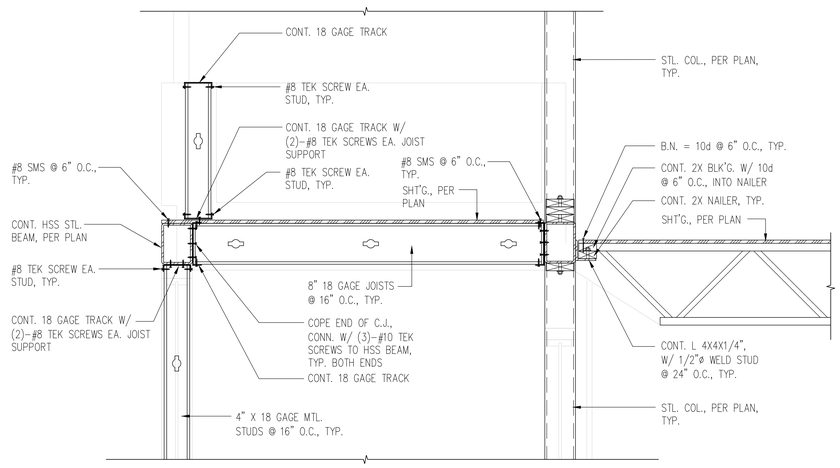

FRAMING CONNECTION

SCALE: 1"=1'-0" | 17

FRAMING CONNECTION

SCALE: 1"=1'-0" | 18

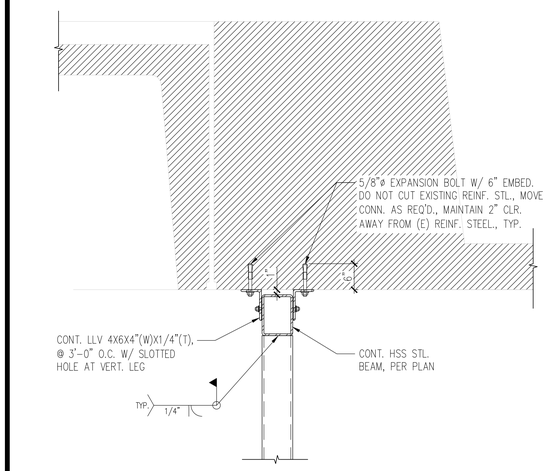

CONTRACTOR TO LOCATE (E) REINF. STEEL AND MARK LOCATIONS ON BEAMS. DO NOT CUT (E) REINF. STL.. CONTACT ENGINEER OF RECORD FOR MODIFICATION OF CONNECTION(S).

HSS CONNECTION AT (E) ROOF CONC. BEAM

SCALE: 1"=1'-0" | 13

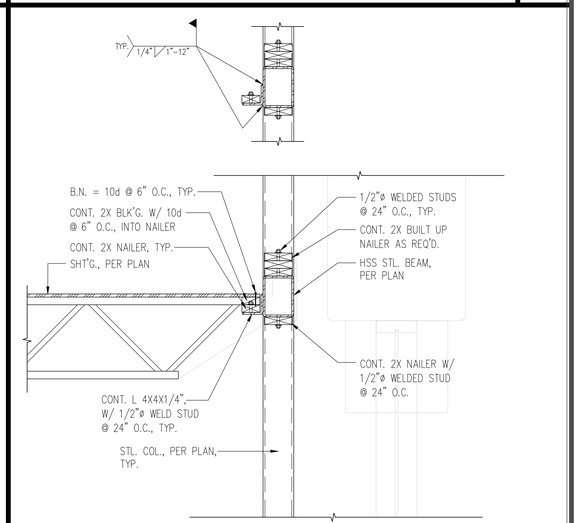

FRAMING CONNECTION

SCALE: 1"=1'-0" | 14

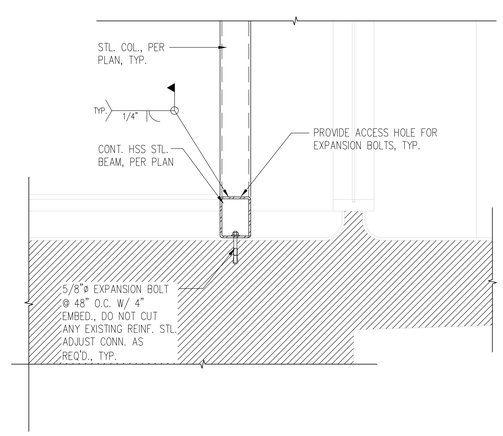

HSS CONN. AT (E) CONC. FLOOR (PLAZA LEVEL)

SCALE: 1"=1'-0" | 15

Orion Structural
ORION STRUCTURAL GROUP, INC
223 East Thousand Oaks Boulevard, Suite 220
Thousand Oaks, CA 91360
Phone: (805)750-9136 Fax: (805)494-0418

DRAWING NOTES:
THE USER OF THESE PLANS AND SPECIFICATIONS SHALL BE RESTRICTED TO THE ORIGINAL SITE FOR WHICH THEY WERE PREPARED AND PUBLICATION THEREOF IS EXPRESSLY LIMITED TO SUCH USE. REPRODUCTION OR PUBLICATION BY ANY METHOD, IN WHOLE OR IN PART IS PROHIBITED. TITLE TO THESE PLANS AND SPECIFICATIONS REMAIN WITH ORION STRUCTURAL GROUP, INC. WITHOUT PREJUDICE. VISUAL CONTACT WITH THESE PLANS AND SPECIFICATIONS SHALL CONSTITUTE PRIMA FACIE EVIDENCE OF THE ACCEPTANCE OF THESE RESTRICTIONS.

DO NOT SCALE THESE DRAWINGS. REFER TO ARCHITECTURAL PLANS FOR ALL WRITTEN DIMENSIONS AND ELEVATIONS.

THE GENERAL CONTRACTOR SHALL VERIFY AND BE RESPONSIBLE FOR ALL DIMENSIONS AND EXISTING CONDITIONS ON THE JOB AND SHALL REPORT ANY DISCREPANCIES TO THE ENGINEER AND THE ARCHITECT FOR RESOLUTION PRIOR TO COMMENCING WITH THE WORK IN QUESTION.

REGISTERED PROFESSIONAL ENGINEER
DULL A. LABRY
No. 5430
Exp. 06/30/2020
STRUCTURAL
STATE OF CALIFORNIA

SIGN DATE: 08/14/2019

COMMERCIAL OFFICES TENANT IMPROVEMENT

250 SOUTH MILLS ROAD, VENTURA, CA 93003

REVISIONS
B&S SUB.-1 08/14/2019

DRAWN BY:	DF / MH
PROJECT MANAGER:	DF / WL
PROJECT NUMBER:	18023
DATE:	08/14/2019
DRAWING SCALE:	PER SHEET

S6.0

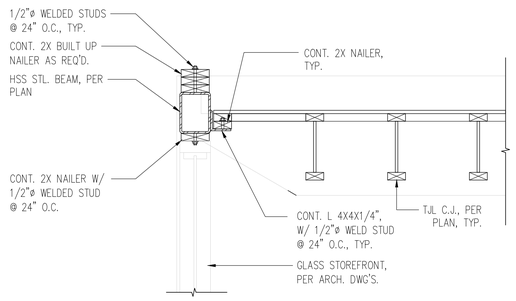

. SCALE: 1"=1'-0" 34

FRAMING CONNECTION SCALE: 1"=1'-0" 31

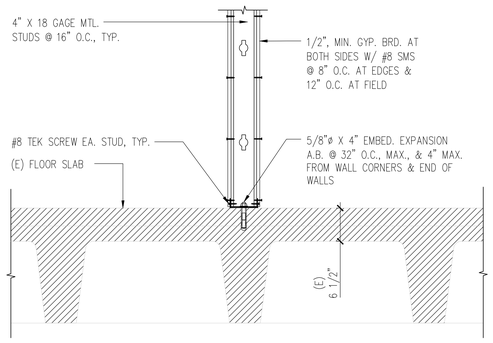

. SCALE: 1"=1'-0" 35

GYP. BOARD SHEAR TRANSFER CONNECTION SCALE: 1"=1'-0" 32

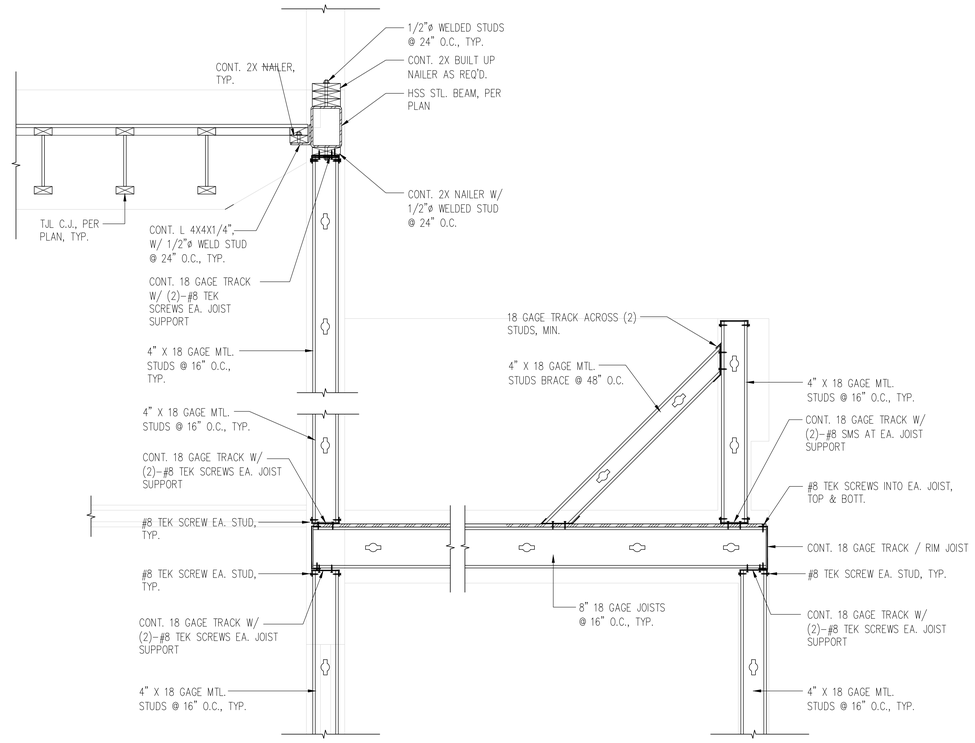

FRAMING CONNECTION SCALE: 1"=1'-0" 25

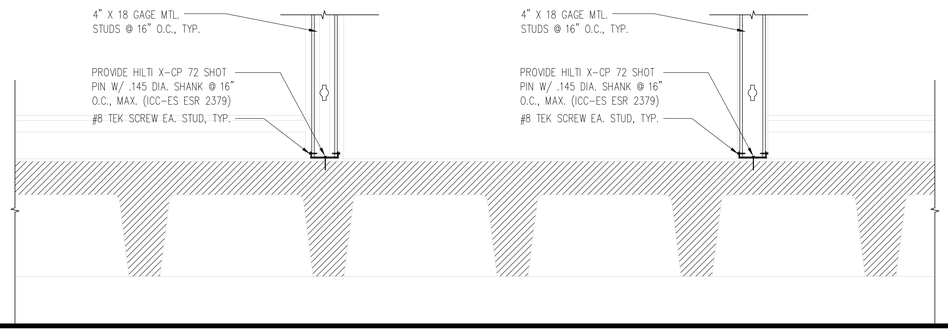

STEEL STUD WALL CONNECTION AT EXISTING SLAB SCALE: 1"=1'-0" 26

. SCALE: 1"=1'-0" 36

. SCALE: 1"=1'-0" 33

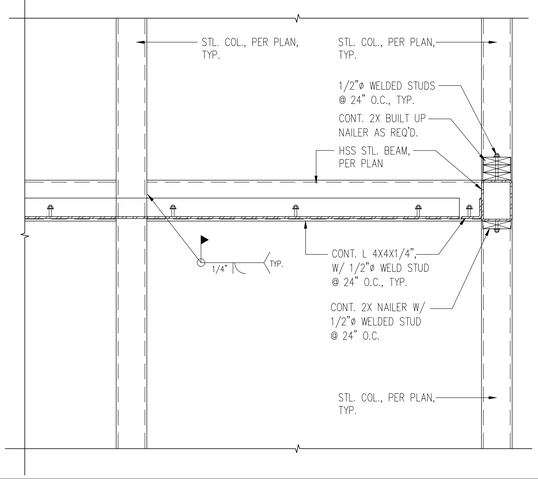

CONNECTIONS AT STEEL BEAMS SCALE: 1"=1'-0" 30

CONTRACTOR TO LOCATE (E) REINF. STEEL AND MARK LOCATIONS ON BEAMS. DO NOT CUT (E) REINF. STL.. CONTACT ENGINEER OF RECORD FOR MODIFICATION OF CONNECTION(S).

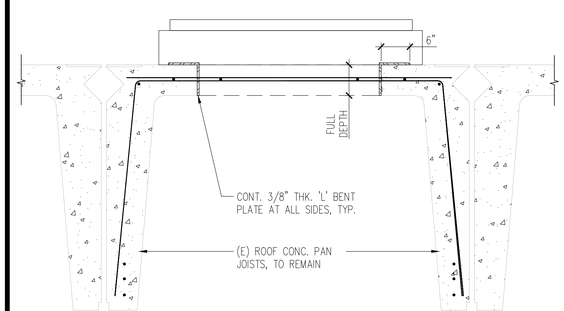

OPENING AT (E) CONC. ROOF SCALE: 1"=1'-0" 27

Orion Structural
ORION STRUCTURAL GROUP, INC.
223 East Thousand Oaks Boulevard, Suite 220
Thousand Oaks, CA 91360
Phone: (805)730-8136 Fax: (805)494-0418

DRAWING NOTES:
THE USER OF THESE PLANS AND SPECIFICATIONS SHALL BE RESTRICTED TO THE ORIGINAL SITE FOR WHICH THEY WERE PREPARED AND PUBLICATION THEREOF IS EXPRESSLY LIMITED TO SUCH USE. REPRODUCTION OR PUBLICATION BY ANY METHOD, IN WHOLE OR IN PART IS PROHIBITED. TITLE TO THESE PLANS AND SPECIFICATIONS REMAIN WITH ORION STRUCTURAL GROUP, INC. WITHOUT PREJUDICE. VISUAL CONTACT WITH THESE PLANS AND SPECIFICATIONS SHALL CONSTITUTE PRIMA FACIE EVIDENCE OF THE ACCEPTANCE OF THESE RESTRICTIONS.

DO NOT SCALE THESE DRAWINGS. REFER TO ARCHITECTURAL PLANS FOR ALL WRITTEN DIMENSIONS AND ELEVATIONS.

THE GENERAL CONTRACTOR SHALL VERIFY AND BE RESPONSIBLE FOR ALL DIMENSIONS AND EXISTING CONDITIONS ON THE JOB AND SHALL REPORT ANY DISCREPANCIES TO THE ENGINEER AND THE ARCHITECT FOR RESOLUTION PRIOR TO COMMENCING WITH THE WORK IN QUESTION.

REGISTERED PROFESSIONAL ENGINEER
WILL A. LAMPE
No. 5430
Exp. 06/30/2020
STRUCTURAL
STATE OF CALIFORNIA

SIGN DATE: 08/14/2019

COMMERCIAL OFFICES
TENANT IMPROVEMENT
250 SOUTH MILLS ROAD, VENTURA, CA 93003

REVISIONS
B&S SUB.-1 08/14/2019

DRAWN BY:	DF / MH
PROJECT MANAGER:	DF / WL
PROJECT NUMBER:	18023
DATE:	08/14/2019
DRAWING SCALE:	PER SHEET

S7.0