PROJECT:

COLONY 65 RESIDENTIAL HOMES

LANCASTER, CALIFORNIA

BUILDER:

IMAGINE DEVELOPMENT L.L.C

6419 AUTUM GOLD WAY
SAN DIEGO, CA
92140
(561) 945- 3771

PROJECT DATA

OCCUPANCY TYPE:	**R-3/U**
CONSTRUCTION TYPE:	**V-B**
CALIFORNIA RESIDENTIAL CODE:	**2016 EDITION**
CALIFORNIA MECHANICAL CODE:	**2016 EDITION**
CALIFORNIA PLUMBING CODE:	**2016 EDITION**
CALIFORNIA ELECTRIC CODE:	**2016 EDITION**
CALIFORNIA ENERGY CODE:	**2016 EDITION**
CALIFORNIA FIRE CODE:	**2016 EDITION**

ABBREVIATIONS

ABV.	ABOVE	FTG.	FOOTING	P.L.	PROPERTY LINE
A/C	AIR CONDITIONER	F.A.U.	FORCED AIR UNIT	RAD.	RADIUS
ALT.	ALTERNATE	FR.	FRENCH	REF.	REFRIGERATOR
BA.	BATH	GI.	GALVANIZED	R/S	RE-SAWN
BM.	BEAM	GAR.	GARAGE	REV.	REVERSE
BLW	BELOW	G.D.O.	GARAGE DOOR OPENER	RDG.	RIDGE
BD.	BOARD	G.D.	GARBAGE DISPOSAL	R.	RISER
CAB.	CABINET	GL.	GLASS	RM.	ROOM
CSMT.	CASEMENT	GRD.	GRADE	SECT.	SECTIONAL
CLG.	CEILING	G.F.I.	GROUND FAULT INTERRUPT	SEC.	SECURITY
℄	CENTER LINE	GYP.	GYPSUM	S & P	SHELF AND POLE
CER.	CERAMIC	HDR.	HEADER	SHLV.	SHELVES
CLR.	CLEAR	HT.	HEIGHT	SIM.	SIMILAR
CONC.	CONCRETE	H.C.	HOLLOW CORE	S.H.	SINGLE HUNG
DETS.	DETAILS	LAM.	LAMINATED	SL.	SLIDING
DIA.	DIAMETER	LAUN.	LAUNDRY	S.C.	SOLID CORE
DW.	DISHWASHER	LAV.	LAVATIORY	SQ.	SQUARE
DR.	DOOR	M.	MASTER	TEMP.	TEMPERED
D.G.	DOUBLE GLAZED	M.C.	MEDICINE CABINET	T.	TREAD
DS.	DOWNSPOUT	MTL.	METAL	TYP.	TYPICAL
EA.	EACH	MIN.	MINIMUM	U.N.O.	UNLESS NOTED OTHERWISE
ELEV.	ELEVATION	N.T.S.	NOT TO SCALE	V.	VALLEY
EQ.	EQUAL	O.C.	ON CENTER	V.P.	VAPOR PROOF
EXH.	EXHAUST	OPNG.	OPENING	VOL.	VOLUME
EXT.	EXTERIOR	OPT.	OPTION	W.I.C.	WALK IN CLOSET
FIN.	FINISH	O/	OVER	W.H.	WATER HEATER
F.F.	FINISH FLOOR	PR.	PAIR	W.P.	WEATHER PROOF
F.G.	FIXED GLASS	PAN.	PANTRY	WDW.	WINDOW
FLR.	FLOOR	PLT.	PLATE	W/	WITH
F.J.	FLOOR JOIST	PLYWD.	PLYWOOD	WD.	WOOD
F.M.C.	FLOOR MATERIAL CHANGE	PC	PHOTO CONTROL	W.I.	WROUGHT IRON
FLUOR.	FLUORESCENT	PDR.	POWDER		

CONSULTANTS

ARCHITECT

KNITTER PARTNERS INTERNATIONAL, INC.
20151 S.W. BIRCH STREET, SUITE 100
NEWPORT BEACH, CA 92660
(949) 752-1177 FAX: 752-0151
REP:

STRUCTURE ENGINEERING

GOUVIS ENGINEERING
15 STUDEBAKER
IRVINE, CALIFORNIA 92618
(949) 752-1612
REP: MIKE HOUSHMAND

TITLE 24

GOUVIS ENGINEERING
15 STUDEBAKER
IRVINE, CALIFORNIA 92618
(949) 752-1612
REP: MIKE HOUSHMAND

NOTES

THE IMPLEMENTATION OF THESE PLANS REQUIRE A CONTRACTOR AND / OR SUBCONTRACTOR THOROUGHLY KNOWLEDGEABLE WITH THE APPLICABLE BUILDING CODES AND METHODS OF CONSTRUCTION SPECIFIC TO THIS PRODUCT TYPE AND TYPE OF CONSTRUCTION.

WHEN AN AREA IS FOUND TO BE UNRESOLVED OR IN CONTRADICTION, KNITTER AND ASSOCIATES SHALL BE CONTACTED PRIOR TO COMMENCEMENT OF WORK.

SYMBOLS

BUILDING SECTION REFERENCE

A / 1.4 — SECTION NUMBER / SHEET NUMBER

DETAIL REFERENCE

4 / D1 — DETAIL NUMBER / SHEET NUMBER

KEYNOTE REFERENCE

3 — KEYNOTE NUMBER

REVISION DELTA

2 — REVISION NUMBER

SHEET SCHEDULE

ARCHITECTURAL SCHEDULE

GENERAL

TS	TITLE SHEET
GN1	GENERAL NOTES
GN2	GENERAL NOTES
GN3	FIRE SPERATION COMPLIANCE
ACG-1	ARCHITECTURAL CAL-GREEN REQUIREMENTS

PLAN 1

1.1	SLAB INTERFACE PLAN
1.1.1	SLAB INTERFACE PLAN ADDENDA
1.1.2	SLAB INTERFACE PLAN ADDENDUM
1.2	FLOOR PLAN
1.2.1	FLOOR PLAN ADDENDA
1.2.2	FLOOR PLAN ADDENDUM
1.3	UTILITY PLAN
1.4	SECTIONS
1.5	INTERIOR ELEVATIONS
1.6	ROOF PLAN A
1.6.1	ROOF PLAN B & ROOF PLAN C
1.6.2	ROOF PLAN D
1.7	ELEVATION 'A', FRONT AND LEFT
1.8	ELEVATION 'A', REAR AND RIGHT
1.9	ELEVATION 'B', FRONT AND LEFT
1.10	ELEVATION 'B', REAR AND RIGHT
1.11	ELEVATION 'C', FRONT AND LEFT
1.12	ELEVATION 'C', REAR AND RIGHT
1.13	ELEVATION 'D', FRONT AND LEFT
1.14	ELEVATION 'D', REAR AND RIGHT

PLAN 2

2.1	SLAB INTERFACE PLAN
2.1.1	SLAB INTERFACE PLAN ADDENDA
2.1.2	SLAB INTERFACE PLAN ADDENDUM
2.2	FLOOR PLAN AND OPTION
2.2.1	FLOOR PLAN ADDENDA
2.2.2	FLOOR PLAN ADDENDUM
2.3	UTILITY PLAN AND OPTION
2.4	SECTIONS
2.5	INTERIOR ELEVATIONS
2.6	ROOF PLAN A
2.6.1	ROOF PLAN B & ROOF PLAN C
2.6.2	ROOF PLAN D
2.7	ELEVATION 'A', FRONT AND LEFT
2.8	ELEVATION 'A', REAR AND RIGHT
2.9	ELEVATION 'B', FRONT AND LEFT
2.10	ELEVATION 'B', REAR AND RIGHT
2.11	ELEVATION 'C', FRONT AND LEFT
2.12	ELEVATION 'C', REAR AND RIGHT
2.13	ELEVATION 'D', FRONT AND LEFT
2.14	ELEVATION 'D', REAR AND RIGHT

PLAN 3

3.1	SLAB INTERFACE PLAN
3.1.1	SLAB INTERFACE PLAN ADDENDA
3.1.2	SLAB INTERFACE PLAN ADDENDUM
3.2	FIRST FLOOR PLAN
3.2.1	FIRST FLOOR ADDENDA
3.2.2	FIRST FLOOR ADDENDUM
3.3	SECOND FLOOR PLAN
3.3.1	SECOND FLOOR ADDENDA
3.3.2	SECOND FLOOR ADDENDUM
3.4	FIRST FLOOR UTILITY PLAN
3.5	SECOND FLOOR UTILITY PLAN
3.6	SECTIONS
3.7	INTERIOR ELEVATIONS
3.8	ROOF PLAN A
3.8.1	ROOF PLAN B & ROOF PLAN C
3.8.2	ROOF PLAN D
3.9	ELEVATION 'A', FRONT AND LEFT
3.10	ELEVATION 'A', REAR AND RIGHT
3.11	ELEVATION 'B', FRONT AND LEFT
3.12	ELEVATION 'B', REAR AND RIGHT
3.13	ELEVATION 'C', FRONT AND LEFT
3.14	ELEVATION 'C', REAR AND RIGHT
3.15	ELEVATION 'D', FRONT AND LEFT
3.16	ELEVATION 'D', REAR AND RIGHT

DETAILS

D1	ARCHITECTURAL DETAILS
D2	ARCHITECTURAL DETAILS
D3	ARCHITECTURAL DETAILS
D4	ARCHITECTURAL DETAILS
D5	ARCHITECTURAL DETAILS

74 TOTAL ARCHITECTURAL SHEETS

STRUCTURAL SCHEDULE

PLAN 1

SN-1	STRUCTURAL GENERAL NOTES AND REQUIREMENTS
SN-1A	STRUCTURAL SPECIAL INSPECITON
SN-2	STRUCTURAL DETAIL NOTES
SN-3	STRUCTURAL DETAIL NOTES

PLAN 1

S-1.1	STRUCTURAL FOUNDATION PLAN
S-1.2	STRUCTURAL FLOOR FRAMING PLAN
S-1.3	STRUCTURAL PARTIAL FRAMING PLAN

PLAN 2

S-2.1	STRUCTURAL FOUNDATION PLAN
S-2.2	STRUCTURAL FLOOR FRAMING PLAN
S-2.3	STRUCTURAL PARTIAL FRAMING PLAN / OPT

PLAN 3

S-3.1	STRUCTURAL FOUNDATION PLAN
S-3.2	STRUCTURAL FLOOR FRAMING PLAN
S-3.3	STRUCTURAL PARTIAL FRAMING PLAN
S-3.4	STRUCTURAL PARTIAL FRAMING PLAN
S-3.5	STRUCTURAL PARTIAL FRAMING PLAN

GENERAL / DETAILS

SD-1	STRUCTURAL DETAILS
SD-2	STRUCTURAL DETAILS
SD-3	STRUCTURAL DETAILS
SD-4	STRUCTURAL DETAILS

19 TOTAL STRUCTURAL SHEETS

TITLE 24

T24-MM	TITLE 24
T24.1	TITLE 24
T24.2	TITLE 24
T24.3	TITLE 24

4 TOTAL TITLE 24 SHEETS

KPI Inc.
KNITTER PARTNERS INTERNATIONAL, INC.
architecture & planning
1401 DOVE ST. SUITE 240
NEWPORT BEACH, CA 92660
PHONE: (949) 752-1177
FAX: (949) 752-0151
WWW.KNITTER.COM

©KNITTER PARTNERS INTERNATIONAL
ALL RIGHTS RESERVED 2013

THIS DOCUMENT IS THE PROPERTY AND COPYRIGHT OF KNITTER PARTNERS INTERNATIONAL, INC. AND SHALL NOT BE USE ON ANY OTHER WORK, BE REPRODUCED OR DISCLOSED TO OTHERS EXCEPT BY WRITTEN AUTHORIZATION FROM KNITTER PARTNERS INTERNATIONAL, INC.

NO.	DATE	REVISION
△		
△		
△		
△		
△		

IMAGINE DEVELOPMENT L.L.C.

THE COLONY 65
LANCASTER, CALIFORNIA

LICENSED ARCHITECT
MICHAEL J. KNITTER
C10524
REN. 4-30-15
STATE OF CALIFORNIA

PROJECT INFO

JOB NUMBER	**3036**
PROJECT MGR.	RC
DRAWN BY	STAFF
ISSUE DATE:	10-24-14

SHEET TITLE

TITLE SHEET

SHEET NUMBER

TS

NOTE:
STRUCTURAL ENGINEERING DRAWINGS AND WORK WILL BE PROVIDED BY OTHERS. THIS ARE ARCHITECTURAL DRAWINGS.

DIVISION 1: GENERAL REQUIREMENTS

SECTION 1 - ARCHITECT'S STATUS:

THE ARCHITECT DOES NOT GUARANTEE ANY TRADE OR SUB'S PERFORMANCE, AND NO PROVISIONS OF THE CONTRACT DOCUMENTS SHALL RELIEVE THE TRADES OR SUB'S FROM ANY LIABILITY DUE TO NEGLIGENCE, INCOMPETENCE OR ERRORS OF OMISSION OR COMMISSION OF THE TRADE OR SUB.

THE DRAWINGS AND SPECIFICATIONS REPRESENT THE FINISHED STRUCTURE. THE DESIGN ADEQUACY AND SAFETY OF ERECTION BRACING, SHORING, TEMPORARY SUPPORTS, ETC., IS THE SOLE RESPONSIBILITY OF THE CONTRACTOR AND HAS NOT BEEN CONSIDERED BY THE STRUCTURAL ENGINEER. THE BUILDER/ OWNER IS RESPONSIBLE FOR THE STABILITY OF THE STRUCTURE PRIOR TO THE APPLICATION OF ALL SHEAR WALLS, ROOF AND FLOOR DIAPHRAGMS AND FINISH MATERIALS. HE SHALL PROVIDE THE NECESSARY BRACING TO PROVIDE STABILITY PRIOR TO THE APPLICATION OF THE AFOREMENTIONED MATERIALS.

OBSERVATION VISITS TO THE JOB SITE BY THE ARCHITECT/ENGINEER DO NOT INCLUDE INSPECTION OF CONSTRUCTION PROCEDURES. THE BUILDER IS SOLELY RESPONSIBLE FOR ALL CONSTRUCTION METHODS AND FOR SAFETY CONDITIONS AT THE WORKSITE. THESE VISITS SHALL NOT BE CONSTRUED AS CONTINUOUS AND DETAILED INSPECTIONS.

SECTION 1-B CODES:

ALL CODES HAVING JURISDICTION SHALL BE OBSERVED STRICTLY IN THE CONSTRUCTION OF THE PROJECT INCLUDING ALL APPLICABLE CODES. BUILDER SHALL VERIFY ALL CODE REQUIREMENTS BEFORE THE COMMENCEMENT OF CONSTRUCTION AND BRING ANY DISCREPANCIES BETWEEN CODE REQUIREMENTS AND THE CONSTRUCTION DOCUMENTS TO THE ATTENTION OF THE ARCHITECT. A PARTIAL LIST OF APPLICABLE CODES IS LISTED ON THE COVER SHEET

SECTION 1-C ERRORS AND OMISSIONS:

ERRORS AND OMISSIONS WHICH OCCUR IN CONTRACT DOCUMENTS SHALL BE BROUGHT TO THE ATTENTION OF THE ARCHITECT . FIRST BY PHONE OR BY FAX AND THEN IN WRITING. WRITTEN INSTRUCTIONS SHALL BE OBTAINED BEFORE PROCEEDING WITH THE WORK. THE BUILDER OR SUB SHALL BE HELD RESPONSIBLE FOR THE RESULTS OF ANY ERRORS, DISCREPANCIES OR OMISSIONS OF WHICH THE BUILDER OR SUB FAILED TO NOTIFY THE ARCHITECT BEFORE CONSTRUCTION AND/OR FABRICATION OF THE WORK.

SECTION 1-D JOB CONDITIONS:

THE BUILDER AND SUBCONTRACTOR SHALL VERIFY ALL DIMENSIONS AND JOB CONDITIONS AT THE JOB SITE SUFFICIENTLY IN ADVANCE OF WORK TO BE PERFORMED TO ASSURE THE ORDERLY PROGRESS OF THE WORK. THE ARCHITECT OR ENGINEER SHALL BE NOTIFIED OF ANY DISCREPANCY BY PHONE, FAX AND WRITTEN MESSAGE.

NOTED DIMENSIONS TAKE PRECEDENCE OVER SCALE. THE BUILDER OR SUBCONTRACTOR SHALL REPORT TO PROJECT SUPERINTENDENT ALL CONDITIONS WHICH PREVENT THE PROPER EXECUTION OF THEIR WORK.
NOTE: ALL DRAWINGS ARE DRAWN TO THE SCALE OF 1/4" = 1'-0"
UNLESS IT IS NOTED OTHERWISE ROOF PLANS SHOWN ON THE ELEVATION SHEETS ARE 1/8"-1'-0". DETAILS ARE NOT TO ANY GIVEN SCALE

SECTION 1-E KNOWLEDGE TO COMPLETE CONSTRUCTION:

THE SCOPE OF THIS SET OF PLANS IS SUFFICIENT TO OBTAIN A BUILDING PERMIT; HOWEVER, ALL MATERIALS AND METHODS OF CONSTRUCTION NECESSARY TO COMPLETE CONSTRUCTION ARE NOT NECESSARILY DESCRIBED. THE PLANS DELINEATE AND DESCRIBE ONLY LOCATIONS, DIMENSIONS, TYPES OF MATERIALS AND GENERAL METHODS OF ASSEMBLY OR FASTENING. THEY ARE NOT INTENDED TO SPECIFY PARTICULAR PRODUCTS OR METHODS OF ASSEMBLY OF ANY SPECIFIC MATERIAL OR PRODUCT. THE IMPLEMENTATION OF THE PLAN REQUIRES A BUILDER AND/OR SUBCONTRACTOR THOROUGHLY KNOWLEDGEABLE WITH THE APPLICABLE BUILDING CODES AND METHODS OF CONSTRUCTION SPECIFIC TO THIS PRODUCT TYPE AND TYPE OF CONSTRUCTION.

SECTION 1-F CLEAN UP:

CONTRACTORS SHALL MAINTAIN THE PREMISES CLEAN AND FREE OF ALL TRASH, DEBRIS AND SHALL PROTECT ALL ADJACENT WORK FROM DAMAGE. SOILING, PAINT OVERSPRAY, ETC. ALL FIXTURES, EQUIPMENT, GLAZING, FLOORS, ETC. SHALL BE LEFT CLEAN AND READY FOR OCCUPANCY UPON COMPLETION OF THE PROJECT.

GENERAL:

A. NOTES AND DETAILS ON DRAWINGS SHALL TAKE PRECEDENCE OVER THESE GENERAL NOTES.

B. NAMED PRODUCTS: THE ARCHITECT MAKES NO GUARANTEE FOR PRODUCTS IDENTIFIED BY TRADE NAME OR MANUFACTURER.

C. SCOPE: THE BUILDER AND SUBCONTRACTORS SHALL FURNISH ALL LABOR, EQUIPMENT, AND MATERIAL INDICATED ON THE PLANS AND REASONABLY INFERRED OR REQUIRED BY THE APPLICABLE CODES.

D. SUBSTITUTION: NO SUBSTITUTIONS SHALL BE MADE WITHOUT OWNER'S WRITTEN AUTHORIZATION. ANY SUBSTITUTION SHALL BE MADE KNOWN TO OWNER/BUILDER AND ARCHITECT IN ADVANCE TO AVOID ANY DELAY IN THE PROJECT SCHEDULE. THE GENERAL CONTRACTOR AND ANY SUBCONTRACTOR SHALL NOT MAKE STRUCTURAL SUBSTITUTIONS OR CHANGES WITHOUT PRIOR WRITTEN AUTHORIZATION FROM THE STRUCTURAL ENGINEER AND WRITTEN NOTIFICATION TO THE ARCHITECT.

E. CHANGES: ANY ADDITION, DELETION, OR CHANGE IN THE SCOPE OF THE WORK DESCRIBED BY THE PLANS SHALL BE BY WRITTEN CHANGE ORDER ONLY. ANY APPROVAL FROM THE BUILDING OFFICIAL FOR A CHANGE IN THE WORK SHALL BE THE RESPONSIBILITY OF THE GENERAL CONTRACTOR.

F. STRUCTURAL OBSERVATION: OWNERS SHALL BE RESPONSIBLE TO FULFILL THE REQUIREMENTS OF SECTION 1710 OF THE CBC TO EMPLOY HIS DESIGNATED ENGINEER TO MAKE SITE VISITS TO OBSERVE GENERAL COMPLIANCE WITH THE APPROVED STRUCTURAL PLANS AND CHANGE ORDERS. THE ENGINEER SHALL SUBMIT A STATEMENT IN WRITING TO THE BUILDING OFFICIAL STATING THE SITE VISITS HAVE BEEN MADE AND THAT ANY DEFICIENCIES NOTED HAVE BEEN CORRECTED TO THE EXTENT AS DETERMINED BY THE BUILDING DEPARTMENT.

G. INFILTRATION CONTROL: ALL OPENINGS IN THE BUILDING ENVELOPE MUST BE CAULKED, GASKETED OR WEATHER STRIPPED IN ACCORDANCE WITH MANDATORY STATE ENERGY REQUIREMENTS.

FOUNDATIONS: INSTALL AS INCLUDED IN THE STRUCTURAL DRAWINGS AND AS AMENDED BY THE FINAL SOILS REPORT.

A. REFER TO THE ARCHITECTURAL DRAWINGS FOR MOLDS, GROOVES, ORNAMENTS, CLIPS OR GROUNDS REQUIRED TO BE CAST IN CONCRETE AND FOR LOCATIONS OF FLOOR FINISHES AND SLAB DEPRESSIONS.

DIVISION 2: SITEWORK

SECTION 2-A EARTHWORK:

A. PERFORM ALL WORK IN THIS SECTION IN CONFORMANCE WITH THE FINAL SOILS COMPACTION, GEOLOGICAL REPORTS AND APPROVED ENGINEERED GRADING PLAN AS ACCEPTED BY THE BUILDING DEPARTMENT.

SECTION 2-A GRADING:

A. SEE CIVIL ENGINEERING DRAWINGS AND NOTES.

B. SITE GRADING. THE GROUND IMMEDIATELY ADJACENT TO THE FOUNDATION SHALL BE SLOPED AWAY FROM THE BUILDING AT A SLOPE OF 5% FOR A MINIMUM DISTANCE OF 10 FEET MEASURED PERPENDICULAR TO THE FACE OF THE WALL. IF PHYSICAL OBSTRUCTIONS OR LOT LINES PROHIBIT 10 FEET OF HORIZONTAL DISTANCE, A 5% SLOPE SHALL BE PROVIDED TO AN APPROVED ALTERNATIVE METHOD OF DIVERTING WATER AWAY FROM THE FOUNDATION SWALES USED FOR THIS PURPOSE SHALL BE SLOPED A MINIMUM OF 2% WHERE LOCATED WITHIN 10 FEET OF THE BUILDING FOUNDATION. IMPERVIOUS SURFACES WITHIN 10 FEET OF THE BUILDING FOUNDATION SHALL BE SLOPED A MINIMUM OF 2% AWAY FROM THE BUILDING. CBC SEC. 1803.3

DIVISION 3: CONCRETE

GENERAL:

A. REFER TO STRUCTURAL DRAWINGS BY OTHERS FOR CONCRETE SPECIFICATIONS NOTES, DETAILS AND EMBEDMENTS TO BE USED ON THIS PROJECT FOR STRUCTURAL SLABS AND FOOTINGS.

B. IT SHALL BE THE RESPONSIBILITY OF THE SUBCONTRACTOR TO LOCATE ALL EXISTING UTILITIES WHETHER SHOWN HEREON OR NOT AND TO PROTECT THEM FROM DAMAGE. THE SUBCONTRACTOR SHALL BEAR ALL EXPENSE OF REPAIR OR REPLACEMENT IN CONJUNCTION WITH THE PROSECUTIONS OF THIS WORK.

C. SOILS ENGINEER SHALL INSPECT FOUNDATION PRIOR TO POURING CONCRETE AND VERIFY SOIL BEARING PRESSURE AS RECOMMENDED IN THE SOILS REPORT.

D. TOP OF CONCRETE SLABS TO BE MINIMUM 6 inch (8 inch-HUD) ABOVE FINISH GRADE.

E. CONTRACTOR SHALL HAVE COUNTY APPROVED TRUSS PLANS ON THE JOB PRIOR TO FOUNDATION INSPECTION.

SECTION 3-A EXT. FLAT WORK AND NONSTRUCTURAL CONCRETE.

CONCRETE: 2,500 PSI AT 28 DAYS, 7.5 GALLONS WATER MAXIMUM PER SACK OF CEMENT (U.N.O.)

PORTLAND CEMENT: ASTM C150-12 AND C595-12 TYPE I OR II, LOW ALKALI, MILL TESTED AND CERTIFIED. USE TYPE V CEMENT AND MAXIMUM WATER TO CONCRETE RATIO OF .45
FOR SOIL CONTAINING SULFATE CONCENTRATIONS OF MORE THAN 0.2 PERCENT ON ALL STRUCTURAL CONCRETE (REFER TO SOILS REPORT).

WATER: FROM DOMESTIC SOURCES, CLEAN AND FREE FROM ALL ORGANIC OR OTHER DELETERIOUS MATERIALS.

LIGHT WEIGHT AGGREGATES: ASTM C330-64 AND C332-66.
SAND AND STRUCTURAL AGGREGATES: ASTM C-331IA.

ADMIXTURE: PER ASTM C260-60, C494-71 AND C618-77.

WATERPROOFING: SHALL BE INSTALLED PER MFR'S SPECS. A PROPER SYSTEM SHALL INCLUDE WATERPROOF MEMBRANE, SUBSURFACE FOUNDATION DRAIN , POROUS BACKFILL(OR DRAIN SCREEN) AND PROTECTION BOARD.

SECTION 3 - B REINFORCING STEEL:

WORKMANSHIP: ALL WORK SHALL COMPLY WITH THE REQUIREMENTS SET FORTH IN THE CURRENT CBC CODE.

DIVISION 4: MASONRY

SECTION 4-A MANUFACTURED / "STUCCO" STONE:

A MANUFACTURED STONE VENEER SHALL BE INSTALLED PER

SECTION 4-B BRICK MASONRY AND PAVERS:

A. MASONRY SHALL COMPLY WITH CBC CHAPTER 21.

B. MASONRY VENEER SHALL COMPLY WITH CBC CHAPTER 14.

C. REINFORCING SHALL BE ACCURATELY PLACED, AND HELD IN POSITION TOP AND BOTTOM.

MASONRY VENEER: PROVIDE ONE INCH MORTAR BETWEEN MASONRY VENEER AND "DIAMOND MESH METAL LATH" AS MANUFACTURED XM INTL. (OR TREE ISLAND WIRE) ICC ER # 2267

DIVISION 5: METALS, STRUCTURAL AND MISC.

SECTION 5-A MISCELLANEOUS AND STRUCTURAL METALS:

WORKMANSHIP: ALL WORK SHALL COMPLY WITH A.I.S.C. "MANUAL OF STEEL CONSTRUCTION", LATEST EDITION, UNLESS MORE EXACTING REQUIREMENTS ARE SPECIFIED IN THE CONTRACT DOCUMENTS OR STRUCTURAL DRAWINGS.

MATERIALS:

A. STRUCTURAL STEEL AND MISCELLANEOUS IRON SHALL CONFORM TO ASTM A-36. (CBC 1804.3.1)

B. DRYER VENT TO OUTSIDE AIR PER MANUFACTURER'S SPECIFICATIONS AND LOCAL JURISDICTIONAL REQUIREMENTS.

PIPE: STANDARD STEEL PIPE-ASTM A53-64A, GRADE B OR AS SPECIFICALLY NOTED ON THE DRAWINGS.

MISCELLANEOUS ITEMS: MISCELLANEOUS METAL ITEMS AND THEIR RELATED COMPONENTS ARE NOT NECESSARILY INDIVIDUALLY DESCRIBED. THE MOST IMPORTANT AND THOSE REQUIRING DETAILED DESCRIPTION ARE SPECIFIED. MISCELLANEOUS ITEMS NOT DESCRIBED SHALL BE FURNISHED AND INSTALLED IN ACCORDANCE WITH THE INTENT OF THE DRAWINGS AND SPECIFICATION AND AS REQUIRED TO COMPLETE THE WORK.

SHOP DRAWINGS: CONTRACTOR SHALL SUBMIT SHOP DRAWINGS OF DECORATIVE IRON WORK TO BUILDER FOR REVIEW FOR CONFORMANCE WITH VISUAL DESIGN CONCEPT PRIOR TO FABRICATION.

DIVISION 6: WOOD FRAME

SECTION 6-A ROUGH CARPENTRY
SEE STRUCTURAL ENGINEER OF RECORD FOR ALL FRAMING MEMBERS AND SPECIFICATIONS

ATTIC SPACES: ENCLOSED ATTICS AND ENCLOSED RAFTER SPACES FORMED WHERE CEILINGS ARE APPLIED DIRECTLY TO THE UNDERSIDE OF ROOF FRAMING MEMBERS SHALL HAVE CROSS VENTILATION FOR EACH SEPARATE SPACE BY VENTILATING OPENINGS PROTECTED AGAINST THE ENTRANCE OF RAIN AND SNOW. BLOCKING AND BRIDGING SHALL BE ARRANGED SO AS NOT TO INTERFERE WITH THE MOVEMENT OF AIR. A MINIMUM OF 1 INCH (25 MM) OF AIRSPACE SHALL BE PROVIDED BETWEEN THE INSULATION AND THE ROOF SHEATHING. THE NET FREE VENTILATING AREA SHALL NOT BE LESS THAN 1/150 OF THE AREA OF THE SPACE VENTILATED, WITH 50 PERCENT OF THE REQUIRED VENTILATING AREA PROVIDED BY VENTILATORS LOCATED IN THE UPPER PORTION OF THE SPACE TO BE VENTILATED AT LEAST 3 FEET (914 MM) ABOVE EAVE OR CORNICE VENTS WITH THE BALANCE OF THE REQUIRED VENTILATION PROVIDED BY EAVE OR CORNICE VENTS.
EXCEPTION: THE MINIMUM REQUIRED NET FREE VENTILATING AREA SHALL BE 1/300 THE AREA OF THE SPACE VENTILATED, PROVIDED A VAPOR RETARDER HAVING A TRANSMISSION RATE NOT EXCEEDING 1 PERM IN ACCORDANCE WITH ASTM E 96 IS INSTALLED ON THE WARM SIDE OF THE ATTIC INSULATION AND PROVIDED 50 PERCENT OF THE REQUIRED VENTILATING AREA PROVIDED BY VENTILATORS LOCATED IN THE UPPER PORTION OF THE SPACE TO BE VENTILATED AT LEAST 3 FEET (914 MM) ABOVE EAVE OR CORNICE VENTS, WITH THE BALANCE OF THE REQUIRED VENTILATION PROVIDED BY EAVE OR CORNICE VENTS. CBC, SEC. 1203.2

SECTION 6-C WOOD TRUSSES

A. THE BUILDER SHALL COORDINATE THE INSTALLATION OF ALL CEILING DROPS WITH THE TRUSS MANUFACTURER AND THE FRAMING CONTRACTOR.

1. PREFABRICATED TRUSSES SHALL BE ASSEMBLED UNDER THE APPROVAL OF AN INDEPENDENT TESTING AGENCY PER CBC CHAPTER 23. THE MANUFACTURER SHALL BE AN APPROVED FABRICATOR, AS CURRENTLY LISTED BY ICC.

2. MANUFACTURER SHALL SUPPLY TO THE ARCHITECT/ENGINEER AND CONTRACTOR FOR SUBMITTAL TO THE BUILDING DEPARTMENT CALCULATIONS AND SHOP DRAWINGS FOR APPROVAL PRIOR TO FABRICATION. ALL CALCULATIONS AND SHOP DRAWINGS SHALL BE SIGNED BY A CALIFORNIA REGISTERED ENGINEER. IT SHALL BE THE RESPONSIBILITY OF THE MANUFACTURER TO OBTAIN BUILDING DEPARTMENT APPROVAL OF CALCULATIONS AND SHOP DRAWINGS PRIOR TO ISSUANCE OF BUILDING PERMIT.

3. BUILDER SHALL HAVE APPROVED TRUSS PLANS ON THE JOB PRIOR TO COMMENCEMENT OF CONSTRUCTION. THE TRUSS MANUFACTURER SHALL SUBMIT CALCULATIONS, SHOP DRAWINGS, DETAILS, BRIDGING AND ERECTION BRACING SIGNED BY A REGISTERED ENGINEER TO THE BUILDING DEPARTMENT AND STRUCTURAL ENGINEER, FOR THEIR REVIEW PRIOR TO FABRICATION. ONE SET OF SHOP DRAWINGS SHALL BE SUBMITTED TO THE ARCHITECT FOR REVIEW FOR CONFORMANCE WITH THE VISUAL DESIGN CONCEPT PRIOR TO TRUSS FABRICATION.

B. THE TRUSS MANUFACTURER SHALL BE RESPONSIBLE FOR FRAMING AROUND OPENINGS IN THE ROOF OR FLOOR, SHALL PROVIDE LADDER FRAMING AT NONSTANDARD TRUSS MEMBER SPACING TO KEEP WITHIN THE SPAN RATING OF THE ROOF OR FLOOR SHEATHING AND SHALL SUBMIT DETAILS AND HANGERS AS REQUIRED.

C. THE TRUSS MANUFACTURER SHALL BE RESPONSIBLE FOR VERIFYING THE LOCATION, SIZE AND WEIGHT OF ATTIC LOCATED MECHANICAL EQUIPMENT AND INCORPORATE SUCH INFORMATION INTO THE DESIGN AND CALCULATION OF TRUSSES SUPPORTING IT.

D. NON-BEARING WALLS SHALL BE HELD SHORT TO ALLOW FOR RAFTER-TRUSS DEFLECTION WITH CLIPS APPROVED BY THE STRUCTURAL ENGINEER TO STABILIZE THE WALL.

E. TRUSS MANUFACTURER SHALL PROVIDE MEMBERS OF ADEQUATE BEARING AREA IN SUCH A WIDTH TO INSURE AGAINST OVER-STRESSING OF SUPPORTING TIMBER, MULTIPLE JOISTS, GIRDERS AND PLATES OR PROVIDE BEARING PLATES AND DETAILS TO DO SAME.

F. THE GENERAL CONTRACTOR SHALL COORDINATE WITH THE TRUSS MANUFACTURER, FRAMING, ELECTRICAL, PLUMBING AND MECHANICAL CONTRACTORS AT FIRE PROTECTED AREAS TO MAINTAIN REQUIRED FIRE PROTECTION WITHOUT PENETRATIONS UNLESS ALLOWED BY CODE AND LOCAL JURISDICTION.

G. WHERE TRUSS FRAMING AND CONVENTIONAL FRAMING OCCUR TOGETHER IN A CONTINUOUS ROOF PLANE, THE GENERAL CONTRACTOR SHALL COORDINATE WITH THE TRUSS MANUFACTURER AND FRAMING CONTRACTOR TO ELIMINATE DIFFERENTIAL DEFLECTION BETWEEN THE TRUSS AND CONVENTIONAL FRAMING MEMBERS.

H. WHERE TRUSS FRAMING AND CONVENTIONAL FRAMING OCCUR TOGETHER IN THE SAME ROOF, THE PLATE HEIGHT AS NOTED WILL BE MAINTAINED FOR THE DEEPER CONVENTIONAL MEMBER WITH THE BOTTOM TRUSS CORD MATCHING THE RAFTER SEAT CUT. TRUSS MANUFACTURER SHALL PROVIDE HEEL AS REQUIRED TO MAINTAIN A CONTINUOUS ROOF PLANE ALIGNMENT.

SECTION 6 - B FINISH CARPENTRY:

MILLWORK: MANUFACTURE MILLWORK AND CASEWORK PER MANUAL OF MILLWORK AND WOODWORK INSTITUTE OF CALIFORNIA, CUSTOM GRADE UNLESS NOTED OTHERWISE.

INSTALLATION: INSTALL ALL SHELVING, CASEWORK, MILLWORK, DOORS, HARDWARE, RAILING, TRIM, COUNTERS, UTILITY BACKBOARDS AND OTHER FINISH CARPENTRY.

DIVISION 7: ROOFING
INSTALL ROOFING MATERIAL AS PER CODE AND MANUFACTURERS MANUFACTURERS RECOMMENDATIONS

SECTION 7-A ROOFING AND MEMBRANES:

SCOPE: FURNISH AND INSTALL ROOFING AND WATERPROOFING WORK COMPLETE, INCLUDING CANT STRIPS AND INCORPORATING OTHER TRADES FLASHING, SLEEVES AND JACKS.

INSTALLATION: INSTALL ROOFING AND ALL CORROSION RESISTANT METAL FLASHINGS PER MANUFACTURER'S RECOMMENDATIONS INCLUDING THE USE OF FASTENERS AND ANCHORING DEVICES IN HIGH WIND AREAS, AND PER CBC, CHAPTER 15, CAREFULLY INCORPORATING FLASHING SCUPPERS, JACKS, SLEEVES, ROOF DRAINS, SKYLIGHTS, ETC., SUPPLIED BY OTHERS.

ROOFING CONTRACTOR SHALL BE RESPONSIBLE FOR THE WEATHER-TIGHT INTEGRITY OF THE ENTIRE ROOFING SYSTEM, INCLUDING , BUT NOT LIMITED TO : MEMBRANES, ROOFING, WALL/ROOF FLASHINGS, JACKS, VENTS, UNDERLAYMENT AND SHEATHING.

SPECIAL CONDITIONS:
A. PROVIDE CANT STRIPS AT ALL VERTICAL SURFACES.

B. PROVIDE CRICKETS AS INDICATED, AND AS NECESSARY FOR PROPER WATER DRAINAGE AND TO REDIRECT CHANNELED OR RUNOFF WATER AWAY FROM VERTICAL SURFACES.

MATERIALS: REFER TO PLANS FOR TYPE AND MANUFACTURER OF ROOFING.

SECTION 7-B SHEET METAL:

MEASUREMENTS: VERIFY ALL DIMENSIONS SHOWN ON DRAWINGS BY TAKING FIELD MEASUREMENTS; PROPER FIT AND ATTACHMENT ON ALL PARTS IS REQUIRED.

STANDARDS: ALL WORK INCLUDED IN THIS SECTION SHALL BE PERFORMED IN A WEATHER TIGHT MANNER CONSISTENT WITH GOOD ROOFING AND WEATHERPROOFING PRACTICE". FOLLOW SIDING , WINDOW AND ROOFING MANUFACTURERS' GUIDELINES "

FLASHING AND COUNTERFLASHING: EXTERIOR OPENINGS EXPOSED TO THE WEATHER SHALL BE FLASHED IN SUCH A MANNER AS TO MAKE THEM WEATHERPROOF. FLASHING AND COUNTER FLASHING SHALL BE PROVIDED AT THE JUNCTION OF THE ROOF AND VERTICAL SURFACES (WALLS, ETC.) PER CBC SECTION 1503.2.).

ALL PARAPETS SHALL BE PROVIDED WITH COPING OF APPROVED MATERIALS. ALL FLASHING, COUNTER FLASHING AND COPING, WHEN OF METAL, SHALL BE OF NOT LESS THAN NO. 26 U.S. GAUGE CORROSION-RESISTANT METAL PER CBC SECTION 1503.3.3.

ROOF VALLEY FLASHINGS SHALL BE PROVIDED FOR SHINGLES AS FOLLOWS:

A. ASPHALT SHINGLES: THE ROOF VALLEY FLASHING SHALL BE THE SAME AS REQUIRED FOR WOOD SHINGLES OR SHALL BE OF LACED ASPHALT SHINGLES APPLIED IN AN APPROVED MANNER WITH AN UNDERLAYMENT OF NOT LESS THAN TYPE 30 FELT EXTENDING 18 inch FROM THE CENTER LINE EACH WAY.
" ALL VALLEYS SHALL BE CLOSED / WOVEN TYPE FOR SOUTHERN CALIFORNIA".

B. CLAY AND CONCRETE TILE: THE ROOF VALLEY FLASHING SHALL BE PROVIDED OF NOT LESS THAN 26. GA. GALVANIZED SHEET CORROSION-RESISTANT METAL APPLIED OVER AN UNDERLAYMENT OF NOT LESS THAN 30# A.S.T.M. FELT. THE METAL SHALL EXTEND AT LEAST 12 inch FROM THE CENTERLINE EACH WAY AND SHALL HAVE A SPLASH DIVERTER RIB NOT LESS THAN 1 inch HIGH AT THE FLOW LINE FORMED AS PART OF THE FLASHING. SECTIONS OF FLASHING SHALL HAVE AN END LAP OF NOT LESS THAN 4 inch.

DO NOT NAIL GREATER THAN 1 INCH INTO ANY VALLEY; DO NOT BLOCK WITH BATTENS. USE BATTEN EXTENDERS , WIRE TIES , OR OTHER TO COMPLY WITH THIS REQUIREMENT. USE CRIMPED EDGES WHERE UNDERLAYMENT FELTS ARE INSTALLED OVER VALLEY METAL. ALL COMPONENTS SHALL BE INSTALLED PER MANUFACTURER'S SPECIFICATION'S AND ICC REPORT.

FLASH AND COUNTER FLASH AT ALL ROOF TO WALL CONDITIONS. 6.1. FLASH AND CAULK WOOD BEAMS AND OUTLOOKERS PROJECTED THROUGH EXTERIOR WALLS OR ROOF SURFACES. PROVIDE SOLID BLOCKING AROUND BEAM PENETRATIONS FOR SUPPORT OF METAL FLASHING COLLARS.

WHERE EXPOSED TO WEATHER, FLASH ALL HORIZONTAL WOOD TRIM BUTTING TO EXTERIOR FINISH.

WORKMANSHIP:

1. WORK SHALL BE ACCURATELY FABRICATED TO MATCH DETAIL AND FITTED TO JOB CONDITIONS.

2. MOLDED AND BRAKE-FORMED MEMBERS SHALL BE FINISHED TRUE AND STRAIGHT WITH SHARP LINES AND ANGLES.

3. LOCK SEAMS FLAT AND TRUE TO LINE, 1/2 inch WIDE, SWEATED FULL WITH SOLDER WHERE OVERLAPPING DOES NOT PROVIDE WATER TIGHT CONNECTION.
" ALTERNATE" USE A SEALANT SUCH AS VULKEM 116 WITH A 4-INCH MINMUM OVERLAP .

4. SHEET METAL WORK SHALL BE DESIGNED TO PROVIDE COMPLETE WEATHER TIGHT AND WATERPROOF CONNECTIONS.

5. ALL GALVANIZED METAL SHALL BE SHOP PRIMED WITH ONE COAT OF ZINC DUST-ZINC OXIDE PRIMER OVER ALL SURFACES AND AS RECOMMENDED BY METAL SPECIALIST.

6. SHEET METAL USED AS FLASHING ADJACENT TO WOOD SURFACES SHALL BE SET IN HIGH QUALITY SEALANT TO INSURE WATERPROOFING BETWEEN SUCH MATERIALS.

F.A.U. COMBUSTION AIR: PROVIDE COMBUSTION AIR PER MANUFACTURER'S SPECIFICATIONS AND CMC CHAPTER 7.

DRYER VENTS: VENT DRYER TO OUTSIDE AIR WITH MINIMUM 4 INCH DIAMETER SMOOTH METAL DUCT WITH BACK DRAFT DAMPER PER CMC 504.3. MANUFACTURERS SPECIFICATIONS AND LOCAL JURISDICTIONAL REQUIREMENTS. LENGTH LIMITATION. UNLESS OTHERWISE PERMITTED OR REQUIRED BY THE MANUFACTURE'S INSTALLATION INSTRUCTIONS AND APPROVED BY THE BUILDING OFFICIAL, DOMESTIC DRYER MOISTURE-EXHAUST DUCTS SHALL NOT EXCEED A TOTAL COMBINED HORIZONTAL AND VERTICAL LENGTH OF 14 FEET, INCLUDING TWO 90-DEGREE ELBOWS. TWO FT. BE DEDUCTED FOR EACH 90-DEGREE ELBOW IN EXCESS OF TWO. CMC 504.3.2.2

SECTION 7-C INSULATION:

SEE ENERGY COMPLIANCE SHEET FOR CALIFORNIA ENERGY TITLE 24 REQUIREMENTS.

1. THE FOLLOWING OPENINGS IN THE BUILDING ENVELOPE MUST BE CAULKED, SEALED OR WEATHER-STRIPPED:

A. EXTERIOR JOINTS AROUND WINDOW AND DOOR FRAMES, BETWEEN WALL PANELS, WALL SOLE PLATES AND FLOORS.

B. OPENINGS FOR PLUMBING, ELECTRICAL AND GAS LINES IN EXTERIOR AND INTERIOR WALLS, CEILINGS AND FLOORS.

C. OPENINGS IN THE ATTIC FLOOR (SUCH AS WHERE CEILING PANELS MEET INTERIOR AND EXTERIOR WALLS AND MASONRY FIREPLACES).

D. ALL OTHER SUCH OPENINGS IN THE BUILDING ENVELOPE.

ALTERNATIVE APPROVED TEGHNIQUES MAY BE USED TO MEET THE STANDARD CAULKING REQUIREMENTS FOR EXTERIOR WALLS INCLUDING, BUT NOT LIMITED TO, CONTINUOUS STUCCO, CAULKING OR TAPING OF ALL JOINTS BETWEEN WALL COMPONENTS (E.G., BETWEEN SLATS IN WOOD SLAT WALLS), BUILDING WRAPS OR RIGID WALL INSULATION.

2. BUILDER AND INSULATION INSTALLER ARE TO PROVIDE A CERTIFICATE OF INSULATION AND POST IN THE BUILDING IN A CONSPICUOUS LOCATION.

3. SEE PLANS FOR PARTY WALL CONDITIONS.
EXTERIOR WALL COVERINGS:

WEATHER RESISTIVE BARRIER: PROVIDE ONE (1) LAYER # 15 ASPHALT SATURATED FELT MINIMUM UNDER ALL EXTERIOR FINISHES. CBC 1404.2
PROVIDE TWO (2) LAYERS OF # 15 BUILDING PAPER AT SOLID SHEATHING PER CBC SECTION 2510.6

MATERIALS:
1. ALL EXTERIOR MATERIALS SHALL CONFORM TO THE REQUIREMENTS OF THE CBC, APPLICABLE EDITION, STATE AND LOCAL CODES.

2. WHERE HARDBOARD SIDING IS USED FOR COVERING THE OUTSIDE OF EXTERIOR WALLS, IT SHALL CONFORM TO THE CBC, APPLICABLE EDITION, STATE AND LOCAL CODES.
LAP SIDING SHALL BE INSTALLED HORIZONTALLY AND APPLIED TO SHEATHED OR UNSHEATHED WALLS. CORNER BRACING SHALL BE INSTALLED TO CONFORM WITH CBC REQUIREMENTS.
A WEATHER-RESISTIVE BARRIER (15# BUILDING PAPER) SHALL BE INSTALLED UNDER LAP SIDING. ALL FASTENERS USED FOR THE ATTACHMENT OF SIDING SHALL BE HOT DIPPED GALVANIZED STAINLESS STEEL , COPPER OR ALUMINUM .
NAIL SIZE AND SPACING SHALL MEET CBC REQUIREMENTS AND SHALL PENETRATE FRAMING 1 1/2 inch.
LAP SIDING SHALL OVERLAP 1 inch MINIMUM AND BE NAILED THROUGH BOTH COURSES AND INTO FRAMING MEMBERS WITH NAILS LOCATED 1/2 inch FROM BOTTOM OF THE OVERLAPPED COURSE, OR TO MANUFACTURER'S SPECIFICATIONS.

BALCONY AND DECK :

DECKS, BALCONIES, LANDINGS, EXTERIOR STAIRWAYS AND SIMILAR SURFACES EXPOSED TO THE WEATHER SHALL SHALL BE FULLY PAINTED AND SEALED.

ALL EXTERIOR DECKS AND BALCONIES EXPOSED TO WEATHER SHALL BE CONSTRUCTED WITH SUFFICIENT SLOPE (MINIMUM 3/8 inch PER FOOT) TO ENSURE ADEQUATE DRAINAGE.

UNLESS REQUIRED TO BE HANDICAP ACCESSIBLE, PROVIDE A MINIMUM 2 INCH DROP FROM FINISHED INTERIOR FLOOR TO THE HIGHEST FLOOR LEVEL ON ANY ADJOINING DECK OR BALCONY.

BUILDER SHALL BE RESPONSIBLE FOR THE WEATHER INTEGRITY OF THE ENTIRE HORIZONTAL MEMBRANE INCLUDING TRANSITION FLASHINGS , PENETRATIONS, ETC. COATING THICKNESS SHALL BE AT LEAST THAT AS REQUIRED BY MANUFACTURER. NO REFLECTIVE SEAMS IN PLY OR METAL SHALL BE VISIBLE UPON COMPLETION.

DIVISION 8: DOORS, WINDOWS AND GLASS

ALL EXTERIOR DOORS AND WINDOW ASSEMBLIES SHALL COMPLY WITH THE REQUIREMENTS OF CBC SECTION 1714.5 (DESIGN PRESSURE RATING), AND SHALL BE LABELED STATING THE NAME OF THE MANUFACTURER AND THAT THE ASSEMBLY COMFORMS TO AAMA/WDMA/CSA101/I.S.2/A440.

GLASS AND GLAZING SHALL BE DESIGNED TO RESIST WIND LOADS IN CBC SEC. 1609 FOR COMPONENTS AND CLADDING. LOAD RESISTANCE SHALL BE DETERMINED IN ACCORDANCE WITH ASTM E 1300. CBC SEC. 2404.1

SECTION 8-A WOOD DOORS:

STANDARDS: ALL DOORS SHALL COMPLY WITH THE REQUIREMENTS OF THE WOODWORK INSTITUTE OF CALIFORNIA, STANDARD GRADE (U.N.O.); TITLE 24, CALIFORNIA ADMINISTRATIVE CODE.

SCOPE: FURNISH AND INSTALL ALL DOORS COMPLETE AS INDICATED ON PLANS. THE GENERAL CONTRACTOR SHALL COORDINATE DOOR SUPPLIER AND FRAMING CONTRACTOR FOR INSTALLATION OF ALL DOORS.

STANDARDS AND INSTALLATION: PER MANUFACTURER'S INSTALLATION RECOMMENDATIONS. ALL EXTERIOR DOORS SHALL COMPLY WITH MANDATORY STATE INFILTRATION STANDARDS.

MEASUREMENTS: VERIFY ALL DIMENSIONS BY TAKING FIELD MEASUREMENTS PRIOR TO INSTALLATION

DIVISION 9: FINISHES (CONT.)

SECTION 9-B GYPSUM WALLBOARD & CEILING BOARD

SCOPE: FURNISH AND INSTALL ALL GYPSUM WALLBOARD WORK COMPLETE. VERIFY ALL SPECIALTY MATERIALS, NAILING AND INSTALLATION SEQUENCING AT SOUND/FIRE ASSEMBLIES AND STRUCTURAL SHEAR WALLS PRIOR TO COMMENCING WORK.

STANDARDS:

A. ALL WORK / ALL COMPLY WITH CHAPTER 25 OF THE CBC

B. ALL WORK AND MATERIALS SHALL COMPLY WITH GYPSUM ASSOCIATION'S "RECOMMENDED SPECIFICATIONS FOR THE APPLICATION AND FINISHING OF GYPSUM WALLBOARD."

WORKMANSHIP:
ALL WORKMANSHIP SHALL BE INSPECTED AND APPROVED BY THE BUILDER OR BUILDER'S REPRESENTATIVE. SPECIAL FINISHES SHALL BE PRE-DETERMINED BY CONTRACT WITH BUILDER AND SUB.

A. ALL JOINTS IN FINISHED SURFACES SHALL BE TAPED AND FINISHED WITH JOINT COMPOUND.

B. PROVIDE METAL TRIM AT ALL EXPOSED EDGES AND EXTERNAL CORNERS.

C. METAL TRIM SHALL BE TIGHT TO WALLBOARD EDGES, PLUMB, LEVEL AND TRUE TO PLANE, SECURELY ATTACHED.

D. CONCEAL EXPOSED NAIL OR SCREW HEADS WITH JOINT COMPOUND.

E. PROTECT ALL EXPOSED WOOD BEAMS, POST, RAILINGS ETC.

F. ALL GYPSUM WALLBOARD AT TUBS TO BE INSTALLED IN SUCH A MANNER THAT THERE ARE NO SURFACES OUT OF ALIGNMENT WITH ADJACENT SURFACES AND THE TRUE PLANE OF THE WALL IS MAINTAINED.

MATERIALS:

A. GYPSUM WALLBOARD AND CEILING BOARD: 1/2 INCH THICK THROUGHOUT UNLESS NOTED OTHERWISE.

B. GYPSUM WALLBOARD AND CEILING BOARD: 5/8 INCH THICK, FIRE RATED "X" WITH TAPED JOINTS AT FIRE/SOUND RATED WALLS AS DETAILED AND AT OTHER WALLS AND CEILINGS WHERE NOTED ON DRAWINGS. PROVIDE MULTIPLE LAYERS AS DETAILED, WITH NAILS SIZED ACCORDINGLY. REFER TO SHEET G3.

C. AT CEILINGS: PROVIDE 5/8 INCH GYPSUM WALLBOARD WHEN FRAMING SPACING EXCEEDS 16 INCH O.C.

D. MOISTURE RESISTANT WALLBOARD AND CEILING BOARD: USE IN WET AREAS AS RECOMMENDED BY GYPSUM BOARD MANUFACTURER.

E. PROVIDE WATER RESISTANT GYPSUM BOARD UNDER TUB AND SHOWER ENCLOSURE MATERIALS TO A HEIGHT OF 70 INCHES MINIMUM ABOVE DRAIN INLET (CBC 1210.3). MAINTAIN GAP BETWEEN FACTORY EDGE AND ALL TUBS, SHOWER RECEPTORS TO ENSURE FULL SEALANT APPLICATION BY CERAMIC TILE INSTALLER.

F. EXTERIOR USE: EXTERIOR GRADE FIRE RATED, FOR AREAS SUBJECT TO MOISTURE AT FIRE ASSEMBLIES AS DETAILED.

G. METAL CORNER BEAD, CASING AND TRIM - GALVANIZED AND NAILED.
1) L-SHAPED TRIM AT EXPOSED EDGES TYPICAL.
2) BULLNOSE CORNER BEAD AT EXTERNAL CORNERS

H. RESILIENT CHANNELS: PROVIDE AT FIRE/SOUND RATED FLOOR/CEILING ASSEMBLIES AS DETAILED.

I. TAPE AND COMPOUND: AS RECOMMENDED BY GYPSUM BOARD MANUFACTURER FOR USE SPECIFIED.

SECTION 9-C FLOORING:

RESILIENT FLOORING
SCOPE:

A. FURNISH AND INSTALL ALL RESILIENT FLOORING MATERIAL COMPLETE AS SCHEDULED.

A. SUBFLOORS SHALL BE CLEAN, FREE OF DUST AND DRY, LEVEL AND SMOOTH.

B. SURFACES SHALL BE PRIMED AS RECOMMENDED BY THE MANUFACTURER.

C. MATERIALS SHALL BE APPLIED IN ACCORDANCE WITH THE MANUFACTURER'S INSTRUCTIONS.

D. ENSURE ADEQUACY OF FLOOR PLANE PRIOR TO INSTALLATION NOTIFY OWNER OF ANY SUBSTANDARD CONDITION PRIOR TO APPLICATION.

E. VERIFY ACCEPTABILITY OF CONCRETE SURFACES FOR ALKALINITY PRIOR TO INSTALLATION.

MATERIALS:
A. VINYL SHEETING: AS SELECTED BY OWNER.

B. ADHESIVES: AS RECOMMENDED BY THE MANUFACTURER OF THE FLOOR COVERING.

C. PROVIDE POSITIVE SLOPE AT TILE SEATS WITHIN SHOWERS AND AT FLOOR TOWARDS FLOOR DRAIN.

NOTE: CHANGES IN FLOOR MATERIAL SHALL OCCUR AT THE CENTERLINE OF THE DOOR BETWEEN ADJACENT ROOMS, UNLESS INDICATED OTHERWISE ON PLANS.

SECTION 9-D TILE
SCOPE: FURNISH AND INSTALL TILE, GROUT, MASTIC, MORTAR, SEALER ETC. COMPLETE. WORK SHALL BE CLEAN, PLUMB, LEVEL, EXCEPT AT AREAS INTENDED TO DRAIN, TRUE TO LINE WITH CONSISTENT JOINTS.

INSTALLATION:
A. TILE ON FLOOR, SLAB OR WOOD FRAME SHALL BE INSTALLED PER THE CERAMIC TILE INSTITUTE STANDARDS AND TILE COUNCIL OF AMERICA.

B. INSTALL MUD SET TILE AT COUNTERS, TUBS AND SHOWERS PER THE CERAMIC TILE INSTITUTE AND TILE COUNCIL OF AMERICA STANDARDS.

C. PROVIDE WATERPROOF MEMBRANE BENEATH TILE OVER WATER RESISTANT BACKING BOARD AS RECOMMENDED BY MANUFACTURER AND CERAMIC TILE INSTITUTE AND TILE COUNCIL OF AMERICA STANDARDS AT ALL AREAS SUBJECT TO MOISTURE AND WATER "I.E., TUBS/SHOWERS".

MATERIALS:

A. TILE AND GROUT AS SELECTED BY BUILDER.

B. INSTALLATION OF GROUTED TILE FLOORING IS NOT RECOMMENDED OVER WOOD FRAMED FLOOR SYSTEMS.

SECTION 9-E LAMINATE PLASTIC FINISHES

LAMINATE PLASTIC: FORMICA, WILSON ART OR NEVAMAR. 1/16TH INCH GENERAL PURPOSE GRADE 10.

APPLICATION: LAMINATE PLASTIC SHALL BE INSTALLED IN STRICT ACCORDANCE WITH THE MANUFACTURER'S INSTRUCTIONS. SPLASHES SHALL BE FULLY FORMED (U.N.O.). RANGE CUTS AND COUNTERS SHALL BE SELF-EDGED (U.N.O.).

SECTION 9-F COUNTER TOPS:

MATERIALS SHALL BE INDICATED ON INTERIOR ELEVATIONS.
COLORS SHALL BE SELECTED BY COLOR COORDINATOR.

SECTION 9-G PAINTING AND FINISHING

SCOPE: PROVIDE PAINTING WORK AS INDICATED AND SPECIFIED, COMPLETE INCLUDING PREPARATION OF SURFACES OTHER THAN THOSE THAT ARE FACTORY PRIMED.

WORKMANSHIP:

A. EACH COAT SHALL BE UNIFORMLY APPLIED, WELL BRUSHED OUT AND FREE OF BRUSH MARKS, RUNS, SAGS OR SKIPS.

B. PAINT FINISHES SHALL BE CUT SHARPLY TO LINE. PROTECT ADJACENT SURFACES.

C. MIX AND APPLY PAINT AND STAINS IN ACCORDANCE WITH THE MANUFACTURER'S INSTRUCTIONS.

D. HARDWARE SHALL BE MASKED OR REMOVE PRIOR TO PAINTING OR STAINING.

E. SUBCONTRACTOR WILL BE RESPONSIBLE FOR ANY DAMAGE RESULTING FROM OVERSPRAY, AND ALL NECESSARY CLEAN-UP.

F. SEMI-GLOSS PAINT TO BE ROLLER OR BRUSH APPLIED.

PREPARATION OF SURFACES:

A. SURFACES SHALL BE CLEAN AND DRY, AND IN SUITABLE CONDITION FOR FINISH SPECIFIED. REMOVE ALL OIL, GREASE, BOND BREAKING AGENTS, DUST, MILL SCALE AND EFFLORESCENCE.

B. CRACKS, HOLES, AND KNOTS SHALL BE FILLED, SANDED SMOOTH, AND SEALED. WOOD SURFACES, EXCEPT RESAWN WOOD, SHALL BE SANDED PERFECTLY SMOOTH. SANDING DUST SHALL BE COMPLETELY REMOVED.

C. TRIM AND OTHER FINISH WORK SHALL BE PRIMED PRIOR TO INSTALLATION, TO MINIMIZE INCONSISTENT SHRINKAGE.

MATERIALS:

A. SUBMIT LIST OF MATERIALS AND MANUFACTURERS FOR OWNERS AND ARCHITECTS REVIEW.

B. ALL MATERIALS SHALL BE DELIVERED TO THE SITE IN SEALED ORIGINAL MANUFACTURER'S CONTAINERS.

C. STAIN SHALL BE SELECTED BY COLOR CONSULTANT OR BUILDERS SELECTED SUBSTITUTE.

D. PAINT SHALL BE MANUFACTURED BY "DUNN EDWARDS" OR OWNERS SELECTED SUBSTITUTE.

COLORS: TO BE SELECTED BY THE ARCHITECT, COLOR CONSULTANT, OR BUILDERS AGENT.

EXTERIOR PAINTING AND STAINING:

A. EXTERIOR EXPOSED CONCRETE AND MASONRY: TWO COATS MASONRY PAINT.
B. EXTERIOR WOOD, INCLUDING SIDING, GARAGE DOORS, RAILINGS, FASCIA, EXPOSED BEAMS, ALL TRIM, ETC., SHALL RECEIVE A MINIMUM OF ONE COAT OF PRIMER AND ONE TO TWO COATS FINISH, OR , AS SPECIFIED IN CONTRACT.

C. EXPOSED METAL, INCLUDING VENT PIPES, EXHAUST VENTS, HEATING AND AIR CONDITIONING UNITS, GRILLS, ETC. TWO COATS OF PAINT OVER ONE COAT OF PRIMER. COLOR TO MATCH ADJACENT SURFACES.

D. ALL EXPOSED EDGES OF TRIM TO BE SAME COLOR AS FACE.

E. NO THINNING OF MATERIAL SHALL BE ACCEPTABLE.

F. SUBCONTRACTOR SHALL SEAL ALL SIX SIDES OF ALL DOORS.

G. STUCCO ACCENTS PER COLOR SCHEDULE.

H. THE NUMBER OF COATS NOTED ABOVE SHALL BE CONSIDERED MINIMUM. APPLY ADDITIONAL COATS IF REQUIRED TO PROVIDE FULL AND EVEN COVERAGE THROUGHOUT.

I. FULLY SEAL AND PRIME ALL CUT ENDS OF WOOD MEMBERS IN CONTACT WITH OTHER WOOD MEMBERS.

INTERIOR PAINTING AND FINISHING:

A. CEILINGS AND WALLS:

1) KITCHENS, NOOKS, BATHROOMS AND INTERIOR SERVICE ROOMS: ONE COAT SEALER AND ONE COAT SEMI-GLOSS ENAMEL, UNLESS NOTED OTHERWISE.

2) ALL OTHER ROOMS: ONE COAT SEALER AND ONE COAT FLAT PAINT, UNLESS NOTED OTHERWISE.

B. WARDROBES/CLOSETS: FINISH AS SPECIFIED FOR ADJOINING ROOM, EXCEPT SHELVING.

C. DOORS, FRAMES, WOOD BASE, SHELF CLEATS: ONE COAT PRIMER, ONE COAT SEMI-GLOSS ENAMEL.

D. STAINGRADE CABINETS: ONE COAT SANDING SEALER, ONE COAT STAIN, TWO COATS LACQUER.

E. STAINGRADE WOOD HAND RAILINGS, WOOD CAPS ETC.: ONE COAT STANDING SEALER, ONE COAT STAIN, TWO COATS LACQUER.

F. PAINT GRADE CABINETS, RAILINGS, WOOD CAPS ETC.: ONE COAT SEALER AND ONE COAT SEMI-GLOSS ENAMEL.

G. METAL SURFACES: PRIME AND PAINT SAME AS ADJACENT SURFACES.

H. LUMINOUS CEILING RECESSES ARE TO BE PAINTED WITH ONE (1) COAT SEALER AND ONE (1) COAT WHITE ENAMEL HIGH GLOSS.

I. ALL EXPOSED INTERIOR WOOD BEAMS TO BE PAINTED TO MATCH CEILING OR SOLID STAIN PER OWNER.

J. RESAWN AND ROUGHSAWN LUMBER

1) ALL ROUGHSAWN AND RESAWN SURFACES TO RECEIVE STAIN. COLOR AND FINISH TO BE APPROVED BY BY COLOR AND MATERIAL SPECIFICATION

2) DO NOT PRIME UNLESS NOTED ON PLANS.

K. THE NUMBER OF COATS NOTED ABOVE SHALL BE CONSIDERED MINIMUM. APPLY ADDITIONAL COATS IF REQUIRED TO PROVIDE FULL AND EVEN COVERAGE THROUGHOUT.

DIVISION 10: SPECIALTIES

SECTION 10-A GENERAL SPECIALTIES

SCOPE: FURNISH AND INSTALL COMPLETE IN WORKING ORDER THE ITEMS INDICATED ON THE DRAWINGS AND AS SPECIFIED HEREIN. THE GENERAL CONTRACTOR TO VERIFY COMPATIBILITY OF ALL ADJACENT FINISH MATERIALS WITH ALL SELECTED FIXTURES AND APPLIANCES. ALL FIXTURES AND APPLIANCES TO BE CEC CERTIFIED.

BATH & PLUMBING ACCESSORIES:

A. WATER CLOSET: 1.6 GAL. AVE WATER CONSUMPTION. AS SELECTED BY OWNER. (CPC 402.2)

B. LAVATORY: AS SELECTED BY BUILDER / OWNER.

C. TUB/SHOWER COMBINATION: AS SELECTED BY BUILDER/ OWNER. PROVIDE WATER PROOF ENCLOSURE TO A MINIMUM 72" ABOVE THE TUB DRAIN.

D. MASTER BATHTUB: AS SELECTED BY BUILDER/OWNER 42 INCH X 60 INCH

E. SHOWER ENCLOSURE: SIZE AS INDICATED ON DRAWINGS. CERAMIC TILE SHOWER STALL OVER WATERPROOF MEMBRANE WITH FLOOR TO SLOPE TOWARDS FLOOR DRAIN WITH TEMPERED, SHATTERPROOF GLASS ENCLOSURE. CERAMIC TILE WALLS TO HEIGHT INDICATED ON INTERIOR ELEVATIONS, MINIMUM 72 INCH ABOVE DRAIN. (CPC-IAPMO STD 15-4-2003 ITEM 4.6) FRAME AS SELECTED BY OWNER, MINIMUM 72 INCH HIGH ABOVE DRAIN.

F. MEDICINE CABINETS: MIRRORED DOOR, RECESS MOUNTED, TOP AT + 72 INCH.

G. WATER HEATER: AS SELECTED BY T-24, GAS, WITH PRESSURE/ TEMPERATURE RELIEF VALVE PIPED TO EXTERIOR OF BUILDING, WITH INSULATION BLANKET, ON MINIMUM 18 INCH HIGH PLATFORM AT GARAGE, WITH PAN AND DRAIN LINE TO OUTSIDE. FEUL BURNING EQUIPMENT TO OUTSIDE. FUEL BURNING EQUIPMENT LOCATED IN GARAGES AND SUBJECT TO MECHANICAL DAMAGE FROM THE NORMAL VEHICULAR PATH SHALL BE PROTECTED AS INDICATED IN DRAWINGS AND AS REQUIRED BY CMC 508.14. ALL TANK-TYPE WATER HEATERS SHALL BE SEISMICALLY PER CPC CHAPTER 5.

H. SHOWER HEAD: AS SELECTED BY BUILDER/OWNER, INSTALL MIN. 78 INCH ABOVE DRAIN.

KITCHEN FIXTURES AND APPLIANCES:

A. DISHWASHER: AS SELECTED BY BUILDER /OWNER, 24 INCH WIDE - VERIFY.

B. COOKTOP: GAS. AS SELECTED BY OWNER. 30 INCH WIDE WITH 30 INCH WIDE EXHAUST HOOD, 30 INCH ABOVE COOKTOP - VERIFY.

C. OVEN: GAS. AS SELECTED BY BUILDER/OWNER. BUILT-IN DOUBLE OVENS: 30 INCH WIDE X 56 INCH HIGH - VERIFY.

D. MICROWAVE OVEN: AS SELECTED BY OWNER.

E. REFRIGERATOR: PROVIDE 39 INCH WIDE X 72 INCH HIGH SPACE-VERIFY

F. SINK: DOUBLE SINK AS SELECTED BY BUILDER/ OWNER. WITH DISPOSAL: 42 INCH WIDE - VERIFY.

G. GARBAGE DISPOSAL: AS SELECTED BY BUILDER / OWNER.

FINISH HARDWARE: AS SELECTED BY BUILDER/ OWNER.

HOUSE NUMBERS: AS SELECTED BY OWNER. ADDRESS TILES, 4 INCH HIGH LETTERS ON CONTRASTING BACKGROUND. COLOR TO MATCH

MAILBOXES: AS SELECTED BY BUILDER/ OWNER. WILL BE PROVIDED ONLY IF REQUIRED BY LOCAL CODE OR ORDINANCE.

FIREPLACES

FIREPLACES: ELEVATION AND SIZE AS DETAILED BY ARCHITECT, SEE DRAWINGS. PREFABRICATED METAL FIREBOX BY LENNOX, MERIT SERIES, ANSI Z21.50 (OR APPROVED EQUAL) WITH APPROVED SPARK ARRESTER

THE SPARK ARRESTOR SHALL MEET THE FOLLOWING REQUIREMENTS:

1. THE NET FREE AREA OF THE SPARK ARRESTER SHALL NOT BE LESS THAN FOUR TIMES THE NETFREE AREA OF THE OUTLET OF THE CHIMNEY.

2. THE SPARK ARRESTER SCREEN SHALL HAVE HEAT AND CORROSION RESISTANCE EQUIVALENT TO 12 GAGE WIRE, 19 GAGE GALVANIZED WIRE OR 24 GAGE STAINLESS STEEL.

3. OPENINGS SHALL NOT PERMIT THE PASSAGE OF SPHERES HAVING A DIAMETER LARGER THAN 1/2 INCH AND SHALL NOT BLOCK THE PASSAGE OF SPHERES HAVING A DIAMETER OF LESS THAN 3/8 INCH.

4. THE SPARK ARRESTOR SHALL BE ACCESSIBLE FOR CLEANING AND THE SCREEN OR CHIMNEY CAP SHALL BE REMOVABLE TO ALLOW FOR CLEANING OF THE CHIMNEY FLUE. CBC 2802.1

DIVISION 11: EQUIPMENT

SECTION 11A - APPLIANCES AND SPECIAL EQUIPMENT

MEASUREMENTS: VERIFY ALL DIMENSIONS SHOWN ON THE DRAWINGS BY TAKING FIELD MEASUREMENTS; PROPER FIT AND ATTACHMENT OF ALL PARTS IS REQUIRED. NOTIFY ARCHITECT IF ANY DISCREPANCIES APPEAR.

DIVISION 12: FURNISHINGS

NOT INCLUDED IN THESE SPECIFICATIONS.

DIVISION 13: SPECIAL CONSTRUCTION

NOT INCLUDED IN THESE SPECIFICATIONS.

DIVISION 14: CONVEYING EQUIPMENT

NOT INCLUDED IN THESE SPECIFICATIONS.

DIVISION 15: MECHANICAL

SECTION 15-A HEATING

SCOPE: SUPPLY ALL LABOR, TRANSPORTATION, MATERIALS, ETC., FOR INSTALLATION OF A COMPLETE HEATING AND AIR CONDITIONING SYSTEM TO OPERATE ACCORDING TO THE BEST PRACTICES OF THE TRADE INCLUDING, BUT NOT LIMITED TO: MECHANICAL UNITS, DUCTS, REGISTERS, CATWALKS, GRILLES, BOOTS, VENT PIPES, DAMPERS, COMBUSTION AIR, FANS, VENTILATORS, REFRIGERANT LINES, REFRIGERANT, ETC. ALL MATERIALS, WORK, ETC., TO COMPLY WITH ALL REQUIREMENTS OF ALL LEGALLY CONSTITUTED PUBLIC AUTHORITIES HAVING JURISDICTION INCLUDING ALL COUNTY AND STATE ORDINANCES. FURNISH AND INSTALL ALL EQUIPMENT COMPLETE AND OPERABLE. VERIFY ALL MATERIAL AND INSTALLATION REQUIREMENTS AND LIMITATIONS AT FIRE AND SOUND ASSEMBLIES.
* ALL DUCTS SHALL BE SEALED WITH APPROVED MASTICS, TAPES, TO PROVIDE A SUBSTANTIALLY AIRTIGHT SYSTEM.
MAXIMUM DUCT LEAKAGE , BOTH SUPPLY AND RETURN , SHALL NOT EXCEED 6 PERCENT OF THE RATED CFM VOLUME PER CEC SEC. 144(K).

INSTALLATION:

A. FURNACE TO BE INSTALLED IN ATTIC AS REQUIRED BY THE CMC SEC. 931.0

B. AN ATTIC FURNACE SHALL COMPLY WITH SECTION 904.11 OF THE CMC AND THE FOLLOWING:

1) PROVIDE REQUIRED CLEARANCES FOR DUCT WORK AND TO COMBUSTIBLES.

2) PROVIDE MINIMUM 22 INCH X 30 INCH ATTIC ACCESS (BIG ENOUGH FOR LARGEST PIECE OF EQUIPMENT) OPENING AND PASSAGEWAY CONTINUOUS TO THE FURNACE AND ITS CONTROLS. (CMC 904.11.1) A 20 INCH X 30 INCH ACCESS OPENING MAY BE USED IF NO EQUIPMENT IS PROVIDED IN THE ATTIC SPACE (CBC 1204.2)

3) PROVIDE AN UNOBSTRUCTED CONTINUOUS SOLID FLOOR PASSAGEWAY NOT LESS THAN 24 INCH WIDE NOT TO EXCEED 20' FROM THE ATTIC ACCESS OPENING TO THE FURNACE. (CMC 904.11.2 & 904.11.3)

4) PROVIDE A LEVEL WORKING PLATFORM 30 INCH DEEP (x MIN. 30 INCH WIDE) IN FRONT OF THE ENTIRE FIREBOX SIDE OF THE FURNACE AND TO ALL SERVICEABLE CONTROLS, FILTERS ETC. (CMC 904.11.4)

5) PROVIDE A PERMANENT ELECTRIC OUTLET AND SWITCHED LIGHT FIXTURE AT THE ENTRANCE TO THE PASSAGEWAY. (CMC 904.11.5)

A. NO ALTERATIONS TO THE STRUCTURAL FRAME, DIAPHRAGMS, CONNECTIONS OR SHEAR PANELS SHALL BE MADE WHICH WOULD COMPRISE THE DESIGNED STRUCTURAL INTEGRITY OF SUCH ELEMENTS WITHOUT PRIOR WRITTEN APPROVAL FORM THE STRUCTURAL ENGINEER.

B. FUEL BURNING EQUIPMENT LOCATED IN GARAGES AND SUBJECT TO MECHANICAL DAMAGE FROM THE NORMAL VEHICULAR PATH SHALL BE PROTECTED AS INDICATED IN DRAWINGS AND AS REQUIRED BY CMC 308.1, CPC 508.14 AND NFPA 54:9.11.10.2)

C. PROVIDE HIGH AND LOW COMBUSTION AIR IN ACCORDANCE WITH MANUFACTURER'S REQUIREMENTS AND CMC CHAPTER 7

D. DUCTS PENETRATING WALLS OR CEILINGS SEPARATING THE DWELLING UNIT FROM THE GARAGE SHALL BE CONSTRUCTED OF A MINIMUM 0.019 INCH SHEET STEEL AND SHALL HAVE NO OPENINGS INTO THE GARAGE PER CBC SECTION 406.1.4.

MATERIALS:
A. DUCTS: CONSTRUCTED, INSTALLED AND INSULATED PER CHAPTER 6, CMC

B. DAMPERS: PROVIDE APPROVED AUTOMATIC FIRE DAMPERS OR MINIMUM 26 GAUGE CORROSION RESISTANT METAL MATERIAL WITH SEALED EDGES AT ALL DUCTWORK PENETRATING FIRE RATED WALLS, FLOORS OR CEILINGS AS REQUIRED AND ALLOWED BY THE CBC SECTION 716.5. ALL FAN SYSTEMS EXHAUSTING AIR FROM THE BUILDING ENVELOPE TO THE OUTSIDE SHALL BE PROVIDED WITH BACKDRAFT DAMPERS. FIRE DAMPERS SHALL BE INSTALLED IN ACCORDANCE W/ THEIR LISTING.

CALCULATIONS AND DRAWINGS: CONTRACTOR TO SUPPLY AND SUBMIT TO THE BUILDING DEPARTMENT, CALCULATIONS AND DRAWINGS FOR APPROVAL. SUBMIT ONE (1) SET TO THE ARCHITECT FOR REVIEW FOR CONFORMANCE WITH THE VISUAL DESIGN CONCEPT PRIOR TO COMMENCING WORK. EQUIPMENT SHALL COMPLY WITH STATE ENERGY REQUIREMENTS FOR EFFICIENCY. DUCT WORK "R" VALUE SHALL ALSO COMPLY WITH STATE ENERGY REQUIREMENTS.

SECTION 15-B PLUMBING

SCOPE: SUPPLY ALL LABOR, TRANSPORTATION, MATERIALS, ETC., FOR INSTALLATION OF COMPLETE PLUMBING SYSTEM TO OPERATE ACCORDING TO THE BEST PRACTICES OF THE TRADE AND INCLUDING, BUT NOT LIMITED TO FIXTURES, HOT AND COLD WATER PIPING, EXHAUST FLUES, COMBUSTION AIR, GAS PIPING, LOG LIGHTERS, DRAINS, SOIL AND VENT PIPING, HOT WATER HEATERS, PIPE INSULATION, METERS, VALVES, VAULTS, ETC. ALL MATERIALS, WORK, ETC., TO COMPLY WITH ALL REQUIREMENTS OF ALL LEGALLY CONSTITUTED PUBLIC AUTHORITIES HAVING JURISDICTION INCLUDING ALL COUNTY AND STATE ORDINANCES. FURNISH AND INSTALL PLUMBING WORK COMPLETE AND OPERABLE, INCLUDING TRENCHING AND BACKFILLING. VERIFY ALL MATERIAL AND INSTALLATION REQUIREMENTS AND LIMITATIONS AT FIRE AND SOUND ASSEMBLIES.

INSTALLATION:

A. ROUGHING-IN SHALL BE COMPLETED, TESTED AND INSPECTED AS REQUIRED BY CODE BEFORE CLOSING-IN WITH OTHER WORK.

B. OPENINGS IN PIPES, DRAINS, AND FITTINGS SHALL BE KEPT COVERED DURING CONSTRUCTION.

C. PROVIDE SOLID BACKING FOR SECURING FIXTURES. ALL FIXTURES TO BE SET LEVEL.

D. PROVIDE CLEANOUTS AT ENDS OF ALL LINES AND WHERE REQUIRED BY CODES.

E. COPPER TUBING SHALL BE FULLY SWEATED TO FITTINGS. ALL COPPER PIPE CONNECTIONS TO FERROUS PIPING SHALL BE MADE WITH DIELECTRIC COUPLING OR ISOLATION FLANGES.

F. BLACK IRON AND GALVANIZED STEEL PIPE JOINTS SHALL BE MADE WITH APPROVED PIPE THREAD COMPOUND.

G. PROVIDE SHUT-OFF VALVES AT EACH FIXTURE.

H. PROVIDE CONDENSATE LINE AT EACH F.A.U. LOCATION. PROVIDE PRIMARY & SECONDARY CONDENSATE LINE TO AN APPROVED DRAINAGE RECEPTACLE AT ATTIC F.A.U. LOCATIONS.

I. PROVIDE GOLD WATER LINE TO REFRIGERATOR SPACE IN RECESSED BOX OR IN CABINET IMMEDIATELY ADJACENT TO REFRIGERATOR SPACE.

J. ALL VENTS TO LEAD TO OUTSIDE AIR, WHERE POSSIBLE, LOCATE ALL ROOF VENTS TO REAR SIDE OR RIDGES.

K. ALL HORIZONTAL A.B.S. PIPING SHALL BE HUNG WITH APPROVED HANGERS AT 4' 0" ON CENTER MAXIMUM AND SPACED TO PERMIT EXPANSION AND CONTRACTION WITHOUT HITTING ADJOINING PIPE. VERTICAL PIPING SHALL BE SUPPORTED AT 8' 0 INCH ON CENTER WITH WROUGHT STEEL "U" STRAPS SECURELY FASTENED TO BUILDING FRAME. ALTERNATE METHODS MUST BE BE DESCRIBED BY CODE AND APPROVED BY BUILDER / ARCHITECT.

L. PROVIDE AIR CHAMBERS AT LAVATORY, DISHWASHER AND CLOTHES WASHER WATER CONNECTIONS. SET VERTICALLY AS CLOSE TO THE FIXTURE AS FEASIBLE.

M. PROVIDE 3/4 INCH TEE FOR IRRIGATION AT MAIN SHUT-OFF.

N. PROVIDE WATER HEATER SEISMIC RESTRAINTS AS REQUIRED BY LOCAL CODE.

O. NO ALTERATIONS TO THE STRUCTURAL FRAME, DIAPHRAGMS, CONNECTIONS OR SHEAR PANELS SHALL BE MADE WHICH WOULD COMPROMISE THE DESIGNED STRUCTURAL INTEGRITY OF SUCH ELEMENTS WITHOUT PRIOR WRITTEN APPROVAL FROM THE STRUCTURAL ENGINEER.

MATERIALS:

A. CORROSIVE PROPERTIES OF SOIL: FOLLOW ALL RECOMMENDATIONS IN THE FINAL SOILS REPORT FOR ALL MATERIALS PLACED WITHIN OR IN PROXIMITY OF SOIL AS NECESSARY.

B. CLEANOUTS: OWNER SELECTED SUBSTITUTE.

C. DOMESTIC WATER PIPING: TYPE "L" OR "K" COPPER TUBING BELOW GRADE AND SLAB - VERIFY WITH SOIL COMPATIBILITY; ALL OTHER COPPER TUBING SHALL BE TYPE "M". FITTINGS - WROUGHT COPPER OR CAST BRONZE. USE NO-LEAD SOLDER.

D. DIELECTRIC INSULATORS: EPCA TYPE "FX", "FB" OR "GX" DIELECTRIC UNIONS.

E. VENT PIPING: ABS D2661-68.

F. VALVES, STOPS, CLOCKS: OWNER SELECTED SUBSTITUTE.

G. ROOF FLASHINGS: SEE SECTION 7B.

H. FIXTURES AND FITTINGS: SEE SECTION 10.

I. PROVIDE RECESSED FAUCET BOX AT WASHER.

J. DRAINS: SIZED AS REQUIRED. PROVIDE OVERFLOWS AS INDICATED ON DRAWINGS AND AS NECESSARY.

K. AIR CHAMBERS AT EACH END OF HEADERS, SHALL BE 36 INCH LONG, ONE PIPE SIZE LARGER THAN HEADER. INDIVIDUAL CHAMBERS SHALL BE 18 INCH LONG, ONE PIPE SIZE LARGER THAN BRANCH TO FIXTURE. ALTERNATE METHODS MUST BE DESCRIBED BY CODE AND APPROVED BY THE ARCHITECT / BUILDER.

L. WATER HEATERS SHALL CONFORM TO STATE ENERGY REGULATIONS AND SHALL BE CEC LISTED.

M. WATER HEATERS OVER 4' FEET HIGH WITH NON-RIGID WATER CONNECTIONS SHALL BE SECURED TO RESIST EARTHQUAKES, PER CMC REQUIREMENTS.

DIVISION 16: ELECTRICAL

CALCULATIONS AND DRAWINGS: CONTRACTOR TO SUPPLY AND SUBMIT TO THE BUILDING DEPARTMENT LOAD CALCULATIONS AND DRAWINGS FOR APPROVAL PRIOR TO COMMENCING WORK. SUBMIT ONE (1) SET TO THE ARCHITECT FOR REVIEW FOR CONFORMANCE WITH THE VISUAL DESIGN CONCEPT PRIOR TO COMMENCING WORK.

METERS: VERIFY ALL REQUIREMENTS WITH GOVERNING UTILITY COMPANY.

SECTION 16-A ELECTRICAL

ARCHITECTS ELECTRICAL SYSTEM LAYOUTS ARE GENERALLY A DIAGRAMMATIC LOCATION OF OUTLETS AND EQUIPMENT IS APPROXIMATE. ACTUAL ROUTING OF WIRING, LOCATIONS OF OUTLET TO BE GOVERNED BY STRUCTURAL CONDITIONS AND CONSTRUCTIONS. WIRING FOR EQUIPMENT REQUIRING MAINTENANCE AND INSPECTION TO BE READILY ACCESSIBLE.

SCOPE: SUPPLY ALL LABOR, TRANSPORTATION, MATERIALS, ETC., FOR INSTALLATION OF COMPLETE ELECTRICAL SYSTEM TO OPERATE ACCORDING TO THE BEST PRACTICES OF THE TRADE AND INCLUDING, BUT NOT LIMITED TO FIXTURES, APPLIANCES, WIRING, SWITCHES, OUTLETS, TELEVISION JACKS, SERVICES, GROUNDS, TEMPORARY POWER, JUNCTION BOXES, CONDUIT, SUBPANELS, ETC. ALL WORK, MATERIALS, ETC. TO COMPLY WITH ALL REQUIREMENTS OF ALL LEGALLY CONSTITUTED AUTHORITIES HAVING JURISDICTION INCLUDING ALL COUNTY AND STATE ORDINANCES. FURNISH AND INSTALL ELECTRICAL WORK COMPLETE AND OPERABLE. VERIFY ALL MATERIAL AND INSTALLATION REQUIREMENTS AND LIMITATIONS AT FIRE AND SOUND ASSEMBLIES.

STANDARDS:

ELECTRICAL SERVICES: UNDERGROUND, THE SERVING UTILITY WILL PROVIDE AND INSTALL ALL PRIMARY AND SECONDARY SERVICE RACEWAYS AND CONDUCTORS INCLUDING TRANSFORMER PADS AND CONNECTIONS TO THE LINE SIDE OF ALL BUILDING MAIN DISCONNECTS. RACEWAYS, SIZED AS DESIGNATED BY THE SERVICE UTILITY, SHALL BE PROVIDED BY THE ELECTRICAL CONTRACTOR FROM EACH BUILDING MAIN DISCONNECT TO THE EXTERIOR BUILDING LINE FOR CONTINUATION BY THE SERVICING UTILITY.

WORK AND EQUIPMENT SHALL BE IN ACCORDANCE WITH THE BEST PRACTICES OF THE TRADE AND CONFORM TO ALL LOCAL GOVERNING AGENCIES.

MATERIALS AND EQUIPMENT SHALL BE U.L. APPROVED.

CORROSIVE PROPERTIES OF SOIL: FOLLOW ALL RECOMMENDATIONS IN THE FINAL SOILS REPORT FOR ALL MATERIALS PLACED WITHIN OR IN PROXIMITY OF SOIL AS NECESSARY.

SHOULD A CONFLICT ARISE BETWEEN THIS SPECIFICATION, THE DRAWINGS OR ANOTHER ELECTRICAL SPECIFICATION ISSUED AS A PART OF THESE DOCUMENTS, THE MORE STRINGENT SHALL PREVAIL.

INSTALLATION:

A. PROVIDE SEPARATE CIRCUITS EACH FOR DISHWASHER, GARBAGE DISPOSAL, REFRIGERATOR, WASHER, DRYER, F.A.U. AND MICROWAVE OVEN.

B. SWITCHED OUTLETS SHALL BE 1/2 HOT.

C. BATHROOM FANS: WHERE PERMITTED BY CODE, SWITCH FANS SEPARATELY FROM LIGHT. PROVIDE EXHAUST FANS AT TOILET ROOMS AND/OR AREAS WITH TUBS, SHOWERS OR OR SPAS WITH A MIN 50 CFM FAN. (CMC TABLE 4-4). ALL EXHAUST VENTS TO LEAD TO OUTSIDE AIR AND BE 3'-0" MIN. FROM ANY OPENINGS OR PROPERTY LINES. (CMC 504.5)

D. ALL EQUIPMENT INSTALLED OUTDOORS AND EXPOSED TO WEATHER SHALL BE WEATHERPROOF.

E. PROVIDE GROUND FAULT CIRCUIT INTERRUPTERS, G.F.I., PROTECTION FOR PERSONNEL IN BATHROOMS, GARAGES, OUTDOORS, IN KITCHENS WHERE RECEPTACLES ARE INSTALLED TO SERVE COUNTERTOP SURFACES, AND WITHIN 6 FT. OF OUTSIDE EDGE OF A WET BAR SINK WHERE RECEPTACLES ARE INSTALLED TO SERVE COUNTERTOP SURFACES. (ART. 210.8 (A).

F. PROVIDE LOW VOLTAGE STUB OUT FOR HOUSE NUMBERS IF LOCAL CODE REQUIRES ILLUMINATION.

G. KITCHEN AND BATHROOM LIGHTING SHALL BE IN ACC

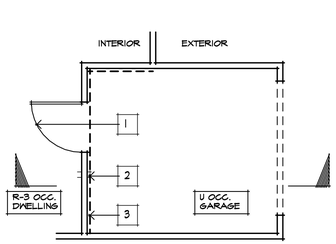

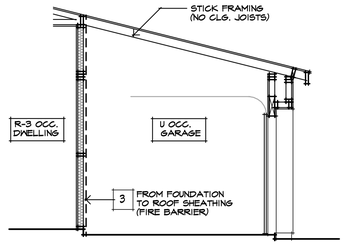

1 STORY **PLAN VIEW** **SECTION VIEW** MIKE - SEE ABOVE

FULL WALL PROTECTION

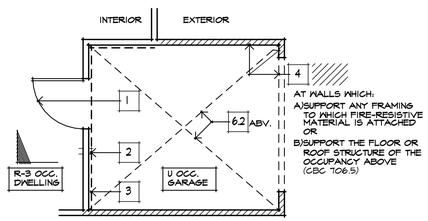

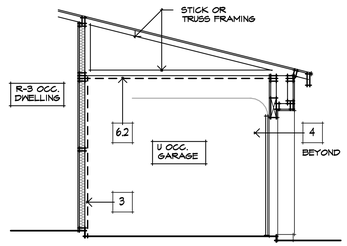

1 STORY **PLAN VIEW** **SECTION VIEW** MIKE - SEE ABOVE

PARTIAL WALL / FULL CEILING PROTECTION

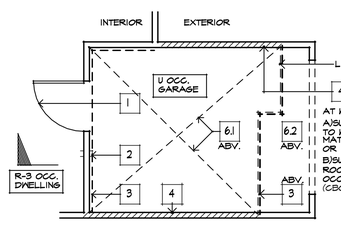

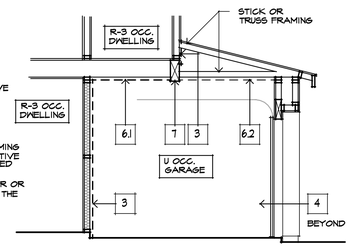

2 STORY **PLAN VIEW** **SECTION VIEW**

FULL WALL AND PARTIAL CEILING PROTECTION

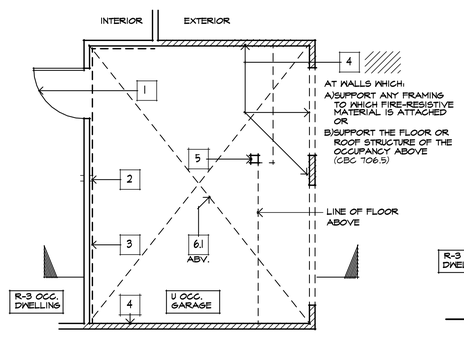

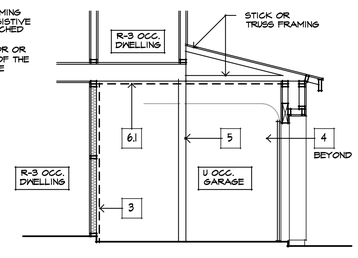

2 STORY **PLAN VIEW** **SECTION VIEW**

PARTIAL WALL AND FULL CEILING PROTECTION

SELF-CLOSING, SELF LATCHING, SOLID WOOD OR METAL HONEYCOMB, 1 3/8 INCHES IN THICKNESS (OR SELF-CLOSING SELF LATCHING DOOR HAVING A FIRE PROTECTION RATING OF NOT LESS THAN 20 MINUTES) PER CBC 715.4.3.

1 DOOR HOUSE TO GARAGE DOOR

CBC SEC. 406.1.4(1)

DUCTS IN A PRIVATE GARAGE AND DUCTS PENETRATING THE WALLS OR CEILINGS SEPARATING THE DWELLING UNIT FROM THE GARAGE SHALL BE CONSTRUCTED OF A MINIMUM 0.019-INCH (0.48 MM) SHEET STEEL AND SHALL HAVE NO OPENINGS INTO THE GARAGE.

2 MECHANICAL PENETRATION

CBC SEC. 406.1.4(2)

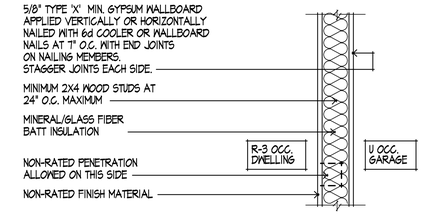

3 WALL BETWEEN GARAGE AND DWELLING

INTERIOR WALL

CBC SEC. 406.1.4(1)

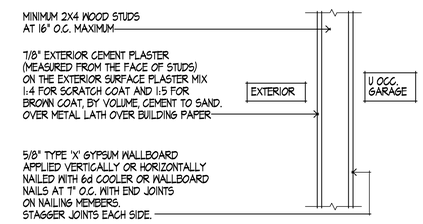

4.1 EXTERIOR WALL

1 HR FIRE-RESISTIVE CONSTRUCTION
CBC TABLE 720.1(2) ITEM 15-1.15

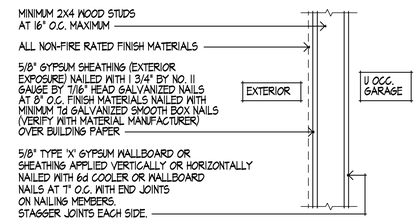

4.2 EXTERIOR WALL AT SIDING

1 HR FIRE-RESISTIVE CONSTRUCTION
CBC TABLE 720.1(2) ITEM 15-1.15

4 WALLS THAT SUPPORT OCCUPANCY SEPARATION

WALLS THAT SUPPORT THE STRUCTURE OF OCCUPANCY ABOVE

CBC SEC. 706.5

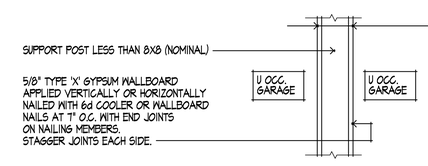

5.1 ISOLATED POST — 1 HR FIRE-RESISTIVE CONSTRUCTION

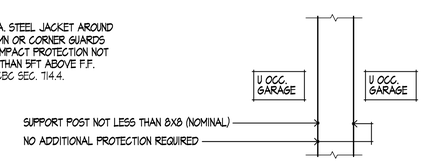

5.2 ISOLATED POST — HEAVY TIMBER, 1 HR FIRE-RESISTIVE CONSTRUCTION

5 ISOLATED POST THAT SUPPORTS OCCUPANCY SEPARATION

ISOLATED POST THAT SUPPORTS THE STRUCTURE OF OCCUPANCY ABOVE

CBC SEC. 602.4.1 (COLUMNS) AND 706.5 (SUPPORTING STRUCTURE)

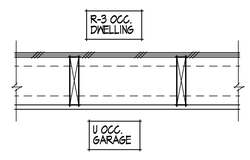

WOOD JOIST, GYPSUM WALLBOARD

ONE LAYER OF 5/8" TYPE X GYPSUM WALLBOARD OR GYPSUM VENEER BASE APPLIED AT RIGHT ANGLES TO JOISTS WITH 1 7/8" TYPE S DRYWALL SCREWS 12" O.C. AT JOINTS AND INTERMEDIATE JOISTS AND 1 1/2" TYPE G DRYWALL SCREWS 12" O.C. PLACED 2" BACK ON EITHER SIDE OF END JOINTS. WOOD JOISTS SUPPORTING 1/2" PLYWOOD WITH EXT. GLUE APPLIED AT RIGHT ANGLES TO JOISTS WITH 8d NAILS.

6.1 FLOOR/CEILING — REQ'D FIRE BARRIER CBC 406.1.4(1)

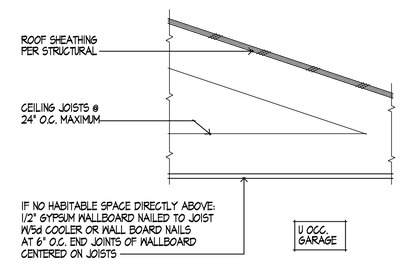

6.2 ROOF/CEILING — NON-RATED

6 FLOOR/CEILING AT OCCUPANCY SEPARATION

FIRE PROTECTION :
R-3 OCCUPANCY (DWELLING) TO U OCCUPANCY (PRIVATE GARAGE) OCCUPANCY SEPARATION

NOTES:

OCCUPANCY SEPARATIONS SHALL BE VERTICAL OR HORIZONTAL OR BOTH OR, WHEN NECESSARY, OF SUCH OTHER FORM AS MAY BE REQUIRED TO AFFORD A COMPLETE SEPARATION BETWEEN THE VARIOUS OCCUPANCY DIVISIONS IN THE BUILDING. WHERE THE OCCUPANCY SEPARATION IS HORIZONTAL, STRUCTURAL MEMBERS SUPPORTING THE SEPARATION SHALL BE PROTECTED BY EQUIVALENT FIRE RESISTIVE CONSTRUCTION. (CBC 706.5)

THE INFORMATION SHOWN HERE IS INTENDED TO ILLUSTRATE THE "GENERAL" FIRE PROTECTION REQUIREMENTS FOR R-3 OCC. TO U OCC. OCCUPANCY SEPARATION AND THE MINIMUM APPLIGABLE CBC REQUIREMENTS . REFER TO CBC FOR DETAILED REQUIREMENTS.

ALL FIELD CONDITIONS WHIGH MAY POSSIBLY BE ENCOUNTERED ARE NOT NECESSARILY DESCRIBED. FIELD CONDITIONS ENCOUNTERED WHICH REQUIRE CLARIFICATION SHALL BE BROUGHT TO THE ATTENTION OF THE ARCHITECT IN A TIMELY MANNER.

THE ARCHITECT RECOMMENDS THAT ALL TRADES PERFORMING WORK AT FIRE PROTECTION AREAS BE FULLY KNOWLEDGEABLE OF THE CODE REQUIREMENTS FOR THE MATERIALS AND INSTALLATION. FURTHER, IT IS RECOMMENDED THAT THE GENERAL CONTRACTOR FIELD WALK THE ENTIRE LENGTH AND EXTENT OF THE FIRE PROTECTED AREAS WITH THE BUILDING OFFICIAL DURING THE MODEL UNIT CONSTRUCTION TO INSURE THAT ALL MATERIALS, INSTALLATION, PENETRATIONS, CONNECTIONS, ECT. ARE COMPLETE AND IN ACCORDANCE WITH ALL CODE REQUIREMENTS. ALL 'GENERAL' REQUIREMENTS SHOWN SHALL BE VERIFIED WITH LOCAL ORDINANCES AND REQUIREMENTS, THE MORE STRINGENT SHALL PREVAIL.

DWELLING UNIT AND ITS ATTIC AREA BY MEANS OF A MINIMUM 1/2 INCH GYPSUM BOARD APPLIED TO THE GARAGE SIDE. GARAGES BENEATH HABITABLE ROOMS SHALL BE SEPARATED FROM ALL HABITABLE ROOMS ABOVE BY NOT LESS THAN A 5/8 INCH TYPE X GYPSUM BOARD OR EQUIVALENT. DOOR OPENINGS BETWEEN A PRIVATE GARAGE AND THE DWELLING UNIT SHALL BE EQUIPPED WITH EITHER SOLID WOOD DOORS OR SOLID OR HONEYCOMB CORE STEEL DOORS NOT LESS THAN 1 3/8 INCHES THICK, OR DOORS IN COMPLIANCE WITH SECTION 715.4.3. OPENINGS FROM A PRIVATE GARAGE DIRECTLY INTO A ROOM USED FOR SLEEPING PURPOSES SHALL NOT BE PERMITTED. DOORS SHALL BE SELF-CLOSING AND SELF-LATCHING (CBC 406.1.4)

APPLICABLE NOTES TO DETAILS

A) REFER TO SPECIFIC FIRE ASSEMBLIES FROM CBC FOR ALL ADDITIONAL FOOTNOTES, SPECIAL REQUIREMENTS AND PROPRIETARY MATERIALS.

B) STRUCTURAL DRAWINGS SHALL BE REFERENCED TO STRUCTURALLY REQUIRED SHEATHING THICKNESSES, MEMBER SIZING AND SPACING BEYOND THE FIRE PROTECTION MINIMUMS NOTED HERE. CONFLICTING INFORMATION SHALL BE BROUGHT TO THE ATTENTION OF THE ARCHITECT IN A TIMELY MANNER.

BEAMS AND GIRDERS MAY BE OF SAWN TIMBER OR STRUCTURAL GLUED-LAMINATED TIMBER AND SHALL NOT BE LESS THAN 6 INCHES IN WIDTH AND NOT LESS THAN 10 INCHES IN DEPTH. (NOMINAL)

7 UNPROTECTED BEAM HEAVY TIMBER

CBC SEC. 602.4.2

KPI Inc.
KNITTER PARTNERS INTERNATIONAL, INC.
architecture & planning
1401 DOVE ST. SUITE 240
NEWPORT BEACH, CA 92660
PHONE: (949) 752-1177
FAX: (949) 752-0151
WWW.KNITTER.COM

©KNITTER PARTNERS INTERNATIONAL ALL RIGHTS RESERVED 2013

THIS DOCUMENT IS THE PROPERTY AND COPYRIGHT OF KNITTER PARTNERS INTERNATIONAL, INC. AND SHALL NOT BE USE ON ANY OTHER WORK, BE REPRODUCED OR DISCLOSED TO OTHERS EXCEPT BY WRITTEN AUTHORIZATION FROM KNITTER PARTNERS INTERNATIONAL, INC.

NO.	DATE	REVISION
△		
△		
△		
△		
△		

IMAGINE DEVELOPMENT L.L.C.

THE COLONY 65
LANCASTER, CALIFORNIA

LICENSED ARCHITECT MICHAEL J. KNITTER C10524 REN. 4-30-15 STATE OF CALIFORNIA

PROJECT INFO

GENERAL

JOB NUMBER **3036**
PROJECT MGR. RC
DRAWN BY
ISSUE DATE: 10-24-14

SHEET TITLE

FIRE SEPARATION COMPLIANCE

SHEET NUMBER

GN3

PLOT TIME: 11:02 AM PATH\NAME: G:\0_KPI\2013\3036 COLONY 65 PLANS\NONPLAN\3036 00 GEN NOTES.DCS

2013 California Green Building Standards Code

CHAPTER 3
GREEN BUILDING

SECTION 301 GENERAL

301.1 Scope. Buildings shall be designed to include the green building measures specified as mandatory in the application checklists contained in this code.

301.1.1 Additions and alterations. [HCD] The mandatory provisions of Chapter 4 shall be applied to additions or alterations of existing residential buildings where the addition or alteration increases the building's conditioned area, volume, or size. The requirements shall apply only to and/or within the specific area of the addition or alteration.

Note: On and after January 1, 2014, residential buildings undergoing permitted alterations, additions or improvements shall replace noncompliant plumbing fixtures with water-conserving plumbing fixtures. Plumbing fixtures replacement is required prior to issuance of a certificate of final completion, certificate of occupancy or final permit approval by the local building department. See Civil Code Section 1101.1, et seq., for the definition of a noncompliant plumbing fixture, types of residential buildings affected and other important enactment dates.

"Noncompliant plumbing fixtures" means any of the following:

1. Any toilet manufactured to use more that 1.6 gallons of water per flush.
2. Any urinal manufactured to use more than one gallon of water per flush.
3. Any showerhead manufactured to have a flow capacity of more than 2.5 gallons of water per minute.
4. Any interior faucet that emits more than 2.2 gallons of water per minute.

301.2 Low-rise and high-rise residential buildings. [HCD] The provisions of individual sections of Calgreen may apply to either low-rise residential buildings, high-rise residential buildings, or both.

CHAPTER 7
INSTALLER AND SPECIAL INSPECTOR QUALIFICATIONS

SECTION 702 QUALIFICATIONS

702.1 Installer training. HVAC system installers shall be trained and certified in the proper installation of HVAC systems including ducts and equipment by a nationally or regionally recognized training or certification program. Uncertified persons may perform HVAC installations when under the direct supervision and responsibility of a person trained and certified to install HVAC systems or contractor licensed to install HVAC systems. Examples of acceptable HVAC training and certification programs include but are not limited to the following:

1. State certified apprenticeship programs
2. Public utility training programs
3. Training programs sponsored by trade, labor or statewide energy consulting or verification organizations
4. Programs sponsored by manufacturing organizations
5. Other programs acceptable to the enforcing agency

702.2 Special inspection. [HCD] When required by the enforcing agency, the owner or the responsible entity acting as the owner's agent shall employ one or more special inspectors to provide inspection or other duties necessary to substantiate compliance with this code. Special inspectors shall demonstrate competence to the satisfaction of the enforcing agency for the particular type of inspection or task to be performed. In addition to other certifications or qualifications acceptable to the enforcing agency, the following certifications or education may be considered by the enforcing agency when evaluating the qualifications of a special inspector:

1. Certification by a national or regional green building program or standard publisher
2. Certification by a statewide energy consulting or verification organization, such as HERS raters, building performance contractors, and home energy auditors
3. Successful completion of a third party apprentice training program in the appropriate trade
4. Other programs acceptable to the enforcing agency

Notes:

1. Special inspectors shall be independent entities with no financial interest in the materials or the project they are inspecting for compliance with this code.
2. HERS raters are special inspectors certified by the California Energy Commission (CEC) to rate homes in California according to the Home Energy Rating System (HERS).

SECTION 703 VERIFICATIONS

703.1 Documentation. Documentation used to show compliance with this code shall include but is not limited to, construction documents, plans, specifications, builder or installer certification, inspection reports, or other methods acceptable to the enforcing agency which demonstrate substantial conformance. When specific documentation or special inspection is necessary to verify compliance, that method of compliance will be specified in the appropriate section or identified in the application checklist.

CHAPTER 4
RESIDENTIAL MANDATORY MEASURES

Division 4.1 – PLANNING AND DESIGN

SECTION 4.101 GENERAL

4.101.1 Scope. The provisions of this division outline planning, design and development methods that include environmentally responsible site selection, building design, building siting and development to protect, restore and enhance the environmental quality of the site and respect the integrity of adjacent properties.

SECTION 4.106 SITE DEVELOPMENT

4.106.1 General. Preservation and use of available natural resources shall be accomplished through evaluation and careful planning to minimize negative effects on the site and adjacent areas. Preservation of slopes, management of storm water drainage and erosion controls shall comply with this section.

4.106.2 Storm water drainage and retention during construction. Projects which disturb less than one acre of soil and are not part of a larger common plan of development which in total disturbs one acre or more, shall manage storm water drainage during construction. In order to manage storm water drainage during construction, one or more of the following measures shall be implemented to prevent flooding of adjacent property, prevent erosion and retain soil runoff on the site.

1. Retention basins of sufficient size shall be utilized to retain storm water on the site.
2. Where storm water is conveyed to a public drainage system, collection point, gutter or similar disposal method, water shall be filtered by use of a barrier system, wattle or other method approved by the enforcing agency.
3. Compliance with a lawfully enacted storm water management ordinance.

4.106.3 Grading and Paving. Construction plans shall indicate how the site grading or drainage system will manage all surface water flows to keep water from entering buildings. Examples of methods to manage surface water include, but are not limited to, the following:

1. Swales
2. Water collection and disposal systems
3. French drains
4. Water retention gardens
5. Other water measures which keep surface water away from buildings and aid in groundwater recharge

Exception: Additions and alterations not altering the drainage path.

Division 4.2 – ENERGY EFFICIENCY

SECTION 4.201 GENERAL

4.201.1 Scope. For the purposes of mandatory energy efficiency standards in this code, the California Energy Commission will continue to adopt mandatory standards.

Division 4.3 – WATER EFFICIENCY AND CONSERVATION

SECTION 4.301 GENERAL

4.301.1 Scope. The provisions of this chapter shall establish the means of conserving water used indoors, outdoors and in wastewater conveyance.

SECTION 4.303 INDOOR WATER USE

4.303.1 Water conserving plumbing fixtures and fittings. Plumbing fixtures (water closets and urinals) and fittings (faucets and showerheads) shall comply with the following:

4.303.1.1 Water closets. The effective flush volume of all water closets shall not exceed 1.28 gallons per flush. Tank-type water closets shall be certified to the performance criteria of the U.S. EPA WaterSense specification for Tank-type Toilets.

Note: The effective flush volume of dual flush toilets is defined as the composite, average flush volume of two reduced flushes and one full flush.

4.303.1.2 Urinals. The effective flush volume of urinals shall not exceed 0.5 gallons per flush.

4.303.1.3 Showerheads.

4.303.1.3.1 Single showerhead. Showerheads shall have a maximum flow rate of not more than 2.0 gallons per minute at 80 psi. Showerheads shall be certified to the performance criteria of the U.S. EPA WaterSense Specification for Showerheads.

4.303.1.3.2 Multiple showerheads serving one shower. When a shower is served by more than one showerhead, the combined flow rate of all showerheads and/or other shower outlets controlled by a single valve shall not exceed 2.0 gallons per minute at 80 psi, or the shower shall be designed to allow only one shower outlet to be in operation at a time.

Note: A hand-held shower shall be considered a showerhead

4.303.1.4 Faucets.

4.303.1.4.1 Residential lavatory faucets. The maximum flow rate of residential lavatory faucets shall not exceed 1.5 gallons per minute at 60 psi. The minimum flow rate of residential lavatory faucets shall not be less than 0.8 gallons per minute at 20 psi.

4.303.1.4.2 Lavatory faucets in common and public use areas. The maximum flow rate of lavatory faucets installed in common and public areas (outside of dwellings or sleeping units) in residential buildings shall not exceed 0.5 gallons per minute at 60 psi.

4.303.1.4.3 Metering faucets. Metering faucets when installed in residential buildings shall not deliver more than 0.25 gallons per cycle.

4.303.1.4.4 Kitchen faucets. The maximum flow rate of kitchen faucets shall not exceed 1.8 gallons per minute at 60 psi. Kitchen faucets may temporarily increase the flow above the maximum rate, but not to exceed 2.2 gallons per minute at 60 psi, and must default to a maximum flow rate of 1.8 gallons per minute at 60 psi.

Note: Where complying faucets are unavailable, aerators or other means may be used to achieve reduction.

4.303.2 Standards for plumbing fixtures and fittings. Plumbing fixtures and fittings shall be installed in accordance with the *California Plumbing Code*, and shall meet the applicable standards referenced in Table 1401.1 of the *California Plumbing Code*.

SECTION 4.304 OUTDOOR WATER USE

4.304.1 Irrigation controllers. Automatic irrigation system controllers for landscaping provided by the builder and installed at the time of final inspection shall comply with the following:

1. Controllers shall be weather- or soil moisture-based controllers that automatically adjust irrigation in response to changes in plants' needs as weather conditions change.
2. Weather-based controllers without integral rain sensors or communication systems that account for local rainfall shall have a separate wired or wireless rain sensor which connects or communicates with the controller(s). Soil moisture-base controllers are not required to have rain sensor input.

Note: More information regarding irrigation controller function and specifications is available from the Irrigation Association.

Division 4.4 – MATERIAL CONSERVATION AND RESOURCE EFFICIENCY

SECTION 4.401 GENERAL

4.401.1 Scope. The provisions of this chapter shall outline means of achieving material conservation and resource efficiency through protection of buildings from exterior moisture; construction waste diversion; employment of techniques to reduce pollution through recycling of materials; and building commissioning or testing, adjusting and balancing.

SECTION 4.406 ENHANCED DURABILITY AND REDUCED MAINTENANCE

4.406.1 Rodent Proofing. Annular spaces around pipes, electric cables, conduits or other openings in sole/bottom plates at exterior walls shall be protected against the passage of rodents by closing such openings with cement mortar, concrete masonry or a similar method acceptable to the enforcing agency.

SECTION 4.408 CONSTRUCTION WASTE REDUCTION, DISPOSAL AND RECYCLING

4.408.1 Construction waste management. Recycle and/or salvage for reuse a minimum of 50 percent of the nonhazardous construction and demolition waste in accordance with either Section 4.408.2, 4.408.3 or 4.408.4, or meet a more stringent local construction and demolition waste management ordinance.

Exceptions:

1. Excavated soil and land-clearing debris.
2. Alternate waste reduction methods developed by working with local agencies if diversion or recycle facilities capable of compliance with this item do not exist or are not located reasonably close to the jobsite.
3. The enforcing agency may make exceptions to the requirements of this section when isolated jobsites are located in areas beyond the haul boundaries of the diversion facility.

4.408.2 Construction waste management plan. Submit a construction waste management plan in conformance with Items 1 through 5. The construction waste management plan shall be updated as necessary and shall be available during construction for examination by the enforcing agency.

1. Identify the construction and demolition waste materials to be diverted from disposal by recycling, reuse on the project or salvage for future use or sale.
2. Specify if construction and demolition waste materials will be sorted on-site (source-separated) or bulk mixed (single stream)
3. Identify diversion facilities where the construction and demolition waste material will be taken.
4. Identify construction methods employed to reduce the amount of construction and demolition waste generated.
5. Specify that the amount of construction and demolition waste materials diverted shall be calculated by weight or volume, but not by both.

4.408.3 Waste management company. Utilize a waste management company, approved by the enforcing agency, which can provide verifiable documentation that the percentage of construction and demolition waste material diverted from the landfill complies with Section 4.408.1.

Note: The owner or contractor may make the determination if the construction and demolition waste materials will be diverted by a waste management company.

4.408.4 Waste stream reduction alternative. Projects that generate a total combined weight of construction and demolition waste disposed of in landfills, which do not exceed four (4) lbs./sq.ft. of the building area shall meet the minimum 50 percent construction waste reduction requirement in Section 4.408.1

4.408.4.1 Waste stream reduction alternative. [HR] Projects that generate a total combined weight of construction and demolition waste disposed of in landfills, which do not exceed two (2) pounds per square foot of the building area, shall meet the minimum 50 percent construction waste reduction requirement in Section 4.408.1.

4.408.5 Documentation. Documentation shall be provided to the enforcing agency which demonstrates compliance with Section 4.408.2, Items 1 through 5, Section 4.408.3 or Section 4.408.4

Notes:

1. Sample forms found in "A Guide to the California Green Building Standards Code (Residential)" located at www.hcd.ca.gov/CALGreen.html may be used to assist in documenting compliance with this section.
2. Mixed construction and demolition debris (CSD) Processors can be located at the California Department of Resources Recycling and Recovery (CalRecycle).

CHAPTER 4
RESIDENTIAL MANDATORY MEASURES

SECTION 4.410 BUILDING MAINTENANCE AND OPERATION

4.410.1 Operation and maintenance manual. At the time of final inspection, a manual, compact disc, web-based reference or other media acceptable to the enforcing agency which includes all of the following shall be placed in the building:

1. Directions to the owner or occupant that the manual shall remain with the building throughout the life cycle of the structure.
2. Operation and maintenance instructions for the following:
   a. Equipment and appliances, including water-saving devices and systems, HVAC systems, water heating systems and other major appliances and equipment.
   b. Roof and yard drainage, including gutters and downspouts.
   c. Space conditioning systems, including condensers and air filters.
   d. Landscape irrigation systems.
   e. Water reuse systems.
3. Information from local utility, water and waste recovery providers on methods to further reduce resource consumption, including recycle programs and locations.
4. Public transportation and/or carpool options available in the area.
5. Educational material on the positive impacts of an interior relative humidity between 30-60 percent and what methods an occupant may use to maintain the relative humidity level in that range.
6. Information about water-conserving landscape and irrigation design and controllers which conserve water.
7. Instructions for maintaining gutters and downspouts and the importance of diverting water at least 5 feet away from the foundation.
8. Information on required routine maintenance measures, including, but not limited to, caulking, painting and grading around the building, etc.
9. Information about state solar energy and incentive programs available.
10. A copy of all special inspection verifications required by the enforcing agency or this code.

Division 4.5 – ENVIRONMENTAL QUALITY

SECTION 4.501 GENERAL

4.501.1 Scope. The provisions of this chapter shall outline means of reducing the quantity of air contaminants that are odorous, irritating and/or harmful to the comfort and well-being of a building's installers, occupants and neighbors.

SECTION 4.503 FIREPLACES

4.503.1 General. Any installed gas fireplace shall be a direct-vent sealed-combustion type. Any installed woodstove or pellet stove shall comply with U.S. EPA Phase II emission limits where applicable. Woodstoves, pellet stoves and fireplaces shall also comply with applicable local ordinances.

SECTION 4.504 POLLUTANT CONTROL

4.504.1 Covering of duct openings and protection of mechanical equipment during construction. At the time of rough installation or during storage on the construction site and until final startup of the heating, cooling and ventilating equipment, all duct and other related air distribution component openings shall be covered with tape, plastic, sheetmetal or other methods acceptable to the enforcing agency to reduce the amount of dust or debris which may enter in the system.

4.504.2 Finish material pollutant control. Finish materials shall comply with this section.

4.504.2.1 Adhesives, sealants and caulks. Adhesives, sealants and caulks used on the project shall meet the requirements of the following standards unless more stringent local or regional air pollution or air quality management district rules apply:

1. Adhesives, adhesive bonding primers, adhesive primers, sealants, sealant primers, and caulks shall comply with local or regional air pollution control or air quality management district rules where applicable or SCAQMD Rule 1168 VOC limits, as shown in Table 4.504.1 or 4.504.2, as applicable. Such products also shall comply with the Rule 1168 prohibition on the use of certain toxic compounds (chloroform, ethylene dichloride, methylene chloride, perchloroethylene, and trichloroethylene), except for aerosol products, as specified in Subsection 2 below.
2. Aerosol adhesives, and smaller unit sizes of adhesives, and sealant or caulking compounds (in units of product, less packaging, which do not weigh more than 1 pound and do not consist of more than 16 fluid ounces) shall comply with statewide VOC standards and other requirements, including prohibitions or use of certain toxic compounds, of *California Code of Regulations*, Title 17, commencing with Section 94507.

4.504.2.2 Paints and coatings. Architectural paints and coatings shall comply with VOC limits in Table 1 of the ARB Architectural Suggested Control Measure, as shown in Table 4.504.3, unless more stringent local limits apply. The VOC content limit for coatings that do not meet the definitions for the specialty coatings categories listed in Table 4.504.3 shall be determined by classifying the coating as a Flat, Nonflat or Nonflat-High Gloss coating, based on its gloss, as defined in subsections 4.21, 4.36, and 4.37 of the 2007 California Air Resources Board, Suggested Control Measure, and the corresponding Flat, Nonflat or Nonflat-High Gloss VOC limit in Table 4.504.3 shall apply.

4.504.2.3 Aerosol paints and coatings. Aerosol paints and coatings shall meet the Product-Weighted MIR Limits for ROC in Section 94522(a)(3) and other requirements, including prohibitions on use of certain toxic compounds and ozone depleting substances, in Sections 94522(c)(2) and 94522 of *California Code of Regulations*, Title 17, commencing with Section 94520, and in areas under the jurisdiction of the Bay Area Air Quality Management District additionally comply with the percent VOC by weight of product limits of Regulation 8, Rule 49.

4.504.2.4 Verification. Verification of compliance with this section shall be provided at the request of the enforcing agency. Documentation may include, but is not limited to the following:

1. Manufacturer's product specification.
2. Field verification of on-site product containers.

4.504.3 Carpet systems. All carpet installed in the building interior shall meet the testing and product requirements of one of the following:

1. Carpet and Rug Institute's Green Label Plus Program.
2. California Department of Public Health, "Standard Method for the Testing and Evaluation of Volatile Organic Chemical Emission from Indoor Sources Using Environmental Chambers," Version 1.1, February 2010 (also known as Specification 01350).
3. NSF/ANSI 140 at the Gold level.
4. Scientific Certifications Systems Indoor Advantage™ Gold.

4.504.3.1 Carpet cushion. All carpet cushion installed in the building interior shall meet the requirements of the Carpet and Rug institute's Green Label program.

4.504.3.2 Carpet adhesive. All carpet adhesive shall meet the requirements of Table 4.504.1.

4.504.4 Resilient flooring systems. Where resilient flooring is installed, at least 80 percent of floor area receiving resilient flooring shall comply with one or more of the following:

1. VOC emission limits defined in the Collaborative for High Performance Schools (CHPS) High Performance Products Database.
2. Products compliant with CHPS criteria certified under the Greenguard Children & Schools program.
3. Certification under the Resilient Floor Covering Institute (RFCI) FloorScore program.
4. Meet the California Department of Public Health, "Standard Method for the Testing and Evaluation of Volatile Organic Chemical Emissions from Indoor Sources Using Environmental Chambers." Version 1.1 February 2010 (also known as specification 01350)

4.504.5 Composite wood products. Hardwood plywood, particleboard and medium density fiberboard composite wood products used on the interior or exterior of the building shall meet the requirements for formaldehyde as specified in ARB's Air Toxics Control Measure for Composite Wood (17 CCR 93120 et seq.), by or before the dates specified in those sections, as shown in Table 4.504.5.

TABLE 4.504.5
FORMALDEHYDE LIMITS[1]
Maximum Formaldehyde Emissions in Parts per Million

PRODUCT	CURRENT LIMIT
Hardwood plywood veneer core	3.05
Hardwood plywood composite core	3.05
Particleboard	3.09
Medium density fiberboard	0.11
Thin medium density fiberboard[2]	0.13

1. Values in this table are derived from those specified by the California Air Resources Board, Air Toxics Control Measure for Composite Wood as tested in accordance with ASTM E 1333. For additional information, see *California Code of Regulations*, Title 17, Sections 93120 through 93120.12.
2. Thin medium density fiberboard has a maximum thickness of 5/16 inch (8 mm).

4.504.5.1 Documentation. Verification of compliance with this section shall be provided as requested by the enforcing agency. Documentation shall include at least one of the following:

1. Product certifications and specifications
2. Chain of custody certifications
3. Product labeled and invoiced as meeting the Composite Wood Products regulation (see CCR, Title 17, Section 93120, et seq.).
4. Exterior grade products marked as meeting the PS-1 or PS-2 standards of the Engineered Wood Association, the Australian AS/NZS 2269 or European 636 3S standards.
5. Other methods acceptable to the enforcing agency.

SECTION 4.505 INTERIOR MOISTURE CONTROL

4.505.1 General. Buildings shall meet or exceed the provisions of the *California Building Standards Code*.

4.505.2 Concrete slab foundations. Concrete slab foundations required to have a vapor retarder by *California Building Code*, Chapter 19 or concrete slab-on-ground floors required to have a vapor retarder by the *California Residential Code*, Chapter 5, shall also comply with this section.

4.505.2.1 Capillary break. A capillary break shall be installed in compliance with at least one of the following:

1. A 4-inch (101.6 mm) thick base of ½ inch (12.7 mm) or larger clean aggregate shall be provided with a vapor barrier in direct contact with concrete and a concrete mix design, which will address bleeding, shrinkage and curling, shall be used. For additional information, see American Concrete Institute, ACI 302.2R-06.
2. Other equivalent methods approved by the enforcing agency.
3. A slab design specified by a licensed design professional.

4.505.3 Moisture content of building materials. Building materials with visible signs of water damage shall not be installed. Wall and floor framing shall not be enclosed when the framing members exceed 19 percent moisture content. Moisture content shall be verified in compliance with the following:

1. Moisture content shall be determined with either a pocbe-type or contact-type moisture meter. Equivalent moisture verification methods may be approved by the enforcing agency and shall satisfy requirements found in Section 101.8 of this code.
2. Moisture readings shall be taken at a point 2 feet (610 mm) to 4 feet (1219 mm) from the grade stamped end of each piece to be verified.
3. At least three random moisture readings shall be performed on wall and floor framing with documentation acceptable to the enforcing agency provided at the time of approval to enclose the wall and floor framing.

Insulation products which are visibly wet or have a high moisture content shall be replaced or allowed to dry prior to enclosure in wall or floor cavities. Wet-applied insulation products shall follow the manufacturers' drying recommendations prior to enclosure.

CHAPTER 4
RESIDENTIAL MANDATORY MEASURES

SECTION 4.506 INDOOR AIR QUALITY AND EXHAUST

4.506.1 Bathroom exhaust fans. Each bathroom shall be mechanically ventilated and shall comply with the following:

1. Fans shall be ENERGY STAR compliant and be ducted to terminate outside the building.
2. Unless functioning as a component of a whole house ventilation system, fans must be controlled by a humidity control.
   a. Humidity controls shall be capable of adjustment between a relative humidity range of ≤ 50 percent to a maximum of 80 percent. A humidity control may utilize manual or automatic means of adjustment.
   b. A humidity control may be a separate component to the exhaust fan and is not required to be integral (i.e., built-in).

Notes:

1. For the purposes of this section, a bathroom is a room which contains a bathtub, shower or tub/shower combination.
2. Lighting integral to bathroom exhaust fans shall comply with the *California Energy Code*.

SECTION 4.507 ENVIRONMENTAL COMFORT

4.507.2 Heating and air-conditioning system design. Heating and air-conditioning systems shall be sized, designed and have their equipment selected using the following methods:

1. The heat loss and heat gain is established according to ANSI/ACCA 2 Manual J—2004 (Residential Load Calculation), ASHRAE handbooks or other equivalent design software or methods.
2. Duct systems are sized according to ANSI/ACCA 1 Manual D—2009 (Residential Duct Systems), ASHRAE handbooks or other equivalent design software or methods.
3. Select heating and cooling equipment according to ANSI/ACCA 3 Manual S—2004 (Residential Equipment Selection) or other equivalent design software or methods.

Exception: Use of alternate design temperatures necessary to ensure the systems function are acceptable.

TABLE 4.504.1
ADHESIVE VOC LIMIT[1, 2]
Less Water and Less Exempt Compounds in Grams per Liter

ARCHITECTURAL APPLICATIONS	CURRENT VOC LIMIT
Indoor carpet adhesives	50
Carpet pad adhesives	50
Outdoor carpet adhesives	150
Wood flooring adhesive	100
Rubber floor adhesives	60
Subfloor adhesives	50
Ceramic tile adhesives	65
VCT and asphalt tile adhesives	50
Drywall and panel adhesives	50
Cove base adhesives	50
Multipurpose construction adhesives	70
Structural glazing adhesives	100
Single-ply roof membrane adhesives	250
Other adhesives not specified in listed	50
SPECIALTY APPLICATIONS	
PVC welding	510
CPVC welding	490
ABS welding	325
Plastic cement welding	250
Adhesive primer for plastic	550
Contact adhesive	80
Special purpose contact adhesive	250
Structural wood member adhesive	140
Top and trim adhesive	250
SUBSTRATE SPECIFIC APPLICATIONS	
Metal to metal	30
Plastic foams	50
Porous material (except wood)	50
Wood	30
Fiberglass	80

1. If an adhesive is used to bond dissimilar substrates together, the adhesive with the highest VOC content shall be allowed.
2. For additional information regarding methods to measure the VOC content specified in this table, see South Coast Air Quality Management District Rule 1168.

TABLE 4.504.2
SEALANT VOC LIMIT
Less Water and Less Exempt Compounds in Grams per Liter

SEALANTS	CURRENT VOC LIMIT
Architectural	250
Marine deck	760
Nonmembrane roof	300
Roofing	250
Single-ply roof membrane	450
Other	420
SEALANT PRIMERS	
Architectural	
Nonporous	250
Porous	775
Modified bituminous	500
Marine deck	760
Other	750

TABLE 4.504.3
VOC CONTENT LIMITS FOR ARCHITECTURAL COATINGS[1, 2]
Grams of VOC per Liter of Coating, Less Water and Less Exempt Compounds

COATING CATEGORY	EFFECTIVE 1/1/2011	EFFECTIVE 1/1/2012
Flat coatings	50	
Nonflat coatings	100	
Nonflat high gloss coatings	150	
SPECIALTY COATINGS		
Bituminous roof coatings	400	
Bituminous roof coatings	400	
Bituminous roof coatings	50	
Bituminous roof primers	350	
Bond breakers	350	
Concrete curing components	350	
Concrete/masonry sealers	100	
Driveway sealers	50	
Dry fog coatings	150	
Faux finishing coatings	350	
Fire resistive coatings	350	
Floor coatings	100	
Form release compounds	250	
Graphic arts coatings (sign paints)	500	
High temperature coatings	420	
Industrial maintenance coatings	250	
Low solids coatings[3]	120	
Magnesite cement coatings	450	
Mastic texture coatings	100	
Metallic pigmented coatings	500	
Multicolor coatings	250	
Pretreatment wash primers	420	
Primers, sealers, and undercoaters	100	
Reactive penetrating sealers	350	
Recycled coatings	250	
Roof coatings	50	
Roof preservative coatings	400	250
Shellac		
Clear	730	
Opaque	550	
Specialty primers, sealers and undercoaters	350	100
Stains	250	
Stone consolidants	450	
Swimming pool coatings	340	
Traffic marking coatings	100	
Tub and tile refinish coatings	420	
Waterproofing membranes	250	
Wood coatings	275	
Wood preservatives	350	
Zinc-rich primers	340	

1. Grams of VOC per liter of coating, including water and including exempt compounds.
2. The specified limits remain in effect unless revised limits are listed in subsequent columns in the table.
3. Values in this table are derived from those specified by the California Air Resources Board, Architectural Coatings Suggested Control Measure, February 1, 2008. More information is available from the Air Resources Board.

KPI Inc.
KNITTER PARTNERS INTERNATIONAL, INC.
architecture & planning
1401 DOVE ST. SUITE 240
NEWPORT BEACH, CA 92660
PHONE: (949) 752-1177
FAX: (949) 752-0151
WWW.KNITTER.COM

©KNITTER PARTNERS INTERNATIONAL
ALL RIGHTS RESERVED 2013

THIS DOCUMENT IS THE PROPERTY AND COPYRIGHT OF KNITTER PARTNERS INTERNATIONAL, INC. AND SHALL NOT BE USE ON ANY OTHER WORK, BE REPRODUCED OR DISCLOSED TO OTHERS EXCEPT BY WRITTEN AUTHORIZATION FROM KNITTER PARTNERS INTERNATIONAL, INC.

NO.	DATE	REVISION
△		
△		
△		
△		
△		

IMAGINE DEVELOPMENT L.L.C.

THE COLONY 65
LANCASTER, CALIFORNIA

LICENSED ARCHITECT
MICHAEL J. KNITTER
C10524
REN. 4-30-15
STATE OF CALIFORNIA

PROJECT INFO
GENERAL
JOB NUMBER **3036**
PROJECT MGR. RC
DRAWN BY
ISSUE DATE: 10-24-14

SHEET TITLE
ARCHITECTURAL CAL-GREEN REQUIREMENTS

SHEET NUMBER
ACG-1

PLOT TIME: 11:02 AM PATH\NAME: G:\0_KPI\2013\13036 COLONY 65 PLANS\NONPLAN\3036 00 GEN NOTES.DCS

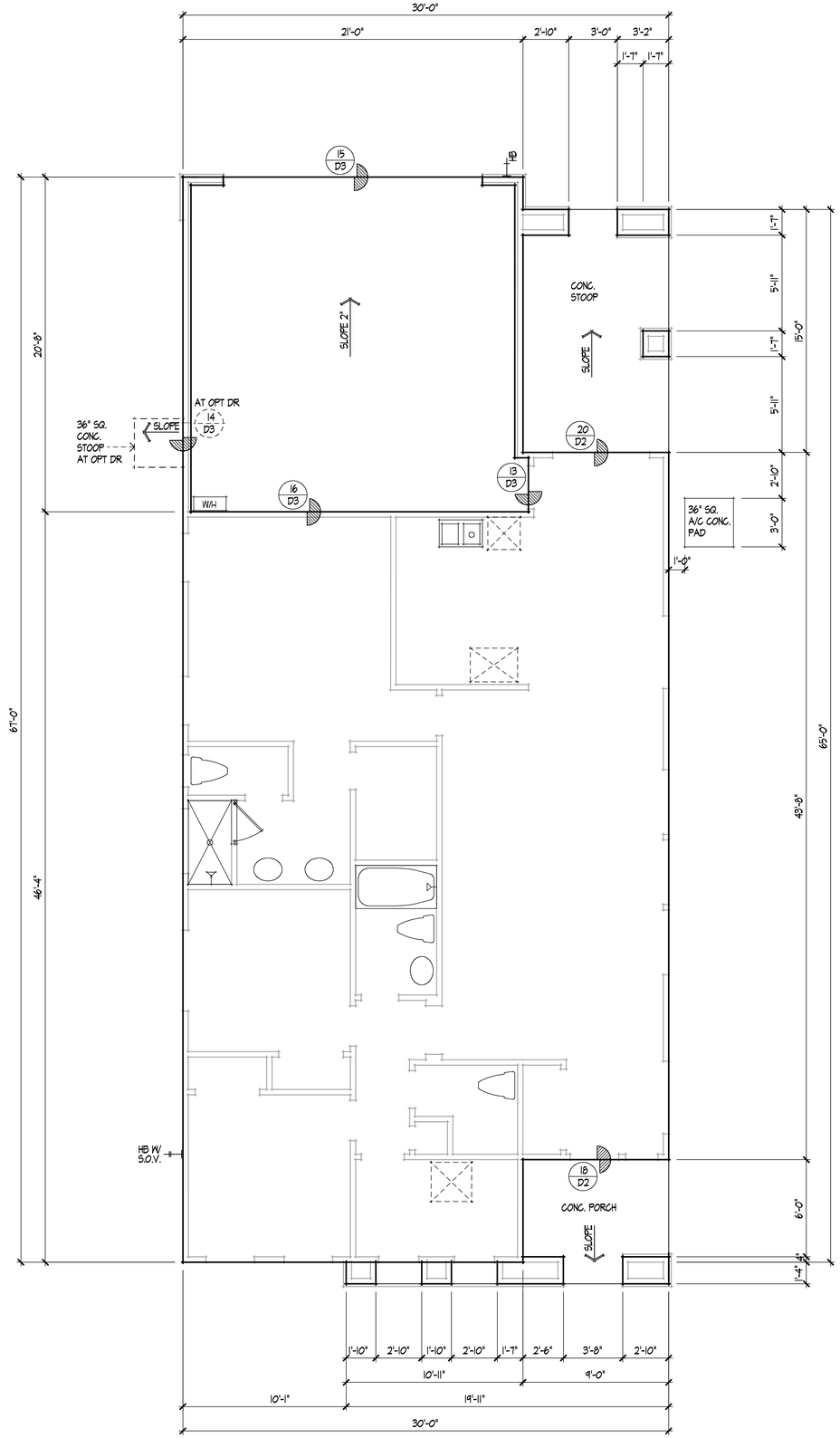

SLAB INTERFACE PLAN - A

SCALE: 1/4" = 1'-0"

CONCRETE PLACEMENT

THE FOLLOWING ARE ARCHITECTUAL MINIMUM STANDARDS ONLY. REFER TO PROJECT SOILS REPORT AND STRUCTURAL ENGINEERS DRAWINGS FOR NOTES AND INFORMATION NOT SHOWN HERE.

CONCRETE SLABS:

CONCRETE SLABS SHALL BE PLACED OVER A MINIMUM OF 1" CLEAN DAMP SAND OVER 6 MIL. VISQUEEN OVER 1" CLEAN DAMP SAND.

CONCRETE STOOPS:

CONCRETE STOOPS SHALL BE PROVIDED AT EACH EXTERIOR DOOR.
STOOP SHALL BE A MINIMUM OF 1'-0" WIDER THAN THE DOOR 6" EACH SIDE.
STOOP SHALL PROJECT A MINIMUM OF 36" IN FRONT OF DOOR OPENING.
STOOP SHALL BE A MIN. OF 3-1/2" THICK.
STOOP SHALL BE ATTATCHED TO HOUSE W/ # 4 REBARS AT 24" O/C. (MINIMUM 2)

CONCRETE PORCHES:

CONCRETE PORCHES SHALL BE PROVIDED AT THE FRONT OR MAIN ENTRY DOOR.
PORCH DIMENSIONS ARE NOTED ON PLANS.
PORCH SHALL BE A MINIMUM OF 3-1/2" THICK.
PORCH SHALL BE ATTATCHED TO HOUSE W/ # 4 REBARS AT 24" O/C. (MINIMUM 2)
EXCEPTION , WOOD PORCHES. SEE PLAN.

INDICATES DROP IN SLAB (SEE DETAILS)

DRIVEWAYS AND FLATWORK :

SEE CIVIL ENGINEERING DRAWING FOR DRIVEWAYS AND FLATWORK.

REFER TO GENERAL NOTES SHEET G-1 DIV. 3 FOR FURTHER ARCHITECTURAL CONCRETE MINIMUM REQUIRMENTS.

DEPARTMENT OF PUBLIC WORKS

PRIOR TO REQUESTING A FOUNDATION INSPECTION, THE ENGINEER OF RECORD SHALL FIELD VERIFY THE BUILDING PAD HEIGHT AND SUBMIT A LETTER TO THE CITY ENGINEER CERTIFYING THE BUILDING PAD HEIGHT AS COMPLYING W/ THE APPROVED GRADING PLAN.

**ARCHITECTURAL REFERENCE ONLY.
SEE STRUCTURAL ENGINEERS PLANS
FOR STRUCTURAL INFORMATION
NOT SHOWN HERE**

KPI Inc.
KNITTER PARTNERS INTERNATIONAL, INC.
architecture & planning
1401 DOVE ST. SUITE 240
NEWPORT BEACH, CA 92660
PHONE: (949) 752-1177
FAX: (949) 752-0151
WWW.KNITTER.COM

©KNITTER PARTNERS INTERNATIONAL
ALL RIGHTS RESERVED 2013

THIS DOCUMENT IS THE PROPERTY AND COPYRIGHT OF KNITTER PARTNERS INTERNATIONAL, INC. AND SHALL NOT BE USE ON ANY OTHER WORK, BE REPRODUCED OR DISCLOSED TO OTHERS EXCEPT BY WRITTEN AUTHORIZATION FROM KNITTER PARTNERS INTERNATIONAL, INC.

NO.	DATE	REVISION
△		
△		
△		
△		
△		

IMAGINE DEVELOPMENT L.L.C.

THE COLONY 65
LANCASTER, CALIFORNIA

LICENSED ARCHITECT
MICHAEL J. KNITTER
C10524
REN. 4-30-19
STATE OF CALIFORNIA

PROJECT INFO
PLAN 1

JOB NUMBER **3036**
PROJECT MGR. RC
DRAWN BY RC
PLOT DATE: 3-19-2018

SHEET TITLE
SLAB INTERFACE PLAN A

SHEET NUMBER
1.1

PLOT TIME: 12:37 PM PATH\NAME: G:\0_KPI\2013\13036 COLONY 65 PLANS\PLAN 1\3036 10 PLAN 1.DC5

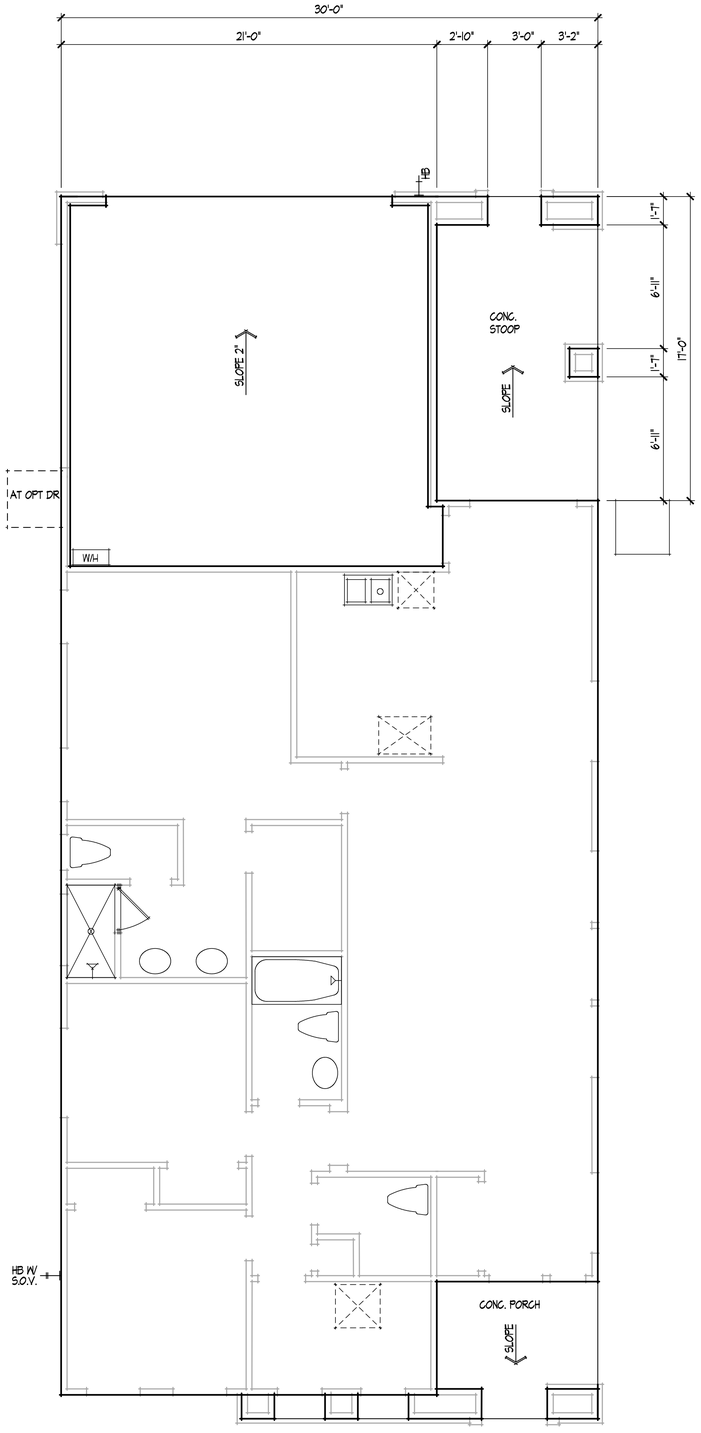

SLAB INTERFACE PLAN ADDENDUM - B

SCALE: 1/4" = 1'-0"

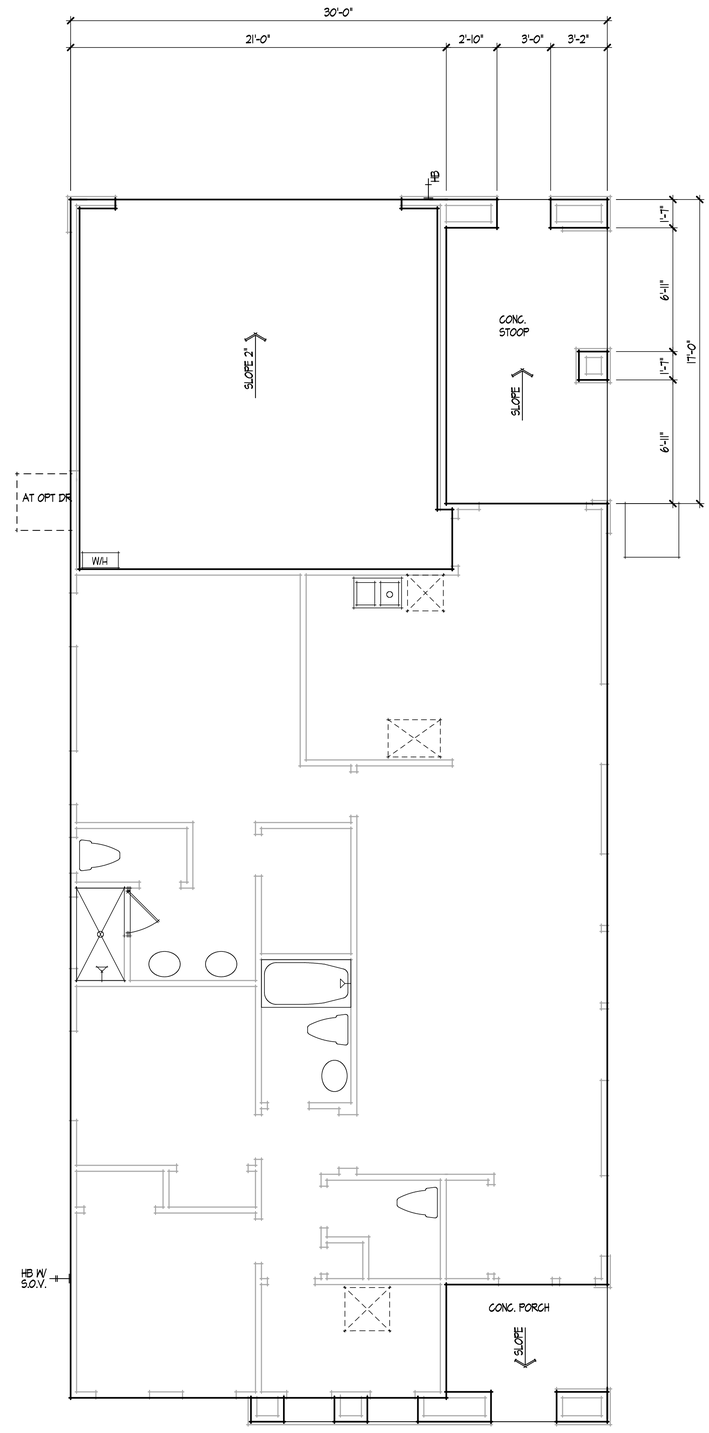

SLAB INTERFACE PLAN ADDENDUM - C

SCALE: 1/4" = 1'-0"

PLOT TIME: 12:37 PM PATH\NAME: G:\O_KPI\2013\13036 COLONY 65 PLANS\PLAN 1\3036 11 PLAN 1 ADDENDA.DC5

KPI Inc.
KNITTER PARTNERS INTERNATIONAL, INC.
architecture & planning
1401 DOVE ST. SUITE 240
NEWPORT BEACH, CA 92660
PHONE: (949) 752-1177
FAX: (949) 752-0151
WWW.KNITTER.COM

©KNITTER PARTNERS INTERNATIONAL
ALL RIGHTS RESERVED 2013

THIS DOCUMENT IS THE PROPERTY AND COPYRIGHT OF KNITTER PARTNERS INTERNATIONAL, INC. AND SHALL NOT BE USE ON ANY OTHER WORK, BE REPRODUCED OR DISCLOSED TO OTHERS EXCEPT BY WRITTEN AUTHORIZATION FROM KNITTER PARTNERS INTERNATIONAL, INC.

NO.	DATE	REVISION
△		
△		
△		
△		
△		

IMAGINE DEVELOPMENT L.L.C.

THE COLONY 65
LANCASTER, CALIFORNIA

LICENSED ARCHITECT
MICHAEL J. KNITTER
C10524
REN. 4-30-19
STATE OF CALIFORNIA

PROJECT INFO
PLAN 1

JOB NUMBER **3036**
PROJECT MGR. RC
DRAWN BY AD
PLOT DATE: 3-19-2018

SHEET TITLE
SLAB INTERFACE ADDENDA

SHEET NUMBER
1.1.1

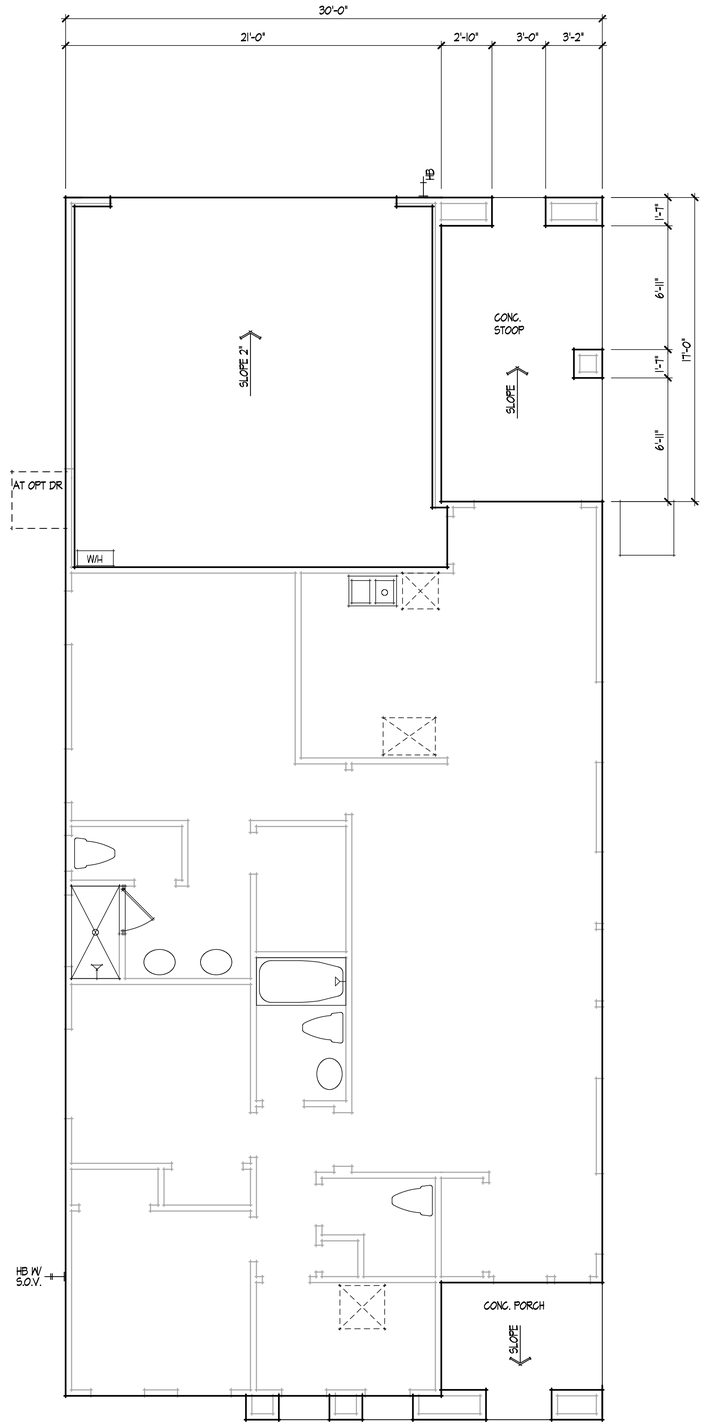

SLAB INTERFACE PLAN ADDENDUM - D

SCALE: 1/4" = 1'-0"

KPI Inc.
KNITTER PARTNERS INTERNATIONAL, INC.
architecture & planning
1401 DOVE ST. SUITE 240
NEWPORT BEACH, CA 92660
PHONE: (949) 752-1177
FAX: (949) 752-0151
WWW.KNITTER.COM

©KNITTER PARTNERS INTERNATIONAL
ALL RIGHTS RESERVED 2013

THIS DOCUMENT IS THE PROPERTY AND COPYRIGHT OF KNITTER PARTNERS INTERNATIONAL, INC. AND SHALL NOT BE USE ON ANY OTHER WORK, BE REPRODUCED OR DISCLOSED TO OTHERS EXCEPT BY WRITTEN AUTHORIZATION FROM KNITTER PARTNERS INTERNATIONAL, INC.

NO.	DATE	REVISION
△		
△		
△		
△		
△		

IMAGINE DEVELOPMENT L.L.C.

THE COLONY 65
LANCASTER, CALIFORNIA

LICENSED ARCHITECT
MICHAEL J. KNITTER
C10524
REN. 4-30-19
STATE OF CALIFORNIA

PROJECT INFO
PLAN 1

JOB NUMBER **3036**
PROJECT MGR. RC
DRAWN BY AD
PLOT DATE: 3-6-2018

SHEET TITLE
SLAB INTERFACE PLAN ADDENDUM D

SHEET NUMBER
1.1.2

PLOT TIME: 11:06 AM PATH\NAME: G:\O_KPI\2013\13036 COLONY 65 PLANS\PLAN 1\3036 11 PLAN 1 ADDENDUM D.DC5

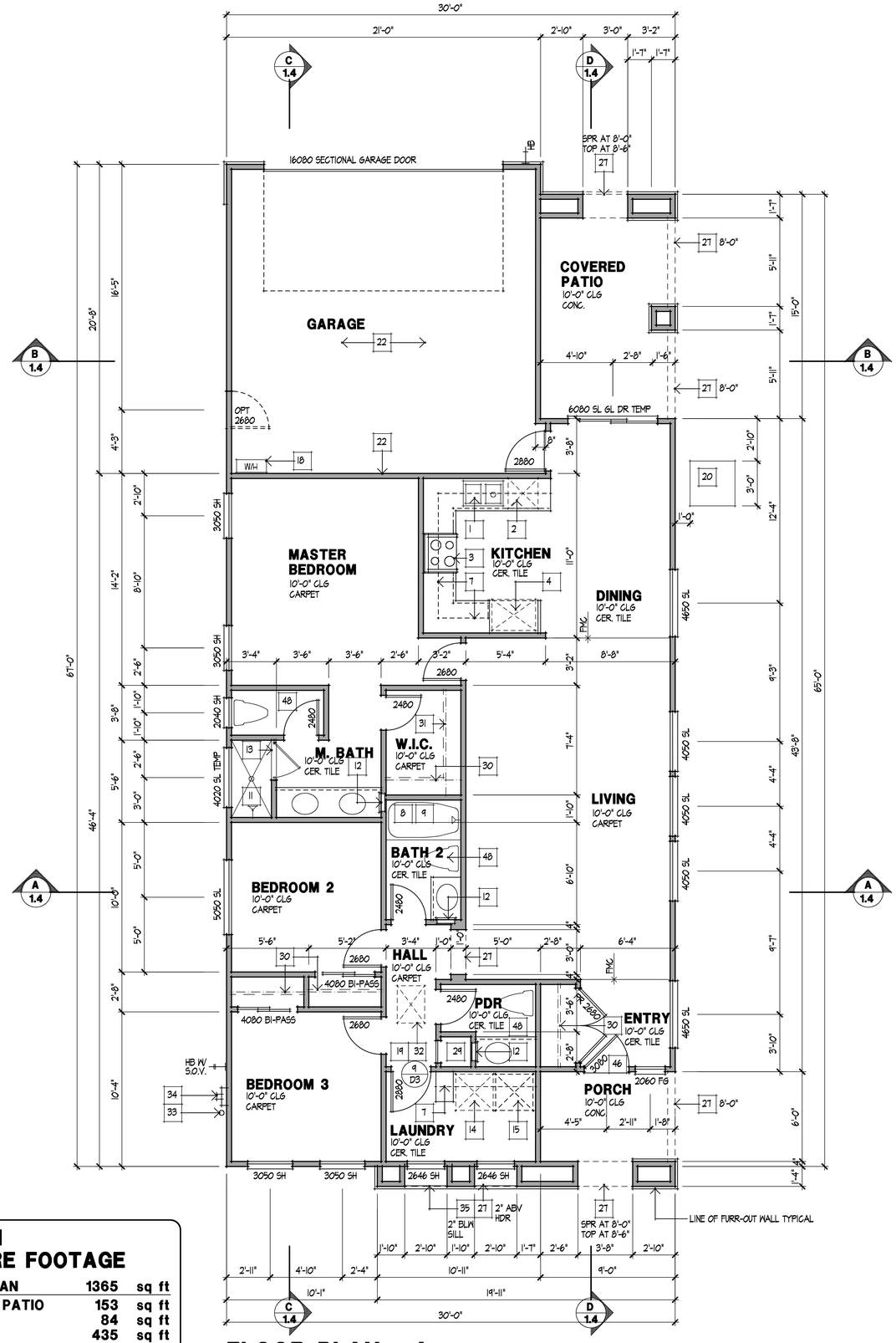

FLOOR PLAN - A

SCALE: 1/4" = 1'-0"

PLAN 1 SQUARE FOOTAGE

FLOOR PLAN	1365	sq ft
COVERED PATIO	153	sq ft
PORCH	84	sq ft
GARAGE	435	sq ft

FOR ARCHITECTS USE ONLY - DIMENSIONS TAKEN TO FACE OF STUDS

FLOOR PLAN NOTES

1. DOUBLE SINK WITH GARBAGE DISPOSAL (REFER TO INTERIOR ELEVATIONS)
2. BUILT IN DISHWASHER WITH AIR GAP (REFER TO INTERIOR ELEV'S)
3. SLIDE-IN COOKTOP RANGE WITH EXHAUST HOOD (MIN. 100 CFM) AND MICROWAVE OVEN ABOVE AND CONVENTIONAL OVEN BELOW (VENT TO O.S.A.)
4. PROVIDE 34" REFRIGERATOR SPACE (PROVIDE PLUMBING RECESSED IN WALL FOR ICE MAKER)
5. 30" WIDE MICROWAVE OVEN OVER CONVENTIONAL OVEN (REFER TO INTERIOR ELEVATIONS, VERIFY WITH MANUFACTURERS SPEC'S)
6. PANTRY WITH ADJUSTABLE SHELVES U.N.O. (REFER TO INTERIOR ELEVATIONS)
7. LINE OF CABINET/SHELF ABOVE (REFER TO INTERIOR ELEVATIONS)
8. PROVIDE CURTAIN ROD
9. 32" X 60" FIBERGLASS TUB WITH SHOWER TO 72" A.F.F. WITH SHOWER HEAD AT +80" A.F.F.
10. 42" X 60" FIBERGLASS OVAL TUB ON 18" HIGH MOISTURE RESISTANT PLATFORM
11. 1022" X 42" FIBERGLASS TUB/SHOWER WITH WAINSCOT TO 78" ABOVE FINISH FLOOR AND SHOWER HEAD AT 80" A.F.F.
12. RECESSED MEDICINE CABINET (REFER TO INTERIOR ELEVATIONS)
13. SHATTER RESISTANT SHOWER ENCLOSURE-FULLY TEMPERED OR LAMINATED SAFETY GLASS
14. WASHER SPACE (PROVIDE RECESS NICHE IN WALL FOR PLUMBING AND PROVIDE WASTE LINE)/PROVIDE A "SMITTY" PAN W/ DRAIN TO BE TIED INTO A FIXTURE DRAIN BELOW WHEN WASHER IS LOCATED ON THE SECOND FLOOR)
15. DRYER SPACE (VENT TO O.S.A.)
16. LINE OF EXHAUST VENT
17. BACK DRAFT DAMPER
18. WATER HEATER PER CMC
    - PROVIDE SEISMIC STRAPS AT POINTS WITHIN THE UPPER AND LOWER ONE-THIRD OF ITS VERTICAL DIMENSION. LOWER STRAP LOCATED TO MAINTAIN MIN. 4" DISTANCE ABOVE CONTROLS.
    - PLACE W/H ON 18" HIGH RIGID PLATFORM.
    - PROVIDE P.T. RELIEF VALVE TO OUTSIDE OR APPROVED DRAIN
19. FORCED AIR UNIT PER CMC
    - PROVIDE RIGID WOOD PLATFORM W/ RAG (14" MIN.)
    - PROVIDE CONDENSATE LINE TO DRAIN OUTSIDE OR APPROVED TRAPPED DRAIN(REFER TO HVAC DRAWINGS)
    - VERIFY SIZE AND CLEARANCE
    - PROVIDE COMBUSTION AIR AS REQUIRED
20. AIR CONDITIONER PAD (VARIFY SIZE WITH MANUFACTURER)
21. PEDESTAL SINK
22. INTERIOR GARAGE FINSH REFER TO SHEET GN3 OR GN4.

23A. METAL FIREPLACE (REFER TO GENERAL NOTES - DIVISION 10)

23B. GAS APPLIANCE (REFER TO GENERAL NOTES - DIVISION 10)

24. NONCOMBUSTIBLE HEARTH-MINIMUM 20" IN FRONT OF & 12" ON EACH SIDE OF FIREPLACE OPENING
25. LAUNDRY SINK
26. LINE OF SHELF (REFER TO PLAN FOR HEIGHT)
27. LINE OF SOFFIT ABOVE
28. LINE OF SHELF ABOVE (REFER TO PLAN FOR HEIGHT)
29. LINEN (REFER TO INTERIOR ELEVATIONS)
30. SHELF AND POLE
31. SHELF AND DOUBLE POLE
32. 20" x 30" MIN. (x MIN. 30" CLEAR HEADROOM) ATTIC ACCESS - CRC R807.1 (22" X 30" MIN. W/ ATTIC MTD. FAU - CMC 904.11.1)
33. GAS CO. SERVICE RISER (VERIFY LOCATION WITH UTILITY CO.)
34. ELECTRIC SERVICE MAIN. PROVIDE UFER GROUND (VERIFY LOCATION WITH UTILITY COMPANY)
35. LOW WALL (REFER TO PLAN FOR HEIGHT)
36. PROVIDE 1/2" GYPSUM BOARD AT WALLS & SOFFITS OF ENCLOSED USABLE SPACE UNDER STAIRS PER CRC SECTION R302.7
37. RAILING - REFER TO DETAIL 5/D3
38. GUARDRAIL - REFER TO DETAIL 5/D3
39. WALL MOUNTED HANDRAIL - REFER TO DETAIL 6/D3
40. LINE OF FLOOR ABOVE
41. LINE OF WALL BELOW
42. HAND MADE SHOWER PAN. SEE PLAN FOR SIZE.
43. DUCT CHASE
44. FIREPLACE FLUE PER UMC
45. KITCHEN ISLAND-SEE INTERIORS
46. DEAD BOLT AT TOP AND BOTTOM OF ENTRY DOOR, AND TOP ONLY OF INTERIOR DOORS
47. CEILING BREAK
48. WATER CLOSET (MAXIMUM 1.6 GALLONS PER FLUSH)
49. 36" HIGH STL. PIPE BUMPER
50. ELDORADO STONE (ER-602) OR APPROVED EQUAL

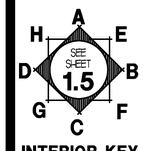

INTERIOR KEY

WALL FRAMING LEGEND

2X4 STUD WALL

2X6 STUD WALL

ALL SOFFITS SHALL BE 1'-0" BELOW CEILING U.N.O.

GENERAL PLAN NOTES

1) ALL INTERIOR DOORS TO BE HOLLOW CORE 1 3/8" THK. U.N.O. (REFER TO PLAN FOR SIZE)
2) ALL GARAGE MAN DOORS TO BE HOLLOW CORE 1 3/8" THK. EXTERIOR GRADE (REFER TO PLAN FOR SIZE)
3) ALL HOUSE TO GARAGE DOORS TO BE 20 MINUTE FIRE RATED OR SOLID CORE, SOLID WOOD OR HONEYCOMB CORE STEEL 1 3/8" THK. WITH SELF CLOSER AND SELF LATCHING AND TIGHT FITTING (REFER TO PLAN FOR SIZE)
4) ALL ENTRY DOORS AND TO BE SOLID CORE 1 3/4" THICK. (REFER TO PLAN FOR SIZE)
5) PROVIDE 100 SQ. IN. OF MAKE UP AIR AT THE LAUNDRY ROOM. (TO REPLACE AIR BEING EXHAUSTED BY DRYER VENT AND EXHAUST FAN IF APPLICABLE) PER CMC 504.3.2

KPI Inc.

KNITTER PARTNERS INTERNATIONAL, INC.
architecture & planning

1401 DOVE ST. SUITE 240
NEWPORT BEACH, CA 92660
PHONE: (949) 752-1177
FAX: (949) 752-0151
WWW.KNITTER.COM

©KNITTER PARTNERS INTERNATIONAL
ALL RIGHTS RESERVED 2013

THIS DOCUMENT IS THE PROPERTY AND COPYRIGHT OF KNITTER PARTNERS INTERNATIONAL, INC. AND SHALL NOT BE USE ON ANY OTHER WORK, BE REPRODUCED OR DISCLOSED TO OTHERS EXCEPT BY WRITTEN AUTHORIZATION FROM KNITTER PARTNERS INTERNATIONAL, INC.

NO.	DATE	REVISION

IMAGINE DEVELOPMENT L.L.C.

THE COLONY 65
LANCASTER, CALIFORNIA

LICENSED ARCHITECT
MICHAEL J. KNITTER
C10524
REN. 4-30-19
STATE OF CALIFORNIA

PROJECT INFO

PLAN 1

JOB NUMBER **3036**
PROJECT MGR. RC
DRAWN BY RC
PLOT DATE: 3-19-2018

SHEET TITLE

FLOOR PLAN A

SHEET NUMBER

1.2

PLOT TIME: 12:37 PM PATH\NAME: G:\0_KPI\2013\13036 COLONY 65 PLANS\PLAN 1\3036 10 PLAN 1.DC5

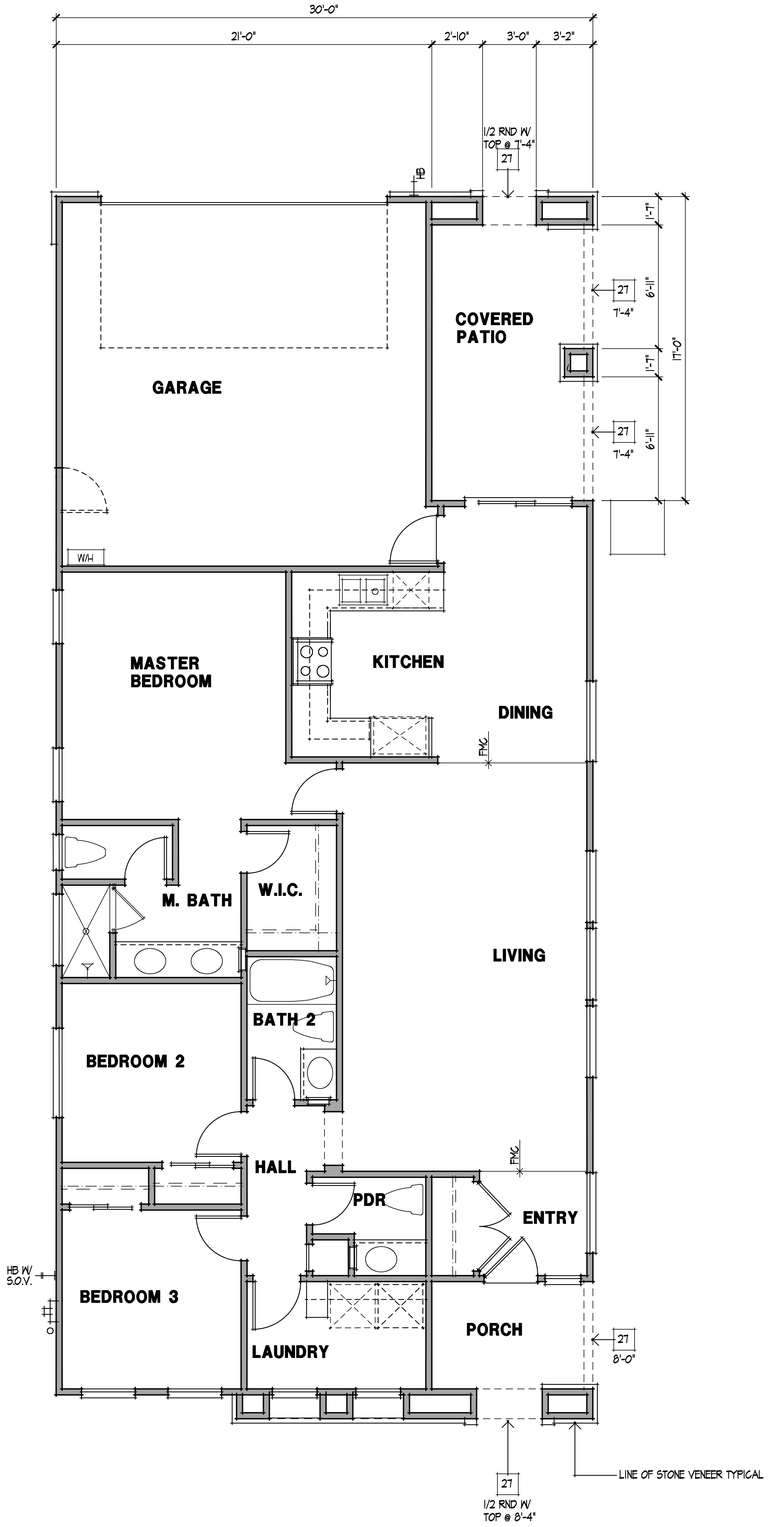

FLOOR PLAN ADDENDUM - B

SCALE: 1/4" = 1'-0"

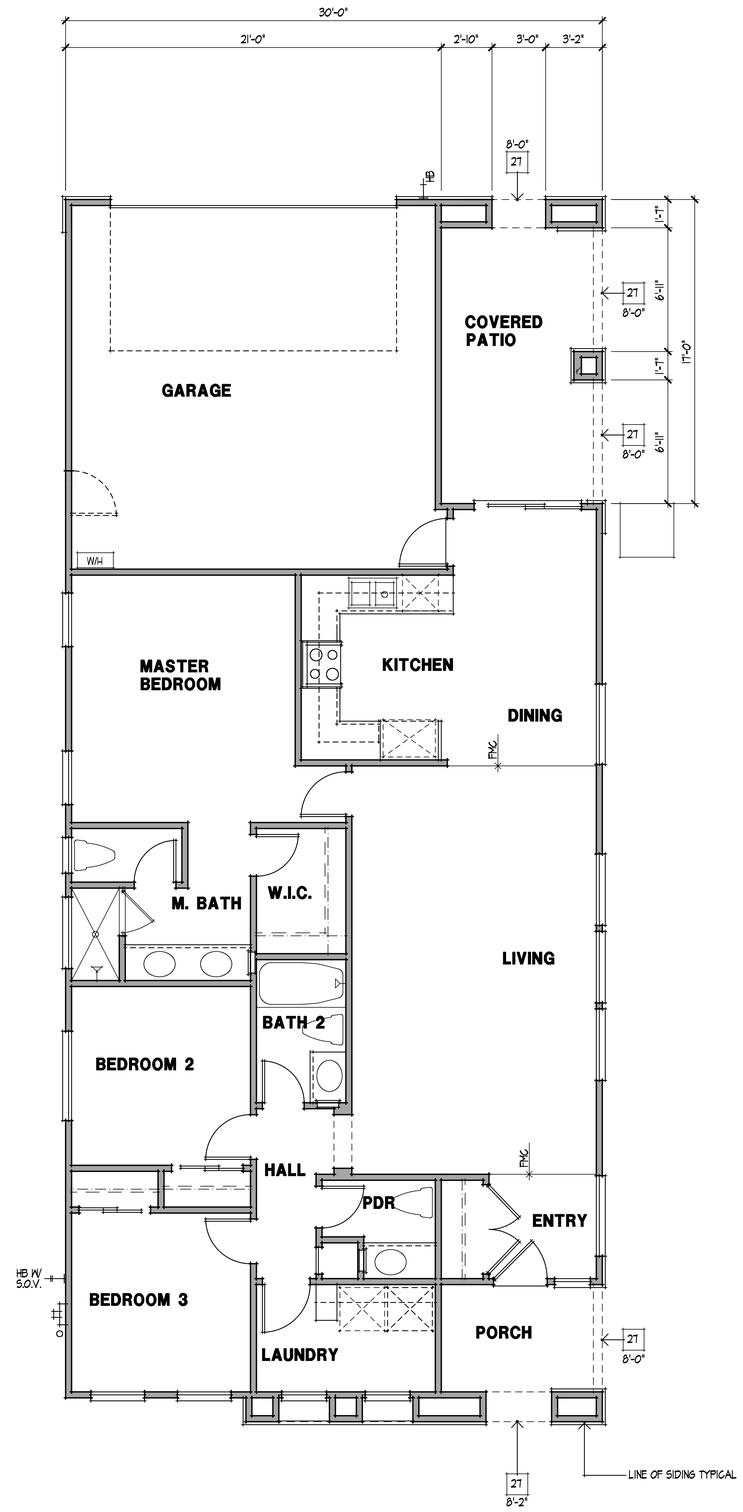

FLOOR PLAN ADDENDUM - C

SCALE: 1/4" = 1'-0"

KPI Inc.

KNITTER PARTNERS INTERNATIONAL, INC.
architecture & planning

1401 DOVE ST. SUITE 240
NEWPORT BEACH, CA 92660
PHONE: (949) 752-1177
FAX: (949) 752-0151
WWW.KNITTER.COM

©KNITTER PARTNERS INTERNATIONAL
ALL RIGHTS RESERVED 2013

THIS DOCUMENT IS THE PROPERTY AND COPYRIGHT OF KNITTER PARTNERS INTERNATIONAL, INC. AND SHALL NOT BE USE ON ANY OTHER WORK, BE REPRODUCED OR DISCLOSED TO OTHERS EXCEPT BY WRITTEN AUTHORIZATION FROM KNITTER PARTNERS INTERNATIONAL, INC.

NO.	DATE	REVISION
△		
△		
△		
△		
△		

IMAGINE DEVELOPMENT L.L.C.

THE COLONY 65
LANCASTER, CALIFORNIA

LICENSED ARCHITECT
MICHAEL J. KNITTER
C10524
REN. 4-30-19
STATE OF CALIFORNIA

PROJECT INFO
PLAN 1

JOB NUMBER **3036**
PROJECT MGR. RC
DRAWN BY AD
PLOT DATE: 3-19-2018

SHEET TITLE
FLOOR PLAN ADDENDA

SHEET NUMBER
1.2.1

PLOT TIME: 12:37 PM PATH\NAME: G:\O_KPI\2013\13036 COLONY 65 PLANS\PLAN 1\3036 11 PLAN 1 ADDENDA.DC5

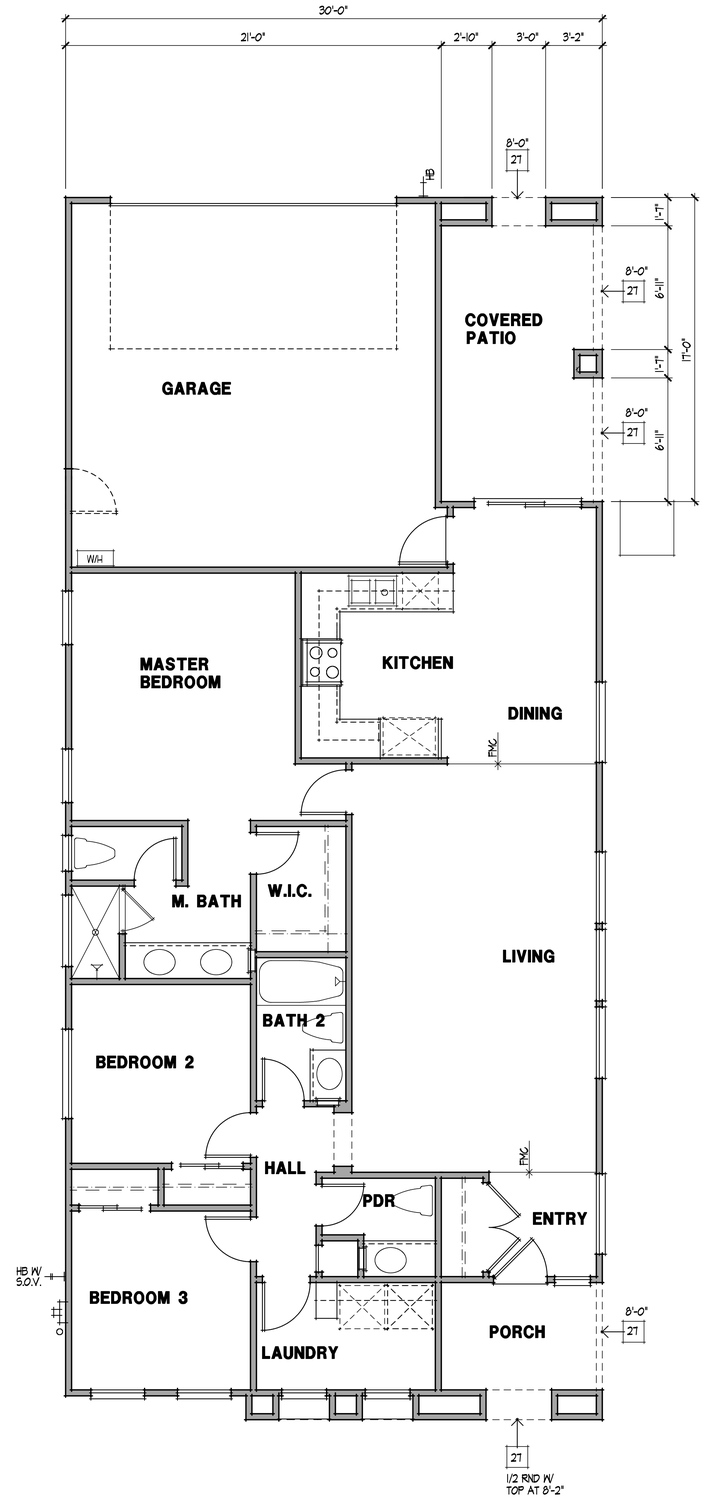

FLOOR PLAN ADDENDUM - D

SCALE: 1/4" = 1'-0"

KPI Inc.
KNITTER PARTNERS INTERNATIONAL, INC.
architecture & planning

1401 DOVE ST. SUITE 240
NEWPORT BEACH, CA 92660
PHONE: (949) 752-1177
FAX: (949) 752-0151
WWW.KNITTER.COM

©KNITTER PARTNERS INTERNATIONAL
ALL RIGHTS RESERVED 2013

THIS DOCUMENT IS THE PROPERTY AND COPYRIGHT OF KNITTER PARTNERS INTERNATIONAL, INC. AND SHALL NOT BE USE ON ANY OTHER WORK, BE REPRODUCED OR DISCLOSED TO OTHERS EXCEPT BY WRITTEN AUTHORIZATION FROM KNITTER PARTNERS INTERNATIONAL, INC.

NO.	DATE	REVISION
△		
△		
△		
△		
△		

IMAGINE DEVELOPMENT L.L.C.

THE COLONY 65
LANCASTER, CALIFORNIA

LICENSED ARCHITECT
MICHAEL J. KNITTER
C10524
REN. 4-30-19
STATE OF CALIFORNIA

PROJECT INFO
PLAN 1

JOB NUMBER **3036**
PROJECT MGR. RC
DRAWN BY AD
PLOT DATE: 3-6-2018

SHEET TITLE
FLOOR PLAN ADDENDUM D

SHEET NUMBER
1.2.2

PLOT TIME: 11:06 AM PATH\NAME: G:\O_KPI\2013\13036 COLONY 65 PLANS\PLAN 1\3036 11 PLAN 1 ADDENDUM D.DC5

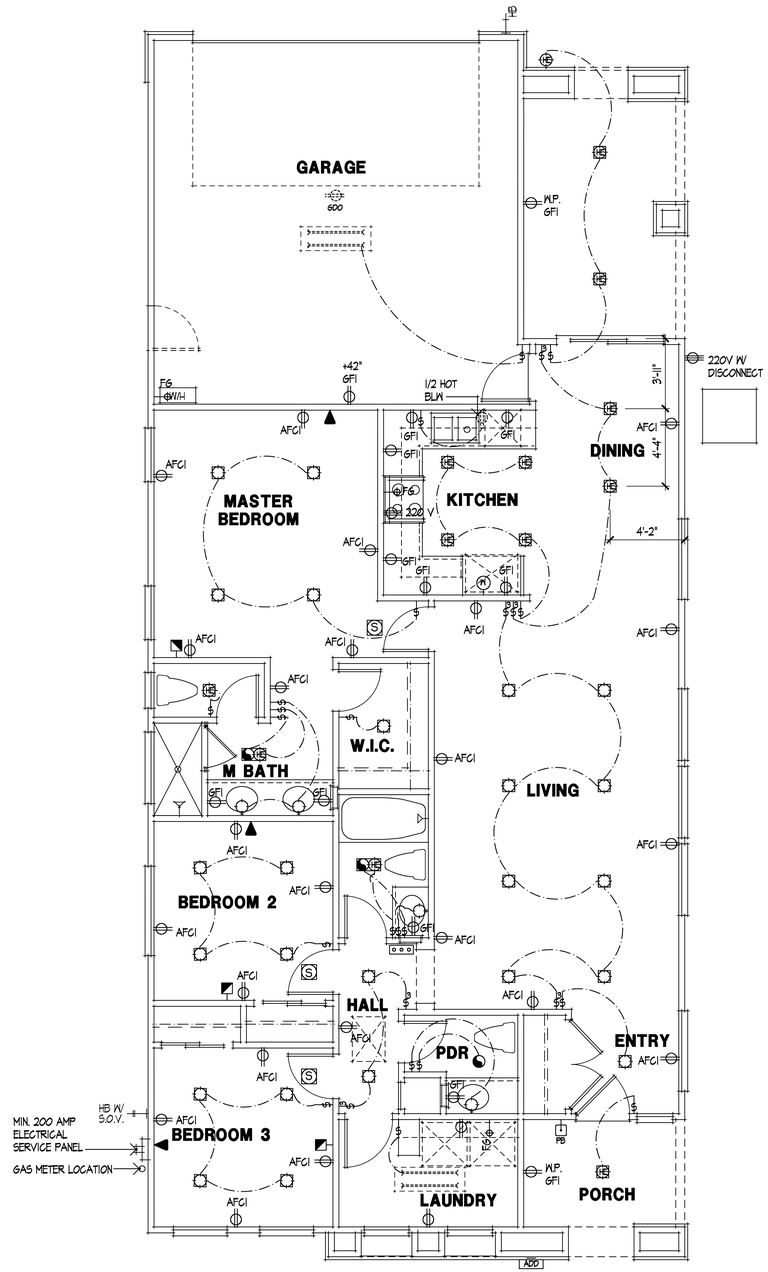

UTILITY PLAN - A

UTILITY SYMBOLS

	110 VOLT OUTLET AT +12" ABOVE FLOOR UNO
AFCI	110 VOLT OUTLET WITH ARC FAULT CIRCUIT INTERRUPTER AT +12" ABOVE FLOOR UNO
	110 VOLT OUTLET, SWITCH CONTROLLED 1/2 HOT
	110 VOLT OUTLET, WITHIN CABINET
220 V	220 VOLT OUTLET
220 V D	220 VOLT OUTLET WITH DISCONNECT
	110 VOLT FLOOR OUTLET WITH COVER
WP. GFI	110 VOLT WATER PROOF OUTLET WITH GFI
	TWO POLE LIGHT SWITCH AT +36" ABOVE FLOOR, +8" ABOVE COUNTER
3	3 WAY LIGHT SWITCH
4	4 WAY LIGHT SWITCH
D	TWO POLE LIGHT SWITCH WITH DIMMER
M	TWO POLE LIGHT SWITCH WITH MOTION SENSOR
PB	DOOR CHIME PUSH BUTTON
	DOOR CHIME
T	THERMOSTAT, VERIFY LOCATION WITH HVAC DRAWING
	TELEPHONE OUTLET
	TELEVISION ANTENNA JACK
	SURFACE MOUNTED INCANDESCENT LIGHT FIXTURE
V.P.	VAPOR PROOF RECESSED INCANDESCENT FIXTURE
	HANGING INCANDESCENT LIGHT FIXTURE
	TRACK LIGHT FIXTURE
	EXHAUST FAN WITH LIGHT
	WALL MOUNTED INCANDESCENT LIGHT FIXTURE
	RECESSED INCANDESCENT LIGHT FIXTURE
	EXHAUST FAN WITH LIGHT, SWITCHED SEPARATELY
J	JUNCTION BOX WITH COVER OR ADAPTOR AS REQUIRED
	SURFACE MOUNTED FLUORESCENT LIGHT FIXTURE
	SURFACE MOUNTED HIGH EFFICACY LIGHT FIXTURE
	WALL MOUNTED HIGH EFFICACY LIGHT FIXTURE
	RECESSED HIGH EFFICACY LIGHT FIXTURE
	RECESSED EXHAUST FAN, SWITCH CONTROLLED
S	SMOKE DETECTOR, ICBO APPROVED, CEILING MOUNTED U.N.O.
SCM	COMBINATION SMOKE/ CARBON MONOXIDE DETECTOR, ICBO APPROVED, CEILING MOUNTED U.N.O.
FG	FUEL GAS OUTLET
	FIREPLACE KEY VALVE (LOOSE)
HB	HOSE BIBB WITH NON-REMOVABLE TYPE BACK FLOW PREVENTION DEVICE
HBV	HOSE BIBB WITH SHUT-OFF VALVE AND NON-REMOVABLE TYPE BACK FLOW PREVENTION DEVICE
	ELECTRONIC SECURITY
	COMPUTER DATA LINE
ADD	ILLUMINATED ADDRESS FIXTURE-VISIBLE FROM STREET
PC	PHOTO CONTROL

ELECTRICAL NOTES

1. LIGHT FIXTURES IN CLOTHES CLOSET SHALL BE PLACED MINIMUM OF 12" AWAY FROM WALLS & MINIMUM OF 12" AWAY FROM CLOTHES PER CEC. ART. 410.8
2. PROVIDE "BROAN-MODEL SSQTXEN110" SMARTSENSE INTELLIGENT VENTILATION SYSTEM IN EACH BATHROOM (0.3 - 0.7 SONES). PROVIDE DEEP DEVICE ELECTRICAL BOXES AND 6" DUCT FOR SYSTEM. (TO COMPLY W ASHRAE 62.2)
3. SMOKE DETECTOR PER CBC SEC. 907.2.
   - SHALL BE INSTALLED ON EACH FLOOR IN ACCORDANCE WITH MFR'S LISTING
   - SHALL BE MOUNTED ON THE CEILING OR WALL AT A CENTRAL POINT OR AREA GIVING ACCESS TO ROOMS USED FOR SLEEPING
   - SHALL BE INSTALLED IN CLOSE PROXIMITY TO THE STAIRS GIVING ACCESS TO ROOMS USED FOR SLEEPING
   - SHALL BE HARD WIRED, INSTALLED WITH A BATTERY BACKUP AND SHALL EMIT A SIGNAL WHEN BATTERY IS LOW
   - SHALL SOUND AN ALARM AUDIBLE IN ALL SLEEPING AREAS WITHIN A UNIT

3A. CARBON MONOXIDE ALARMS PER CRC SECTION R315:
   - SHALL BE INSTALLED OUTSIDE OF EACH SEPARATE DWELLING UNIT SLEEPING AREA IN THE IMMEDIATE VICINITY OF THE BEDROOM(S) AND AT EVERY LEVEL OF A DWELLING UNIT INCLUDING BASEMENT IN ACCORDANCE WITH MANUFACTURERS LISTING
   - SHALL BE INSTALLED IN DWELLING UNITS AND IN SLEEPING UNITS WITH FUEL-BURNING APPLIANCES OR WITH ATTACHED GARAGES.
   - SHALL BE HARD WIRED, INSTALLED WITH A BATTERY BACKUP.
   - TWO OR MORE ALARMS SHALL BE INTERCONNECTED.

4. PROVIDE OUTLET AND LIGHTS IN ATTICS CONTAINING FAU'S
5. PROVIDE CONVENIENCE OUTLET IN EACH BATHROOM, POWDER AND LAUNDRY WITHIN 3 FT. OF BASIN EDGE, CEC ART. 210.52(D). SUCH OUTLETS SHALL BE APPROVED GROUND FAULT CIRCUIT PROTECTED (GFI.) CEC ART. 210.8(A)1. OUTLETS SHALL BE SUPPLIED BY A MINIMUM OF ONE 20-AMPERE BRANCH CIRCUIT. SUCH CIRCUITS SHALL HAVE NO OTHER OUTLETS. THIS CIRCUIT MAY SERVE MORE THAN ONE BATHROOM, CEC ART. 210.11(C)3.
6. PROVIDE AT LEAST ONE 125 VOLT SINGLE PHASE RECEPTACLE IN GARAGE & OUTDOORS, CEC ART. 210.52(G). THIS CIRCUIT SHALL BE GROUND FAULT CIRCUIT PROTECTED (GFI) & WATERPROOF WHEN EXTERIOR, CEC. ART. 210.8(A) 2, 3.
7. ALL KITCHEN 125VOLT SINGLE PHASE 15 & 20 AMP RECEPTACLES SERVING COUNTER TOP SURFACE SHALL BE GROUND FAULT CIRCUIT INTERRUPTED (GFI), CEC ART. 210.8(A) 6.
8. PERMANENTLY INSTALLED LUMINARIES IN KITCHENS SHALL BE HIGH EFFICACY LUMINARIES AND UP TO 50 PERCENT OF THE TOTAL RATED WATTAGES CAN BE NON HIGH EFFICACY LUMINARIES CONTROLLED WITH SEPARATE SWICH, PER ENERGY CODE SEC. 150(K)
9. PROVIDE 100 SQ. IN. OF MAKE UP AIR AT THE LAUNDRY ROOM. (TO REPLACE AIR BEING EXHAUSTED BY DRYER VENT AND EXHAUST FAN IF APPLICABLE), CMC SEC. 504.3.2.
10. FAMILY ROOMS, DINING ROOM, LIVING ROOMS, PARLORS, LIBRARIES, DENS, BEDROOMS, SUNROOMS, RECREATION ROOMS, CLOSETS, HALLWAYS, OR SIMILAR ROOMS OR AREAS, 15 & 20 AMP OUTLETS SHALL BE ARC FAULT CIRCUIT INTERRUPTED, COMBINATION TYPE AFCI REQUIRED PER CEC ART.210.12(B)
11. ALL EXHAUST FANS MUST BE SPECIFIED AT A NOISE RATING OF A MAXIMUM 1 "SONE" (FOR CONTINUOUS USE CALCULATION) OR 3 "SONE" (FOR INTERMITTENT USE CALCULATION)
12. PROVIDE HUMIDISTAT AT ALL FANS LOCATED IN ALL BATHROOMS WITH A BATHTUB, SHOWER OR TUB/SHOWER COMBINATION.

KPI Inc.
KNITTER PARTNERS INTERNATIONAL, INC.
architecture & planning
1401 DOVE ST. SUITE 240
NEWPORT BEACH, CA 92660
PHONE: (949) 752-1177
FAX: (949) 752-0151
WWW.KNITTER.COM
©KNITTER PARTNERS INTERNATIONAL
ALL RIGHTS RESERVED 2013

THIS DOCUMENT IS THE PROPERTY AND COPYRIGHT OF KNITTER PARTNERS INTERNATIONAL, INC. AND SHALL NOT BE USE ON ANY OTHER WORK, BE REPRODUCED OR DISCLOSED TO OTHERS EXCEPT BY WRITTEN AUTHORIZATION FROM KNITTER PARTNERS INTERNATIONAL, INC.

NO.	DATE	REVISION

IMAGINE DEVELOPMENT L.L.C.

THE COLONY 65
LANCASTER, CALIFORNIA

LICENSED ARCHITECT
MICHAEL J. KNITTER
C10524
REN. 4-30-19
STATE OF CALIFORNIA

PROJECT INFO
PLAN 1

JOB NUMBER **3036**
PROJECT MGR. RC
DRAWN BY RC
PLOT DATE: 3-19-2018

SHEET TITLE
UTILITY PLAN

SHEET NUMBER
1.3

PLOT TIME: 12:37 PM PATH\NAME: G:\O_KPI\2013\13036 COLONY 65 PLANS\PLAN 1\3036 10 PLAN 1.DC5

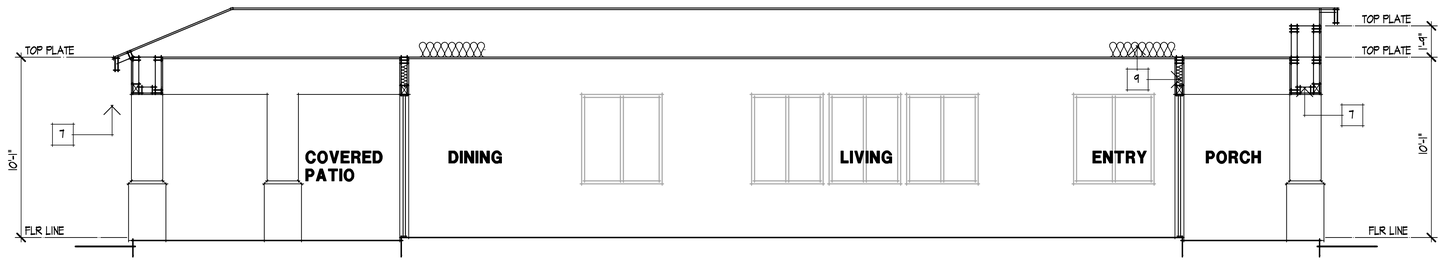

SECTION D

SCALE: 1/4" = 1'-0"

CONCRETE SLAB:
SEE STRUCTURAL DRAWINGS FOR
STRUCTURAL DESIGN

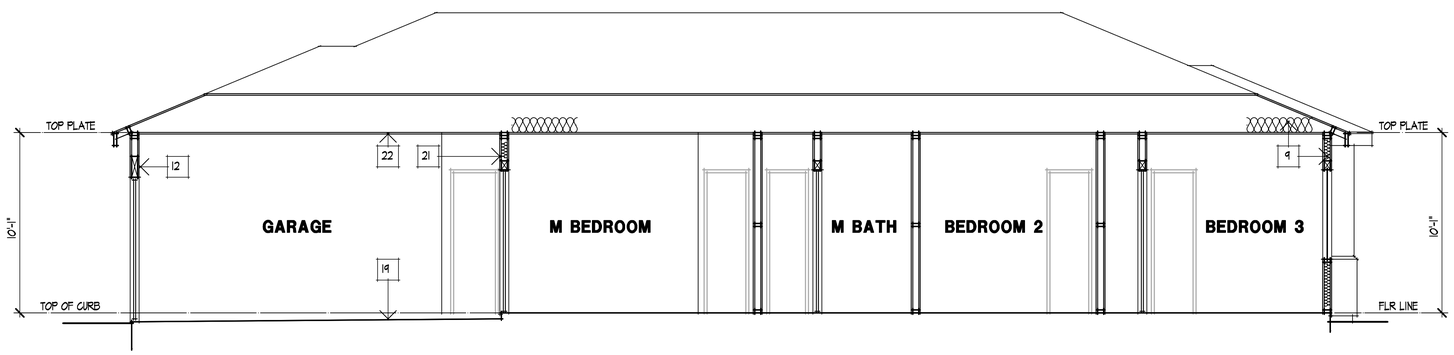

SECTION C

SCALE: 1/4" = 1'-0"

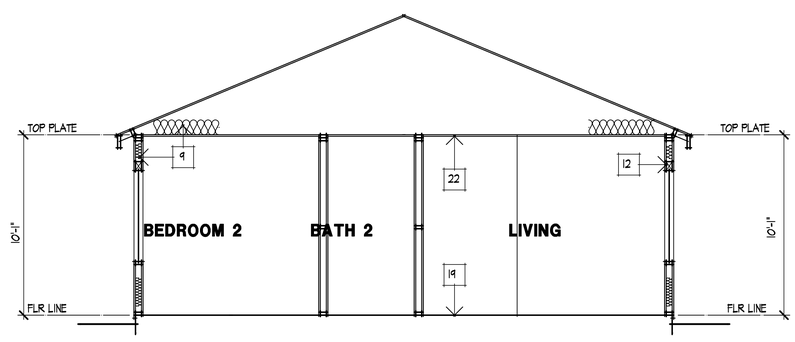

SECTION A

SCALE: 1/4" = 1'-0"

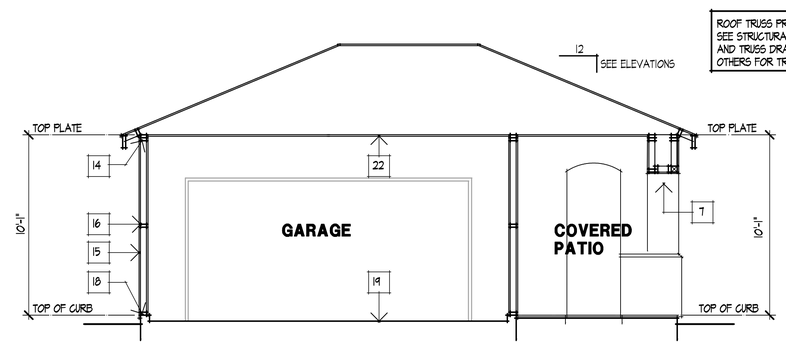

ROOF TRUSS PROFILE ONLY.
SEE STRUCTURAL DRAWINGS
AND TRUSS DRAWINGS BY
OTHERS FOR TRUSS ASSEMBLY.

SECTION B

SCALE: 1/4" = 1'-0"

SECTION NOTES

1. ROOF MATERIAL (REFER TO ROOF NOTES)
2. ROOF SHEATHING (REFER TO FRAMING PLAN)
3. DESIGNED WOOD TRUSS PER MANUFACTURER (REFER TO TRUSS PLANS)
4. 2 X ROOF RAFTERS (REFER TO FRAMING PLAN)
5. FALSE 2X FRAMING AT 24" O.C.
6. EXTERIOR FINISH (REFER TO ELEVATION NOTES)
7. EXTERIOR SOFFIT (REFER TO ELEVATION NOTES)
8. 2 X CEILING JOISTS (REFER TO FRAMING PLAN)
9. INSULATION (REFER TO ENERGY COMPLIANCE SHEET)
10. FLUSH BEAM (REFER TO FRAMING PLAN)
11. DROP BEAM (REFER TO FRAMING PLAN)
12. HEADER (REFER TO FRAMING PLAN)
13. 2 X 4 FRAMING
14. CONTINUOUS DOUBLE 2X TOP PLATE
15. 2 X STUDS AT 16" O.C.
16. 2 X BLOCK AT MID-HEIGHT
17. 2 X CRIPPLE STUD AT 16" O.C.
18. 2 X P.T.D.F. SILL PLATE
19. CONCRETE SLAB (REFER TO STRUCTURAL FOUNDATION PLAN)
20. 1/2" GYPSUM BOARD
21. INTERIOR GARAGE FINSIH REFER TO SHEET GN3.
22. 5/8" GYPSUM BOARD AT MEMBERS SPACED GREATER THAN 24" O/C
23. SHELF (REFER TO FLOOR PLAN FOR HEIGHT)
24. SOFFIT (REFER TO FLOOR PLAN FOR HEIGHT)
25. 2 X SOLE PLATE
26. 2 X FLOOR JOISTS (REFER TO FRAMING PLAN)
27. FLOOR SHEATHING (REFER TO FRAMING PLAN)
28. HANDRAIL (REFER TO DETAIL)
29. GUARDRAIL (REFER TO DETAIL)
30. (3) 2 X 12 STAIR STRINGERS
31. 5/8" MIN. PLYWOOD TREAD AND RISERS
32. 2X "NAILED SPACED" DECKING
33. G.I. FLASHING (ROOF TO WALL)
34. RIP 2X DECK JOISTS FOR 1/4" PER FOOT SLOPE
35. ELASTOMERIC DECKING OVER PLYWOOD SUB FLOOR (INSTALLED TO MANUFACTURER'S SPECIFICATIONS)

KPI Inc.
KNITTER PARTNERS INTERNATIONAL, INC.
architecture & planning
1401 DOVE ST. SUITE 240
NEWPORT BEACH, CA 92660
PHONE: (949) 752-1177
FAX: (949) 752-0151
WWW.KNITTER.COM

©KNITTER PARTNERS INTERNATIONAL
ALL RIGHTS RESERVED 2013

THIS DOCUMENT IS THE PROPERTY AND COPYRIGHT OF KNITTER PARTNERS INTERNATIONAL, INC. AND SHALL NOT BE USE ON ANY OTHER WORK, BE REPRODUCED OR DISCLOSED TO OTHERS EXCEPT BY WRITTEN AUTHORIZATION FROM KNITTER PARTNERS INTERNATIONAL, INC.

NO.	DATE	REVISION
△		
△		
△		
△		
△		

IMAGINE DEVELOPMENT L.L.C.

THE COLONY 65
LANCASTER, CALIFORNIA

LICENSED ARCHITECT
MICHAEL J. KNITTER
C10524
REN. 4-30-19
STATE OF CALIFORNIA

PROJECT INFO
PLAN 1
JOB NUMBER **3036**
PROJECT MGR. RC
DRAWN BY AD
PLOT DATE: 3-6-2018

SHEET TITLE
SECTION A, B, C & D

SHEET NUMBER
1.4

PLOT TIME: 9:16 AM PATH\NAME: G:\O_KPI\2013\13036 COLONY 65 PLANS\PLAN 1\3036 12 SECTION 1.DC5

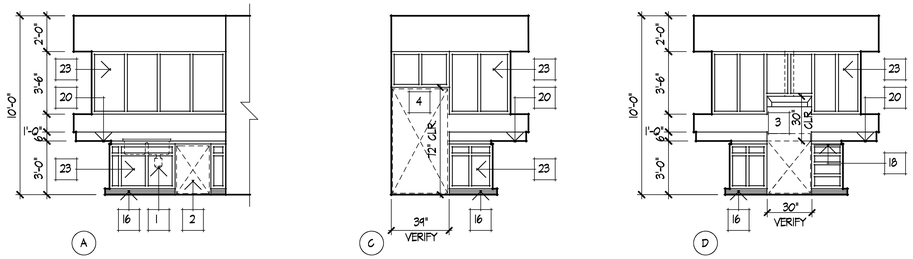

KITCHEN

SCALE: 1/4"= 1'-0"

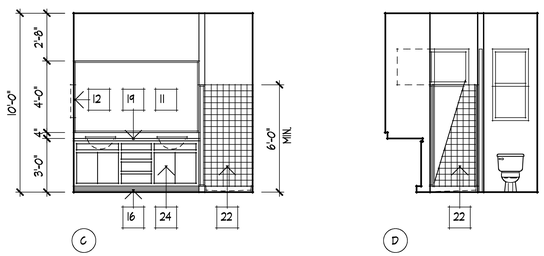

M BATH

SCALE: 1/4"= 1'-0"

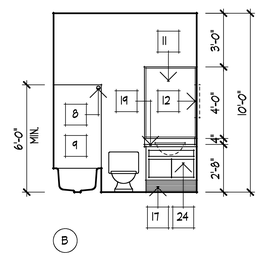

BATH 2

SCALE: 1/4"= 1'-0"

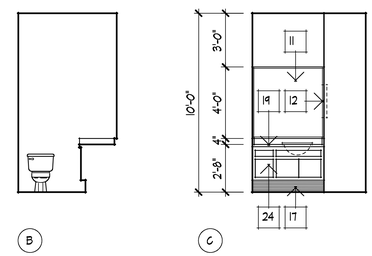

POWDER

SCALE: 1/4"= 1'-0"

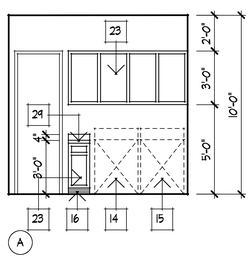

LAUNDRY

SCALE: 1/4"= 1'-0"

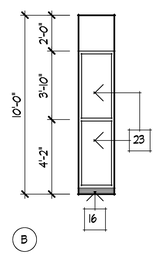

LINEN

SCALE: 1/4"= 1'-0"

INTERIOR NOTES

1. DOUBLE SINK WITH GARBAGE DISPOSAL
2. BUILT-IN DISHWASHER WITH AIR GAP
3. DROP-IN COOK-TOP WITH EXHAUST HOOD AND MICROWAVE ABOVE AND SLIDE-IN CONVENTIONAL OVEN BELOW (VENT TO OUTSIDE AIR, VERIFY DIMENSIONS WITH MANUFACTURER'S SPEC.'S) (MAINTAIN 30" CLEAR ABOVE RANGE OR COOKTOP TO UNPROTECTED NONCOMBUSTIBLES OR 24" CLEAR TO METAL VENTILATING HOOD.
4. PROVIDE 34" REFRIGERATOR SPACE AND PLUMBING RECESSED IN WALL FOR ICE MAKERS
5. 30" WIDE COMBINATION MICROWAVE ABOVE CONVENTIONAL OVEN (VERIFY DIMENSIONS WITH MANUFACTURER SPEC.'S)
6. PANTRY WITH ADJUSTABLE SHELVES
7. BUILT-IN TRASH COMPACTOR
8. SHOWER CURTAIN ROD
9. 32" X 60" TUB WITH SHOWER
10. 42" X 60" OVAL TUB
11. MIRROR
12. RECESSED MEDICINE CABINET
13. TEMPERED SHOWER ENCLOSURE
14. WASHER SPACE
15. DRYER SPACE
16. 4" TOESPACE
17. 8" TOESPACE
18. CUTTING BOARD
19. SYNTHETIC COUNTERTOP AND SPLASH
20. CERAMIC TILE COUNTERTOP AND SPLASH
21. PEDESTAL SINK
22. WAINSCOT TO 72"
23. STAIN GRADE FINISH
24. PAINT GRADE FINISH
25. LAUNDRY SINK
26. DRYWALL SHELF
27. DRYWALL SOFFIT
28. VEGETABLE SINK
29. WOOD TOP

KPI Inc.

KNITTER PARTNERS INTERNATIONAL, INC.
architecture & planning

1401 DOVE ST. SUITE 240
NEWPORT BEACH, CA 92660
PHONE: (949) 752-1177
FAX: (949) 752-0151
WWW.KNITTER.COM

©KNITTER PARTNERS INTERNATIONAL
ALL RIGHTS RESERVED 2013

THIS DOCUMENT IS THE PROPERTY AND COPYRIGHT OF KNITTER PARTNERS INTERNATIONAL, INC. AND SHALL NOT BE USE ON ANY OTHER WORK, BE REPRODUCED OR DISCLOSED TO OTHERS EXCEPT BY WRITTEN AUTHORIZATION FROM KNITTER PARTNERS INTERNATIONAL, INC.

NO.	DATE	REVISION
△		
△		
△		
△		
△		

IMAGINE DEVELOPMENT L.L.C.

THE COLONY 65
LANCASTER, CALIFORNIA

LICENSED ARCHITECT
MICHAEL J. KNITTER
C10524
REN. 4-30-19
STATE OF CALIFORNIA

PROJECT INFO

PLAN 1

JOB NUMBER **3036**
PROJECT MGR. RC
DRAWN BY AD
PLOT DATE: 3-6-2018

SHEET TITLE

INTERIOR ELEVATIONS

SHEET NUMBER

1.5

PLOT TIME: 9:16 AM PATH\NAME: G:\O_KPI\2013\13036 COLONY 65 PLANS\PLAN 1\3036 12 SECTION 1.DC5

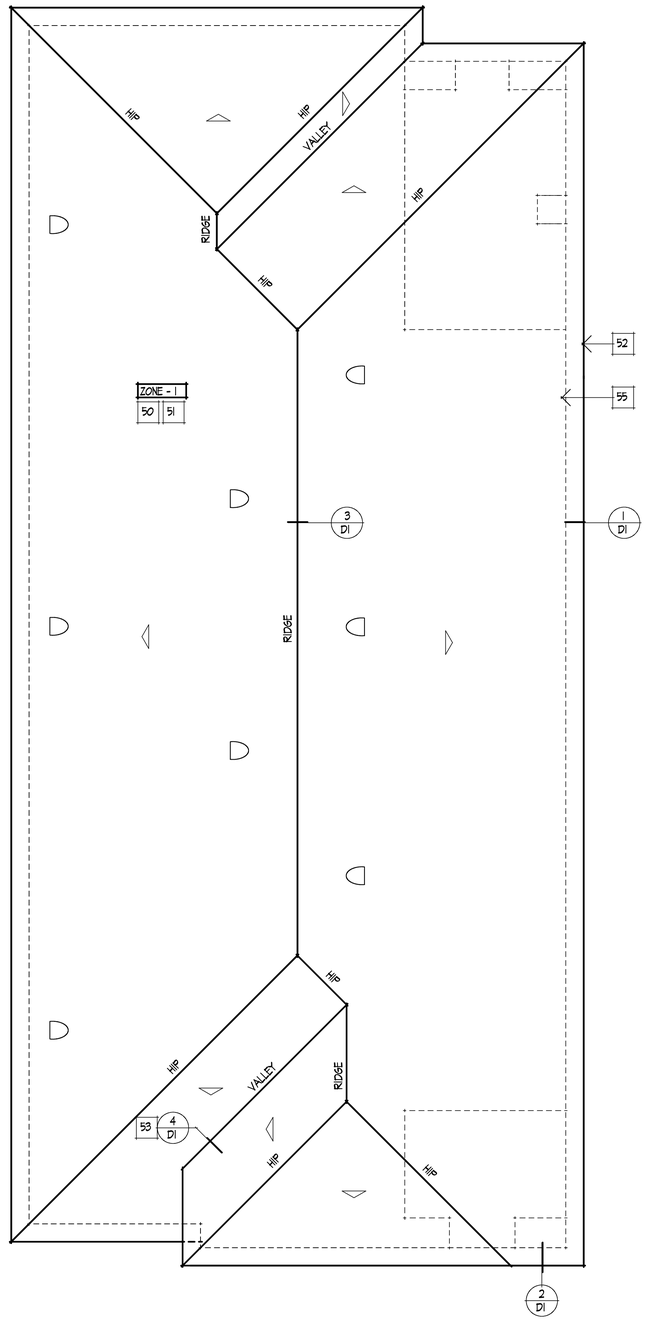

ROOF PLAN - A

SCALE: 1/4" = 1'-0"

ROOF NOTES

50. ROOF SLOPES: 5 : 12
51. ROOF MATERIAL: CONC. 'S' TILE

ROOF COVERING: MFR.: MONIER "LIFETILE" ICBO #2656 OR APPROVED EQUAL. ROOF MATERIAL SHALL BE CLASS 'A' FIRE RETARDENT.

52. ALL EAVES AND RAKES SHALL BE 12" O.H., U.N.O.
53. PROVIDE G.I. VALLEY FLASHING AT ALL ROOF VALLEYS
54. PROVIDE SADDLE AND FLASHING AT CHIMNEY CHASE, TYPICAL
55. LINE OF STRUCTURE

ATTIC VENT CALCULATIONS

THE ATTIC VENTILATION CALCULATIONS PER CRC SECTION R806.2 AS FOLLOWS:

(A) ATTIC AREA (SQUARE FEET).

(B) DIVIDE (A) BY 150 #(300 IF VAPOR RETARDER IS PROVIDED AT WARM SIDE PER CRC, SEC. R806.2) AND MULTIPLY BY 144 TO CALCULATE THE TOTAL REQUIRED NET FREE VENTING AREA IN SQUARE INCHES.
SEE GENERAL NOTE DIVISION 6, SECTION A.

(C) TOTAL SQUARE INCHES OF NET FREE VENTILATING AREA PROVIDED BY GABLE END VENTS.

(D) TOTAL SQUARE INCHES OF NET FREE VENTILATING AREA PROVIDED BY ROOF VENTILATORS.

(E) TOTAL SQUARE INCHES OF NET FREE VENTILATING AREA PROVIDED BY UNDER EAVE VENTS BLOCKING.

PLAN "1A"	A ATTIC AREA	B REQUIRED VENTING	C GABLE END VENTS	D ROOF VENTS	E EAVE VENTS
ZONE-1	2019 FT.²	969 IN.²	0 IN.²	600 HIGH 360 LOW IN.²	130 IN.²
ZONE-2	FT.²	IN.²	IN.²	HIGH LOW IN.²	IN.²
ZONE-3	FT.²	IN.²	IN.²	HIGH LOW IN.²	IN.²
ZONE-4	FT.²	IN.²	IN.²	HIGH LOW IN.²	IN.²

NOTES:

ALL VENT OPENINGS SHALL BE COVERED W/ 1/4" CORROSIVE RESISTANT METAL MESH.

FRAMER SHALL BE RESPONSIBLE FOR COORDINATING W/ TRUSS MFR TO ACCOMMODATE ALL ATTIC VENTS

ALL VENTS SHALL BE INSTALLED SO AS TO MAKE THEM WATER-PROOF AND WALL MOUNTED LOUVERS SHALL BE SEALED AND FLASHED WITH "MOISTOP" IN THE SAME MANNER PRESCRIBED FOR WINDOW INSTALLATION.

PROVIDE APPROVED INSULATION DAMS (BAFFLES) WHERE VENT BLOCKS ARE USED BETWEEN ROOF FRAMING MEMBERS TO PREVENT VENT HOLES BEING BLOCKED BY INSULATION.

ATTIC VENTS

(1) DV24A DORMER VENT PROVIDES 120 SQ. IN. OF FREE FLOW AIR MOVEMENT

(1) L 1424 14" X 24" ATTIC VENT PROVIDES 168 SQ. IN. OF FREE FLOW AIR MOVEMENT

(1) L 1418 14" X 18" ATTIC VENT PROVIDES 126 SQ. IN. OF FREE FLOW AIR MOVEMENT

(1) L 1412 14" X 12" ATTIC VENT PROVIDES 84 SQ. IN. OF FREE FLOW AIR MOVEMENT

(1) L 149 14" X 9" ATTIC VENT PROVIDES 63 SQ. IN. OF FREE FLOW AIR MOVEMENT

(1) O'HAGIN CLOAKED VENT TILE PROVIDES 95 SQ. IN. OF FREE FLOW AIR MOVEMENT

(1) VENT BLOCK PROVIDES 10 SQ. IN. OF FREE FLOW AIR MOVEMENT
(1) VENT BLOCK EVERY THIRD BAY

KPI Inc.
KNITTER PARTNERS INTERNATIONAL, INC.
architecture & planning
1401 DOVE ST. SUITE 240
NEWPORT BEACH, CA 92660
PHONE: (949) 752-1177
FAX: (949) 752-0151
WWW.KNITTER.COM

©KNITTER PARTNERS INTERNATIONAL
ALL RIGHTS RESERVED 2013

THIS DOCUMENT IS THE PROPERTY AND COPYRIGHT OF KNITTER PARTNERS INTERNATIONAL, INC. AND SHALL NOT BE USE ON ANY OTHER WORK, BE REPRODUCED OR DISCLOSED TO OTHERS EXCEPT BY WRITTEN AUTHORIZATION FROM KNITTER PARTNERS INTERNATIONAL, INC.

NO.	DATE	REVISION

IMAGINE DEVELOPMENT L.L.C.

THE COLONY 65
LANCASTER, CALIFORNIA

LICENSED ARCHITECT
MICHAEL J. KNITTER
C10524
REN. 4-30-19
STATE OF CALIFORNIA

PROJECT INFO

PLAN 1

JOB NUMBER **3036**
PROJECT MGR. RC
DRAWN BY RC
PLOT DATE: 3-19-2018

SHEET TITLE

ROOF PLAN A

SHEET NUMBER

1.6

PLOT TIME: 12:37 PM PATH\NAME: G:\0_KPI\2013\13036 COLONY 65 PLANS\PLAN 1\3036 10 PLAN 1.DC5

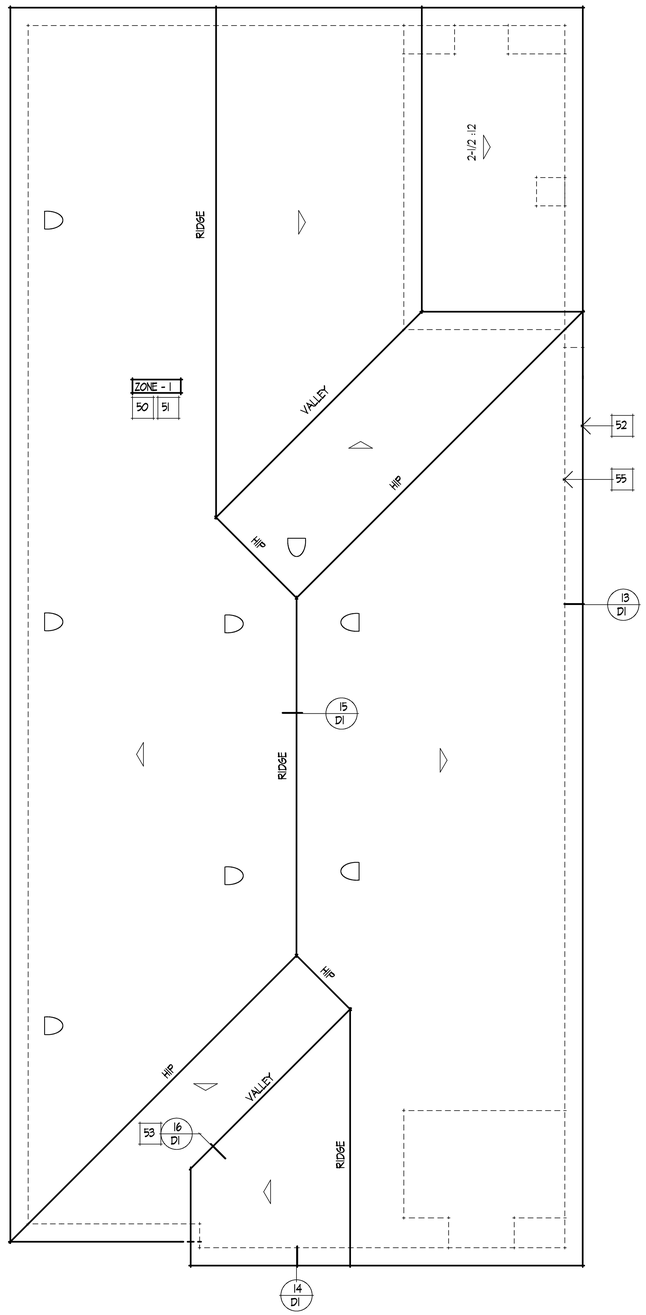

ROOF PLAN - B

SCALE: 1/4" = 1'-0"

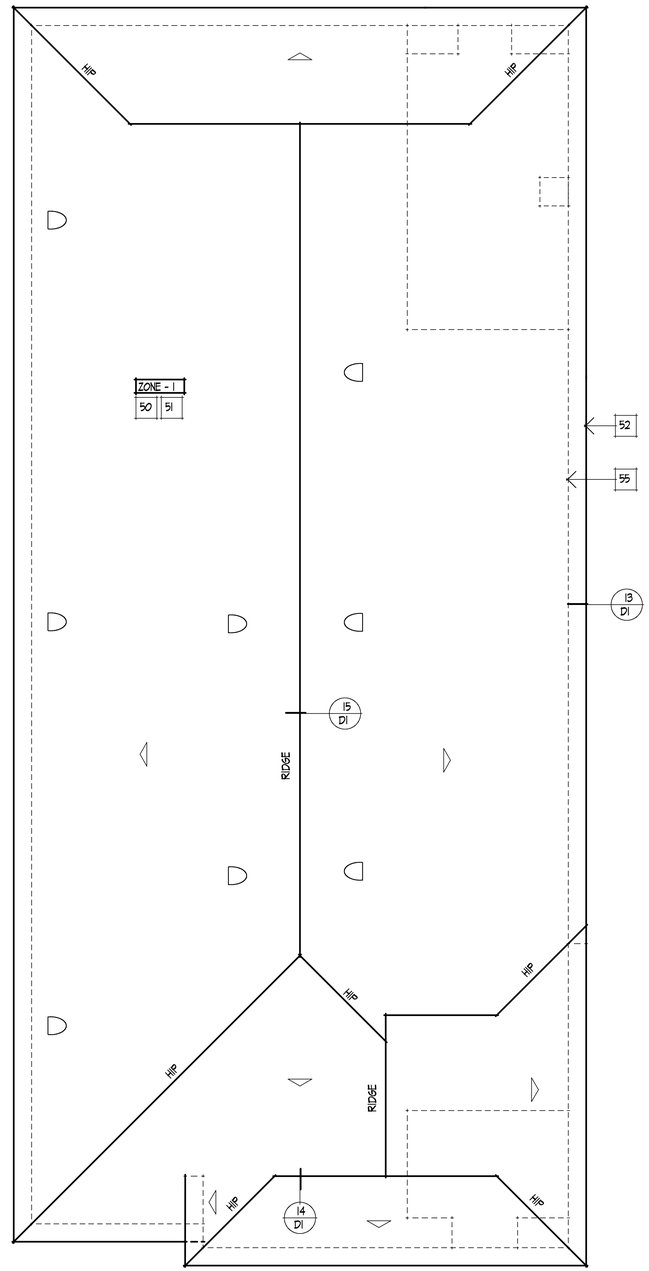

ROOF PLAN - C

SCALE: 1/4" = 1'-0"

ROOF NOTES

50. ROOF SLOPES: 3 : 12 U.N.O.
51. ROOF MATERIAL: CONC. 'FLAT' TILE

ROOF COVERING: MFR.: MONIER "LIFETILE" ICBO #2656 OR APPROVED EQUAL. ROOF MATERIAL SHALL BE CLASS 'A' FIRE RETARDENT.

52. ALL EAVES AND RAKES SHALL BE 12" O.H., U.N.O.
53. PROVIDE G.I. VALLEY FLASHING AT ALL ROOF VALLEYS
54. PROVIDE SADDLE AND FLASHING AT CHIMNEY CHASE, TYPICAL
55. LINE OF STRUCTURE

ATTIC VENT CALCULATIONS

THE ATTIC VENTILATION CALCULATIONS PER CRC SECTION R806.2 AS FOLLOWS:

(A) ATTIC AREA (SQUARE FEET).

(B) DIVIDE (A) BY 150 *(300 IF VAPOR RETARDER IS PROVIDED AT WARM SIDE PER. CRC, SEC. R806.2) AND MULTIPLY BY 144 TO CALCULATE THE TOTAL REQUIRED NET FREE VENTING AREA IN SQUARE INCHES.
SEE GENERAL NOTE DIVISION 6, SECTION A.

(C) TOTAL SQUARE INCHES OF NET FREE VENTILATING AREA PROVIDED BY GABLE END VENTS.

(D) TOTAL SQUARE INCHES OF NET FREE VENTILATING AREA PROVIDED BY ROOF VENTILATORS.

(E) TOTAL SQUARE INCHES OF NET FREE VENTILATING AREA PROVIDED BY UNDER EAVE VENTS BLOCKING.

PLAN "1B" & "1C"	A ATTIC AREA	B REQUIRED VENTING	C GABLE END VENTS	D ROOF VENTS	E EAVE VENTS
ZONE-1	2019 FT.²	969 IN.²	0 IN.²	600 HIGH 360 LOW IN.²	130 IN.²
ZONE-2	FT.²	IN.²	IN.²	HIGH LOW IN.²	IN.²
ZONE-3	FT.²	IN.²	IN.²	HIGH LOW IN.²	IN.²
ZONE-4	FT.²	IN.²	IN.²	HIGH LOW IN.²	IN.²

NOTES:

ALL VENT OPENINGS SHALL BE COVERED W/ 1/4" CORROSIVE RESISTANT METAL MESH.

FRAMER SHALL BE RESPONSIBLE FOR COORDINATING W/ TRUSS MFR TO ACCOMMODATE ALL ATTIC VENTS

ALL VENTS SHALL BE INSTALLED SO AS TO MAKE THEM WATER-PROOF AND WALL MOUNTED. LOUVERS SHALL BE SEALED AND FLASHED WITH "MOISTOP" IN THE SAME MANNER PRESCRIBED FOR WINDOW INSTALLATION.

PROVIDE APPROVED INSULATION DAMS (BAFFLES) WHERE VENT BLOCKS ARE USED BETWEEN ROOF FRAMING MEMBERS TO PREVENT VENT HOLES BEING BLOCKED BY INSULATION.

ATTIC VENTS

(1) DV24A DORMER VENT PROVIDES 120 SQ. IN. OF FREE FLOW AIR MOVEMENT

(1) L 1424 14" X 24" ATTIC VENT PROVIDES 168 SQ. IN. OF FREE FLOW AIR MOVEMENT

(1) L 1418 14" X 18" ATTIC VENT PROVIDES 126 SQ. IN. OF FREE FLOW AIR MOVEMENT

(1) L 1412 14" X 12" ATTIC VENT PROVIDES 84 SQ. IN. OF FREE FLOW AIR MOVEMENT

(1) L 149 14" X 9" ATTIC VENT PROVIDES 63 SQ. IN. OF FREE FLOW AIR MOVEMENT

(1) O'HAGIN CLOAKED VENT TILE PROVIDES 95 SQ. IN. OF FREE FLOW AIR MOVEMENT

(1) VENT BLOCK PROVIDES 10 SQ. IN. OF FREE FLOW AIR MOVEMENT
(1) VENT BLOCK EVERY THIRD BAY

KPI Inc.
KNITTER PARTNERS INTERNATIONAL, INC.
architecture & planning

1401 DOVE ST. SUITE 240
NEWPORT BEACH, CA 92660
PHONE: (949) 752-1177
FAX: (949) 752-0151
WWW.KNITTER.COM

©KNITTER PARTNERS INTERNATIONAL
ALL RIGHTS RESERVED 2013

THIS DOCUMENT IS THE PROPERTY AND COPYRIGHT OF KNITTER PARTNERS INTERNATIONAL, INC. AND SHALL NOT BE USE ON ANY OTHER WORK, BE REPRODUCED OR DISCLOSED TO OTHERS EXCEPT BY WRITTEN AUTHORIZATION FROM KNITTER PARTNERS INTERNATIONAL, INC.

NO.	DATE	REVISION

IMAGINE DEVELOPMENT L.L.C.

THE COLONY 65
LANCASTER, CALIFORNIA

LICENSED ARCHITECT
MICHAEL J. KNITTER
C10524
REN. 4-30-19
STATE OF CALIFORNIA

PROJECT INFO
PLAN 1

JOB NUMBER **3036**
PROJECT MGR. RC
DRAWN BY AD
PLOT DATE: 3-19-2018

SHEET TITLE
ROOF PLAN B & C

SHEET NUMBER
1.6.1

PLOT TIME: 12:37 PM PATH\NAME: G:\O_KPI\2013\13036 COLONY 65 PLANS\PLAN 1\3036 11 PLAN 1 ADDENDA.DC5

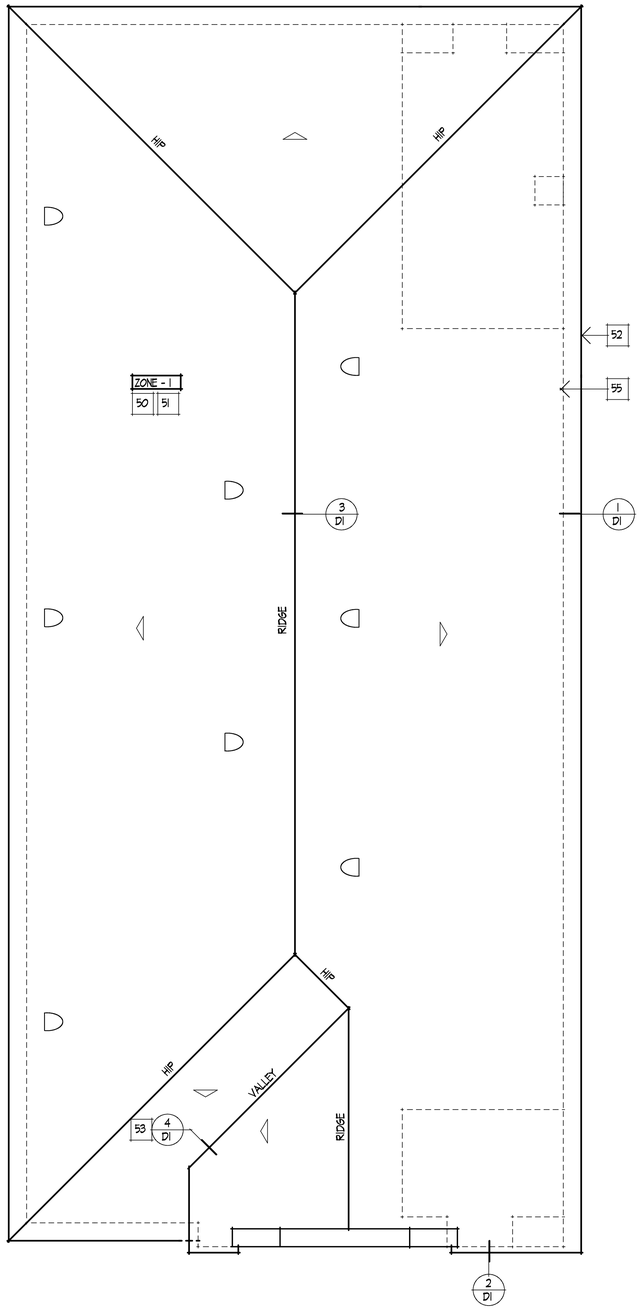

ROOF PLAN - D

SCALE: 1/4" = 1'-0"

ROOF NOTES

50. ROOF SLOPES: 3 : 12
51. ROOF MATERIAL: CONC. 'S' TILE

ROOF COVERING: MFR.: MONIER "LIFETILE" ICBO #2656 OR APPROVED EQUAL. ROOF MATERIAL SHALL BE CLASS 'A' FIRE RETARDENT.

52. ALL EAVES AND RAKES SHALL BE 12" O.H., U.N.O.
53. PROVIDE G.I. VALLEY FLASHING AT ALL ROOF VALLEYS
54. PROVIDE SADDLE AND FLASHING AT CHIMNEY CHASE, TYPICAL
55. LINE OF STRUCTURE

ATTIC VENT CALCULATIONS

THE ATTIC VENTILATION CALCULATIONS PER CRC SECTION R806.2 AS FOLLOWS:

(A) ATTIC AREA (SQUARE FEET).

(B) DIVIDE (A) BY 150 *(300 IF VAPOR RETARDER IS PROVIDED AT WARM SIDE PER. CRC, SEC. R806.2) AND MULTIPLY BY 144 TO CALCULATE THE TOTAL REQUIRED NET FREE VENTING AREA IN SQUARE INCHES.
SEE GENERAL NOTE DIVISION 6, SECTION A.

(C) TOTAL SQUARE INCHES OF NET FREE VENTILATING AREA PROVIDED BY GABLE END VENTS.

(D) TOTAL SQUARE INCHES OF NET FREE VENTILATING AREA PROVIDED BY ROOF VENTILATORS.

(E) TOTAL SQUARE INCHES OF NET FREE VENTILATING AREA PROVIDED BY UNDER EAVE VENTS BLOCKING.

PLAN "ID"	A ATTIC AREA	B REQUIRED VENTING	C GABLE END VENTS	D ROOF VENTS	E EAVE VENTS
ZONE-1	2019 FT.²	969 IN.²	0 IN.²	600 HIGH 360 LOW IN.²	130 IN.²
ZONE-2	FT.²	IN.²	IN.²	HIGH LOW IN.²	IN.²
ZONE-3	FT.²	IN.²	IN.²	HIGH LOW IN.²	IN.²
ZONE-4	FT.²	IN.²	IN.²	HIGH LOW IN.²	IN.²

NOTES:
ALL VENT OPENINGS SHALL BE COVERED W/ 1/4" CORROSIVE RESISTANT METAL MESH.

FRAMER SHALL BE RESPONSIBLE FOR COORDINATING W/ TRUSS MFR TO ACCOMMODATE ALL ATTIC VENTS

ALL VENTS SHALL BE INSTALLED SO AS TO MAKE THEM WATER-PROOF AND WALL MOUNTED. LOUVERS SHALL BE SEALED AND FLASHED WITH "MOISTOP" IN THE SAME MANNER PRESCRIBED FOR WINDOW INSTALLATION.

PROVIDE APPROVED INSULATION DAMS (BAFFLES) WHERE VENT BLOCKS ARE USED BETWEEN ROOF FRAMING MEMBERS TO PREVENT VENT HOLES BEING BLOCKED BY INSULATION.

ATTIC VENTS

(1) DV24A DORMER VENT PROVIDES 120 SQ. IN. OF FREE FLOW AIR MOVEMENT

(1) L 1424 14" X 24" ATTIC VENT PROVIDES 168 SQ. IN. OF FREE FLOW AIR MOVEMENT

(1) L 1418 14" X 18" ATTIC VENT PROVIDES 126 SQ. IN. OF FREE FLOW AIR MOVEMENT

(1) L 1412 14" X 12" ATTIC VENT PROVIDES 84 SQ. IN. OF FREE FLOW AIR MOVEMENT

(1) L 149 14" X 9" ATTIC VENT PROVIDES 63 SQ. IN. OF FREE FLOW AIR MOVEMENT

(1) O'HAGIN CLOAKED VENT TILE PROVIDES 95 SQ. IN. OF FREE FLOW AIR MOVEMENT

(1) VENT BLOCK PROVIDES 10 SQ. IN. OF FREE FLOW AIR MOVEMENT
(1) VENT BLOCK EVERY THIRD BAY

KPI Inc.
KNITTER PARTNERS INTERNATIONAL, INC.
architecture & planning

1401 DOVE ST. SUITE 240
NEWPORT BEACH, CA 92660
PHONE: (949) 752-1177
FAX: (949) 752-0151
WWW.KNITTER.COM

©KNITTER PARTNERS INTERNATIONAL
ALL RIGHTS RESERVED 2013

THIS DOCUMENT IS THE PROPERTY AND COPYRIGHT OF KNITTER PARTNERS INTERNATIONAL, INC. AND SHALL NOT BE USE ON ANY OTHER WORK, BE REPRODUCED OR DISCLOSED TO OTHERS EXCEPT BY WRITTEN AUTHORIZATION FROM KNITTER PARTNERS INTERNATIONAL, INC.

NO.	DATE	REVISION

IMAGINE DEVELOPMENT L.L.C.

THE COLONY 65
LANCASTER, CALIFORNIA

LICENSED ARCHITECT
MICHAEL J. KNITTER
C10524
REN. 4-30-19
STATE OF CALIFORNIA

PROJECT INFO
PLAN 1

JOB NUMBER **3036**
PROJECT MGR. RC
DRAWN BY AD
PLOT DATE: 3-6-2018

SHEET TITLE
ROOF PLAN D

SHEET NUMBER
1.6.2

PLOT TIME: 11:06 AM PATH\NAME: G:\O_KPI\2013\13036 COLONY 65 PLANS\PLAN 1\3036 11 PLAN 1 ADDENDUM D.DC5

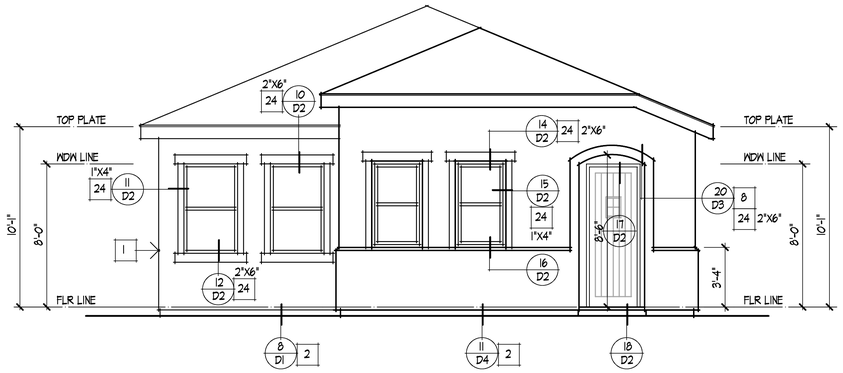

FRONT A

SCALE: 1/4" = 1'-0"

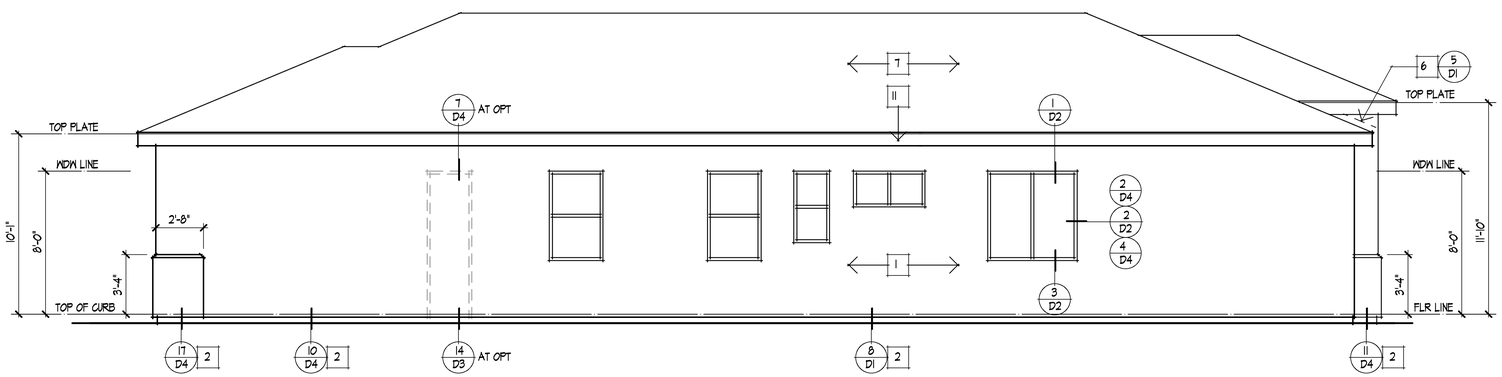

LEFT A

SCALE: 1/4" = 1'-0"

ELEVATION NOTES

1. 7/8" STUCCO (REFER TO GENERAL NOTES)
2. CONTINUOUS G.I. STUCCO SCREED (REFER TO DETAIL)
3. APPROVED SPARK ARRESTER BY FIREPLACE MFR.
4. G.I. SADDLE AND FLASHING
5. G.I. CHIMNEY CAP BY FIREPLACE MFR.
6. G.I. FLASHING
7. ROOF MATERIAL (REFER TO ROOF NOTES)
8. STUCCO SOFFIT O/ METAL LATH O/ BUILDING PAPER
9. ATTIC VENT (REFER TO ATTIC VENT CALCS)
10. 3X6 RAFTER TAILS
11. RE/S FASCIA OR BARGE BOARD. SEE ELEVATIONS FOR SIZE.
12. RE/S TRIM. SEE ELEVATIONS FOR SIZE.
13. STUCCO OVER 2X TRIM
14. POT SHELF (REFER TO DETAIL)
15. LINE OF CEILING
16. LINE OF SHELF
17. LINE OF ROOF ABOVE
18. DECORATIVE FOAM PIPE
19. TYPICAL EXTERIOR SIDING
20. DECORATIVE TILE
21. WOOD SHUTTERS (NON ACTIVE)
22. WOOD CORBEL
23. STUCCO RECESS
24. FINISH COAT OVER FOAM TRIM. (REFER TO DETAIL)
25. ELDORADO STONE (ER-602) OR APPROVED EQUAL
26. WOOD OUTLOOKER
27. SECTIONAL GARAGE DOOR
28. WOOD RAIL OR W.I. RAIL (REFER TO DETAIL)
29. EXTERIOR GRADE PLYWOOD SOFFIT
30. 14" X 18" G.I. SCREENED AND LOUVERED COMBUSTION AIR VENT

KPI Inc.
KNITTER PARTNERS INTERNATIONAL, INC.
architecture & planning
1401 DOVE ST. SUITE 240
NEWPORT BEACH, CA 92660
PHONE: (949) 752-1177
FAX: (949) 752-0151
WWW.KNITTER.COM

©KNITTER PARTNERS INTERNATIONAL
ALL RIGHTS RESERVED 2013

THIS DOCUMENT IS THE PROPERTY AND COPYRIGHT OF KNITTER PARTNERS INTERNATIONAL, INC. AND SHALL NOT BE USE ON ANY OTHER WORK, BE REPRODUCED OR DISCLOSED TO OTHERS EXCEPT BY WRITTEN AUTHORIZATION FROM KNITTER PARTNERS INTERNATIONAL, INC.

NO.	DATE	REVISION
△		
△		
△		
△		
△		

IMAGINE DEVELOPMENT L.L.C.

THE COLONY 65
LANCASTER, CALIFORNIA

LICENSED ARCHITECT
MICHAEL J. KNITTER
C10524
REN. 4-30-19
STATE OF CALIFORNIA

PROJECT INFO
PLAN 1

JOB NUMBER **3036**
PROJECT MGR. RC
DRAWN BY AD
PLOT DATE: 3-6-2018

SHEET TITLE
ELEVATION 'A' FRONT & LEFT ELEVATION

SHEET NUMBER
1.7

PLOT TIME: 11:02 AM PATH\NAME: G:\0_KPI\2013\13036 COLONY 65 PLANS\PLAN 1\3036 13 ELEVATION 1.DC5

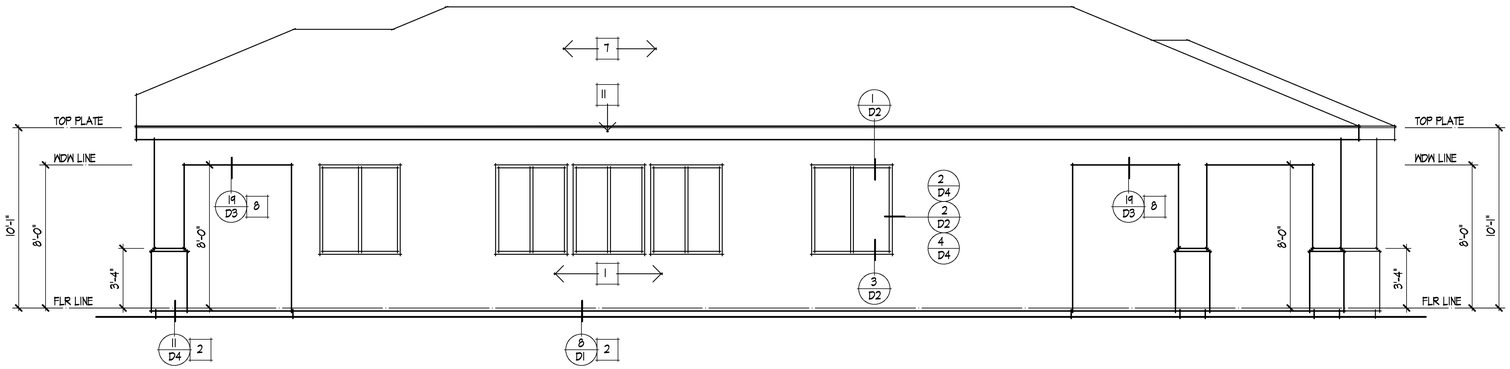

RIGHT A

SCALE: 1/4" = 1'-0"

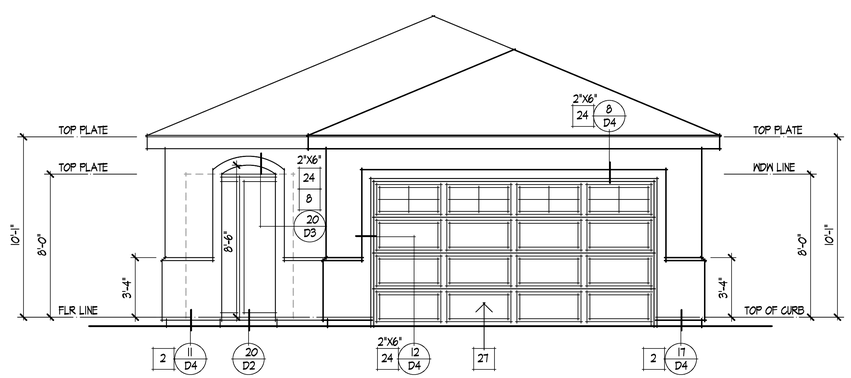

REAR A

SCALE: 1/4" = 1'-0"

ELEVATION NOTES

1. 7/8" STUCCO (REFER TO GENERAL NOTES)
2. CONTINUOUS G.I. STUCCO SCREED (REFER TO DETAIL)
3. APPROVED SPARK ARRESTER BY FIREPLACE MFR.
4. G.I. SADDLE AND FLASHING
5. G.I. CHIMNEY CAP BY FIREPLACE MFR.
6. G.I. FLASHING
7. ROOF MATERIAL (REFER TO ROOF NOTES)
8. STUCCO SOFFIT O/ METAL LATH O/ BUILDING PAPER
9. ATTIC VENT (REFER TO ATTIC VENT CALCS)
10. 3X6 RAFTER TAILS
11. RE/S FASCIA OR BARGE BOARD. SEE ELEVATIONS FOR SIZE.
12. RE/S TRIM. SEE ELEVATIONS FOR SIZE.
13. STUCCO OVER 2X TRIM
14. POT SHELF (REFER TO DETAIL)
15. LINE OF CEILING
16. LINE OF SHELF
17. LINE OF ROOF ABOVE
18. DECORATIVE FOAM PIPE
19. TYPICAL EXTERIOR SIDING
20. DECORATIVE TILE
21. WOOD SHUTTERS (NON ACTIVE)
22. WOOD CORBEL
23. STUCCO RECESS
24. FINISH COAT OVER FOAM TRIM. (REFER TO DETAIL)
25. ELDORADO STONE (ER-602) OR APPROVED EQUAL
26. WOOD OUTLOOKER
27. SECTIONAL GARAGE DOOR
28. WOOD RAIL OR W.I. RAIL (REFER TO DETAIL)
29. EXTERIOR GRADE PLYWOOD SOFFIT
30. 14" X 18" G.I. SCREENED AND LOUVERED COMBUSTION AIR VENT

KPI Inc.
KNITTER PARTNERS INTERNATIONAL, INC.
architecture & planning
1401 DOVE ST. SUITE 240
NEWPORT BEACH, CA 92660
PHONE: (949) 752-1177
FAX: (949) 752-0151
WWW.KNITTER.COM

©KNITTER PARTNERS INTERNATIONAL
ALL RIGHTS RESERVED 2013

THIS DOCUMENT IS THE PROPERTY AND COPYRIGHT OF KNITTER PARTNERS INTERNATIONAL, INC. AND SHALL NOT BE USE ON ANY OTHER WORK, BE REPRODUCED OR DISCLOSED TO OTHERS EXCEPT BY WRITTEN AUTHORIZATION FROM KNITTER PARTNERS INTERNATIONAL, INC.

NO.	DATE	REVISION
△		
△		
△		
△		
△		

IMAGINE DEVELOPMENT L.L.C.

THE COLONY 65
LANCASTER, CALIFORNIA

LICENSED ARCHITECT
MICHAEL J. KNITTER
C10524
REN. 4-30-19
STATE OF CALIFORNIA

PROJECT INFO
PLAN 1

JOB NUMBER **3036**
PROJECT MGR. RC
DRAWN BY AD
PLOT DATE: 3-6-2018

SHEET TITLE
ELEVATION 'A' RIGHT & REAR ELEVATIONS

SHEET NUMBER
1.8

PLOT TIME: 11:02 AM PATH\NAME: G:\0_KPI\2013\13036 COLONY 65 PLANS\PLAN 1\3036 13 ELEVATION 1.DC5

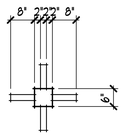

A DECORATIVE TILE
SCALE: 1/2" = 1'-0"

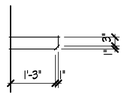

B WOOD OUTLOOKER
SCALE: 1/2" = 1'-0"

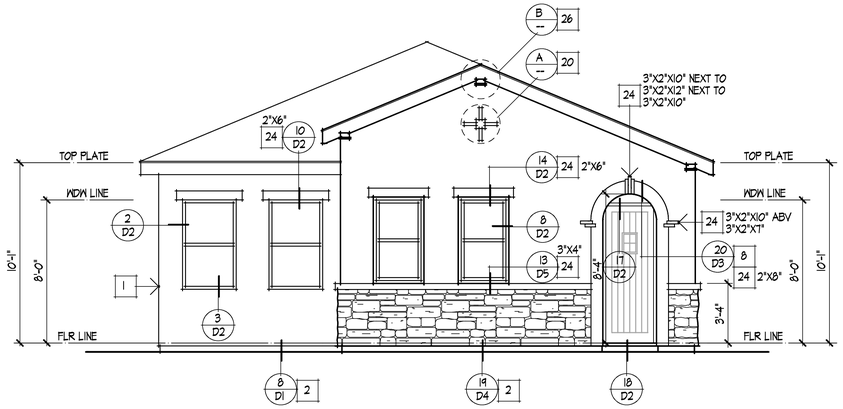

FRONT B

SCALE: 1/4" = 1'-0"

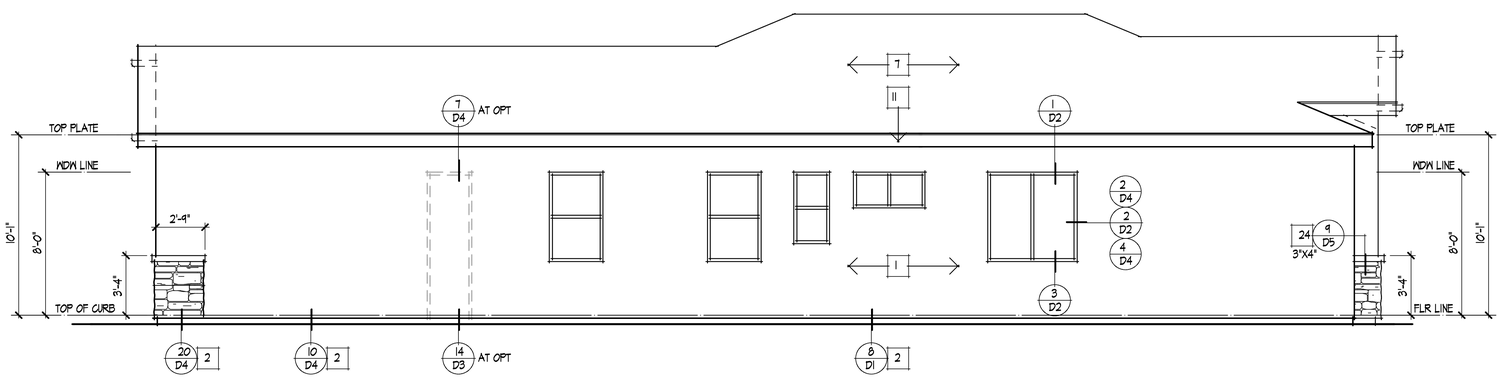

LEFT B

SCALE: 1/4" = 1'-0"

SEE SHEET 1.2.1 FOR ADDENDA INFORMATION PER ELEVATION.

ELEVATION NOTES

1. 7/8" STUCCO (REFER TO GENERAL NOTES)
2. CONTINUOUS G.I. STUCCO SCREED (REFER TO DETAIL)
3. APPROVED SPARK ARRESTER BY FIREPLACE MFR.
4. G.I. SADDLE AND FLASHING
5. G.I. CHIMNEY CAP BY FIREPLACE MFR.
6. G.I. FLASHING
7. ROOF MATERIAL (REFER TO ROOF NOTES)
8. STUCCO SOFFIT O/ METAL LATH O/ BUILDING PAPER
9. ATTIC VENT (REFER TO ATTIC VENT CALCS)
10. 3X6 RAFTER TAILS
11. RE/S FASCIA OR BARGE BOARD. SEE ELEVATIONS FOR SIZE.
12. RE/S TRIM. SEE ELEVATIONS FOR SIZE.
13. STUCCO OVER 2X TRIM
14. POT SHELF (REFER TO DETAIL)
15. LINE OF CEILING
16. LINE OF SHELF
17. LINE OF ROOF ABOVE
18. DECORATIVE FOAM PIPE
19. TYPICAL EXTERIOR SIDING
20. DECORATIVE TILE
21. WOOD SHUTTERS (NON ACTIVE)
22. WOOD CORBEL
23. STUCCO RECESS
24. FINISH COAT OVER FOAM TRIM. (REFER TO DETAIL)
25. ELDORADO STONE (ER-602) OR APPROVED EQUAL
26. WOOD OUTLOOKER
27. SECTIONAL GARAGE DOOR
28. WOOD RAIL OR W.I. RAIL (REFER TO DETAIL)
29. EXTERIOR GRADE PLYWOOD SOFFIT
30. 14" X 18" G.I. SCREENED AND LOUVERED COMBUSTION AIR VENT

KPI Inc.
KNITTER PARTNERS INTERNATIONAL, INC.
architecture & planning
1401 DOVE ST. SUITE 240
NEWPORT BEACH, CA 92660
PHONE: (949) 752-1177
FAX: (949) 752-0151
WWW.KNITTER.COM

©KNITTER PARTNERS INTERNATIONAL
ALL RIGHTS RESERVED 2013

THIS DOCUMENT IS THE PROPERTY AND COPYRIGHT OF KNITTER PARTNERS INTERNATIONAL, INC. AND SHALL NOT BE USE ON ANY OTHER WORK, BE REPRODUCED OR DISCLOSED TO OTHERS EXCEPT BY WRITTEN AUTHORIZATION FROM KNITTER PARTNERS INTERNATIONAL, INC.

NO.	DATE	REVISION
△		
△		
△		
△		
△		

IMAGINE DEVELOPMENT L.L.C.

THE COLONY 65
LANCASTER, CALIFORNIA

LICENSED ARCHITECT
MICHAEL J. KNITTER
C10524
REN. 4-30-19
STATE OF CALIFORNIA

PROJECT INFO
PLAN 1

JOB NUMBER **3036**
PROJECT MGR. RC
DRAWN BY AD
PLOT DATE: 3-6-2018

SHEET TITLE
ELEVATION 'B' FRONT & LEFT ELEVATION

SHEET NUMBER
1.9

PLOT TIME: 11:02 AM PATH\NAME: G:\0_KPI\2013\13036 COLONY 65 PLANS\PLAN 1\3036 13 ELEVATION 1.DC5

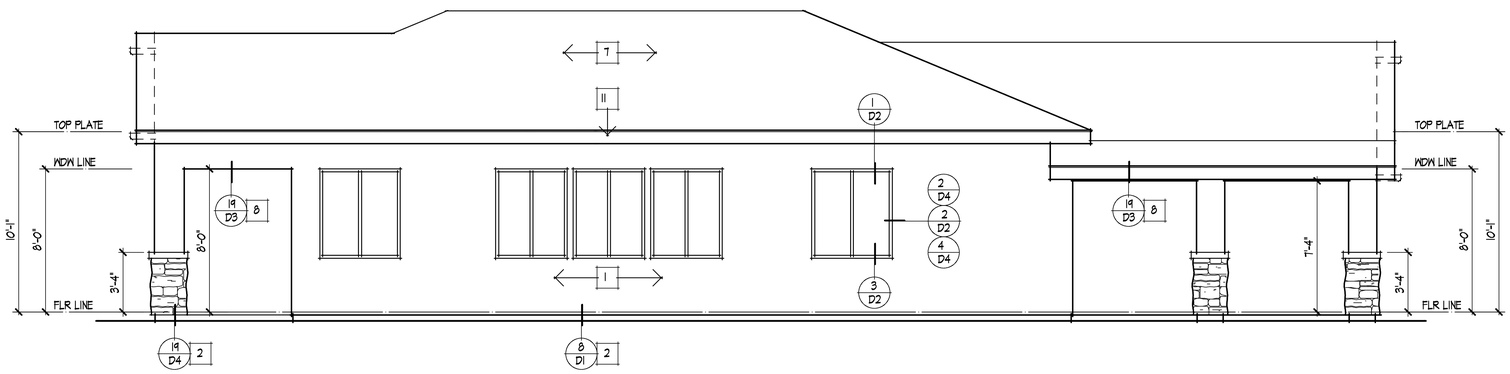

RIGHT

SCALE: 1/4" = 1'-0"

B

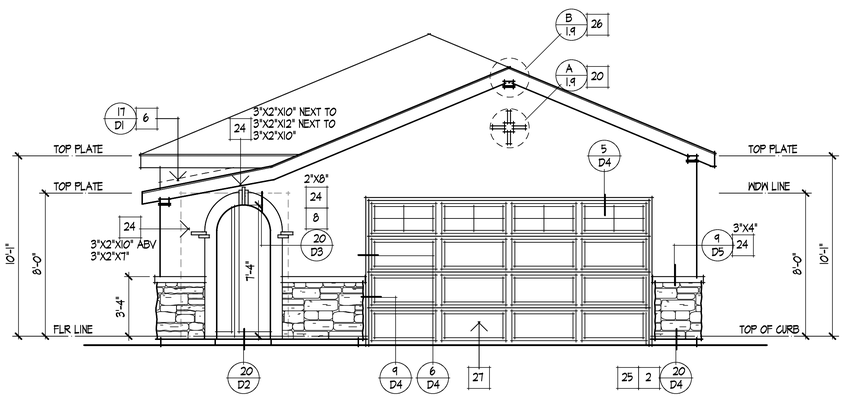

REAR

SCALE: 1/4" = 1'-0"

B

ELEVATION NOTES

1. 7/8" STUCCO (REFER TO GENERAL NOTES)
2. CONTINUOUS G.I. STUCCO SCREED (REFER TO DETAIL)
3. APPROVED SPARK ARRESTER BY FIREPLACE MFR.
4. G.I. SADDLE AND FLASHING
5. G.I. CHIMNEY CAP BY FIREPLACE MFR.
6. G.I. FLASHING
7. ROOF MATERIAL (REFER TO ROOF NOTES)
8. STUCCO SOFFIT O/ METAL LATH O/ BUILDING PAPER
9. ATTIC VENT (REFER TO ATTIC VENT CALCS)
10. 3X6 RAFTER TAILS
11. RE/S FASCIA OR BARGE BOARD. SEE ELEVATIONS FOR SIZE.
12. RE/S TRIM. SEE ELEVATIONS FOR SIZE.
13. STUCCO OVER 2X TRIM
14. POT SHELF (REFER TO DETAIL)
15. LINE OF CEILING
16. LINE OF SHELF
17. LINE OF ROOF ABOVE
18. DECORATIVE FOAM PIPE
19. TYPICAL EXTERIOR SIDING
20. DECORATIVE TILE
21. WOOD SHUTTERS (NON ACTIVE)
22. WOOD CORBEL
23. STUCCO RECESS
24. FINISH COAT OVER FOAM TRIM. (REFER TO DETAIL)
25. ELDORADO STONE (ER-602) OR APPROVED EQUAL
26. WOOD OUTLOOKER
27. SECTIONAL GARAGE DOOR
28. WOOD RAIL OR W.I. RAIL (REFER TO DETAIL)
29. EXTERIOR GRADE PLYWOOD SOFFIT
30. 14" X 18" G.I. SCREENED AND LOUVERED COMBUSTION AIR VENT

KPI Inc.
KNITTER PARTNERS INTERNATIONAL, INC.
architecture & planning
1401 DOVE ST. SUITE 240
NEWPORT BEACH, CA 92660
PHONE: (949) 752-1177
FAX: (949) 752-0151
WWW.KNITTER.COM

©KNITTER PARTNERS INTERNATIONAL
ALL RIGHTS RESERVED 2013

THIS DOCUMENT IS THE PROPERTY AND COPYRIGHT OF KNITTER PARTNERS INTERNATIONAL, INC. AND SHALL NOT BE USE ON ANY OTHER WORK, BE REPRODUCED OR DISCLOSED TO OTHERS EXCEPT BY WRITTEN AUTHORIZATION FROM KNITTER PARTNERS INTERNATIONAL, INC.

NO.	DATE	REVISION

IMAGINE DEVELOPMENT L.L.C.

THE COLONY 65
LANCASTER, CALIFORNIA

LICENSED ARCHITECT
MICHAEL J. KNITTER
C10524
REN. 4-30-19
STATE OF CALIFORNIA

PROJECT INFO

PLAN 1

JOB NUMBER **3036**
PROJECT MGR. RC
DRAWN BY AD
PLOT DATE: 3-6-2018

SHEET TITLE

ELEVATION 'B' RIGHT & REAR ELEVATIONS

SHEET NUMBER

1.10

PLOT TIME: 11:02 AM PATH\NAME: G:\0_KPI\2013\13036 COLONY 65 PLANS\PLAN 1\3036 13 ELEVATION 1.DC5

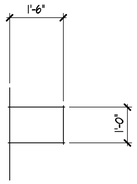

A WOOD OUTLOOKER
SCALE: 1/2" = 1'-0"

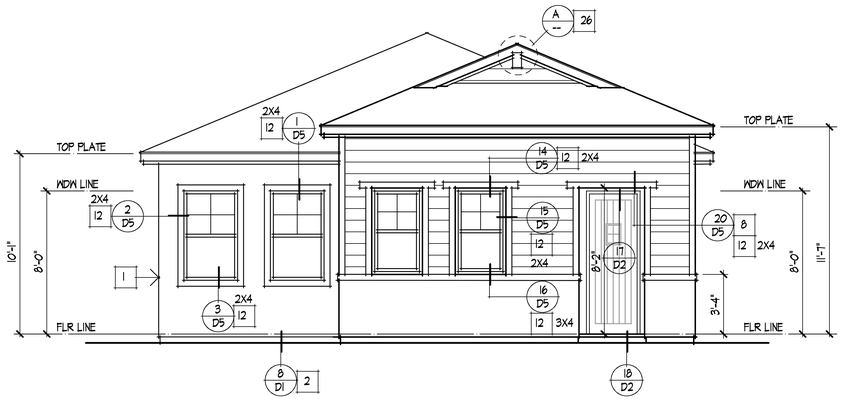

FRONT C
SCALE: 1/4" = 1'-0"

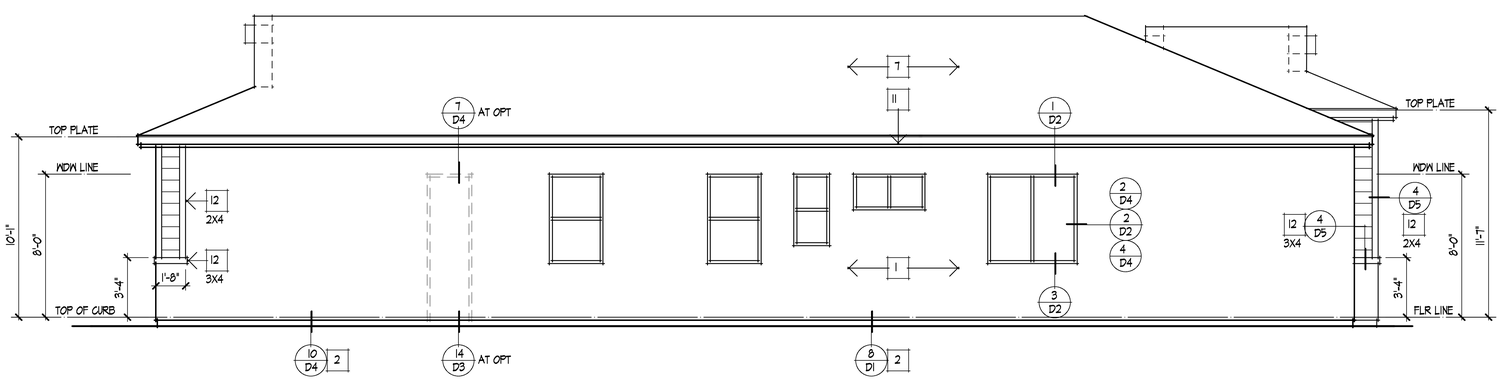

LEFT C
SCALE: 1/4" = 1'-0"

SEE SHEET 1.2.1 FOR ADDENDA INFORMATION PER ELEVATION.

ELEVATION NOTES

1. 7/8" STUCCO (REFER TO GENERAL NOTES)
2. CONTINUOUS G.I. STUCCO SCREED (REFER TO DETAIL)
3. APPROVED SPARK ARRESTER BY FIREPLACE MFR.
4. G.I. SADDLE AND FLASHING
5. G.I. CHIMNEY CAP BY FIREPLACE MFR.
6. G.I. FLASHING
7. ROOF MATERIAL (REFER TO ROOF NOTES)
8. STUCCO SOFFIT O/ METAL LATH O/ BUILDING PAPER
9. ATTIC VENT (REFER TO ATTIC VENT CALCS)
10. 3X6 RAFTER TAILS
11. RE/S FASCIA OR BARGE BOARD. SEE ELEVATIONS FOR SIZE.
12. RE/S TRIM. SEE ELEVATIONS FOR SIZE.
13. STUCCO OVER 2X TRIM
14. POT SHELF (REFER TO DETAIL)
15. LINE OF CEILING
16. LINE OF SHELF
17. LINE OF ROOF ABOVE
18. DECORATIVE FOAM PIPE
19. TYPICAL EXTERIOR SIDING
20. DECORATIVE TILE
21. WOOD SHUTTERS (NON ACTIVE)
22. WOOD CORBEL
23. STUCCO RECESS
24. FINISH COAT OVER FOAM TRIM. (REFER TO DETAIL)
25. ELDORADO STONE (ER-602) OR APPROVED EQUAL
26. WOOD OUTLOOKER
27. SECTIONAL GARAGE DOOR
28. WOOD RAIL OR W.I. RAIL (REFER TO DETAIL)
29. EXTERIOR GRADE PLYWOOD SOFFIT
30. 14" X 18" G.I. SCREENED AND LOUVERED COMBUSTION AIR VENT

KPI Inc.
KNITTER PARTNERS INTERNATIONAL, INC.
architecture & planning
1401 DOVE ST. SUITE 240
NEWPORT BEACH, CA 92660
PHONE: (949) 752-1177
FAX: (949) 752-0151
WWW.KNITTER.COM

©KNITTER PARTNERS INTERNATIONAL
ALL RIGHTS RESERVED 2013

THIS DOCUMENT IS THE PROPERTY AND COPYRIGHT OF KNITTER PARTNERS INTERNATIONAL, INC. AND SHALL NOT BE USE ON ANY OTHER WORK, BE REPRODUCED OR DISCLOSED TO OTHERS EXCEPT BY WRITTEN AUTHORIZATION FROM KNITTER PARTNERS INTERNATIONAL, INC.

NO.	DATE	REVISION
△		
△		
△		
△		
△		

IMAGINE DEVELOPMENT L.L.C.

THE COLONY 65
LANCASTER, CALIFORNIA

LICENSED ARCHITECT
MICHAEL J. KNITTER
C10524
REN. 4-30-19
STATE OF CALIFORNIA

PROJECT INFO
PLAN 1

JOB NUMBER **3036**
PROJECT MGR. RC
DRAWN BY AD
PLOT DATE: 4-24-2018

SHEET TITLE
ELEVATION 'C' FRONT & LEFT ELEVATION

SHEET NUMBER
1.11

PLOT TIME: 3:32 PM PATH\NAME: G:\0_KPI\2013\13036 COLONY 65 PLANS\PLAN 1\3036 13 ELEVATION 1.DC5

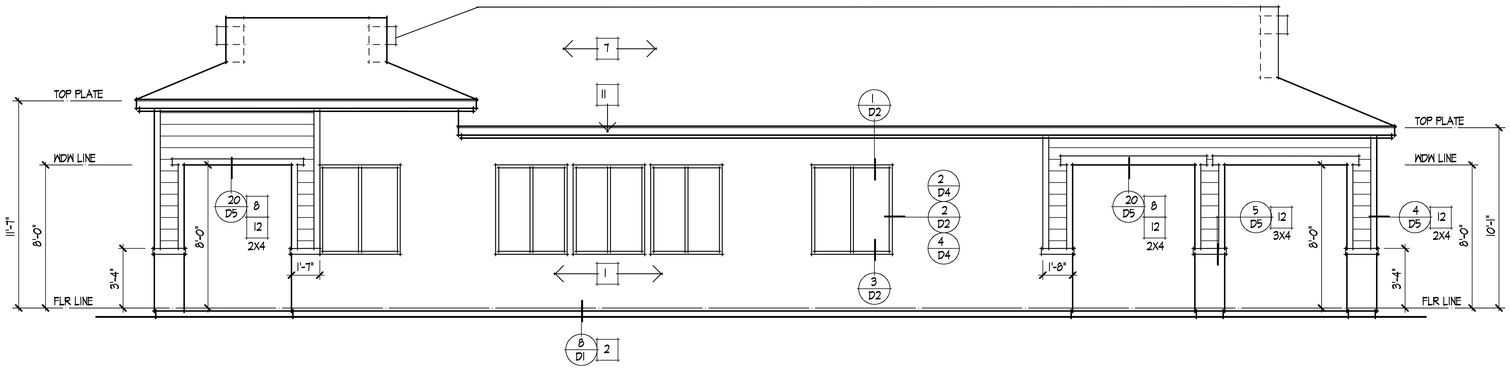

RIGHT

SCALE: 1/4" = 1'-0"

C

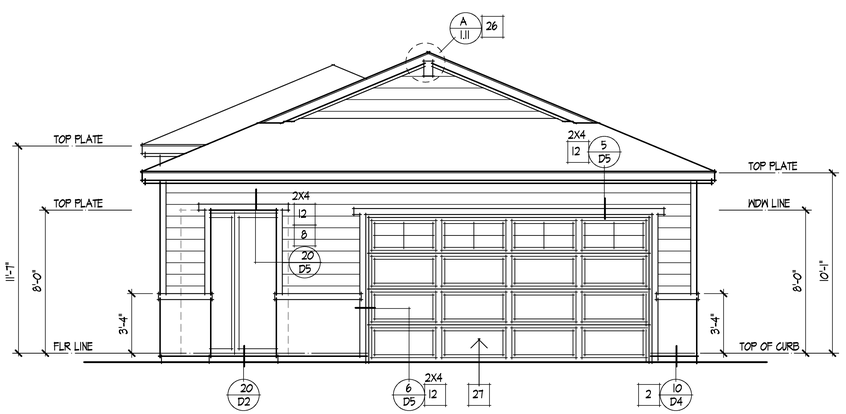

REAR

SCALE: 1/4" = 1'-0"

C

ELEVATION NOTES

1. 7/8" STUCCO (REFER TO GENERAL NOTES)
2. CONTINUOUS G.I. STUCCO SCREED (REFER TO DETAIL)
3. APPROVED SPARK ARRESTER BY FIREPLACE MFR.
4. G.I. SADDLE AND FLASHING
5. G.I. CHIMNEY CAP BY FIREPLACE MFR.
6. G.I. FLASHING
7. ROOF MATERIAL (REFER TO ROOF NOTES)
8. STUCCO SOFFIT O/ METAL LATH O/ BUILDING PAPER
9. ATTIC VENT (REFER TO ATTIC VENT CALCS)
10. 3X6 RAFTER TAILS
11. RE/S FASCIA OR BARGE BOARD. SEE ELEVATIONS FOR SIZE.
12. RE/S TRIM. SEE ELEVATIONS FOR SIZE.
13. STUCCO OVER 2X TRIM
14. POT SHELF (REFER TO DETAIL)
15. LINE OF CEILING
16. LINE OF SHELF
17. LINE OF ROOF ABOVE
18. DECORATIVE FOAM PIPE
19. TYPICAL EXTERIOR SIDING
20. DECORATIVE TILE
21. WOOD SHUTTERS (NON ACTIVE)
22. WOOD CORBEL
23. STUCCO RECESS
24. FINISH COAT OVER FOAM TRIM. (REFER TO DETAIL)
25. ELDORADO STONE (ER-602) OR APPROVED EQUAL
26. WOOD OUTLOOKER
27. SECTIONAL GARAGE DOOR
28. WOOD RAIL OR W.I. RAIL (REFER TO DETAIL)
29. EXTERIOR GRADE PLYWOOD SOFFIT
30. 14" X 18" G.I. SCREENED AND LOUVERED COMBUSTION AIR VENT

KPI Inc.
KNITTER PARTNERS INTERNATIONAL, INC.
architecture & planning
1401 DOVE ST. SUITE 240
NEWPORT BEACH, CA 92660
PHONE: (949) 752-1177
FAX: (949) 752-0151
WWW.KNITTER.COM

©KNITTER PARTNERS INTERNATIONAL
ALL RIGHTS RESERVED 2013

THIS DOCUMENT IS THE PROPERTY AND COPYRIGHT OF KNITTER PARTNERS INTERNATIONAL, INC. AND SHALL NOT BE USE ON ANY OTHER WORK, BE REPRODUCED OR DISCLOSED TO OTHERS EXCEPT BY WRITTEN AUTHORIZATION FROM KNITTER PARTNERS INTERNATIONAL, INC.

NO.	DATE	REVISION
△		
△		
△		
△		
△		

IMAGINE DEVELOPMENT L.L.C.

THE COLONY 65
LANCASTER, CALIFORNIA

LICENSED ARCHITECT
MICHAEL J. KNITTER
C10524
REN. 4-30-19
STATE OF CALIFORNIA

PROJECT INFO
PLAN 1

JOB NUMBER **3036**
PROJECT MGR. RC
DRAWN BY AD
PLOT DATE: 3-6-2018

SHEET TITLE
ELEVATION 'C' RIGHT & REAR ELEVATIONS

SHEET NUMBER
1.12

PLOT TIME: 11:02 AM PATH\NAME: G:\0_KPI\2013\13036 COLONY 65 PLANS\PLAN 1\3036 13 ELEVATION 1.DC5

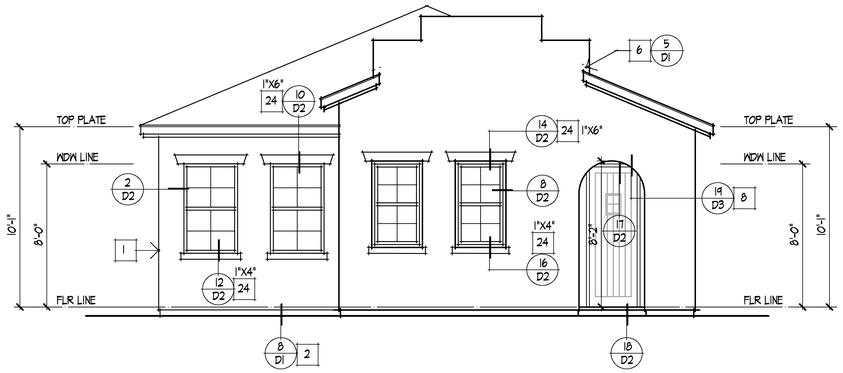

FRONT D

SCALE: 1/4" = 1'-0"

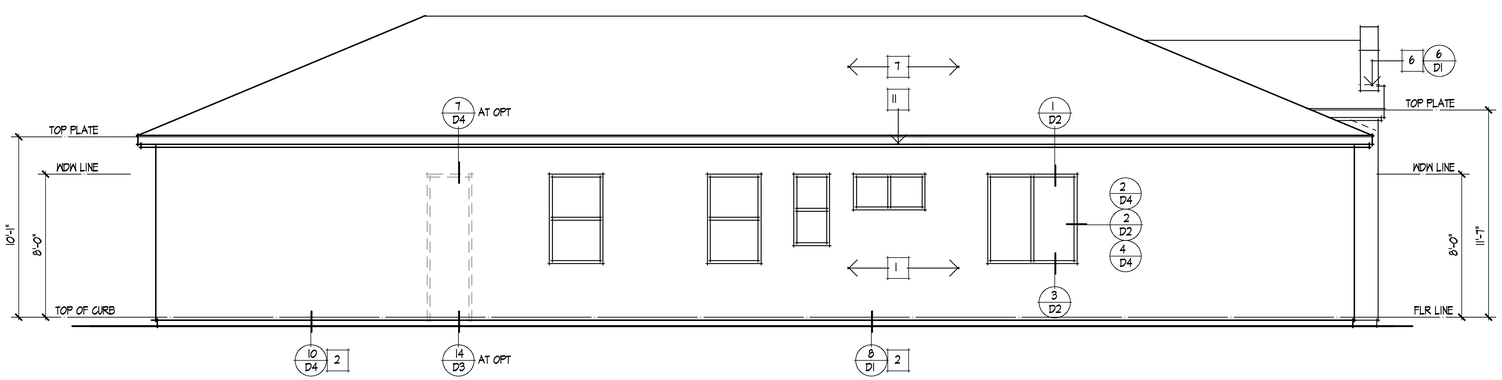

LEFT D

SCALE: 1/4" = 1'-0"

SEE SHEET 1.2.2 FOR ADDENDA INFORMATION PER ELEVATION.

ELEVATION NOTES

1. 7/8" STUCCO (REFER TO GENERAL NOTES)
2. CONTINUOUS G.I. STUCCO SCREED (REFER TO DETAIL)
3. APPROVED SPARK ARRESTER BY FIREPLACE MFR.
4. G.I. SADDLE AND FLASHING
5. G.I. CHIMNEY CAP BY FIREPLACE MFR.
6. G.I. FLASHING
7. ROOF MATERIAL (REFER TO ROOF NOTES)
8. STUCCO SOFFIT O/ METAL LATH O/ BUILDING PAPER
9. ATTIC VENT (REFER TO ATTIC VENT CALCS)
10. 3X6 RAFTER TAILS
11. RE/S FASCIA OR BARGE BOARD. SEE ELEVATIONS FOR SIZE.
12. RE/S TRIM. SEE ELEVATIONS FOR SIZE.
13. STUCCO OVER 2X TRIM
14. POT SHELF (REFER TO DETAIL)
15. LINE OF CEILING
16. LINE OF SHELF
17. LINE OF ROOF ABOVE
18. DECORATIVE FOAM PIPE
19. TYPICAL EXTERIOR SIDING
20. DECORATIVE TILE
21. WOOD SHUTTERS (NON ACTIVE)
22. WOOD CORBEL
23. STUCCO RECESS
24. FINISH COAT OVER FOAM TRIM. (REFER TO DETAIL)
25. ELDORADO STONE (ER-602) OR APPROVED EQUAL
26. WOOD OUTLOOKER
27. SECTIONAL GARAGE DOOR
28. WOOD RAIL OR W.I. RAIL (REFER TO DETAIL)
29. EXTERIOR GRADE PLYWOOD SOFFIT
30. 14" X 18" G.I. SCREENED AND LOUVERED COMBUSTION AIR VENT

KPI Inc.
KNITTER PARTNERS INTERNATIONAL, INC.
architecture & planning
1401 DOVE ST. SUITE 240
NEWPORT BEACH, CA 92660
PHONE: (949) 752-1177
FAX: (949) 752-0151
WWW.KNITTER.COM

©KNITTER PARTNERS INTERNATIONAL
ALL RIGHTS RESERVED 2013

THIS DOCUMENT IS THE PROPERTY AND COPYRIGHT OF KNITTER PARTNERS INTERNATIONAL, INC. AND SHALL NOT BE USE ON ANY OTHER WORK, BE REPRODUCED OR DISCLOSED TO OTHERS EXCEPT BY WRITTEN AUTHORIZATION FROM KNITTER PARTNERS INTERNATIONAL, INC.

NO.	DATE	REVISION
△		
△		
△		
△		
△		

IMAGINE DEVELOPMENT L.L.C.

THE COLONY 65
LANCASTER, CALIFORNIA

LICENSED ARCHITECT
MICHAEL J. KNITTER
C10524
REN. 4-30-19
STATE OF CALIFORNIA

PROJECT INFO
PLAN 1

JOB NUMBER **3036**
PROJECT MGR. RC
DRAWN BY AD
PLOT DATE: 3-6-2018

SHEET TITLE
ELEVATION 'D' FRONT & LEFT ELEVATION

SHEET NUMBER
1.13

PLOT TIME: 11:02 AM PATH\NAME: G:\0_KPI\2013\13036 COLONY 65 PLANS\PLAN 1\3036 13 ELEVATION 1.DC5

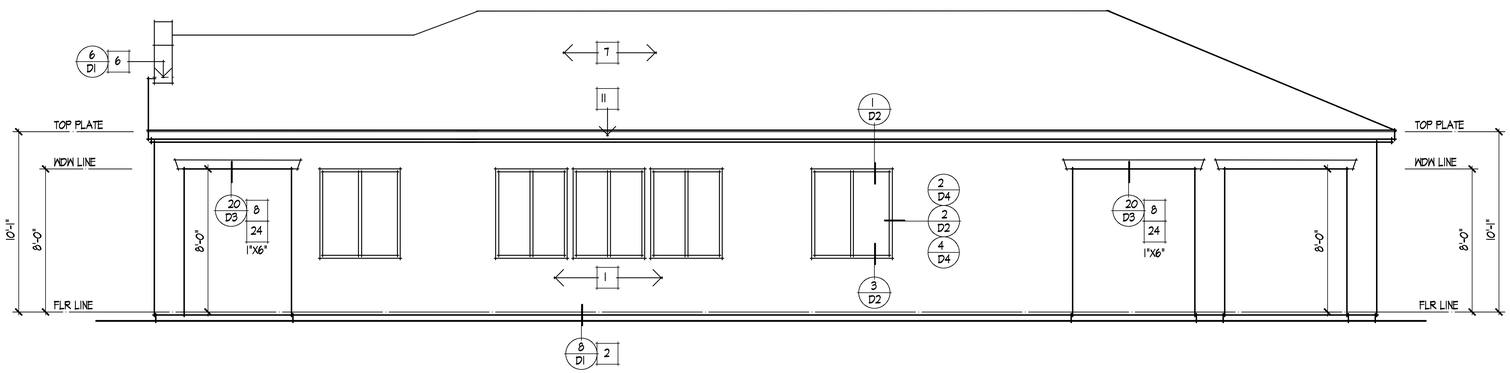

RIGHT D

SCALE: 1/4" = 1'-0"

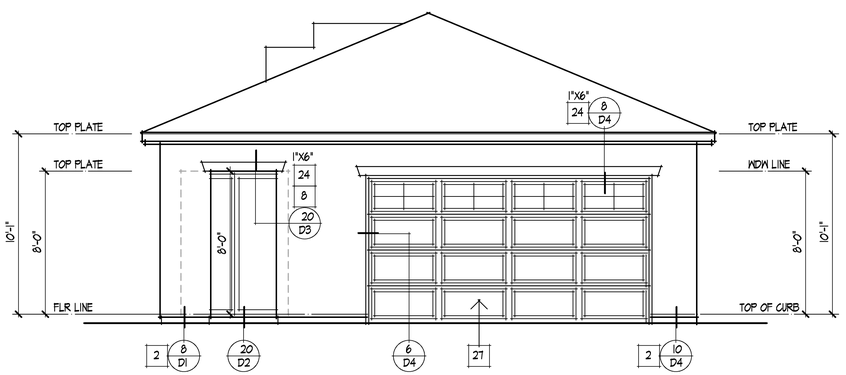

REAR D

SCALE: 1/4" = 1'-0"

ELEVATION NOTES

1. 7/8" STUCCO (REFER TO GENERAL NOTES)
2. CONTINUOUS G.I. STUCCO SCREED (REFER TO DETAIL)
3. APPROVED SPARK ARRESTER BY FIREPLACE MFR.
4. G.I. SADDLE AND FLASHING
5. G.I. CHIMNEY CAP BY FIREPLACE MFR.
6. G.I. FLASHING
7. ROOF MATERIAL (REFER TO ROOF NOTES)
8. STUCCO SOFFIT O/ METAL LATH O/ BUILDING PAPER
9. ATTIC VENT (REFER TO ATTIC VENT CALCS)
10. 3X6 RAFTER TAILS
11. RE/S FASCIA OR BARGE BOARD. SEE ELEVATIONS FOR SIZE.
12. RE/S TRIM. SEE ELEVATIONS FOR SIZE.
13. STUCCO OVER 2X TRIM
14. POT SHELF (REFER TO DETAIL)
15. LINE OF CEILING
16. LINE OF SHELF
17. LINE OF ROOF ABOVE
18. DECORATIVE FOAM PIPE
19. TYPICAL EXTERIOR SIDING
20. DECORATIVE TILE
21. WOOD SHUTTERS (NON ACTIVE)
22. WOOD CORBEL
23. STUCCO RECESS
24. FINISH COAT OVER FOAM TRIM. (REFER TO DETAIL)
25. ELDORADO STONE (ER-602) OR APPROVED EQUAL
26. WOOD OUTLOOKER
27. SECTIONAL GARAGE DOOR
28. WOOD RAIL OR W.I. RAIL (REFER TO DETAIL)
29. EXTERIOR GRADE PLYWOOD SOFFIT
30. 14" X 18" G.I. SCREENED AND LOUVERED COMBUSTION AIR VENT

KPI Inc.
KNITTER PARTNERS INTERNATIONAL, INC.
architecture & planning
1401 DOVE ST. SUITE 240
NEWPORT BEACH, CA 92660
PHONE: (949) 752-1177
FAX: (949) 752-0151
WWW.KNITTER.COM

©KNITTER PARTNERS INTERNATIONAL
ALL RIGHTS RESERVED 2013

THIS DOCUMENT IS THE PROPERTY AND COPYRIGHT OF KNITTER PARTNERS INTERNATIONAL, INC. AND SHALL NOT BE USE ON ANY OTHER WORK, BE REPRODUCED OR DISCLOSED TO OTHERS EXCEPT BY WRITTEN AUTHORIZATION FROM KNITTER PARTNERS INTERNATIONAL, INC.

NO.	DATE	REVISION

IMAGINE DEVELOPMENT L.L.C.

THE COLONY 65
LANCASTER, CALIFORNIA

LICENSED ARCHITECT
MICHAEL J. KNITTER
C10524
REN. 4-30-19
STATE OF CALIFORNIA

PROJECT INFO
PLAN 1

JOB NUMBER **3036**
PROJECT MGR. RC
DRAWN BY AD
PLOT DATE: 3-6-2018

SHEET TITLE
ELEVATION 'D' RIGHT & REAR ELEVATIONS

SHEET NUMBER
1.14

PLOT TIME: 11:02 AM PATH\NAME: G:\0_KPI\2013\13036 COLONY 65 PLANS\PLAN 1\3036 13 ELEVATION 1.DC5

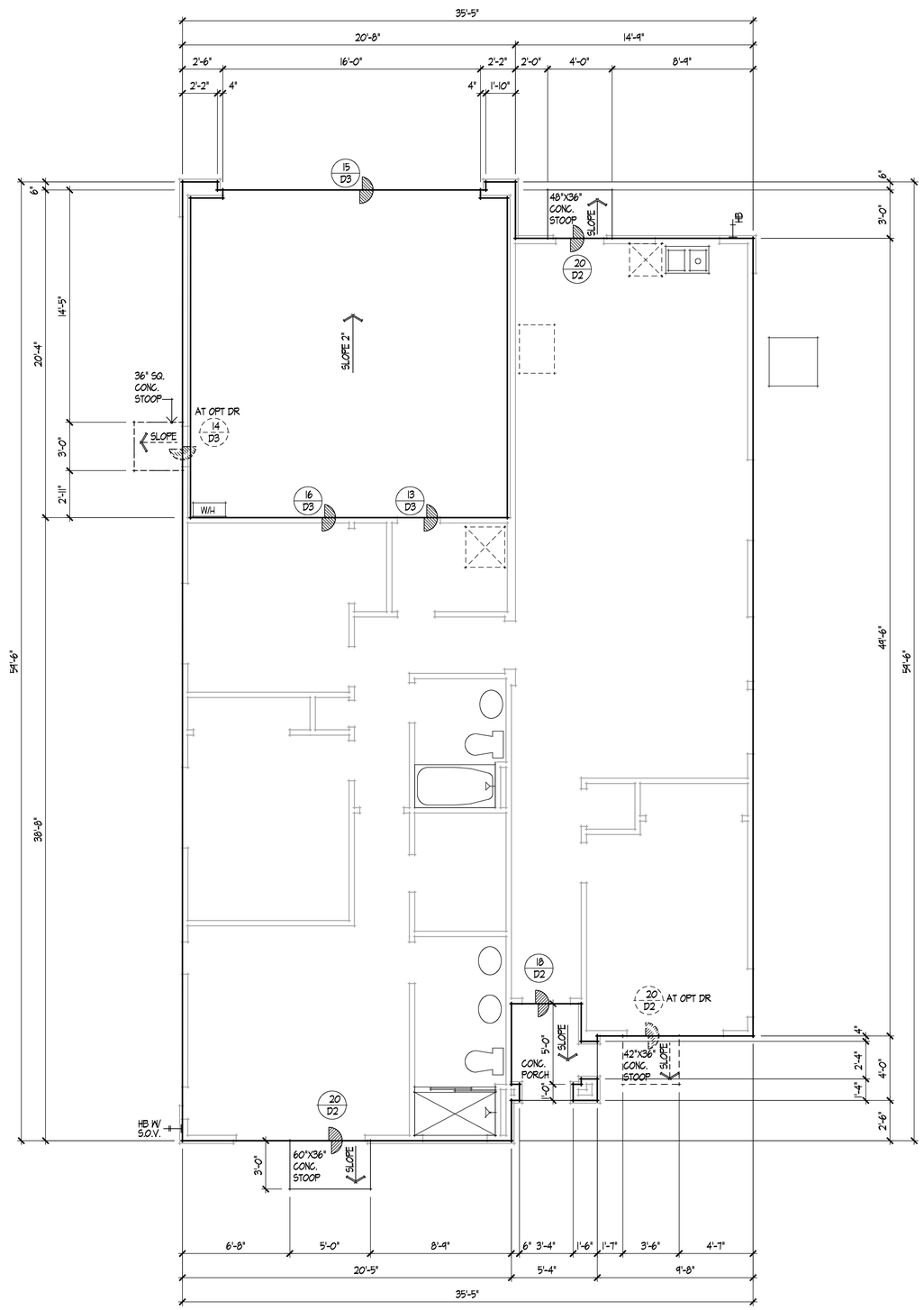

SLAB INTERFACE PLAN - A

SCALE: 1/4" = 1'-0"

CONCRETE PLACEMENT

THE FOLLOWING ARE ARCHITECTUAL MINIMUM STANDARDS ONLY. REFER TO PROJECT SOILS REPORT AND STRUCTURAL ENGINEERS DRAWINGS FOR NOTES AND INFORMATION NOT SHOWN HERE.

CONCRETE SLABS:

CONCRETE SLABS SHALL BE PLACED OVER A MINIMUM OF 1" CLEAN DAMP SAND OVER 6 MIL. VISQUEEN OVER 1" CLEAN DAMP SAND.

CONCRETE STOOPS:

CONCRETE STOOPS SHALL BE PROVIDED AT EACH EXTERIOR DOOR.
STOOP SHALL BE A MINIMUM OF 1'-0" WIDER THAN THE DOOR 6" EACH SIDE.
STOOP SHALL PROJECT A MINIMUM OF 36" IN FRONT OF DOOR OPENING.
STOOP SHALL BE A MIN. OF 3-1/2" THICK.
STOOP SHALL BE ATTATCHED TO HOUSE W/ # 4 REBARS AT 24" O/C. (MINIMUM 2)

CONCRETE PORCHES:

CONCRETE PORCHES SHALL BE PROVIDED AT THE FRONT OR MAIN ENTRY DOOR.
PORCH DIMENSIONS ARE NOTED ON PLANS.
PORCH SHALL BE A MINIMUM OF 3-1/2" THICK.
PORCH SHALL BE ATTATCHED TO HOUSE W/ # 4 REBARS AT 24" O/C. (MINIMUM 2)
EXCEPTION , WOOD PORCHES. SEE PLAN.

INDICATES DROP IN SLAB (SEE DETAILS)

DRIVEWAYS AND FLATWORK :

SEE CIVIL ENGINEERING DRAWING FOR DRIVEWAYS AND FLATWORK.
REFER TO GENERAL NOTES SHEET G-1 DIV. 3 FOR FURTHER ARCHITECTURAL CONCRETE MINIMUM REQUIRMENTS.

DEPARTMENT OF PUBLIC WORKS

PRIOR TO REQUESTING A FOUNDATION INSPECTION, THE ENGINEER OF RECORD SHALL FIELD VERIFY THE BUILDING PAD HEIGHT AND SUBMIT A LETTER TO THE CITY ENGINEER CERTIFIYING THE BUILDING PAD HEIGHT AS COMPLYING W/ THE APPROVED GRADING PLAN.

ARCHITECTURAL REFERENCE ONLY. SEE STRUCTURAL ENGINEERS PLANS FOR STRUCTURAL INFORMATION NOT SHOWN HERE

KPI INC.
KNITTER PARTNERS INTERNATIONAL, INC.
architecture & planning
1401 DOVE ST. SUITE 240
NEWPORT BEACH, CA 92660
PHONE: (949) 752-1177
FAX: (949) 752-0151
WWW.KNITTER.COM

©KNITTER PARTNERS INTERNATIONAL
ALL RIGHTS RESERVED 2013

THIS DOCUMENT IS THE PROPERTY AND COPYRIGHT OF KNITTER PARTNERS INTERNATIONAL, INC. AND SHALL NOT BE USE ON ANY OTHER WORK, BE REPRODUCED OR DISCLOSED TO OTHERS EXCEPT BY WRITTEN AUTHORIZATION FROM KNITTER PARTNERS INTERNATIONAL, INC.

NO.	DATE	REVISION
△		
△		
△		
△		
△		

IMAGINE DEVELOPMENT L.L.C.

THE COLONY 65
LANCASTER, CALIFORNIA

LICENSED ARCHITECT
MICHAEL J. KNITTER
C10524
REN. 4-30-19
STATE OF CALIFORNIA

PROJECT INFO
PLAN 2

JOB NUMBER **3036**
PROJECT MGR. RC
DRAWN BY AD
PLOT DATE: 3-6-2018

SHEET TITLE
SLAB INTERFACE PLAN

SHEET NUMBER
2.1

PLOT TIME: 11:04 AM PATH\NAME: G:\0_KPI\2013\13036 COLONY 65 PLANS\PLAN 2\3036 20 PLAN 2.DC5

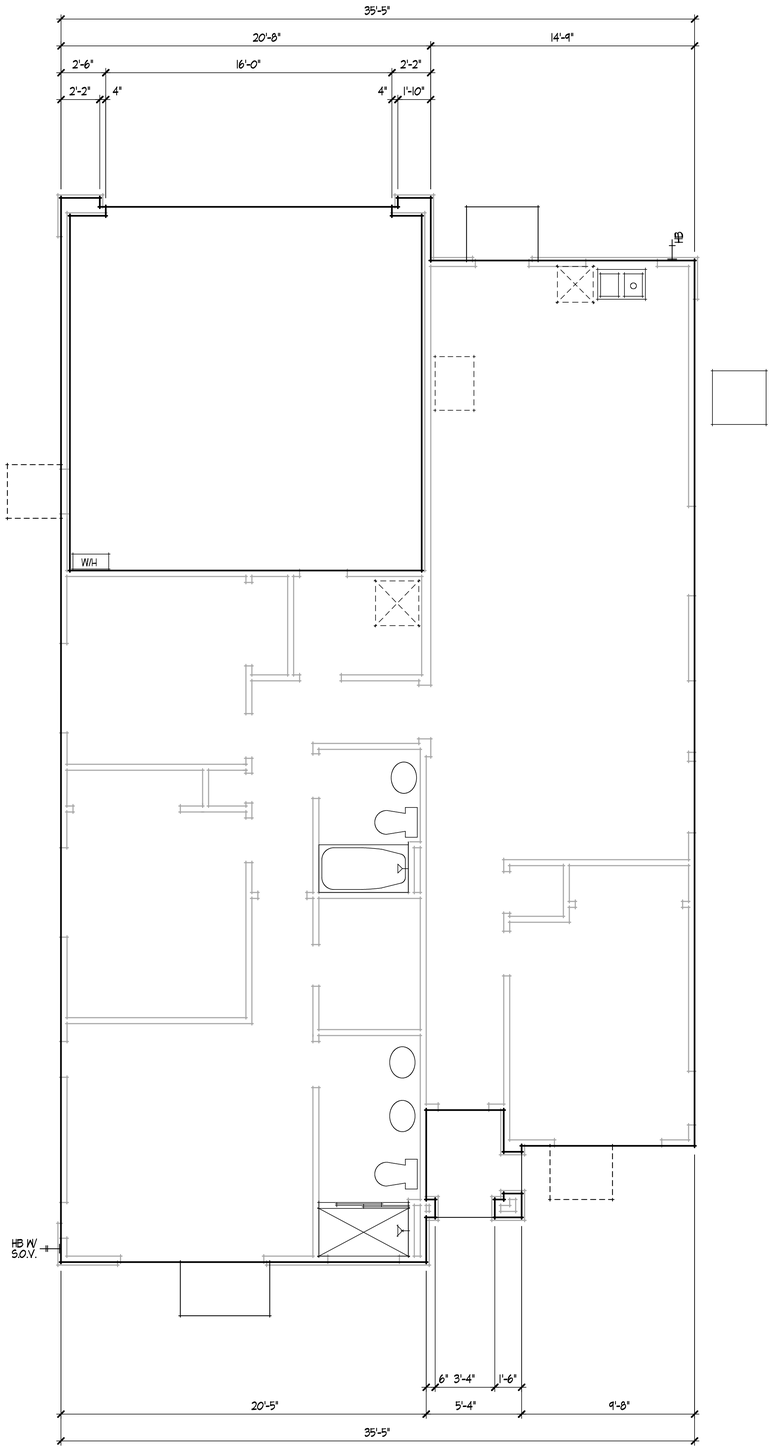

SLAB INTERFACE PLAN ADDENDUM - B

SCALE: 1/4" = 1'-0"

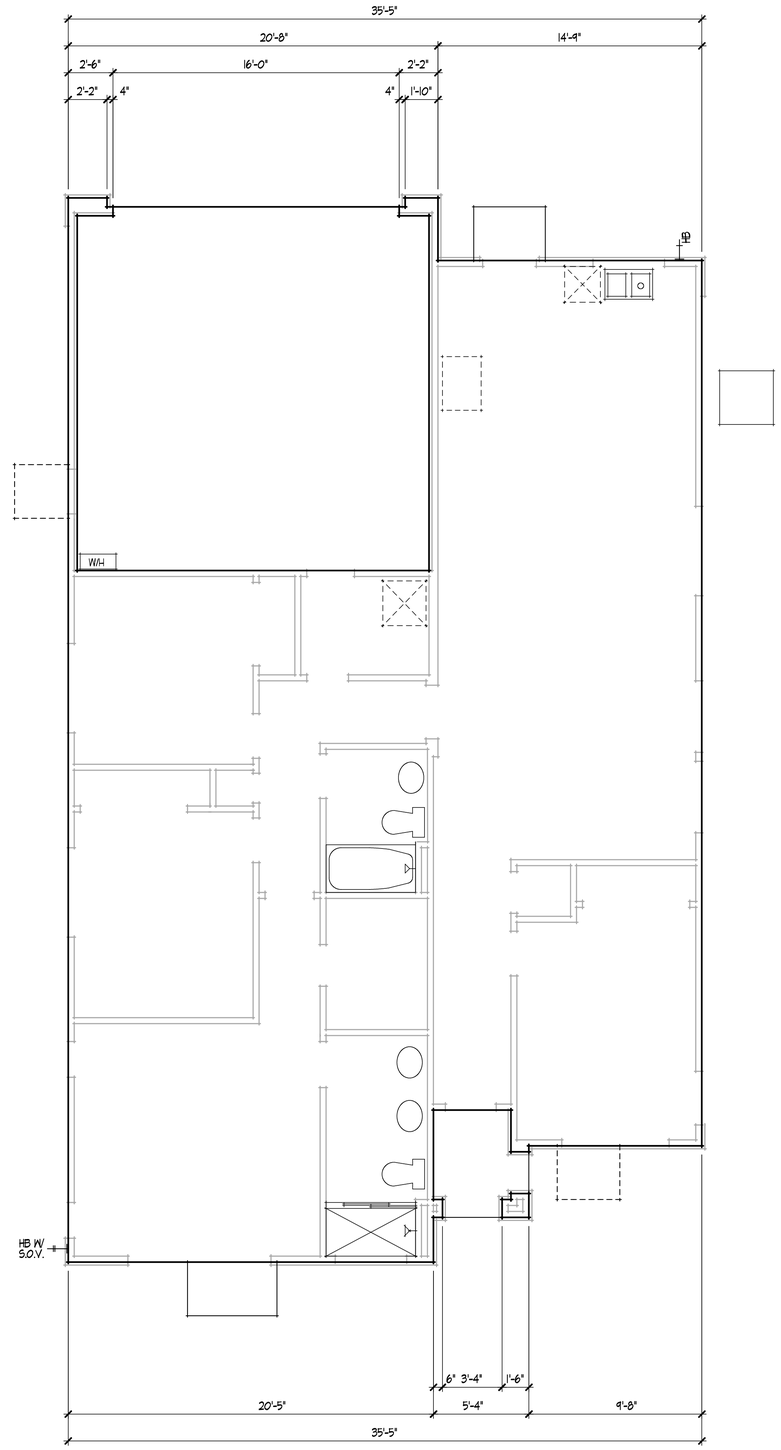

SLAB INTERFACE PLAN ADDENDUM - C

SCALE: 1/4" = 1'-0"

PLOT TIME: 9:18 AM PATH\NAME: G:\0_KPI\2013\13036 COLONY 65 PLANS\PLAN 2\3036 21 PLAN 2 ADDENDA.DC5

KPI INC.

KNITTER PARTNERS INTERNATIONAL, INC.
architecture & planning

1401 DOVE ST. SUITE 240
NEWPORT BEACH, CA 92660
PHONE: (949) 752-1177
FAX: (949) 752-0151
WWW.KNITTER.COM

©KNITTER PARTNERS INTERNATIONAL
ALL RIGHTS RESERVED 2013

THIS DOCUMENT IS THE PROPERTY AND COPYRIGHT OF KNITTER PARTNERS INTERNATIONAL, INC. AND SHALL NOT BE USE ON ANY OTHER WORK, BE REPRODUCED OR DISCLOSED TO OTHERS EXCEPT BY WRITTEN AUTHORIZATION FROM KNITTER PARTNERS INTERNATIONAL, INC.

NO.	DATE	REVISION
△		
△		
△		
△		
△		

IMAGINE DEVELOPMENT L.L.C.

THE COLONY 65
LANCASTER, CALIFORNIA

LICENSED ARCHITECT
MICHAEL J. KNITTER
C10524
REN. 4-30-19
STATE OF CALIFORNIA

PROJECT INFO
PLAN 2

JOB NUMBER **3036**
PROJECT MGR. RC
DRAWN BY AD
PLOT DATE: 3-6-2018

SHEET TITLE
SLAB INTERFACE ADDENDA

SHEET NUMBER
2.1.1

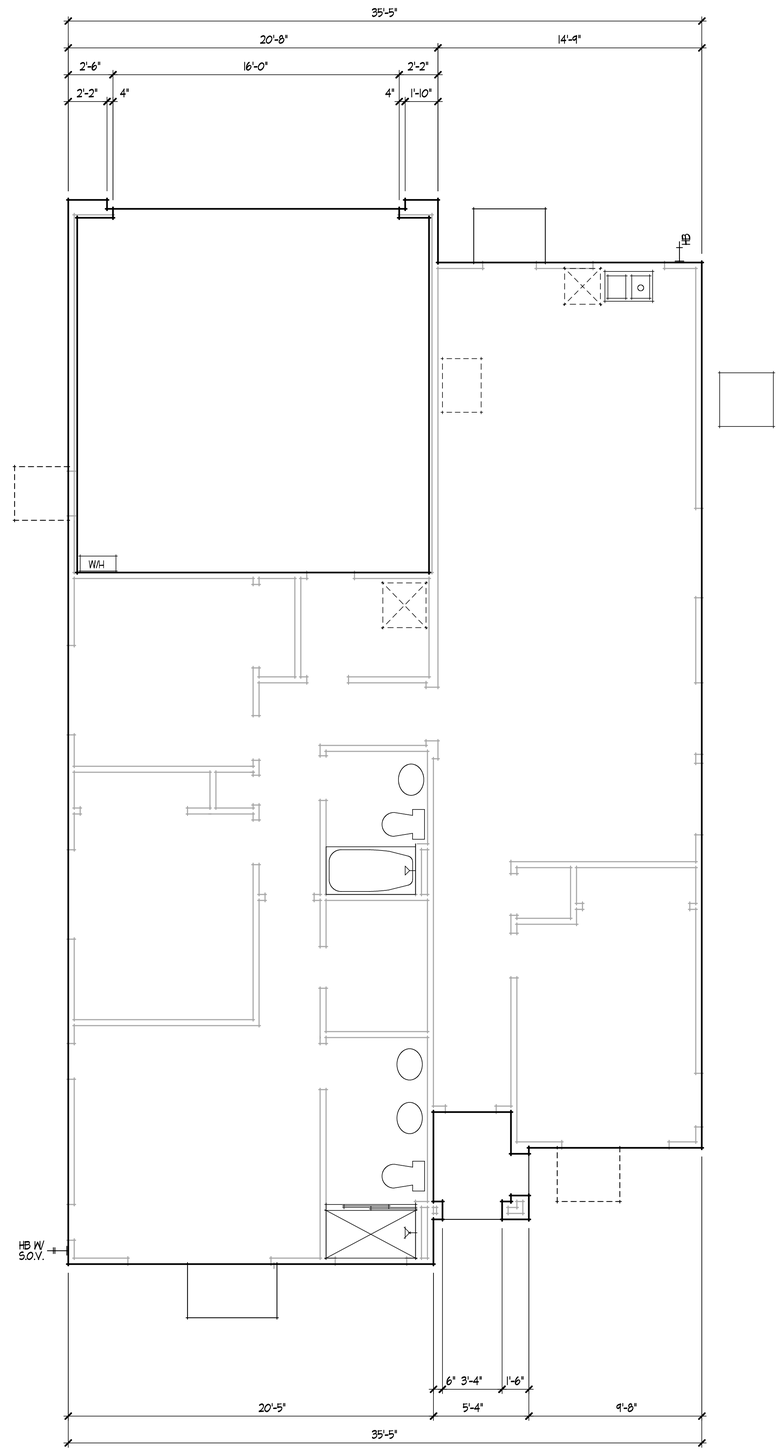

SLAB INTERFACE PLAN ADDENDUM - D

SCALE: 1/4" = 1'-0"

KPI Inc.

KNITTER PARTNERS INTERNATIONAL, INC.
architecture & planning

1401 DOVE ST. SUITE 240
NEWPORT BEACH, CA 92660
PHONE: (949) 752-1177
FAX: (949) 752-0151
WWW.KNITTER.COM

©KNITTER PARTNERS INTERNATIONAL
ALL RIGHTS RESERVED 2013

THIS DOCUMENT IS THE PROPERTY AND COPYRIGHT OF KNITTER PARTNERS INTERNATIONAL, INC. AND SHALL NOT BE USE ON ANY OTHER WORK, BE REPRODUCED OR DISCLOSED TO OTHERS EXCEPT BY WRITTEN AUTHORIZATION FROM KNITTER PARTNERS INTERNATIONAL, INC.

NO.	DATE	REVISION
△		
△		
△		
△		
△		

IMAGINE DEVELOPMENT L.L.C.

THE COLONY 65
LANCASTER, CALIFORNIA

LICENSED ARCHITECT
MICHAEL J. KNITTER
C10524
REN. 4-30-19
STATE OF CALIFORNIA

PROJECT INFO
PLAN 2

JOB NUMBER **3036**
PROJECT MGR. RC
DRAWN BY AD
PLOT DATE: 3-6-2018

SHEET TITLE
SLAB INTERFACE ADDENDUM

SHEET NUMBER
2.1.2

PLOT TIME: 9:19 AM PATH\NAME: G:\O_KPI\2013\13036 COLONY 65 PLANS\PLAN 2\3036 21 PLAN 2 ADDENDUM D.DC5

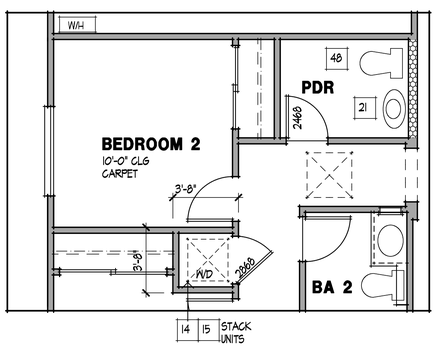

POWDER OPTION

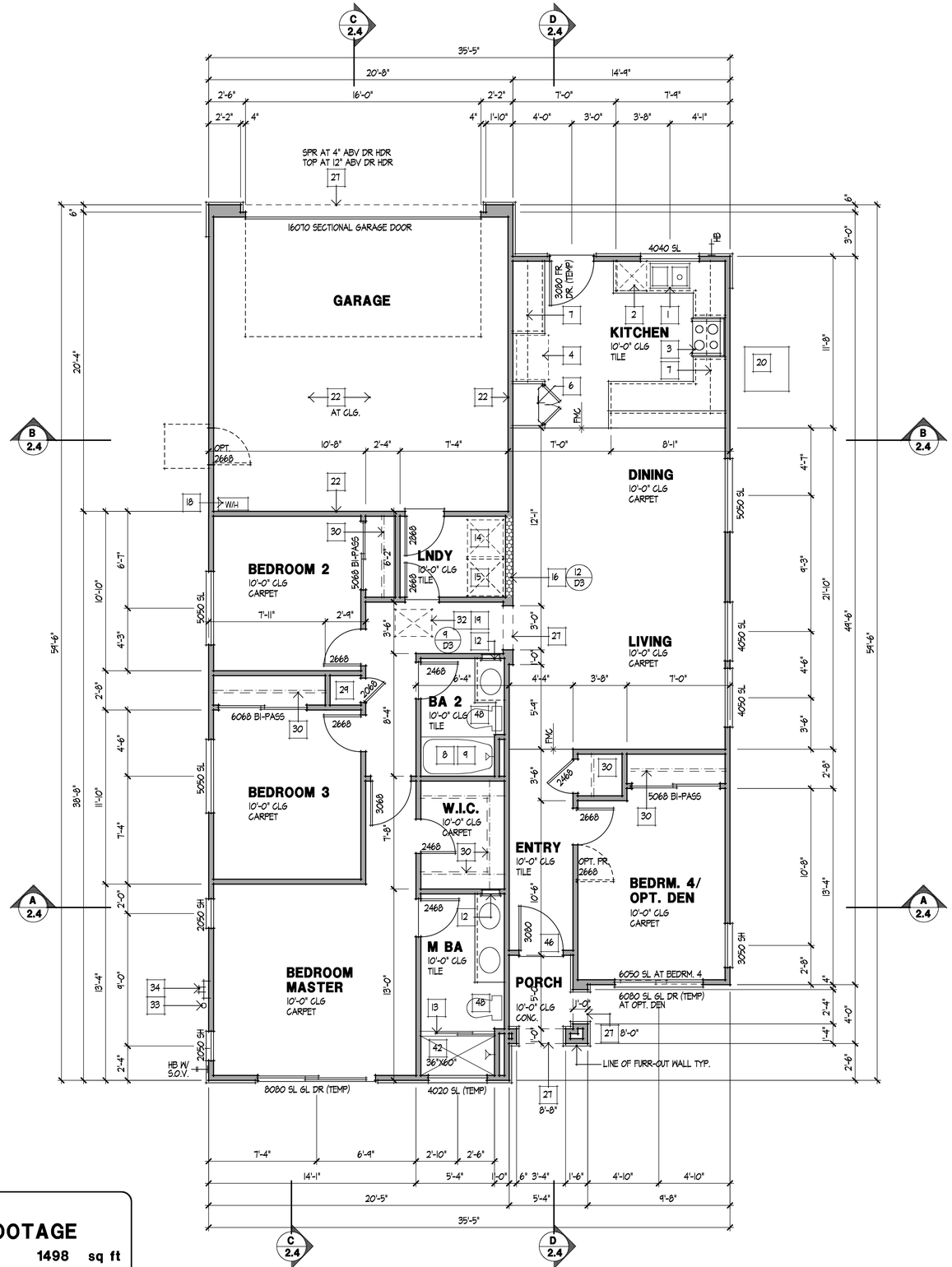

FLOOR PLAN - A

SCALE: 1/4" = 1'-0"

PLAN 2 SQUARE FOOTAGE

FLOOR PLAN	1498	sq ft
TOTAL	1498	sq ft
GARAGE	417	sq ft

FOR ARCHITECTS USE ONLY - DIMENSIONS TAKEN TO FACE OF STUDS

FLOOR PLAN NOTES

1. DOUBLE SINK WITH GARBAGE DISPOSAL (REFER TO INTERIOR ELEVATIONS)
2. BUILT IN DISHWASHER WITH AIR GAP (REFER TO INTERIOR ELEV'S)
3. SLIDE-IN COOKTOP RANGE WITH EXHAUST HOOD (MIN. 100 CFM) AND MICROWAVE OVEN ABOVE AND CONVENTIONAL OVEN BELOW (VENT TO O.S.A.)
4. PROVIDE 39" REFRIGERATOR SPACE (PROVIDE PLUMBING RECESSED IN WALL FOR ICE MAKER)
5. 30" WIDE MICROWAVE OVEN OVER CONVENTIONAL OVEN (REFER TO INTERIOR ELEVATIONS, VERIFY WITH MANUFACTURERS SPEC'S)
6. PANTRY WITH ADJUSTABLE SHELVES U.N.O. (REFER TO INTERIOR ELEVATIONS)
7. LINE OF CABINET/SHELF ABOVE (REFER TO INTERIOR ELEVATIONS)
8. PROVIDE CURTAIN ROD
9. 32" X 60" FIBERGLASS TUB WITH SHOWER TO 72" A.F.F. WITH SHOWER HEAD AT +80" A.F.F.
10. 42" X 60" FIBERGLASS OVAL TUB ON 18" HIGH MOISTURE RESISTANT PLATFORM
11. 102" X 42" FIBERGLASS TUB/SHOWER WITH WAINSCOT TO 78" ABOVE FINISH FLOOR AND SHOWER HEAD AT 80" A.F.F.
12. RECESSED MEDICINE CABINET (REFER TO INTERIOR ELEVATIONS)
13. SHATTER RESISTANT SHOWER ENCLOSURE-FULLY TEMPERED OR LAMINATED SAFETY GLASS
14. WASHER SPACE (PROVIDE RECESS NICHE IN WALL FOR PLUMBING AND PROVIDE WASTE LINE)(PROVIDE A "SMITTY" PAN W/ DRAIN TO BE TIED INTO A FIXTURE DRAIN BELOW WHEN WASHER IS LOCATED ON THE SECOND FLOOR)
15. DRYER SPACE (VENT TO O.S.A.)
16. LINE OF EXHAUST VENT
17. BACK DRAFT DAMPER
18. WATER HEATER PER CMC
    - PROVIDE SEISMIC STRAPS AT POINTS WITHIN THE UPPER AND LOWER ONE-THIRD OF ITS VERTICAL DIMENSION. LOWER STRAP LOCATED TO MAINTAIN MIN. 4" DISTANCE ABOVE CONTROLS.
    - PLACE W/H ON 18" HIGH RIGID PLATFORM
    - PROVIDE P.T. RELIEF VALVE TO OUTSIDE OR APPROVED DRAIN
19. FORCED AIR UNIT PER CMC
    - PROVIDE RIGID WOOD PLATFORM W/ RAG (14" MIN.)
    - PROVIDE CONDENSATE LINE TO DRAIN OUTSIDE OR APPROVED TRAPPED DRAIN(REFER TO HVAC DRAWINGS)
    - VERIFY SIZE AND CLEARANCE
    - PROVIDE COMBUSTION AIR AS REQUIRED
20. AIR CONDITIONER PAD (VARIFY SIZE WITH MANUFACTURER)
21. PEDESTAL SINK
22. INTERIOR GARAGE FINSH REFER TO SHEET GN3 OR GN4.

23A. METAL FIREPLACE (REFER TO GENERAL NOTES - DIVISION 10)

23B. GAS APPLIANCE (REFER TO GENERAL NOTES - DIVISION 10)

24. NONCOMBUSTIBLE HEARTH-MINIMUM 20" IN FRONT OF & 12" ON EACH SIDE OF FIREPLACE OPENING
25. LAUNDRY SINK
26. LINE OF SHELF (REFER TO PLAN FOR HEIGHT)
27. LINE OF SOFFIT ABOVE
28. LINE OF SHELF ABOVE (REFER TO PLAN FOR HEIGHT)
29. LINEN (REFER TO INTERIOR ELEVATIONS)
30. SHELF AND POLE
31. SHELF AND DOUBLE POLE
32. 20" x 30" MIN. (x MIN. 30" CLEAR HEADROOM) ATTIC ACCESS - CRC R807.1 (22" X 30" MIN. W/ ATTIC MTD. FAU - CMC 904.11.1)
33. GAS CO. SERVICE RISER (VERIFY LOCATION WITH UTILITY CO.)
34. ELECTRIC SERVICE MAIN, PROVIDE UFER GROUND (VERIFY LOCATION WITH UTILITY COMPANY)
35. LOW WALL (REFER TO PLAN FOR HEIGHT)
36. PROVIDE 1/2" GYPSUM BOARD AT WALLS & SOFFITS OF ENCLOSED USABLE SPACE UNDER STAIRS PER CRC SECTION R302.7
37. RAILING - REFER TO DETAIL 5/D3
38. GUARDRAIL - REFER TO DETAIL 5/D3
39. WALL MOUNTED HANDRAIL - REFER TO DETAIL 6/D3
40. LINE OF FLOOR ABOVE
41. LINE OF WALL BELOW
42. HAND MADE SHOWER PAN. SEE PLAN FOR SIZE.
43. DUCT CHASE
44. FIREPLACE FLUE PER UMC
45. KITCHEN ISLAND-SEE INTERIORS
46. DEAD BOLT AT TOP AND BOTTOM OF ENTRY DOOR, AND TOP ONLY OF INTERIOR DOORS
47. CEILING BREAK
48. WATER CLOSET (MAXIMUM 1.6 GALLONS PER FLUSH)
49. 36" HIGH STL. PIPE BUMPER
50. ELDORADO STONE (ER-602) OR APPROVED EQUAL

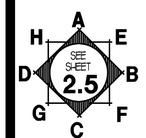

INTERIOR KEY

WALL FRAMING LEGEND

2X4 STUD WALL

2X6 STUD WALL

ALL SOFFITS SHALL BE 1'-0" BELOW CEILING U.N.O.

GENERAL PLAN NOTES

1) ALL INTERIOR DOORS TO BE HOLLOW CORE 1 3/8" THK. U.N.O. (REFER TO PLAN FOR SIZE)
2) ALL GARAGE MAN DOORS TO BE HOLLOW CORE 1 3/8" THK. EXTERIOR GRADE (REFER TO PLAN FOR SIZE)
3) ALL HOUSE TO GARAGE DOORS TO BE 20 MINUTE FIRE RATED OR SOLID CORE, SOLID WOOD OR HONEYCOMB CORE STEEL 1 3/8" THK. WITH SELF CLOSER AND SELF LATCHING AND TIGHT FITTING (REFER TO PLAN FOR SIZE)
4) ALL ENTRY DOORS AND TO BE SOLID CORE 1 3/4" THICK. (REFER TO PLAN FOR SIZE)
5) PROVIDE 100 SQ. IN. OF MAKE UP AIR AT THE LAUNDRY ROOM. (TO REPLACE AIR BEING EXHAUSTED BY DRYER VENT AND EXHAUST FAN IF APPLICABLE) PER CMC 504.3.2

KPI INC.

KNITTER PARTNERS INTERNATIONAL, INC.
architecture & planning

1401 DOVE ST. SUITE 240
NEWPORT BEACH, CA 92660
PHONE: (949) 752-1177
FAX: (949) 752-0151
WWW.KNITTER.COM

©KNITTER PARTNERS INTERNATIONAL
ALL RIGHTS RESERVED 2013

THIS DOCUMENT IS THE PROPERTY AND COPYRIGHT OF KNITTER PARTNERS INTERNATIONAL, INC. AND SHALL NOT BE USE ON ANY OTHER WORK, BE REPRODUCED OR DISCLOSED TO OTHERS EXCEPT BY WRITTEN AUTHORIZATION FROM KNITTER PARTNERS INTERNATIONAL, INC.

NO.	DATE	REVISION

IMAGINE DEVELOPMENT L.L.C.

THE COLONY 65
LANCASTER, CALIFORNIA

LICENSED ARCHITECT
MICHAEL J. KNITTER
C10524
REN. 4-30-19
STATE OF CALIFORNIA

PROJECT INFO

PLAN 2

JOB NUMBER **3036**
PROJECT MGR. RC
DRAWN BY AD
PLOT DATE: 3-6-2018

SHEET TITLE

FLOOR PLAN AND OPTION

SHEET NUMBER

2.2

PLOT TIME: 11:04 AM PATH\NAME: G:\0_KPI\2013\13036 COLONY 65 PLANS\PLAN 2\3036 20 PLAN 2.DC5

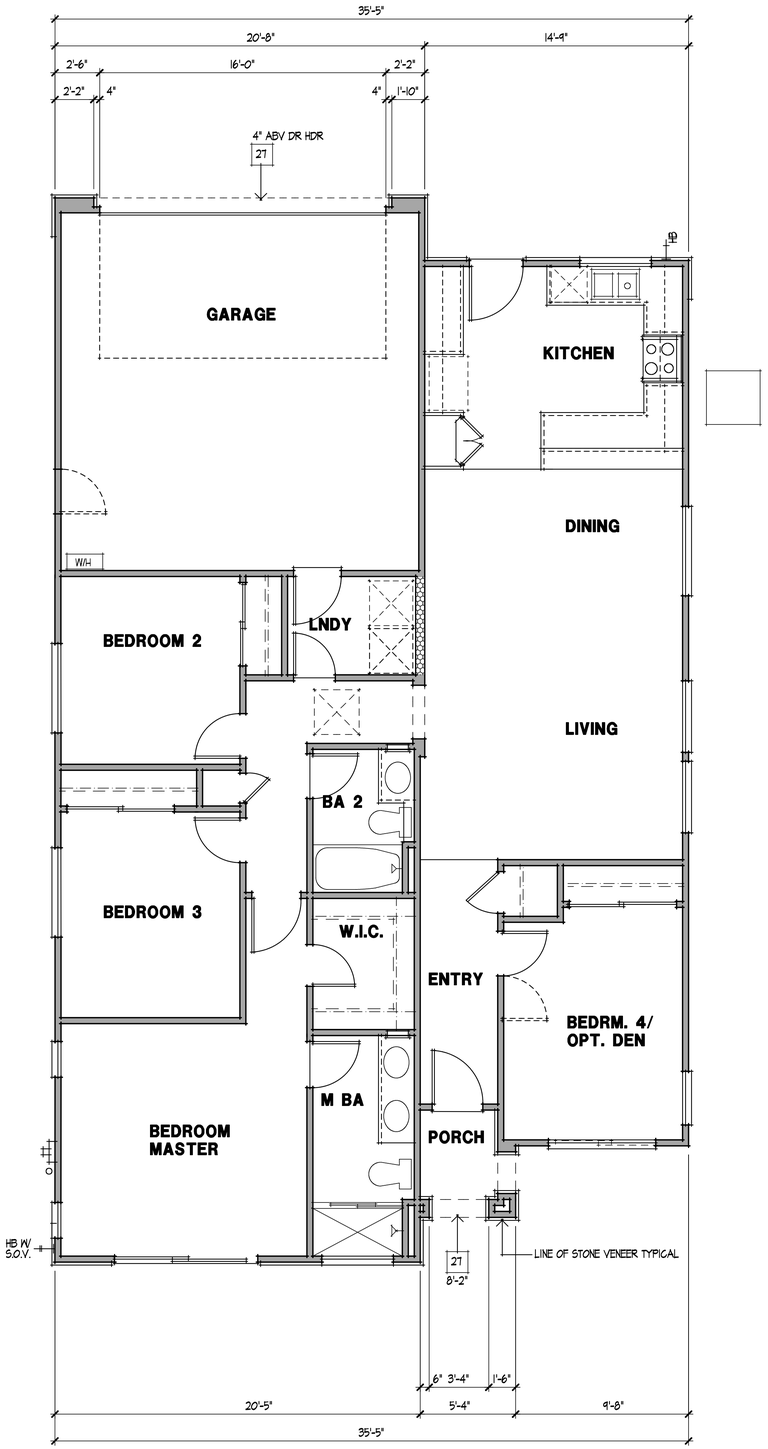

FLOOR PLAN ADDENDUM - B

SCALE: 1/4" = 1'-0"

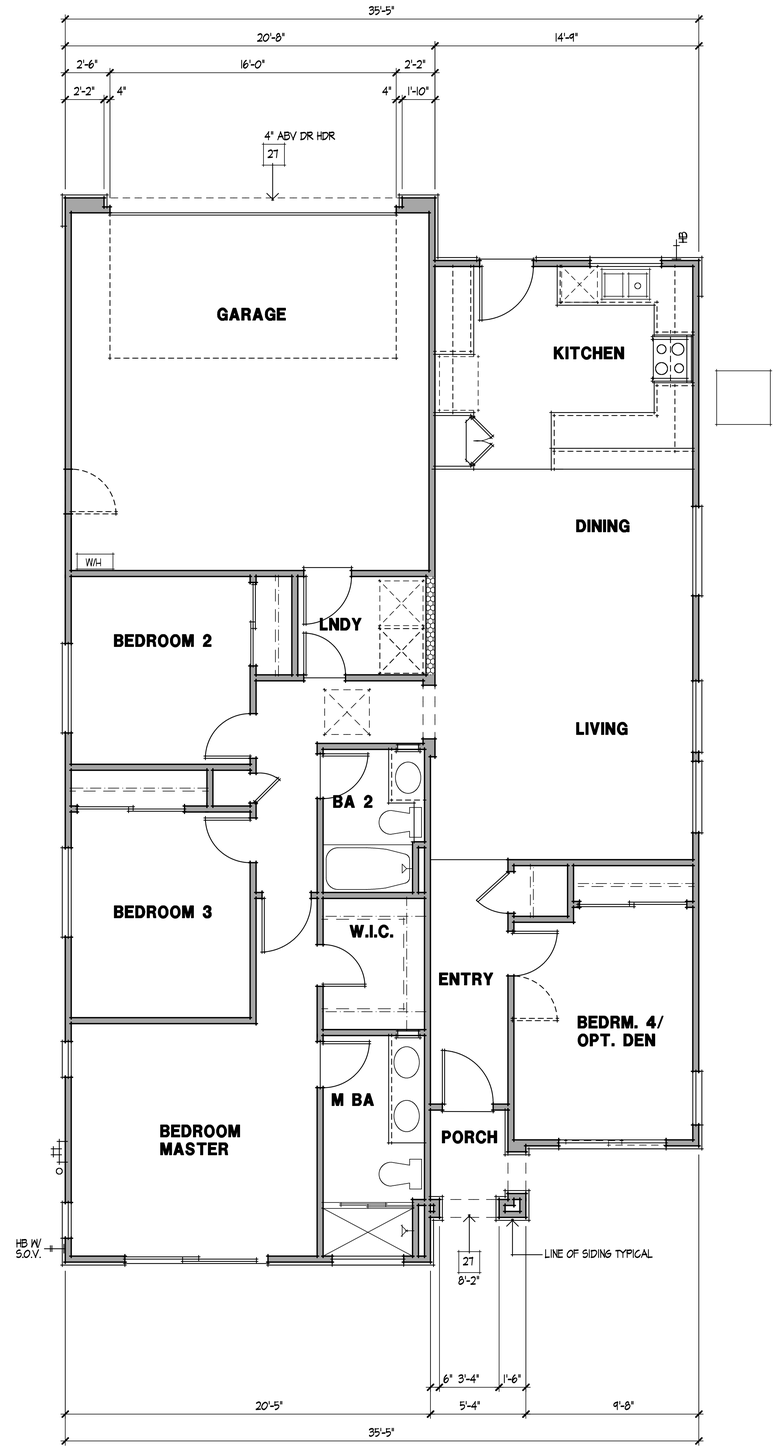

FLOOR PLAN ADDENDUM - C

SCALE: 1/4" = 1'-0"

KPI Inc.

KNITTER PARTNERS INTERNATIONAL, INC.
architecture & planning

1401 DOVE ST. SUITE 240
NEWPORT BEACH, CA 92660
PHONE: (949) 752-1177
FAX: (949) 752-0151
WWW.KNITTER.COM

©KNITTER PARTNERS INTERNATIONAL
ALL RIGHTS RESERVED 2013

THIS DOCUMENT IS THE PROPERTY AND COPYRIGHT OF KNITTER PARTNERS INTERNATIONAL, INC. AND SHALL NOT BE USE ON ANY OTHER WORK, BE REPRODUCED OR DISCLOSED TO OTHERS EXCEPT BY WRITTEN AUTHORIZATION FROM KNITTER PARTNERS INTERNATIONAL, INC.

NO.	DATE	REVISION
△		
△		
△		
△		
△		

IMAGINE DEVELOPMENT L.L.C.

THE COLONY 65
LANCASTER, CALIFORNIA

LICENSED ARCHITECT
MICHAEL J. KNITTER
C10524
REN. 4-30-19
STATE OF CALIFORNIA

PROJECT INFO
PLAN 2

JOB NUMBER **3036**
PROJECT MGR. RC
DRAWN BY AD
PLOT DATE: 3-6-2018

SHEET TITLE
FLOOR PLAN ADDENDA

SHEET NUMBER
2.2.1

PLOT TIME: 9:18 AM PATH\NAME: G:\0_KPI\2013\13036 COLONY 65 PLANS\PLAN 2\3036 21 PLAN 2 ADDENDA.DC5

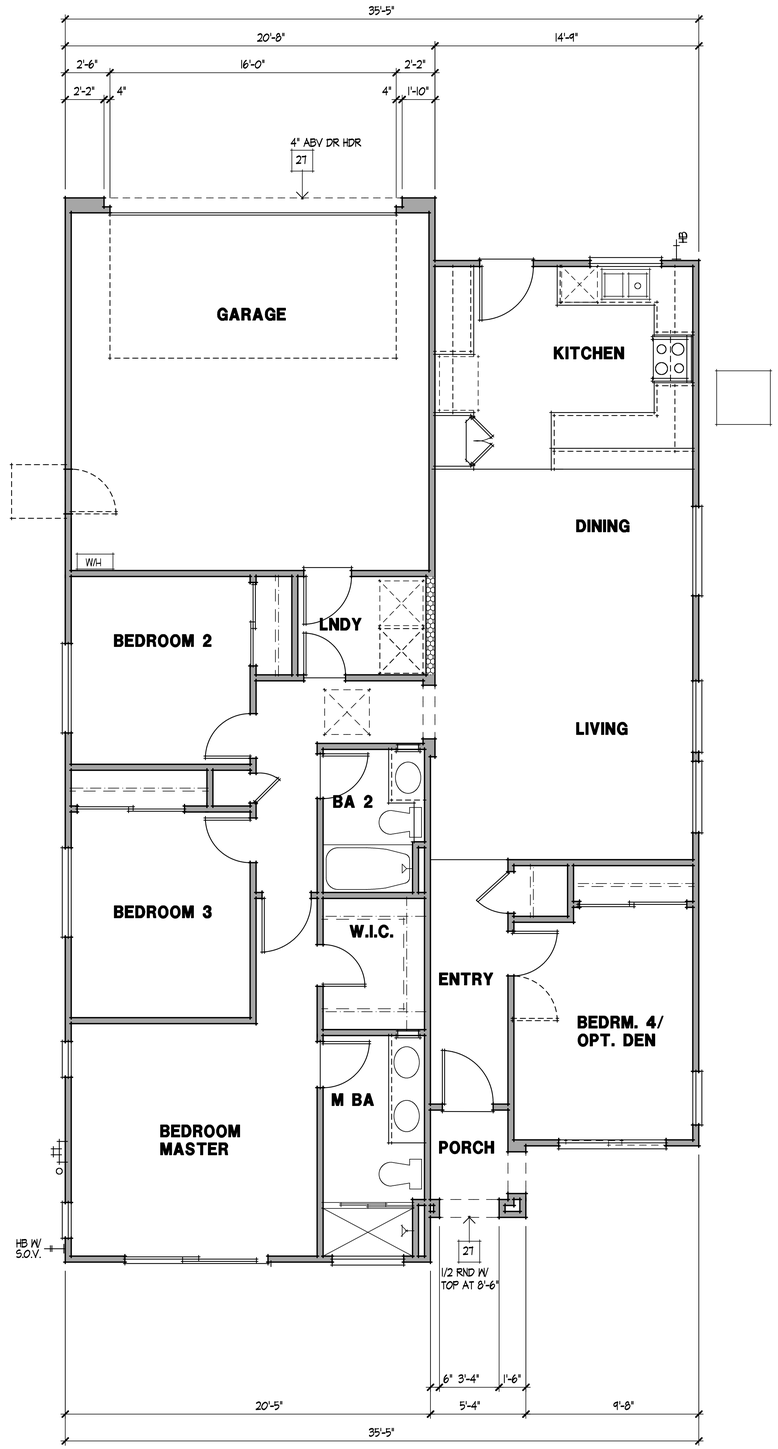

FLOOR PLAN ADDENDUM - D

SCALE: 1/4" = 1'-0"

PLOT TIME: 9:19 AM PATH\NAME: G:\0_KPI\2013\13036 COLONY 65 PLANS\PLAN 2\3036 21 PLAN 2 ADDENDUM D.DC5

KPI Inc.

KNITTER PARTNERS INTERNATIONAL, INC.
architecture & planning

1401 DOVE ST. SUITE 240
NEWPORT BEACH, CA 92660
PHONE: (949) 752-1177
FAX: (949) 752-0151
WWW.KNITTER.COM

©KNITTER PARTNERS INTERNATIONAL
ALL RIGHTS RESERVED 2013

THIS DOCUMENT IS THE PROPERTY AND COPYRIGHT OF KNITTER PARTNERS INTERNATIONAL, INC. AND SHALL NOT BE USE ON ANY OTHER WORK, BE REPRODUCED OR DISCLOSED TO OTHERS EXCEPT BY WRITTEN AUTHORIZATION FROM KNITTER PARTNERS INTERNATIONAL, INC.

NO.	DATE	REVISION
△		
△		
△		
△		
△		

IMAGINE DEVELOPMENT L.L.C.

THE COLONY 65
LANCASTER, CALIFORNIA

LICENSED ARCHITECT
MICHAEL J. KNITTER
C10524
REN. 4-30-19
STATE OF CALIFORNIA

PROJECT INFO
PLAN 2

JOB NUMBER **3036**
PROJECT MGR. RG
DRAWN BY AD
PLOT DATE: 3-6-2018

SHEET TITLE
FLOOR PLAN ADDENDUM

SHEET NUMBER
2.2.2

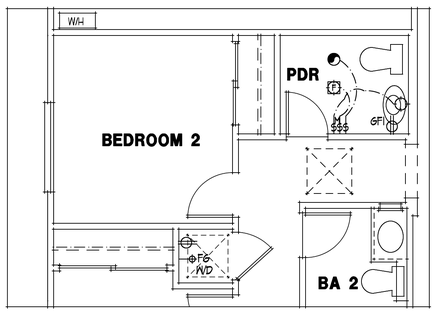

POWDER OPTION

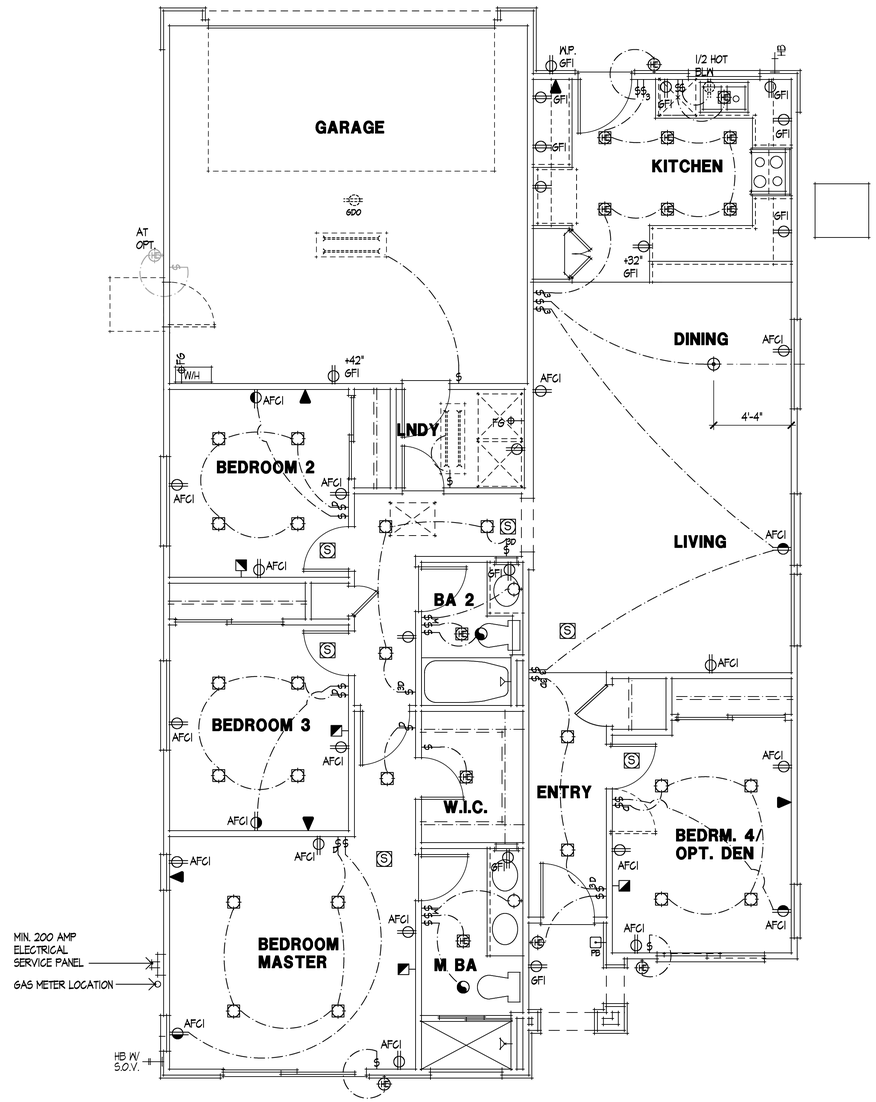

UTILITY PLAN - A

UTILITY SYMBOLS

	110 VOLT OUTLET AT +12" ABOVE FLOOR UNO
AFCI	110 VOLT OUTLET WITH ARC FAULT CIRCUIT INTERRUPTER AT +12" ABOVE FLOOR UNO
	110 VOLT OUTLET, SWITCH CONTROLLED 1/2 HOT
	110 VOLT OUTLET, WITHIN CABINET
220 V	220 VOLT OUTLET
220 V D	220 VOLT OUTLET WITH DISCONNECT
	110 VOLT FLOOR OUTLET WITH COVER
W.P. GFI	110 VOLT WATER PROOF OUTLET WITH GFI
	TWO POLE LIGHT SWITCH AT +36" ABOVE FLOOR, +8" ABOVE COUNTER
3	3 WAY LIGHT SWITCH
4	4 WAY LIGHT SWITCH
D	TWO POLE LIGHT SWITCH WITH DIMMER
M	TWO POLE LIGHT SWITCH WITH MOTION SENSOR
PB	DOOR CHIME PUSH BUTTON
	DOOR CHIME
T	THERMOSTAT, VERIFY LOCATION WITH HVAC DRAWING
	TELEPHONE OUTLET
	TELEVISION ANTENNA JACK
	SURFACE MOUNTED INCANDESCENT LIGHT FIXTURE
V.P.	VAPOR PROOF RECESSED INCANDESCENT FIXTURE
	HANGING INCANDESCENT LIGHT FIXTURE
	TRACK LIGHT FIXTURE
	EXHAUST FAN WITH LIGHT
	WALL MOUNTED INCANDESCENT LIGHT FIXTURE
	RECESSED INCANDESCENT LIGHT FIXTURE
	EXHAUST FAN WITH LIGHT, SWITCHED SEPARATELY
J	JUNCTION BOX WITH COVER OR ADAPTOR AS REQUIRED
	SURFACE MOUNTED FLUORESCENT LIGHT FIXTURE
	SURFACE MOUNTED HIGH EFFICACY LIGHT FIXTURE
	WALL MOUNTED HIGH EFFICACY LIGHT FIXTURE
	RECESSED HIGH EFFICACY LIGHT FIXTURE
	RECESSED EXHAUST FAN, SWITCH CONTROLLED
S	SMOKE DETECTOR, ICBO APPROVED, CEILING MOUNTED U.N.O.
SD	COMBINATION SMOKE/ CARBON MONOXIDE DETECTOR, ICBO APPROVED, CEILING MOUNTED U.N.O.
FG	FUEL GAS OUTLET
	FIREPLACE KEY VALVE (LOOSE)
HB	HOSE BIBB WITH NON-REMOVABLE TYPE BACK FLOW PREVENTION DEVICE
HBV	HOSE BIBB WITH SHUT-OFF VALVE AND NON-REMOVABLE TYPE BACK FLOW PREVENTION DEVICE
	ELECTRONIC SECURITY
	COMPUTER DATA LINE
ADD	ILLUMINATED ADDRESS FIXTURE-VISIBLE FROM STREET
PC	PHOTO CONTROL

ELECTRICAL NOTES

1. LIGHT FIXTURES IN CLOTHES CLOSET SHALL BE PLACED MINIMUM OF 12" AWAY FROM WALLS & MINIMUM OF 12" AWAY FROM CLOTHES PER CEC. ART. 410.8
2. PROVIDE "BROAN-MODEL SSQTXENI10" SMARTSENSE INTELLIGENT VENTILATION SYSTEM IN EACH BATHROOM (0.3 - 0.7 SONES). PROVIDE DEEP DEVICE ELECTRICAL BOXES AND 6" DUCT FOR SYSTEM. (TO COMPLY IN ASHRAE 62.2)
3. SMOKE DETECTOR PER CBC SEC. 907.2.
   - SHALL BE INSTALLED ON EACH FLOOR IN ACCORDANCE WITH MFR'S LISTING
   - SHALL BE MOUNTED ON THE CEILING OR WALL AT A CENTRAL POINT OR AREA GIVING ACCESS TO ROOMS USED FOR SLEEPING
   - SHALL BE INSTALLED IN CLOSE PROXIMITY TO THE STAIRS GIVING ACCESS TO ROOMS USED FOR SLEEPING
   - SHALL BE HARD WIRED, INSTALLED WITH A BATTERY BACKUP AND SHALL EMIT A SIGNAL WHEN BATTERY IS LOW
   - SHALL SOUND AN ALARM AUDIBLE IN ALL SLEEPING AREAS WITHIN A UNIT

3A. CARBON MONOXIDE ALARMS PER CRC SECTION R315:
   - SHALL BE INSTALLED OUTSIDE OF EACH SEPARATE DWELLING UNIT SLEEPING AREA IN THE IMMEDIATE VICINITY OF THE BEDROOM(S) AND AT EVERY LEVEL OF A DWELLING UNIT INCLUDING BASEMENT IN ACCORDANCE WITH MANUFACTURER'S LISTING
   - SHALL BE INSTALLED IN DWELLING UNITS AND IN SLEEPING UNITS WITH FUEL-BURNING APPLIANCES OR WITH ATTACHED GARAGES.
   - SHALL BE HARD WIRED, INSTALLED WITH A BATTERY BACKUP.
   - TWO OR MORE ALARMS SHALL BE INTERCONNECTED.
4. PROVIDE OUTLET AND LIGHTS IN ATTICS CONTAINING FAU'S
5. PROVIDE CONVENIENCE OUTLET IN EACH BATHROOM, POWDER AND LAUNDRY WITHIN 3 FT. OF BASIN EDGE, CEC ART. 210.52(D). SUCH OUTLETS SHALL BE APPROVED GROUND FAULT CIRCUIT PROTECTED (GFI.) CEC ART. 210.8(A)1. OUTLETS SHALL BE SUPPLIED BY A MINIMUM OF ONE 20-AMPERE BRANCH CIRCUIT. SUCH CIRCUITS SHALL HAVE NO OTHER OUTLETS. THIS CIRCUIT MAY SERVE MORE THAN ONE BATHROOM, CEC ART. 210.11(C)3.
6. PROVIDE AT LEAST ONE 125 VOLT SINGLE PHASE RECEPTACLE IN GARAGE & OUTDOORS, CEC ART. 210.52(G). THIS CIRCUIT SHALL BE GROUND FAULT CIRCUIT PROTECTED (GFI) & WATERPROOF WHEN EXTERIOR, CEC. ART. 210.8(A) 2, 3.
7. ALL KITCHEN 125VOLT SINGLE PHASE 15 & 20 AMP RECEPTACLES SERVING COUNTER TOP SURFACE SHALL BE GROUND FAULT CIRCUIT INTERRUPTED (GFI), CEC ART. 210.8(A) 6.
8. PERMANENTLY INSTALLED LUMINARIES IN KITCHENS SHALL BE HIGH EFFICACY LUMINARIES AND UP TO 50 PERCENT OF THE TOTAL RATED WATTAGES CAN BE NON HIGH EFFICACY LUMINARIES CONTROLLED WITH SEPARATE SWICH, PER ENERGY CODE SEC. 150(K)
9. PROVIDE 100 SQ. IN. OF MAKE UP AIR AT THE LAUNDRY ROOM. (TO REPLACE AIR BEING EXHAUSTED BY DRYER VENT AND EXHAUST FAN IF APPLICABLE), CMC SEC. 504.3.2.
10. FAMILY ROOMS, DINING ROOM, LIVING ROOMS, PARLORS, LIBRARIES, DENS, BEDROOMS, SUNROOMS, RECREATION ROOMS, CLOSETS, HALLWAYS, OR SIMILAR ROOMS OR AREAS, 15 & 20 AMP OUTLETS SHALL BE ARC FAULT CIRCUIT INTERRUPTED, COMBINATION TYPE AFCI REQUIRED PER CEC ART.210.12(B)
11. ALL EXHAUST FANS MUST BE SPECIFIED AT A NOISE RATING OF A MAXIMUM 1 "SONE" (FOR CONTINUOUS USE CALCULATION) OR 3 "SONE" (FOR INTERMITTENT USE CALCULATION)
12. PROVIDE HUMIDISTAT AT ALL FANS LOCATED IN ALL BATHROOMS WITH A BATHTUB, SHOWER OR TUB/SHOWER COMBINATION.

KPI INC.
KNITTER PARTNERS INTERNATIONAL, INC.
architecture & planning
1401 DOVE ST. SUITE 240
NEWPORT BEACH, CA 92660
PHONE: (949) 752-1177
FAX: (949) 752-0151
WWW.KNITTER.COM

©KNITTER PARTNERS INTERNATIONAL ALL RIGHTS RESERVED 2013

THIS DOCUMENT IS THE PROPERTY AND COPYRIGHT OF KNITTER PARTNERS INTERNATIONAL, INC. AND SHALL NOT BE USE ON ANY OTHER WORK, BE REPRODUCED OR DISCLOSED TO OTHERS EXCEPT BY WRITTEN AUTHORIZATION FROM KNITTER PARTNERS INTERNATIONAL, INC.

NO.	DATE	REVISION

IMAGINE DEVELOPMENT L.L.C.

THE COLONY 65
LANCASTER, CALIFORNIA

LICENSED ARCHITECT
MICHAEL J. KNITTER
C10524
REN. 4-30-19
STATE OF CALIFORNIA

PROJECT INFO
PLAN 2

JOB NUMBER **3036**
PROJECT MGR. RC
DRAWN BY AD
PLOT DATE: 3-6-2018

SHEET TITLE
UTILITY PLAN AND OPTION

SHEET NUMBER
2.3

PLOT TIME: 11:04 AM PATH\NAME: G:\0_KPI\2013\13036 COLONY 65 PLANS\PLAN 2\3036 20 PLAN 2.DC5

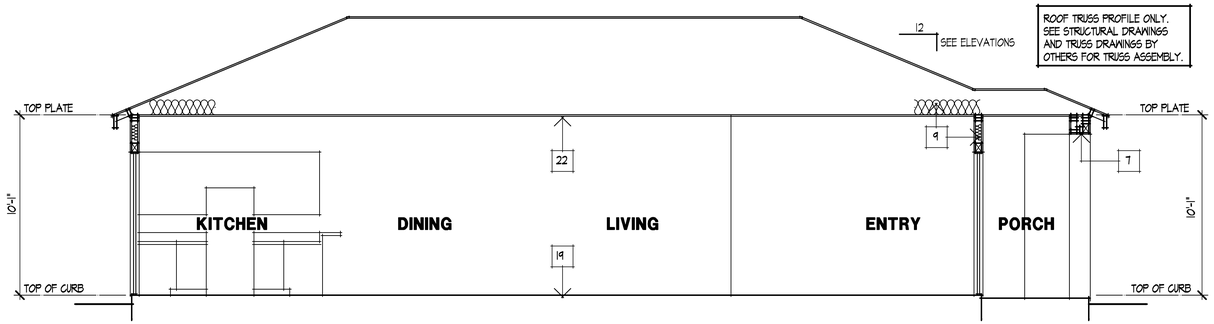

SECTION D

SCALE: 1/4" = 1'-0"

CONCRETE SLAB:
SEE STRUCTURAL DRAWINGS FOR
STRUCTURAL DESIGN

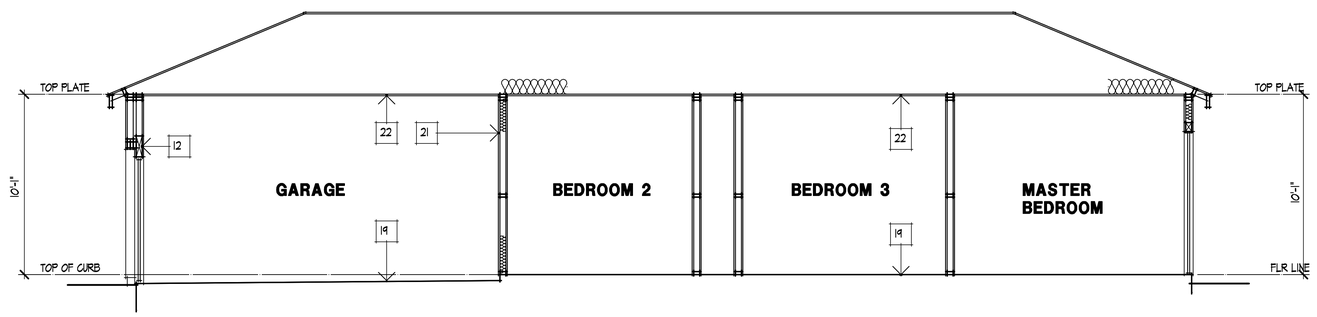

SECTION C

SCALE: 1/4" = 1'-0"

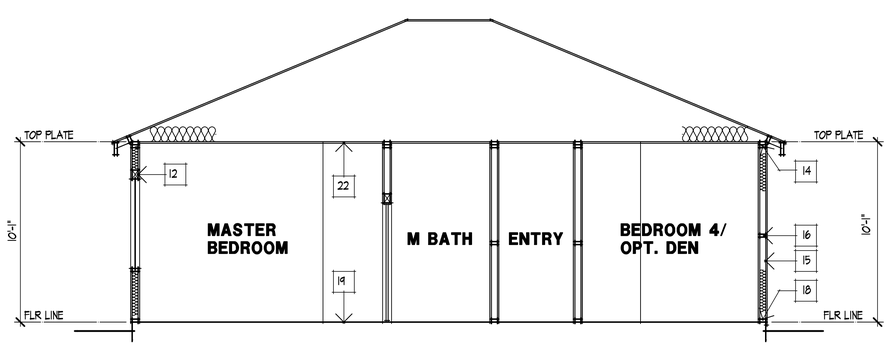

SECTION A

SCALE: 1/4" = 1'-0"

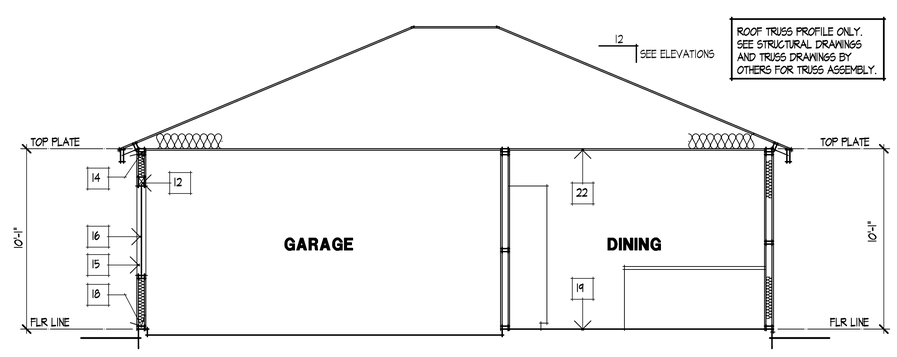

SECTION B

SCALE: 1/4" = 1'-0"

SECTION NOTES

1. ROOF MATERIAL (REFER TO ROOF NOTES)
2. ROOF SHEATHING (REFER TO FRAMING PLAN)
3. DESIGNED WOOD TRUSS PER MANUFACTURER (REFER TO TRUSS PLANS)
4. 2 X ROOF RAFTERS (REFER TO FRAMING PLAN)
5. FALSE 2X FRAMING AT 24" O.C.
6. EXTERIOR FINISH (REFER TO ELEVATION NOTES)
7. EXTERIOR SOFFIT (REFER TO ELEVATION NOTES)
8. 2 X CEILING JOISTS (REFER TO FRAMING PLAN)
9. INSULATION (REFER TO ENERGY COMPLIANCE SHEET)
10. FLUSH BEAM (REFER TO FRAMING PLAN)
11. DROP BEAM (REFER TO FRAMING PLAN)
12. HEADER (REFER TO FRAMING PLAN)
13. 2 X 4 FRAMING
14. CONTINUOUS DOUBLE 2X TOP PLATE
15. 2 X STUDS AT 16" O.C.
16. 2 X BLOCK AT MID-HEIGHT
17. 2 X CRIPPLE STUD AT 16" O.C.
18. 2 X P.T.D.F. SILL PLATE
19. CONCRETE SLAB (REFER TO STRUCTURAL FOUNDATION PLAN)
20. 1/2" GYPSUM BOARD
21. INTERIOR GARAGE FINSIH REFER TO SHEET GN3.
22. 5/8" GYPSUM BOARD AT MEMBERS SPACED GREATER THAN 24" O/C
23. SHELF (REFER TO FLOOR PLAN FOR HEIGHT)
24. SOFFIT (REFER TO FLOOR PLAN FOR HEIGHT)
25. 2 X SOLE PLATE
26. 2 X FLOOR JOISTS (REFER TO FRAMING PLAN)
27. FLOOR SHEATHING (REFER TO FRAMING PLAN)
28. HANDRAIL (REFER TO DETAIL)
29. GUARDRAIL (REFER TO DETAIL)
30. (3) 2 X 12 STAIR STRINGERS
31. 5/8" MIN. PLYWOOD TREAD AND RISERS
32. 2X "NAILED SPACED" DECKING
33. G.I. FLASHING (ROOF TO WALL)
34. RIP 2X DECK JOISTS FOR 1/4" PER FOOT SLOPE
35. ELASTOMERIC DECKING OVER PLYWOOD SUB FLOOR (INSTALLED TO MANUFACTURER'S SPECIFICATIONS)

KPI Inc.

KNITTER PARTNERS INTERNATIONAL, INC.
architecture & planning

1401 DOVE ST. SUITE 240
NEWPORT BEACH, CA 92660
PHONE: (949) 752-1177
FAX: (949) 752-0151
WWW.KNITTER.COM

©KNITTER PARTNERS INTERNATIONAL
ALL RIGHTS RESERVED 2013

THIS DOCUMENT IS THE PROPERTY AND COPYRIGHT OF KNITTER PARTNERS INTERNATIONAL, INC. AND SHALL NOT BE USE ON ANY OTHER WORK, BE REPRODUCED OR DISCLOSED TO OTHERS EXCEPT BY WRITTEN AUTHORIZATION FROM KNITTER PARTNERS INTERNATIONAL, INC.

NO.	DATE	REVISION
△		
△		
△		
△		
△		

IMAGINE DEVELOPMENT L.L.C.

THE COLONY 65
LANCASTER, CALIFORNIA

LICENSED ARCHITECT
MICHAEL J. KNITTER
C10524
REN. 4-30-19
STATE OF CALIFORNIA

PROJECT INFO

PLAN 2

JOB NUMBER **3036**
PROJECT MGR. RC
DRAWN BY AD
PLOT DATE: 3-6-2018

SHEET TITLE

SECTION A, B, C & D

SHEET NUMBER

2.4

PLOT TIME: 9:20 AM PATH\NAME: G:\0_KPI\2013\13036 COLONY 65 PLANS\PLAN 2\3036 22 SECTION 2.DC5

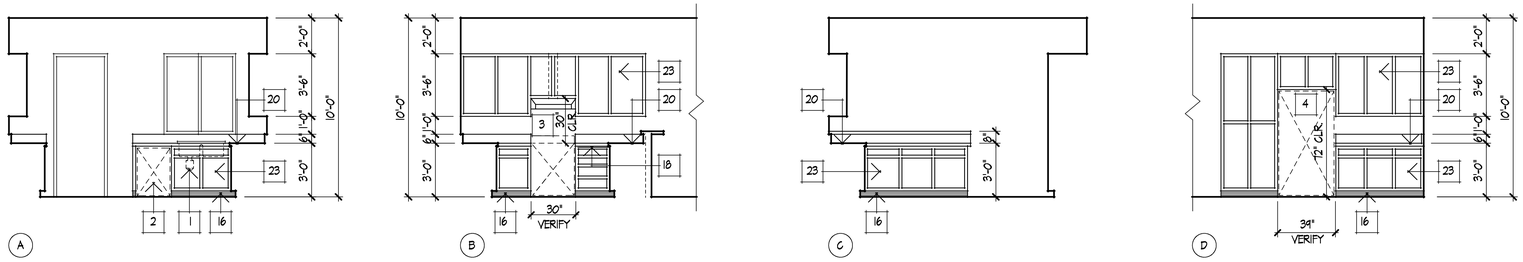

KITCHEN

SCALE: 1/4"= 1'-0"

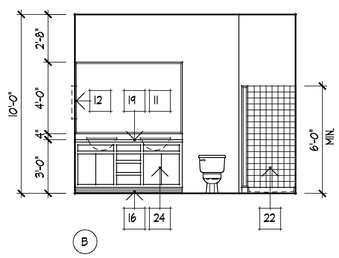

M BATH

SCALE: 1/4"= 1'-0"

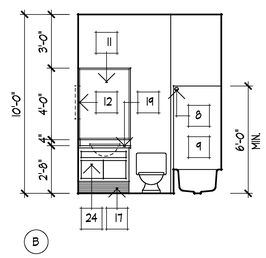

BATH 2

SCALE: 1/4"= 1'-0"

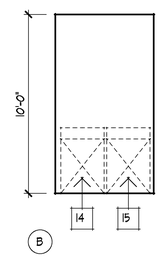

LAUNDRY

SCALE: 1/4"= 1'-0"

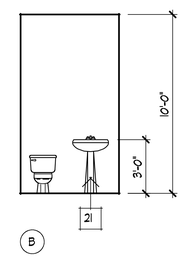

OPT. POWDER

REPLACE LAUNDRY ROOM SCALE: 1/4"= 1'-0"

INTERIOR NOTES

1. DOUBLE SINK WITH GARBAGE DISPOSAL
2. BUILT-IN DISHWASHER WITH AIR GAP
3. DROP-IN COOK-TOP WITH EXHAUST HOOD AND MICROWAVE ABOVE AND SLIDE-IN CONVENTIONAL OVEN BELOW (VENT TO OUTSIDE AIR. VERIFY DIMENSIONS WITH MANUFACTURER'S SPEC.'S) (MAINTAIN 30" CLEAR ABOVE RANGE OR COOKTOP TO UNPROTECTED NONCOMBUSTIBLES OR 24" CLEAR TO METAL VENTILATING HOOD.
4. PROVIDE 34" REFRIGERATOR SPACE AND PLUMBING RECESSED IN WALL FOR ICE MAKERS
5. 30" WIDE COMBINATION MICROWAVE ABOVE CONVENTIONAL OVEN (VERIFY DIMENSIONS WITH MANUFACTURER SPEC.'S)
6. PANTRY WITH ADJUSTABLE SHELVES
7. BUILT-IN TRASH COMPACTOR
8. SHOWER CURTAIN ROD
9. 32" X 60" TUB WITH SHOWER
10. 42" X 60" OVAL TUB
11. MIRROR
12. RECESSED MEDICINE CABINET
13. TEMPERED SHOWER ENCLOSURE
14. WASHER SPACE
15. DRYER SPACE
16. 4" TOESPACE
17. 8" TOESPACE
18. CUTTING BOARD
19. SYNTHETIC COUNTERTOP AND SPLASH
20. CERAMIC TILE COUNTERTOP AND SPLASH
21. PEDESTAL SINK
22. WAINSCOT TO 72"
23. STAIN GRADE FINISH
24. PAINT GRADE FINISH
25. LAUNDRY SINK
26. DRYWALL SHELF
27. DRYWALL SOFFIT
28. VEGETABLE SINK
29. WOOD TOP

KPI Inc.

KNITTER PARTNERS INTERNATIONAL, INC.
architecture & planning

1401 DOVE ST. SUITE 240
NEWPORT BEACH, CA 92660
PHONE: (949) 752-1177
FAX: (949) 752-0151
WWW.KNITTER.COM

©KNITTER PARTNERS INTERNATIONAL
ALL RIGHTS RESERVED 2013

THIS DOCUMENT IS THE PROPERTY AND COPYRIGHT OF KNITTER PARTNERS INTERNATIONAL, INC. AND SHALL NOT BE USE ON ANY OTHER WORK, BE REPRODUCED OR DISCLOSED TO OTHERS EXCEPT BY WRITTEN AUTHORIZATION FROM KNITTER PARTNERS INTERNATIONAL, INC.

NO.	DATE	REVISION
△		
△		
△		
△		
△		

IMAGINE DEVELOPMENT L.L.C.

THE COLONY 65
LANCASTER, CALIFORNIA

LICENSED ARCHITECT
MICHAEL J. KNITTER
C10524
REN. 4-30-19
STATE OF CALIFORNIA

PROJECT INFO

PLAN 2

JOB NUMBER **3036**
PROJECT MGR. RC
DRAWN BY AD
PLOT DATE: 3-6-2018

SHEET TITLE

INTERIOR ELEVATIONS

SHEET NUMBER

2.5

PLOT TIME: 9:20 AM PATH\NAME: G:\0_KPI\2013\13036 COLONY 65 PLANS\PLAN 2\3036 22 SECTION 2.DC5

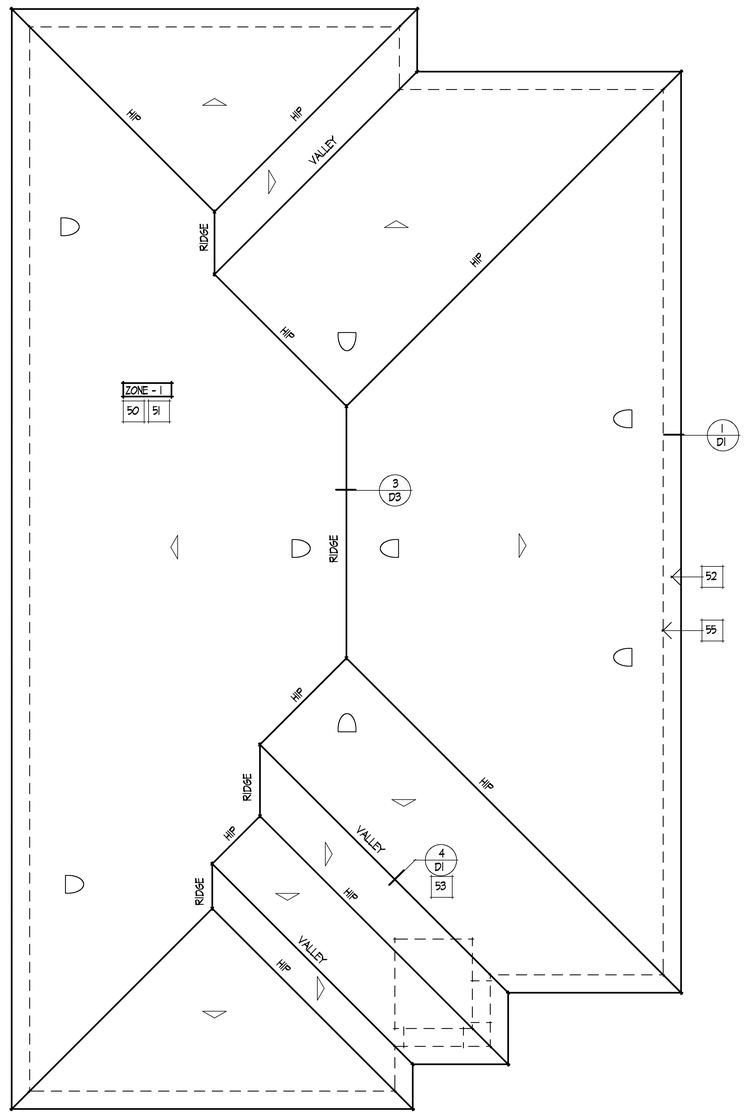

ROOF PLAN - A

SCALE: 1/4" = 1'-0"

ROOF NOTES

50. ROOF SLOPES: 5:12
51. ROOF MATERIAL: CONC 'S' TILE

ROOF COVERING: MFR.: MONIER "LIFETILE" ICBO #2656 OR APPROVED EQUAL. ROOF MATERIAL SHALL BE CLASS 'A' FIRE RETARDENT.

52. ALL EAVES AND RAKES SHALL BE 12" O.H., U.N.O.
53. PROVIDE G.I. VALLEY FLASHING AT ALL ROOF VALLEYS
54. PROVIDE SADDLE AND FLASHING AT CHIMNEY CHASE, TYPICAL
55. LINE OF STRUCTURE

ATTIC VENT CALCULATIONS

THE ATTIC VENTILATION CALCULATIONS PER CRC SECTION R806.2 AS FOLLOWS:

(A) ATTIC AREA (SQUARE FEET).

(B) DIVIDE (A) BY 150 *(300 IF VAPOR RETARDER IS PROVIDED AT WARM SIDE PER. CRC. SEC. R806.2) AND MULTIPLY BY 144 TO CALCULATE THE TOTAL REQUIRED NET FREE VENTING AREA IN SQUARE INCHES.
SEE GENERAL NOTE DIVISION 6, SECTION A.

(C) TOTAL SQUARE INCHES OF NET FREE VENTILATING AREA PROVIDED BY GABLE END VENTS.

(D) TOTAL SQUARE INCHES OF NET FREE VENTILATING AREA PROVIDED BY ROOF VENTILATORS.

(E) TOTAL SQUARE INCHES OF NET FREE VENTILATING AREA PROVIDED BY UNDER EAVE VENTS BLOCKING.

PLAN "2A"	A ATTIC AREA	B REQUIRED VENTING	C GABLE END VENTS	D ROOF VENTS	E EAVE VENTS
ZONE-1	1980 FT²	950 IN.²	0 IN.²	480 HIGH 480 LOW IN.²	0 IN.²
ZONE-2	FT²	IN.²	IN.²	HIGH LOW IN.²	IN.²
ZONE-3	FT²	IN.²	IN.²	HIGH LOW IN.²	IN.²
ZONE-4	FT²	IN.²	IN.²	HIGH LOW IN.²	IN.²

NOTES:
ALL VENT OPENINGS SHALL BE COVERED W/ 1/4" CORROSIVE RESISTANT METAL MESH.

FRAMER SHALL BE RESPONSIBLE FOR COORDINATING W/ TRUSS MFR TO ACCOMMODATE ALL ATTIC VENTS

ALL VENTS SHALL BE INSTALLED SO AS TO MAKE THEM WATER-PROOF AND WALL MOUNTED LOUVERS SHALL BE SEALED AND FLASHED WITH "MOISTOP" IN THE SAME MANNER PRESCRIBED FOR WINDOW INSTALLATION.

PROVIDE APPROVED INSULATION DAMS (BAFFLES) WHERE VENT BLOCKS ARE USED BETWEEN ROOF FRAMING MEMBERS TO PREVENT VENT HOLES BEING BLOCKED BY INSULATION.

ATTIC VENTS

(1) DV24A DORMER VENT PROVIDES 120 SQ. IN. OF FREE FLOW AIR MOVEMENT

(1) L 1424 14" X 24" ATTIC VENT PROVIDES 168 SQ. IN. OF FREE FLOW AIR MOVEMENT

(1) L 1418 14" X 18" ATTIC VENT PROVIDES 126 SQ. IN. OF FREE FLOW AIR MOVEMENT

(1) L 1412 14" X 12" ATTIC VENT PROVIDES 84 SQ. IN. OF FREE FLOW AIR MOVEMENT

(1) L 149 14" X 9" ATTIC VENT PROVIDES 63 SQ. IN. OF FREE FLOW AIR MOVEMENT

(1) O'HAGIN CLOAKED VENT TILE PROVIDES 95 SQ. IN. OF FREE FLOW AIR MOVEMENT

(1) VENT BLOCK PROVIDES 10 SQ. IN. OF FREE FLOW AIR MOVEMENT
(1) VENT BLOCK EVERY THIRD BAY

KPI INC.
KNITTER PARTNERS INTERNATIONAL, INC.
architecture & planning

1401 DOVE ST. SUITE 240
NEWPORT BEACH, CA 92660
PHONE: (949) 752-1177
FAX: (949) 752-0151
WWW.KNITTER.COM

©KNITTER PARTNERS INTERNATIONAL
ALL RIGHTS RESERVED 2013

THIS DOCUMENT IS THE PROPERTY AND COPYRIGHT OF KNITTER PARTNERS INTERNATIONAL, INC. AND SHALL NOT BE USE ON ANY OTHER WORK, BE REPRODUCED OR DISCLOSED TO OTHERS EXCEPT BY WRITTEN AUTHORIZATION FROM KNITTER PARTNERS INTERNATIONAL, INC.

NO.	DATE	REVISION

IMAGINE DEVELOPMENT L.L.C.

THE COLONY 65
LANCASTER, CALIFORNIA

LICENSED ARCHITECT
MICHAEL J. KNITTER
C10524
REN. 4-30-19
STATE OF CALIFORNIA

PROJECT INFO
PLAN 2

JOB NUMBER **3036**
PROJECT MGR. RC
DRAWN BY AD
PLOT DATE: 3-6-2018

SHEET TITLE
ROOF PLAN A

SHEET NUMBER
2.6

PLOT TIME: 11:04 AM PATH\NAME: G:\O_KPI\2013\13036 COLONY 65 PLANS\PLAN 2\3036 2D PLAN 2.DC5

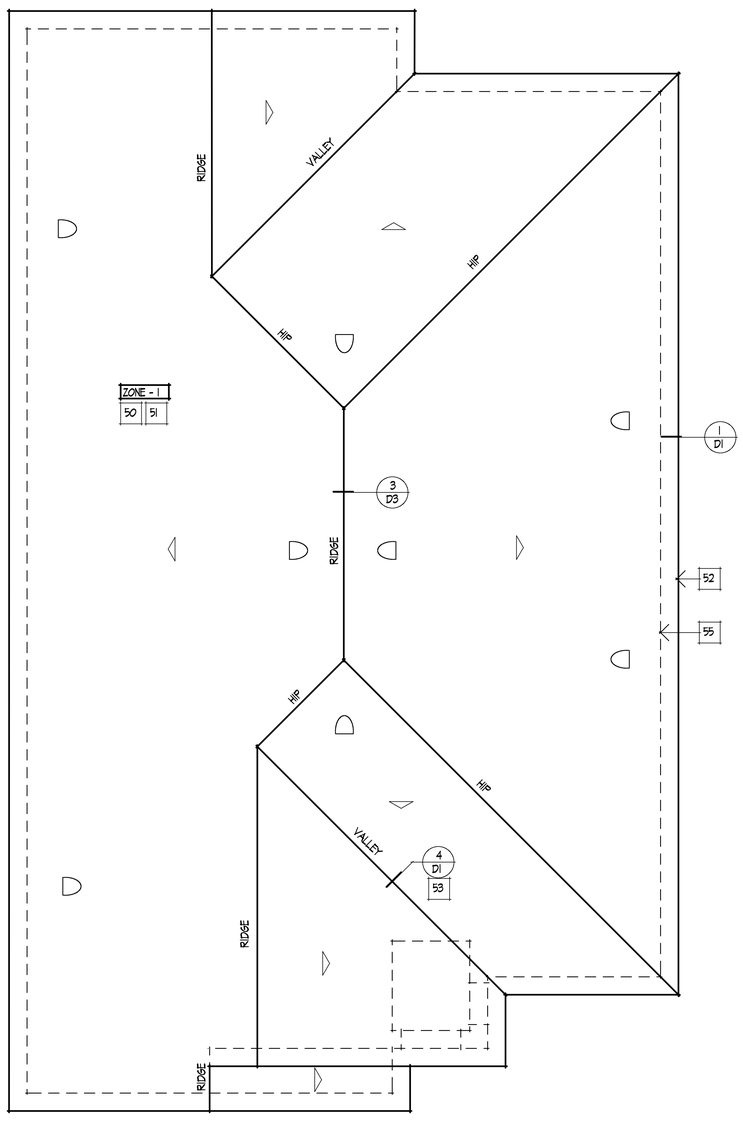

ROOF PLAN - B

SCALE: 1/4" = 1'-0"

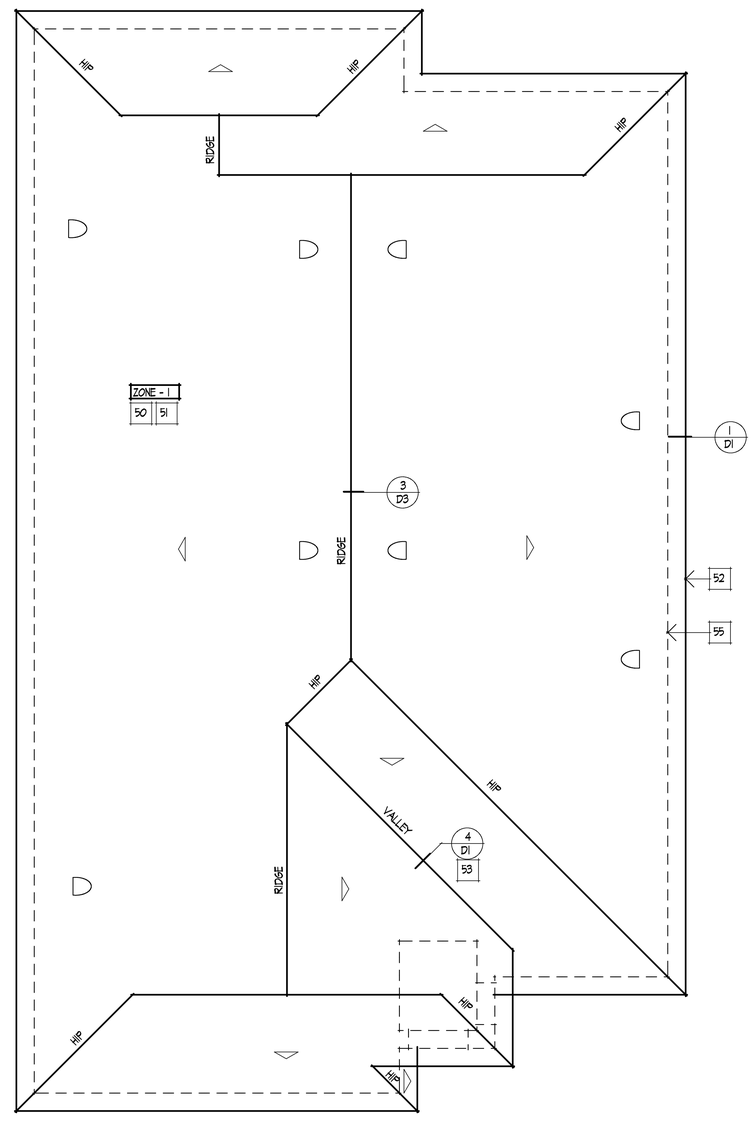

ROOF PLAN - C

SCALE: 1/4" = 1'-0"

ROOF NOTES

50. ROOF SLOPES: 5:12
51. ROOF MATERIAL: CONC 'FLAT' TILE

ROOF COVERING: MFR.: MONIER "LIFETILE" ICBO #2656 OR APPROVED EQUAL. ROOF MATERIAL SHALL BE CLASS 'A' FIRE RETARDENT.

52. ALL EAVES AND RAKES SHALL BE 12" O.H., U.N.O.
53. PROVIDE G.I. VALLEY FLASHING AT ALL ROOF VALLEYS
54. PROVIDE SADDLE AND FLASHING AT CHIMNEY CHASE, TYPICAL
55. LINE OF STRUCTURE

ATTIC VENT CALCULATIONS

THE ATTIC VENTILATION CALCULATIONS PER CRC SECTION R806.2 AS FOLLOWS:

(A) ATTIC AREA (SQUARE FEET).

(B) DIVIDE (A) BY 150 *(300 IF VAPOR RETARDER IS PROVIDED AT WARM SIDE PER. CRC. SEC. R806.2) AND MULTIPLY BY 144 TO CALCULATE THE TOTAL REQUIRED NET FREE VENTING AREA IN SQUARE INCHES.
SEE GENERAL NOTE DIVISION 6, SECTION A.

(C) TOTAL SQUARE INCHES OF NET FREE VENTILATING AREA PROVIDED BY GABLE END VENTS.

(D) TOTAL SQUARE INCHES OF NET FREE VENTILATING AREA PROVIDED BY ROOF VENTILATORS.

(E) TOTAL SQUARE INCHES OF NET FREE VENTILATING AREA PROVIDED BY UNDER EAVE VENTS BLOCKING.

PLAN "2B" & "2C"	A ATTIC AREA	B REQUIRED VENTING	C GABLE END VENTS	D ROOF VENTS	E EAVE VENTS
ZONE-1	1980 FT.²	950 IN.²	0 IN.²	480 HIGH 480 LOW IN.²	0 IN.²
ZONE-2	FT.²	IN.²	IN.²	HIGH LOW IN.²	IN.²
ZONE-3	FT.²	IN.²	IN.²	HIGH LOW IN.²	IN.²
ZONE-4	FT.²	IN.²	IN.²	HIGH LOW IN.²	IN.²

NOTES:
ALL VENT OPENINGS SHALL BE COVERED W/ 1/4" CORROSIVE RESISTANT METAL MESH.

FRAMER SHALL BE RESPONSIBLE FOR COORDINATING W/ TRUSS MFR TO ACCOMMODATE ALL ATTIC VENTS

ALL VENTS SHALL BE INSTALLED SO AS TO MAKE THEM WATER-PROOF AND WALL MOUNTED. LOUVERS SHALL BE SEALED AND FLASHED WITH "MOISTOP" IN THE SAME MANNER PRESCRIBED FOR WINDOW INSTALLATION.

PROVIDE APPROVED INSULATION DAMS (BAFFLES) WHERE VENT BLOCKS ARE USED BETWEEN ROOF FRAMING MEMBERS TO PREVENT VENT HOLES BEING BLOCKED BY INSULATION.

ATTIC VENTS

- (1) DV24A DORMER VENT PROVIDES 120 SQ. IN. OF FREE FLOW AIR MOVEMENT
- (1) L 1424 14" X 24" ATTIC VENT PROVIDES 168 SQ. IN. OF FREE FLOW AIR MOVEMENT
- (1) L 1418 14" X 18" ATTIC VENT PROVIDES 126 SQ. IN. OF FREE FLOW AIR MOVEMENT
- (1) L 1412 14" X 12" ATTIC VENT PROVIDES 84 SQ. IN. OF FREE FLOW AIR MOVEMENT
- (1) L 149 14" X 9" ATTIC VENT PROVIDES 63 SQ. IN. OF FREE FLOW AIR MOVEMENT
- (1) O'HAGIN CLOAKED VENT TILE PROVIDES 95 SQ. IN. OF FREE FLOW AIR MOVEMENT
- (1) VENT BLOCK PROVIDES 10 SQ. IN. OF FREE FLOW AIR MOVEMENT (1) VENT BLOCK EVERY THIRD BAY

KPI INC.
KNITTER PARTNERS INTERNATIONAL, INC.
architecture & planning

1401 DOVE ST. SUITE 240
NEWPORT BEACH, CA 92660
PHONE: (949) 752-1177
FAX: (949) 752-0151
WWW.KNITTER.COM

©KNITTER PARTNERS INTERNATIONAL
ALL RIGHTS RESERVED 2013

THIS DOCUMENT IS THE PROPERTY AND COPYRIGHT OF KNITTER PARTNERS INTERNATIONAL, INC. AND SHALL NOT BE USE ON ANY OTHER WORK, BE REPRODUCED OR DISCLOSED TO OTHERS EXCEPT BY WRITTEN AUTHORIZATION FROM KNITTER PARTNERS INTERNATIONAL, INC.

NO.	DATE	REVISION
△		
△		
△		
△		
△		

IMAGINE DEVELOPMENT L.L.C.

THE COLONY 65
LANCASTER, CALIFORNIA

LICENSED ARCHITECT
MICHAEL J. KNITTER
C10524
REN. 4-30-19
STATE OF CALIFORNIA

PROJECT INFO
PLAN 2

JOB NUMBER **3036**
PROJECT MGR. RG
DRAWN BY AD
PLOT DATE: 3-6-2018

SHEET TITLE
ROOF PLAN B & C

SHEET NUMBER
2.6.1

PLOT TIME: 9:18 AM PATH\NAME: G:\0_KPI\2013\13036 COLONY 65 PLANS\PLAN 2\3036 21 PLAN 2 ADDENDA.DC5

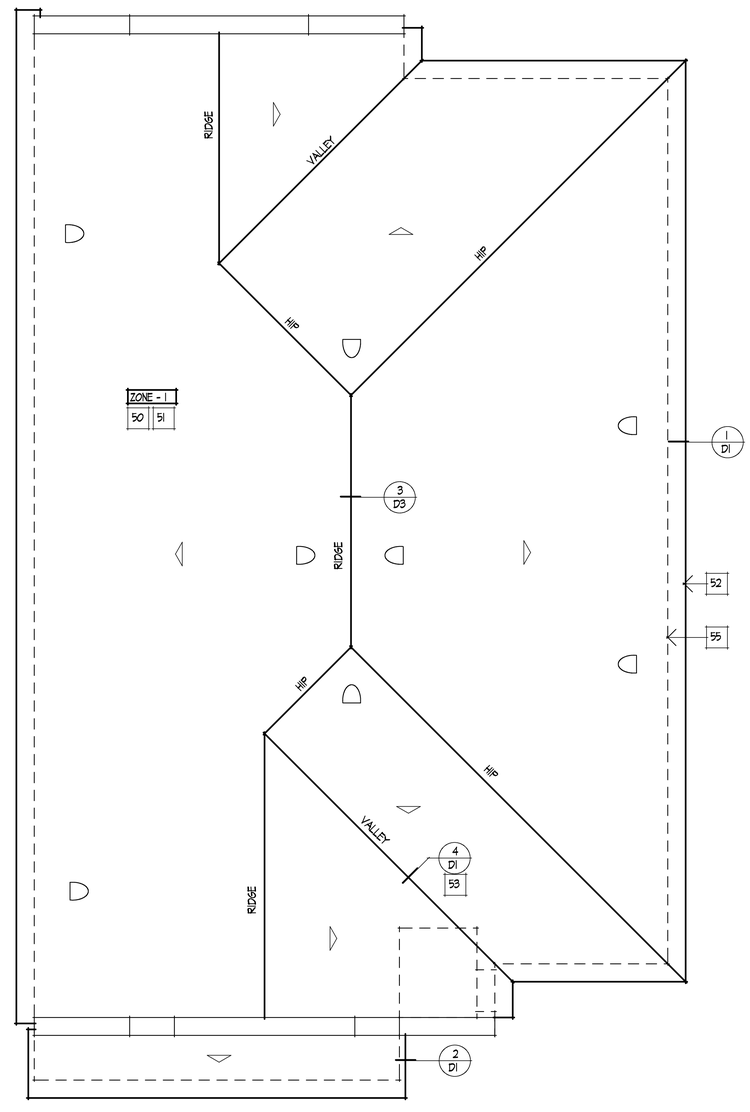

ROOF PLAN - D

SCALE: 1/4" = 1'-0"

ROOF NOTES

50. ROOF SLOPES: 5:12
51. ROOF MATERIAL: CONC 'S' TILE

ROOF COVERING: MFR.: MONIER "LIFETILE" ICBO #2656 OR APPROVED EQUAL. ROOF MATERIAL SHALL BE CLASS 'A' FIRE RETARDENT.

52. ALL EAVES AND RAKES SHALL BE 12" O.H., U.N.O.
53. PROVIDE G.I. VALLEY FLASHING AT ALL ROOF VALLEYS
54. PROVIDE SADDLE AND FLASHING AT CHIMNEY CHASE, TYPICAL
55. LINE OF STRUCTURE

ATTIC VENT CALCULATIONS

THE ATTIC VENTILATION CALCULATIONS PER CRC SECTION R806.2 AS FOLLOWS.

(A) ATTIC AREA (SQUARE FEET).

(B) DIVIDE (A) BY 150 *(300 IF VAPOR RETARDER IS PROVIDED AT WARM SIDE PER. CRC. SEC. R806.2) AND MULTIPLY BY 144 TO CALCULATE THE TOTAL REQUIRED NET FREE VENTING AREA IN SQUARE INCHES.
SEE GENERAL NOTE DIVISION 6, SECTION A.

(C) TOTAL SQUARE INCHES OF NET FREE VENTILATING AREA PROVIDED BY GABLE END VENTS.

(D) TOTAL SQUARE INCHES OF NET FREE VENTILATING AREA PROVIDED BY ROOF VENTILATORS.

(E) TOTAL SQUARE INCHES OF NET FREE VENTILATING AREA PROVIDED BY UNDER EAVE VENTS BLOCKING.

PLAN "2D"	A ATTIC AREA	B REQUIRED VENTING	C GABLE END VENTS	D ROOF VENTS	E EAVE VENTS
ZONE-1	1980 FT²	950 IN.²	0 IN.²	480 HIGH 480 LOW IN.²	0 IN.²
ZONE-2	FT²	IN.²	IN.²	HIGH LOW IN.²	IN.²
ZONE-3	FT²	IN.²	IN.²	HIGH LOW IN.²	IN.²
ZONE-4	FT²	IN.²	IN.²	HIGH LOW IN.²	IN.²

NOTES:
ALL VENT OPENINGS SHALL BE COVERED W/ 1/4" CORROSIVE RESISTANT METAL MESH.

FRAMER SHALL BE RESPONSIBLE FOR COORDINATING W/ TRUSS MFR TO ACCOMMODATE ALL ATTIC VENTS

ALL VENTS SHALL BE INSTALLED SO AS TO MAKE THEM WATER-PROOF AND WALL MOUNTED LOUVERS SHALL BE SEALED AND FLASHED WITH "MOISTOP" IN THE SAME MANNER PRESCRIBED FOR WINDOW INSTALLATION.

PROVIDE APPROVED INSULATION DAMS (BAFFLES) WHERE VENT BLOCKS ARE USED BETWEEN ROOF FRAMING MEMBERS TO PREVENT VENT HOLES BEING BLOCKED BY INSULATION.

ATTIC VENTS

(1) DV24A DORMER VENT PROVIDES 120 SQ. IN. OF FREE FLOW AIR MOVEMENT

(1) L 1424 14" X 24" ATTIC VENT PROVIDES 168 SQ. IN. OF FREE FLOW AIR MOVEMENT

(1) L 1418 14" X 18" ATTIC VENT PROVIDES 126 SQ. IN. OF FREE FLOW AIR MOVEMENT

(1) L 1412 14" X 12" ATTIC VENT PROVIDES 84 SQ. IN. OF FREE FLOW AIR MOVEMENT

(1) L 149 14" X 9" ATTIC VENT PROVIDES 63 SQ. IN. OF FREE FLOW AIR MOVEMENT

(1) O'HAGIN CLOAKED VENT TILE PROVIDES 95 SQ. IN. OF FREE FLOW AIR MOVEMENT

(1) VENT BLOCK PROVIDES 10 SQ. IN. OF FREE FLOW AIR MOVEMENT
(1) VENT BLOCK EVERY THIRD BAY

KPI INC.
KNITTER PARTNERS INTERNATIONAL, INC.
architecture & planning

1401 DOVE ST. SUITE 240
NEWPORT BEACH, CA 92660
PHONE: (949) 752-1177
FAX: (949) 752-0151
WWW.KNITTER.COM

©KNITTER PARTNERS INTERNATIONAL
ALL RIGHTS RESERVED 2013

THIS DOCUMENT IS THE PROPERTY AND COPYRIGHT OF KNITTER PARTNERS INTERNATIONAL, INC. AND SHALL NOT BE USE ON ANY OTHER WORK, BE REPRODUCED OR DISCLOSED TO OTHERS EXCEPT BY WRITTEN AUTHORIZATION FROM KNITTER PARTNERS INTERNATIONAL, INC.

NO.	DATE	REVISION

IMAGINE DEVELOPMENT L.L.C.

THE COLONY 65
LANCASTER, CALIFORNIA

LICENSED ARCHITECT
MICHAEL J. KNITTER
C10524
REN. 4-30-19
STATE OF CALIFORNIA

PROJECT INFO
PLAN 2

JOB NUMBER **3036**
PROJECT MGR. RC
DRAWN BY AD
PLOT DATE: 3-6-2018

SHEET TITLE
ROOF PLAN D

SHEET NUMBER
2.6.2

PLOT TIME: 9:19 AM PATH\NAME: G:\O_KPI\2013\13036 COLONY 65 PLANS\PLAN 2\3036 21 PLAN 2 ADDENDUM D.DC5

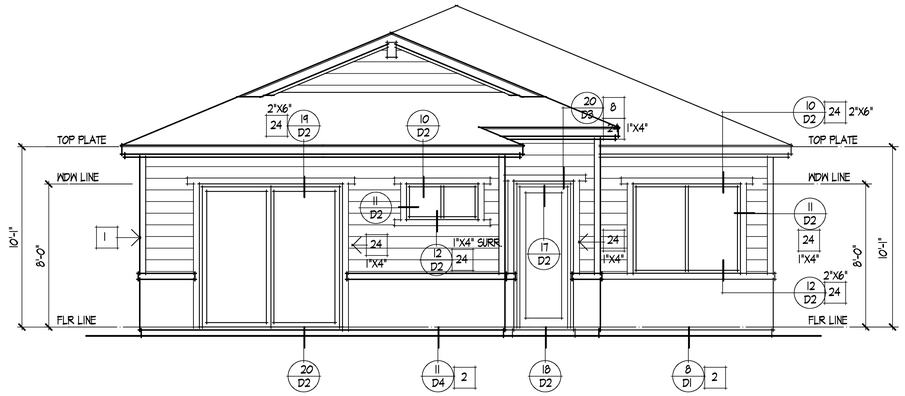

FRONT A

SCALE: 1/4" = 1'-0"

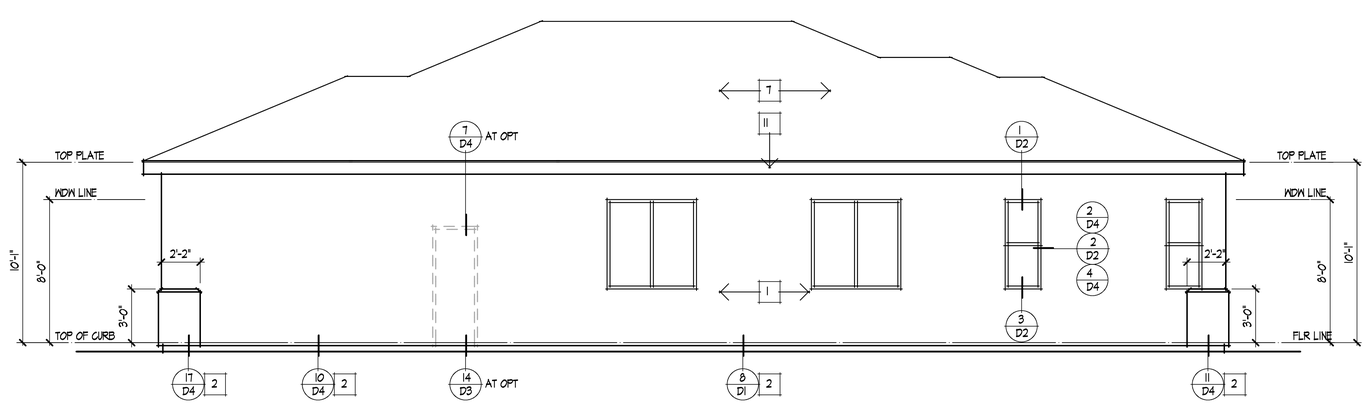

LEFT A

SCALE: 1/4" = 1'-0"

ELEVATION NOTES

1. 7/8" STUCCO (REFER TO GENERAL NOTES)
2. CONTINUOUS G.I. STUCCO SCREED (REFER TO DETAIL)
3. APPROVED SPARK ARRESTER BY FIREPLACE MFR.
4. G.I. SADDLE AND FLASHING
5. G.I. CHIMNEY CAP BY FIREPLACE MFR.
6. G.I. FLASHING
7. ROOF MATERIAL (REFER TO ROOF NOTES)
8. STUCCO SOFFIT O/ METAL LATH O/ BUILDING PAPER
9. ATTIC VENT (REFER TO ATTIC VENT CALCS)
10. 3X6 RAFTER TAILS
11. RE/S FASCIA OR BARGE BOARD, SEE ELEVATIONS FOR SIZE.
12. RE/S TRIM. SEE ELEVATIONS FOR SIZE.
13. STUCCO OVER 2X TRIM
14. POT SHELF (REFER TO DETAIL)
15. LINE OF CEILING
16. LINE OF SHELF
17. LINE OF ROOF ABOVE
18. DECORATIVE FOAM PIPE
19. TYPICAL EXTERIOR SIDING
20. DECORATIVE TILE
21. WOOD SHUTTERS (NON ACTIVE)
22. WOOD CORBEL
23. STUCCO RECESS
24. FINISH COAT OVER FOAM TRIM. (REFER TO DETAIL)
25. ELDORADO STONE (ER-602) OR APPROVED EQUAL
26. WOOD OUTLOOKER
27. SECTIONAL GARAGE DOOR
28. WOOD RAIL OR W.I. RAIL (REFER TO DETAIL)
29. EXTERIOR GRADE PLYWOOD SOFFIT
30. 14" X 18" G.I. SCREENED AND LOUVERED COMBUSTION AIR VENT

KPI Inc.
KNITTER PARTNERS INTERNATIONAL, INC.
architecture & planning
1401 DOVE ST. SUITE 240
NEWPORT BEACH, CA 92660
PHONE: (949) 752-1177
FAX: (949) 752-0151
WWW.KNITTER.COM

©KNITTER PARTNERS INTERNATIONAL
ALL RIGHTS RESERVED 2013

THIS DOCUMENT IS THE PROPERTY AND COPYRIGHT OF KNITTER PARTNERS INTERNATIONAL, INC. AND SHALL NOT BE USE ON ANY OTHER WORK, BE REPRODUCED OR DISCLOSED TO OTHERS EXCEPT BY WRITTEN AUTHORIZATION FROM KNITTER PARTNERS INTERNATIONAL, INC.

NO.	DATE	REVISION
△		
△		
△		
△		
△		

IMAGINE DEVELOPMENT L.L.C.

THE COLONY 65
LANCASTER, CALIFORNIA

LICENSED ARCHITECT
MICHAEL J. KNITTER
C10524
REN. 4-30-19
STATE OF CALIFORNIA

PROJECT INFO
PLAN 2

JOB NUMBER **3036**
PROJECT MGR. RC
DRAWN BY AD
PLOT DATE: 3-6-2018

SHEET TITLE
ELEVATION 'A' FRONT & LEFT ELEVATION

SHEET NUMBER
2.7

PLOT TIME: 11:05 AM PATH\NAME: G:\0_KPI\2013\13036 COLONY 65 PLANS\PLAN 2\3036 23 ELEVATION 2.DC5

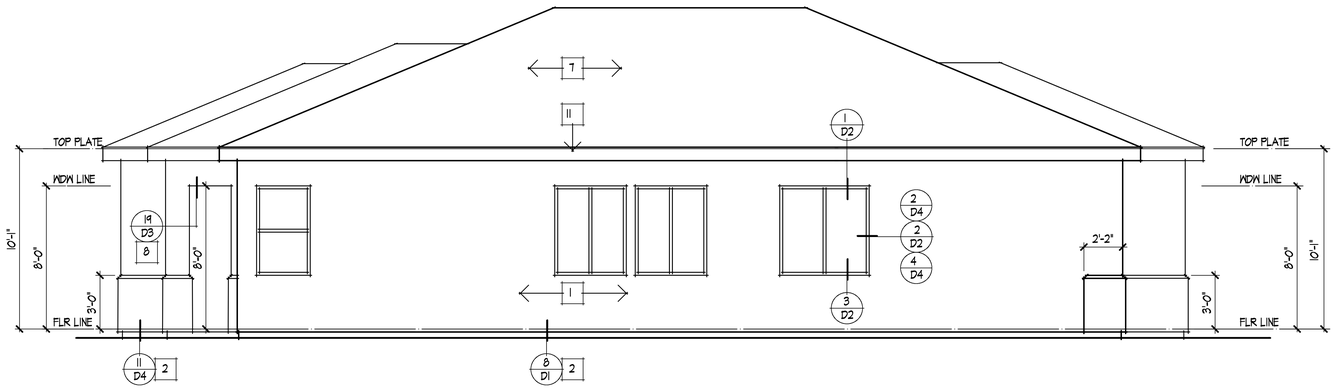

RIGHT A

SCALE: 1/4" = 1'-0"

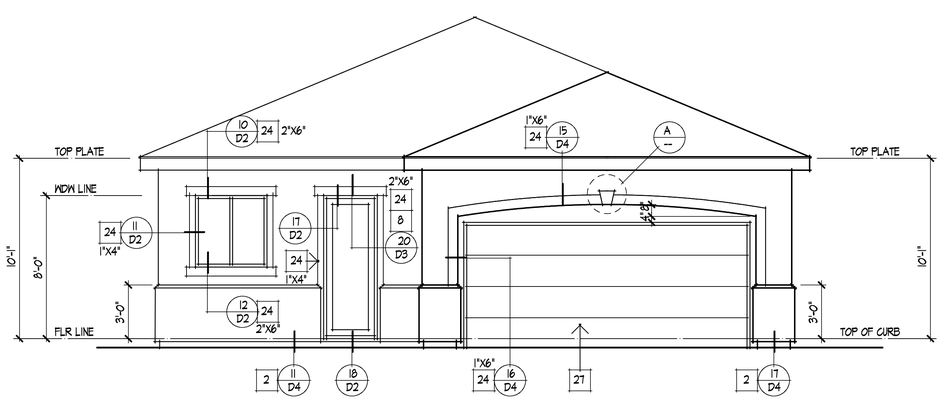

REAR A

SCALE: 1/4" = 1'-0"

ELEVATION NOTES

1. 7/8" STUCCO (REFER TO GENERAL NOTES)
2. CONTINUOUS G.I. STUCCO SCREED (REFER TO DETAIL)
3. APPROVED SPARK ARRESTER BY FIREPLACE MFR.
4. G.I. SADDLE AND FLASHING
5. G.I. CHIMNEY CAP BY FIREPLACE MFR.
6. G.I. FLASHING
7. ROOF MATERIAL (REFER TO ROOF NOTES)
8. STUCCO SOFFIT O/ METAL LATH O/ BUILDING PAPER
9. ATTIC VENT (REFER TO ATTIC VENT CALCS)
10. 3X6 RAFTER TAILS
11. RE/S FASCIA OR BARGE BOARD, SEE ELEVATIONS FOR SIZE.
12. RE/S TRIM. SEE ELEVATIONS FOR SIZE.
13. STUCCO OVER 2X TRIM
14. POT SHELF (REFER TO DETAIL)
15. LINE OF CEILING
16. LINE OF SHELF
17. LINE OF ROOF ABOVE
18. DECORATIVE FOAM PIPE
19. TYPICAL EXTERIOR SIDING
20. DECORATIVE TILE
21. WOOD SHUTTERS (NON ACTIVE)
22. WOOD CORBEL
23. STUCCO RECESS
24. FINISH COAT OVER FOAM TRIM. (REFER TO DETAIL)
25. ELDORADO STONE (ER-602) OR APPROVED EQUAL
26. WOOD OUTLOOKER
27. SECTIONAL GARAGE DOOR
28. WOOD RAIL OR W.I. RAIL (REFER TO DETAIL)
29. EXTERIOR GRADE PLYWOOD SOFFIT
30. 14" X 18" G.I. SCREENED AND LOUVERED COMBUSTION AIR VENT

KPI Inc.
KNITTER PARTNERS INTERNATIONAL, INC.
architecture & planning
1401 DOVE ST. SUITE 240
NEWPORT BEACH, CA 92660
PHONE: (949) 752-1177
FAX: (949) 752-0151
WWW.KNITTER.COM

©KNITTER PARTNERS INTERNATIONAL
ALL RIGHTS RESERVED 2013

THIS DOCUMENT IS THE PROPERTY AND COPYRIGHT OF KNITTER PARTNERS INTERNATIONAL, INC. AND SHALL NOT BE USE ON ANY OTHER WORK, BE REPRODUCED OR DISCLOSED TO OTHERS EXCEPT BY WRITTEN AUTHORIZATION FROM KNITTER PARTNERS INTERNATIONAL, INC.

NO.	DATE	REVISION
△		
△		
△		
△		
△		

IMAGINE DEVELOPMENT L.L.C.

THE COLONY 65
LANCASTER, CALIFORNIA

LICENSED ARCHITECT
MICHAEL J. KNITTER
C10524
REN. 4-30-19
STATE OF CALIFORNIA

PROJECT INFO
PLAN 2

JOB NUMBER **3036**
PROJECT MGR. RC
DRAWN BY AD
PLOT DATE: 3-6-2018

SHEET TITLE
ELEVATION 'A' RIGHT & REAR ELEVATIONS

SHEET NUMBER
2.8

PLOT TIME: 11:05 AM PATH\NAME: G:\0_KPI\2013\13036 COLONY 65 PLANS\PLAN 2\3036 23 ELEVATION 2.DC5

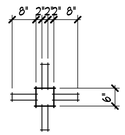

A DECORATIVE TILE
SCALE: 1/2" = 1'-0"

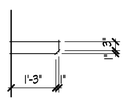

B WOOD OUTLOOKER
SCALE: 1/2" = 1'-0"

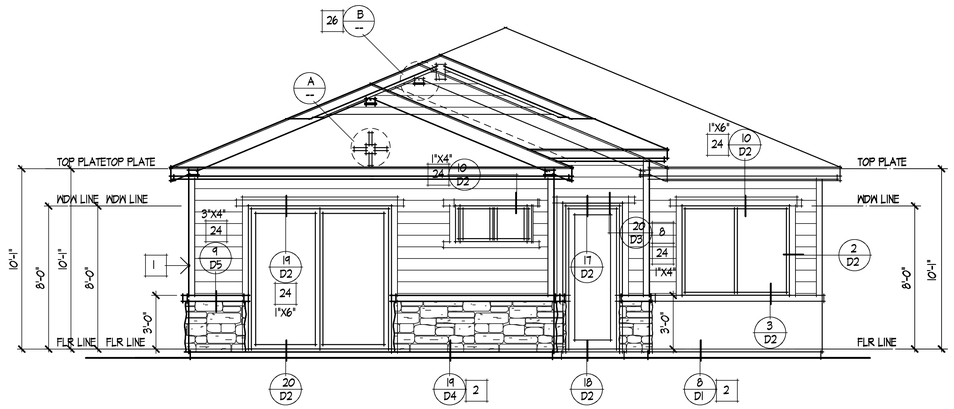

FRONT B

SCALE: 1/4" = 1'-0"

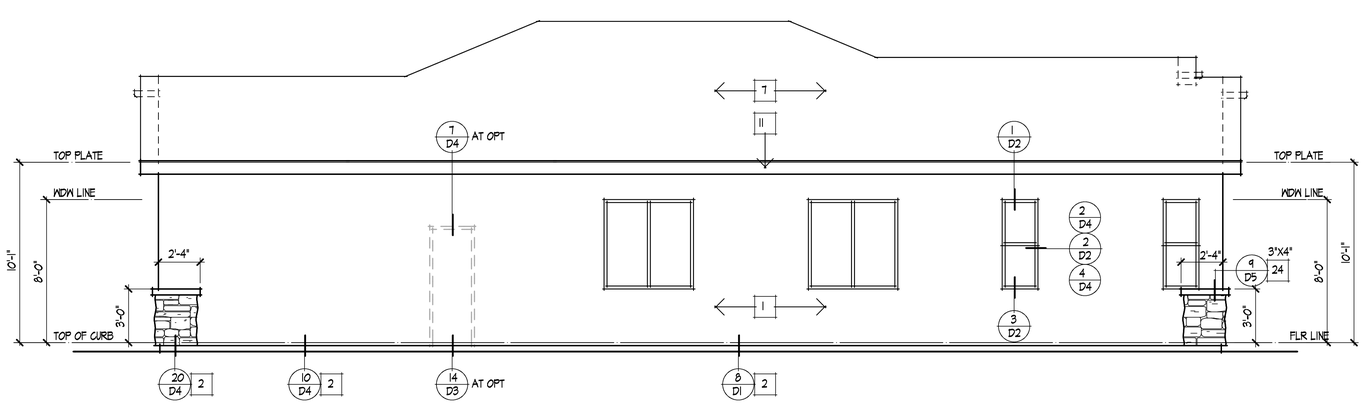

LEFT B

SCALE: 1/4" = 1'-0"

SEE SHEET 2.2.1 FOR ADDENDA INFORMATION PER ELEVATION.

ELEVATION NOTES

1. 7/8" STUCCO (REFER TO GENERAL NOTES)
2. CONTINUOUS G.I. STUCCO SCREED (REFER TO DETAIL)
3. APPROVED SPARK ARRESTER BY FIREPLACE MFR.
4. G.I. SADDLE AND FLASHING
5. G.I. CHIMNEY CAP BY FIREPLACE MFR.
6. G.I. FLASHING
7. ROOF MATERIAL (REFER TO ROOF NOTES)
8. STUCCO SOFFIT O/ METAL LATH O/ BUILDING PAPER
9. ATTIC VENT (REFER TO ATTIC VENT CALCS)
10. 3X6 RAFTER TAILS
11. RE/S FASCIA OR BARGE BOARD, SEE ELEVATIONS FOR SIZE.
12. RE/S TRIM. SEE ELEVATIONS FOR SIZE.
13. STUCCO OVER 2X TRIM
14. POT SHELF (REFER TO DETAIL)
15. LINE OF CEILING
16. LINE OF SHELF
17. LINE OF ROOF ABOVE
18. DECORATIVE FOAM PIPE
19. TYPICAL EXTERIOR SIDING
20. DECORATIVE TILE
21. WOOD SHUTTERS (NON ACTIVE)
22. WOOD CORBEL
23. STUCCO RECESS
24. FINISH COAT OVER FOAM TRIM. (REFER TO DETAIL)
25. ELDORADO STONE (ER-602) OR APPROVED EQUAL
26. WOOD OUTLOOKER
27. SECTIONAL GARAGE DOOR
28. WOOD RAIL OR W.I. RAIL (REFER TO DETAIL)
29. EXTERIOR GRADE PLYWOOD SOFFIT
30. 14" X 18" G.I. SCREENED AND LOUVERED COMBUSTION AIR VENT

KPI Inc.
KNITTER PARTNERS INTERNATIONAL, INC.
architecture & planning
1401 DOVE ST. SUITE 240
NEWPORT BEACH, CA 92660
PHONE: (949) 752-1177
FAX: (949) 752-0151
WWW.KNITTER.COM

©KNITTER PARTNERS INTERNATIONAL
ALL RIGHTS RESERVED 2013

THIS DOCUMENT IS THE PROPERTY AND COPYRIGHT OF KNITTER PARTNERS INTERNATIONAL, INC. AND SHALL NOT BE USE ON ANY OTHER WORK, BE REPRODUCED OR DISCLOSED TO OTHERS EXCEPT BY WRITTEN AUTHORIZATION FROM KNITTER PARTNERS INTERNATIONAL, INC.

NO.	DATE	REVISION
△		
△		
△		
△		
△		

IMAGINE DEVELOPMENT L.L.C.

THE COLONY 65
LANCASTER, CALIFORNIA

LICENSED ARCHITECT
MICHAEL J. KNITTER
C10524
REN. 4-30-19
STATE OF CALIFORNIA

PROJECT INFO
PLAN 2

JOB NUMBER **3036**
PROJECT MGR. RC
DRAWN BY AD
PLOT DATE: 3-6-2018

SHEET TITLE
ELEVATION 'B' FRONT & LEFT ELEVATION

SHEET NUMBER
2.9

PLOT TIME: 11:05 AM PATH\NAME: G:\0_KPI\2013\13036 COLONY 65 PLANS\PLAN 2\3036 23 ELEVATION 2.DC5

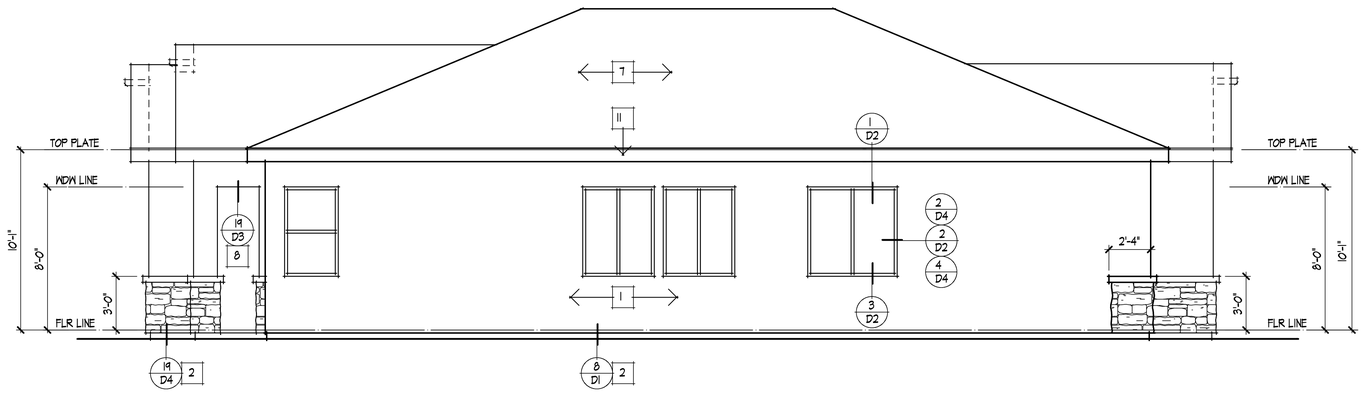

RIGHT

B

SCALE: 1/4" = 1'-0"

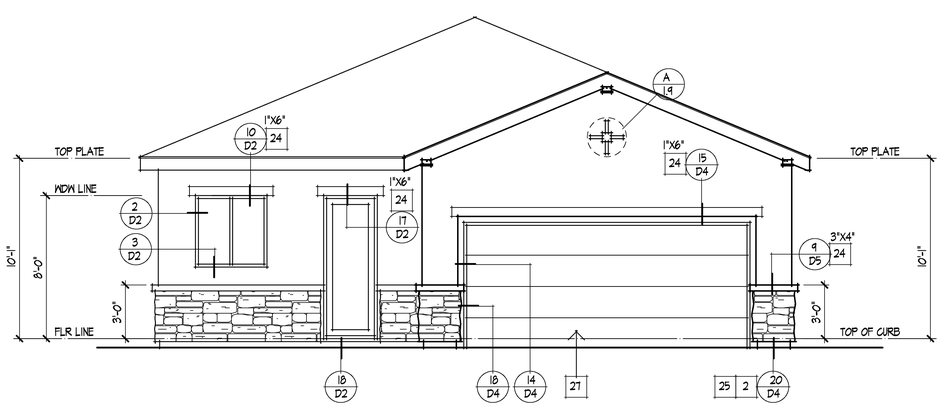

REAR

B

SCALE: 1/4" = 1'-0"

ELEVATION NOTES

1. 7/8" STUCCO (REFER TO GENERAL NOTES)
2. CONTINUOUS G.I. STUCCO SCREED (REFER TO DETAIL)
3. APPROVED SPARK ARRESTER BY FIREPLACE MFR.
4. G.I. SADDLE AND FLASHING
5. G.I. CHIMNEY CAP BY FIREPLACE MFR.
6. G.I. FLASHING
7. ROOF MATERIAL (REFER TO ROOF NOTES)
8. STUCCO SOFFIT O/ METAL LATH O/ BUILDING PAPER
9. ATTIC VENT (REFER TO ATTIC VENT CALCS)
10. 3X6 RAFTER TAILS
11. RE/S FASCIA OR BARGE BOARD, SEE ELEVATIONS FOR SIZE.
12. RE/S TRIM. SEE ELEVATIONS FOR SIZE.
13. STUCCO OVER 2X TRIM
14. POT SHELF (REFER TO DETAIL)
15. LINE OF CEILING
16. LINE OF SHELF
17. LINE OF ROOF ABOVE
18. DECORATIVE FOAM PIPE
19. TYPICAL EXTERIOR SIDING
20. DECORATIVE TILE
21. WOOD SHUTTERS (NON ACTIVE)
22. WOOD CORBEL
23. STUCCO RECESS
24. FINISH COAT OVER FOAM TRIM. (REFER TO DETAIL)
25. ELDORADO STONE (ER-602) OR APPROVED EQUAL
26. WOOD OUTLOOKER
27. SECTIONAL GARAGE DOOR
28. WOOD RAIL OR W.I. RAIL (REFER TO DETAIL)
29. EXTERIOR GRADE PLYWOOD SOFFIT
30. 14" X 18" G.I. SCREENED AND LOUVERED COMBUSTION AIR VENT

KPI Inc.
KNITTER PARTNERS INTERNATIONAL, INC.
architecture & planning
1401 DOVE ST. SUITE 240
NEWPORT BEACH, CA 92660
PHONE: (949) 752-1177
FAX: (949) 752-0151
WWW.KNITTER.COM

©KNITTER PARTNERS INTERNATIONAL
ALL RIGHTS RESERVED 2013

THIS DOCUMENT IS THE PROPERTY AND COPYRIGHT OF KNITTER PARTNERS INTERNATIONAL, INC. AND SHALL NOT BE USE ON ANY OTHER WORK, BE REPRODUCED OR DISCLOSED TO OTHERS EXCEPT BY WRITTEN AUTHORIZATION FROM KNITTER PARTNERS INTERNATIONAL, INC.

NO.	DATE	REVISION
△		
△		
△		
△		
△		

IMAGINE DEVELOPMENT L.L.C.

THE COLONY 65
LANCASTER, CALIFORNIA

LICENSED ARCHITECT
MICHAEL J. KNITTER
C10524
REN. 4-30-19
STATE OF CALIFORNIA

PROJECT INFO

PLAN 2

JOB NUMBER **3036**
PROJECT MGR. RC
DRAWN BY AD
PLOT DATE: 3-6-2018

SHEET TITLE

ELEVATION 'B' RIGHT & REAR ELEVATIONS

SHEET NUMBER

2.10

PLOT TIME: 11:05 AM PATH\NAME: G:\0_KPI\2013\13036 COLONY 65 PLANS\PLAN 2\3036 23 ELEVATION 2.DC5

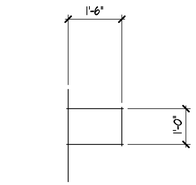

A WOOD OUTLOOKER
SCALE: 1/2" = 1'-0"

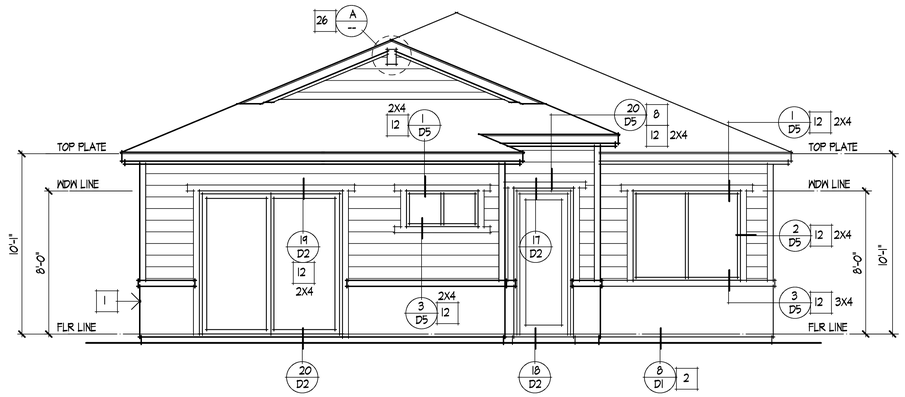

FRONT C

SCALE: 1/4" = 1'-0"

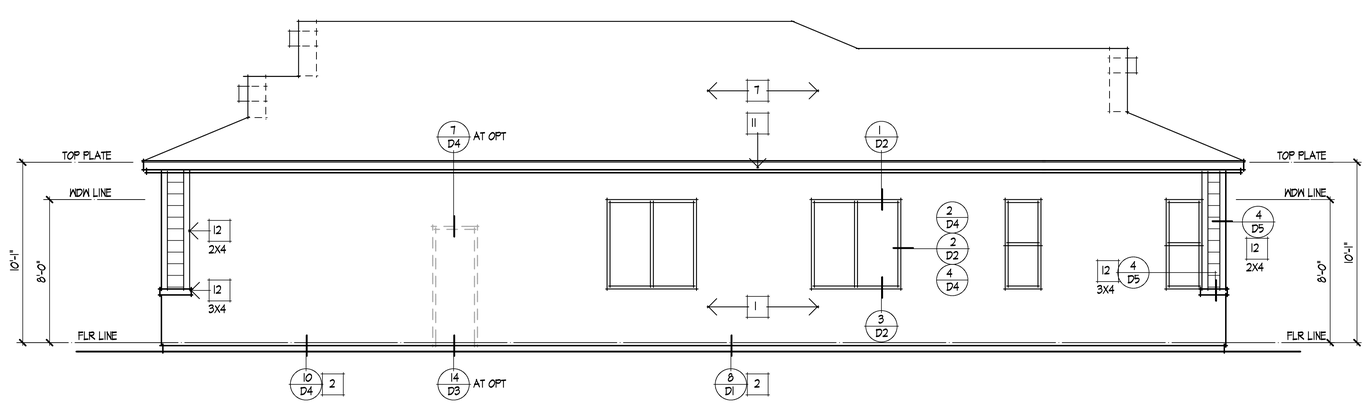

LEFT C

SCALE: 1/4" = 1'-0"

SEE SHEET 2.21 FOR ADDENDA INFORMATION PER ELEVATION.

ELEVATION NOTES

1. 7/8" STUCCO (REFER TO GENERAL NOTES)
2. CONTINUOUS G.I. STUCCO SCREED (REFER TO DETAIL)
3. APPROVED SPARK ARRESTER BY FIREPLACE MFR.
4. G.I. SADDLE AND FLASHING
5. G.I. CHIMNEY CAP BY FIREPLACE MFR.
6. G.I. FLASHING
7. ROOF MATERIAL (REFER TO ROOF NOTES)
8. STUCCO SOFFIT O/ METAL LATH O/ BUILDING PAPER
9. ATTIC VENT (REFER TO ATTIC VENT CALCS)
10. 3X6 RAFTER TAILS
11. RE/S FASCIA OR BARGE BOARD, SEE ELEVATIONS FOR SIZE.
12. RE/S TRIM. SEE ELEVATIONS FOR SIZE.
13. STUCCO OVER 2X TRIM
14. POT SHELF (REFER TO DETAIL)
15. LINE OF CEILING
16. LINE OF SHELF
17. LINE OF ROOF ABOVE
18. DECORATIVE FOAM PIPE
19. TYPICAL EXTERIOR SIDING
20. DECORATIVE TILE
21. WOOD SHUTTERS (NON ACTIVE)
22. WOOD CORBEL
23. STUCCO RECESS
24. FINISH COAT OVER FOAM TRIM. (REFER TO DETAIL)
25. ELDORADO STONE (ER-602) OR APPROVED EQUAL
26. WOOD OUTLOOKER
27. SECTIONAL GARAGE DOOR
28. WOOD RAIL OR W.I. RAIL (REFER TO DETAIL)
29. EXTERIOR GRADE PLYWOOD SOFFIT
30. 14" X 18" G.I. SCREENED AND LOUVERED COMBUSTION AIR VENT

KPI Inc.
KNITTER PARTNERS INTERNATIONAL, INC.
architecture & planning
1401 DOVE ST. SUITE 240
NEWPORT BEACH, CA 92660
PHONE: (949) 752-1177
FAX: (949) 752-0151
WWW.KNITTER.COM

©KNITTER PARTNERS INTERNATIONAL
ALL RIGHTS RESERVED 2013

THIS DOCUMENT IS THE PROPERTY AND COPYRIGHT OF KNITTER PARTNERS INTERNATIONAL, INC. AND SHALL NOT BE USE ON ANY OTHER WORK, BE REPRODUCED OR DISCLOSED TO OTHERS EXCEPT BY WRITTEN AUTHORIZATION FROM KNITTER PARTNERS INTERNATIONAL, INC.

NO.	DATE	REVISION
△		
△		
△		
△		
△		

IMAGINE DEVELOPMENT L.L.C.

THE COLONY 65
LANCASTER, CALIFORNIA

LICENSED ARCHITECT
MICHAEL J. KNITTER
C10524
REN. 4-30-19
STATE OF CALIFORNIA

PROJECT INFO
PLAN 2

JOB NUMBER **3036**
PROJECT MGR. RC
DRAWN BY AD
PLOT DATE: 3-6-2018

SHEET TITLE
ELEVATION 'C' FRONT & LEFT ELEVATION

SHEET NUMBER
2.11

PLOT TIME: 11:05 AM PATH\NAME: G:\0_KPI\2013\13036 COLONY 65 PLANS\PLAN 2\3036 23 ELEVATION 2.DC5

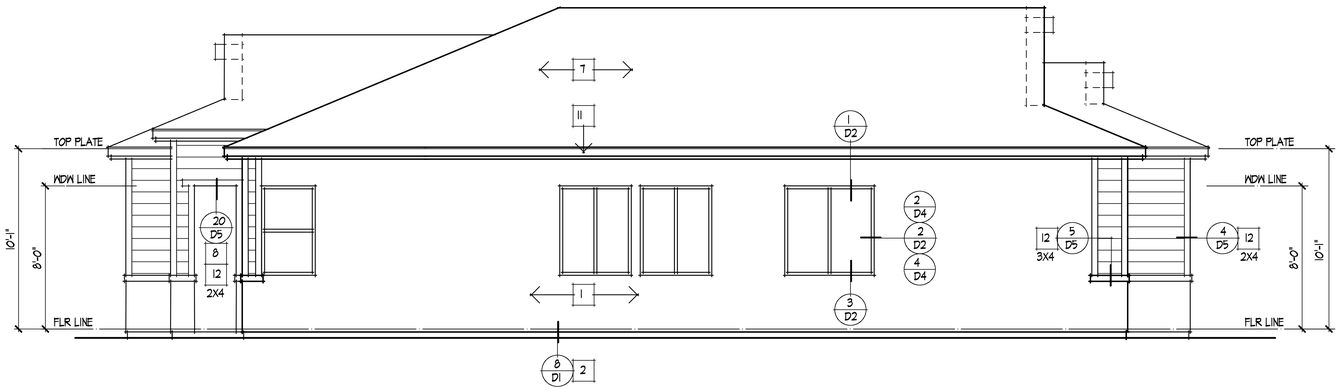

RIGHT C

SCALE: 1/4" = 1'-0"

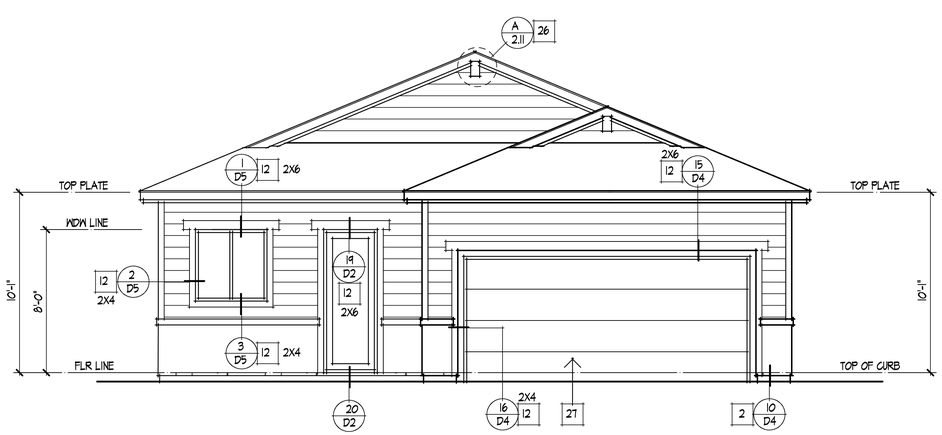

REAR C

SCALE: 1/4" = 1'-0"

ELEVATION NOTES

1. 7/8" STUCCO (REFER TO GENERAL NOTES)
2. CONTINUOUS G.I. STUCCO SCREED (REFER TO DETAIL)
3. APPROVED SPARK ARRESTER BY FIREPLACE MFR.
4. G.I. SADDLE AND FLASHING
5. G.I. CHIMNEY CAP BY FIREPLACE MFR.
6. G.I. FLASHING
7. ROOF MATERIAL (REFER TO ROOF NOTES)
8. STUCCO SOFFIT O/ METAL LATH O/ BUILDING PAPER
9. ATTIC VENT (REFER TO ATTIC VENT CALCS)
10. 3X6 RAFTER TAILS
11. RE/S FASCIA OR BARGE BOARD, SEE ELEVATIONS FOR SIZE.
12. RE/S TRIM. SEE ELEVATIONS FOR SIZE.
13. STUCCO OVER 2X TRIM
14. POT SHELF (REFER TO DETAIL)
15. LINE OF CEILING
16. LINE OF SHELF
17. LINE OF ROOF ABOVE
18. DECORATIVE FOAM PIPE
19. TYPICAL EXTERIOR SIDING
20. DECORATIVE TILE
21. WOOD SHUTTERS (NON ACTIVE)
22. WOOD CORBEL
23. STUCCO RECESS
24. FINISH COAT OVER FOAM TRIM. (REFER TO DETAIL)
25. ELDORADO STONE (ER-602) OR APPROVED EQUAL
26. WOOD OUTLOOKER
27. SECTIONAL GARAGE DOOR
28. WOOD RAIL OR W.I. RAIL (REFER TO DETAIL)
29. EXTERIOR GRADE PLYWOOD SOFFIT
30. 14" X 18" G.I. SCREENED AND LOUVERED COMBUSTION AIR VENT

KPI Inc.
KNITTER PARTNERS INTERNATIONAL, INC.
architecture & planning
1401 DOVE ST. SUITE 240
NEWPORT BEACH, CA 92660
PHONE: (949) 752-1177
FAX: (949) 752-0151
WWW.KNITTER.COM

©KNITTER PARTNERS INTERNATIONAL
ALL RIGHTS RESERVED 2013

THIS DOCUMENT IS THE PROPERTY AND COPYRIGHT OF KNITTER PARTNERS INTERNATIONAL, INC. AND SHALL NOT BE USE ON ANY OTHER WORK, BE REPRODUCED OR DISCLOSED TO OTHERS EXCEPT BY WRITTEN AUTHORIZATION FROM KNITTER PARTNERS INTERNATIONAL, INC.

NO.	DATE	REVISION
△		
△		
△		
△		
△		

IMAGINE DEVELOPMENT L.L.C.

THE COLONY 65
LANCASTER, CALIFORNIA

LICENSED ARCHITECT
MICHAEL J. KNITTER
C10524
REN. 4-30-19
STATE OF CALIFORNIA

PROJECT INFO
PLAN 2

JOB NUMBER **3036**
PROJECT MGR. RC
DRAWN BY AD
PLOT DATE: 3-6-2018

SHEET TITLE
ELEVATION 'C' RIGHT & REAR ELEVATIONS

SHEET NUMBER
2.12

PLOT TIME: 11:05 AM PATH\NAME: G:\0_KPI\2013\13036 COLONY 65 PLANS\PLAN 2\3036 23 ELEVATION 2.DC5

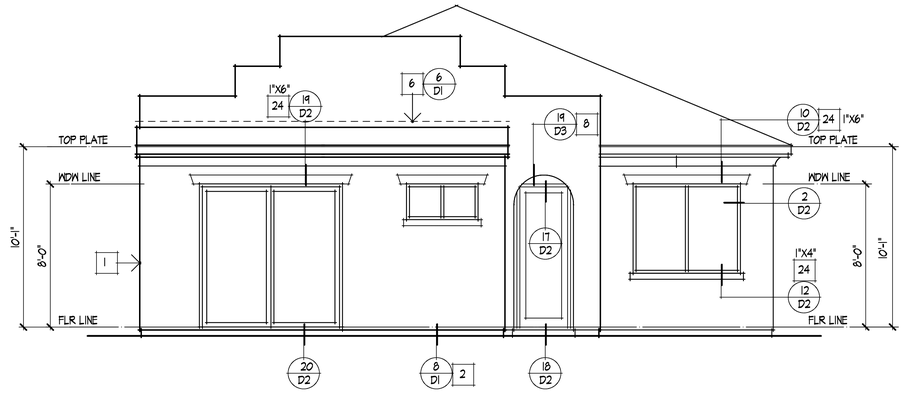

FRONT D

SCALE: 1/4" = 1'-0"

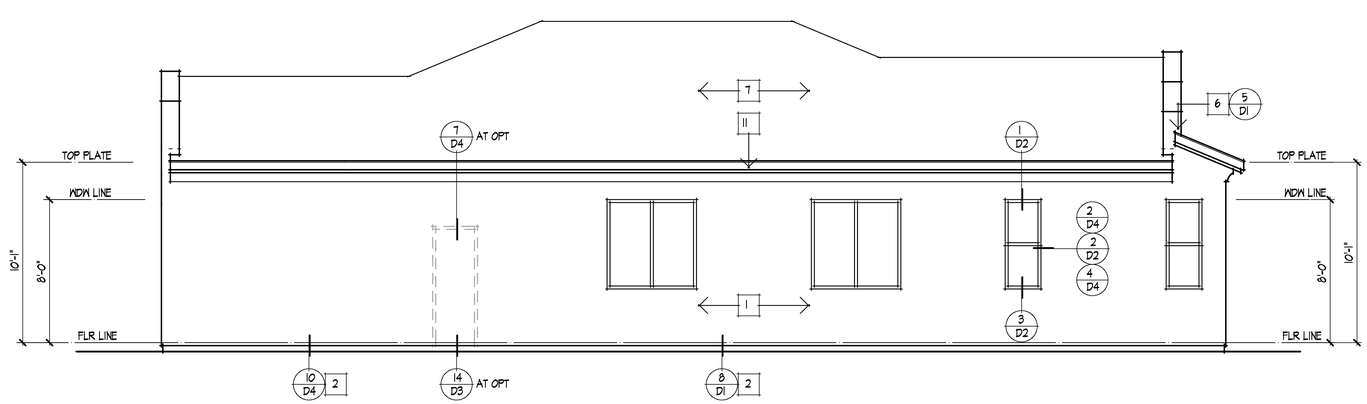

LEFT D

SCALE: 1/4" = 1'-0"

SEE SHEET 2.2.2 FOR ADDENDA INFORMATION PER ELEVATION.

ELEVATION NOTES

1. 7/8" STUCCO (REFER TO GENERAL NOTES)
2. CONTINUOUS G.I. STUCCO SCREED (REFER TO DETAIL)
3. APPROVED SPARK ARRESTER BY FIREPLACE MFR.
4. G.I. SADDLE AND FLASHING
5. G.I. CHIMNEY CAP BY FIREPLACE MFR.
6. G.I. FLASHING
7. ROOF MATERIAL (REFER TO ROOF NOTES)
8. STUCCO SOFFIT O/ METAL LATH O/ BUILDING PAPER
9. ATTIC VENT (REFER TO ATTIC VENT CALCS)
10. 3X6 RAFTER TAILS
11. RE/S FASCIA OR BARGE BOARD, SEE ELEVATIONS FOR SIZE.
12. RE/S TRIM. SEE ELEVATIONS FOR SIZE.
13. STUCCO OVER 2X TRIM
14. POT SHELF (REFER TO DETAIL)
15. LINE OF CEILING
16. LINE OF SHELF
17. LINE OF ROOF ABOVE
18. DECORATIVE FOAM PIPE
19. TYPICAL EXTERIOR SIDING
20. DECORATIVE TILE
21. WOOD SHUTTERS (NON ACTIVE)
22. WOOD CORBEL
23. STUCCO RECESS
24. FINISH COAT OVER FOAM TRIM. (REFER TO DETAIL)
25. ELDORADO STONE (ER-602) OR APPROVED EQUAL
26. WOOD OUTLOOKER
27. SECTIONAL GARAGE DOOR
28. WOOD RAIL OR W.I. RAIL (REFER TO DETAIL)
29. EXTERIOR GRADE PLYWOOD SOFFIT
30. 14" X 18" G.I. SCREENED AND LOUVERED COMBUSTION AIR VENT

KPI Inc.
KNITTER PARTNERS INTERNATIONAL, INC.
architecture & planning
1401 DOVE ST. SUITE 240
NEWPORT BEACH, CA 92660
PHONE: (949) 752-1177
FAX: (949) 752-0151
WWW.KNITTER.COM

©KNITTER PARTNERS INTERNATIONAL
ALL RIGHTS RESERVED 2013

THIS DOCUMENT IS THE PROPERTY AND COPYRIGHT OF KNITTER PARTNERS INTERNATIONAL, INC. AND SHALL NOT BE USE ON ANY OTHER WORK, BE REPRODUCED OR DISCLOSED TO OTHERS EXCEPT BY WRITTEN AUTHORIZATION FROM KNITTER PARTNERS INTERNATIONAL, INC.

NO.	DATE	REVISION
△		
△		
△		
△		
△		

IMAGINE DEVELOPMENT L.L.C.

THE COLONY 65
LANCASTER, CALIFORNIA

LICENSED ARCHITECT
MICHAEL J. KNITTER
C10524
REN. 4-30-19
STATE OF CALIFORNIA

PROJECT INFO
PLAN 2

JOB NUMBER **3036**
PROJECT MGR. RC
DRAWN BY AD
PLOT DATE: 3-6-2018

SHEET TITLE
ELEVATION 'D' FRONT & LEFT ELEVATION

SHEET NUMBER
2.13

PLOT TIME: 11:05 AM PATH\NAME: G:\0_KPI\2013\13036 COLONY 65 PLANS\PLAN 2\3036 23 ELEVATION 2.DC5

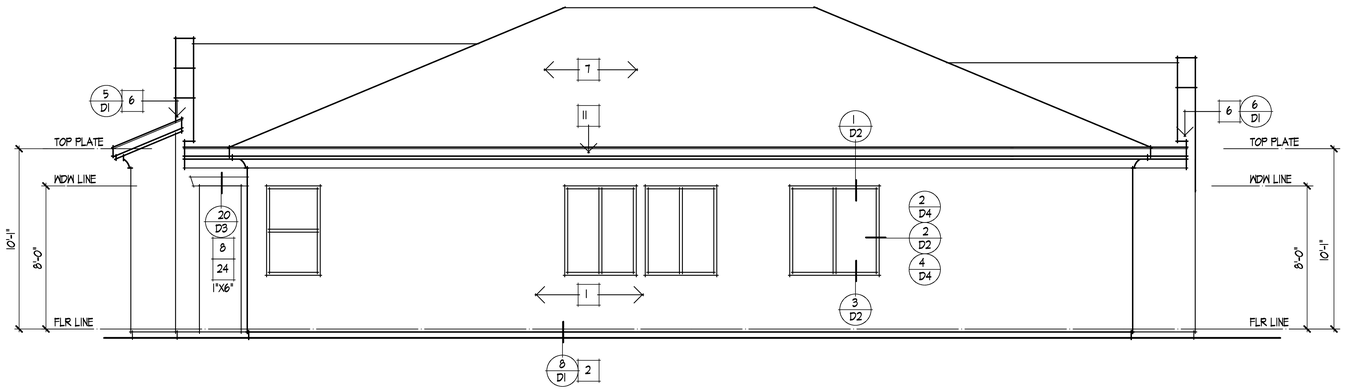

RIGHT D

SCALE: 1/4" = 1'-0"

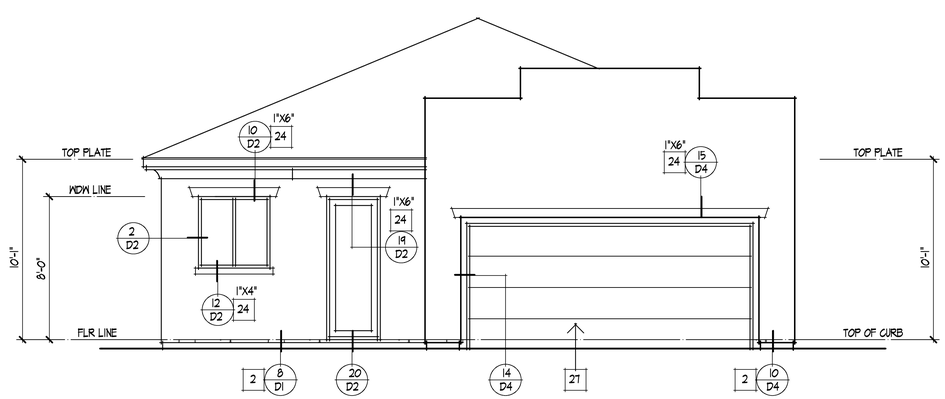

REAR D

SCALE: 1/4" = 1'-0"

ELEVATION NOTES

1. 7/8" STUCCO (REFER TO GENERAL NOTES)
2. CONTINUOUS G.I. STUCCO SCREED (REFER TO DETAIL)
3. APPROVED SPARK ARRESTER BY FIREPLACE MFR.
4. G.I. SADDLE AND FLASHING
5. G.I. CHIMNEY CAP BY FIREPLACE MFR.
6. G.I. FLASHING
7. ROOF MATERIAL (REFER TO ROOF NOTES)
8. STUCCO SOFFIT O/ METAL LATH O/ BUILDING PAPER
9. ATTIC VENT (REFER TO ATTIC VENT CALCS)
10. 3X6 RAFTER TAILS
11. RE/S FASCIA OR BARGE BOARD, SEE ELEVATIONS FOR SIZE.
12. RE/S TRIM. SEE ELEVATIONS FOR SIZE.
13. STUCCO OVER 2X TRIM
14. POT SHELF (REFER TO DETAIL)
15. LINE OF CEILING
16. LINE OF SHELF
17. LINE OF ROOF ABOVE
18. DECORATIVE FOAM PIPE
19. TYPICAL EXTERIOR SIDING
20. DECORATIVE TILE
21. WOOD SHUTTERS (NON ACTIVE)
22. WOOD CORBEL
23. STUCCO RECESS
24. FINISH COAT OVER FOAM TRIM. (REFER TO DETAIL)
25. ELDORADO STONE (ER-602) OR APPROVED EQUAL
26. WOOD OUTLOOKER
27. SECTIONAL GARAGE DOOR
28. WOOD RAIL OR W.I. RAIL (REFER TO DETAIL)
29. EXTERIOR GRADE PLYWOOD SOFFIT
30. 14" X 18" G.I. SCREENED AND LOUVERED COMBUSTION AIR VENT

KPI Inc.
KNITTER PARTNERS INTERNATIONAL, INC.
architecture & planning
1401 DOVE ST. SUITE 240
NEWPORT BEACH, CA 92660
PHONE: (949) 752-1177
FAX: (949) 752-0151
WWW.KNITTER.COM

©KNITTER PARTNERS INTERNATIONAL
ALL RIGHTS RESERVED 2013

THIS DOCUMENT IS THE PROPERTY AND COPYRIGHT OF KNITTER PARTNERS INTERNATIONAL, INC. AND SHALL NOT BE USE ON ANY OTHER WORK, BE REPRODUCED OR DISCLOSED TO OTHERS EXCEPT BY WRITTEN AUTHORIZATION FROM KNITTER PARTNERS INTERNATIONAL, INC.

NO.	DATE	REVISION
△		
△		
△		
△		
△		

IMAGINE DEVELOPMENT L.L.C.

THE COLONY 65
LANCASTER, CALIFORNIA

LICENSED ARCHITECT
MICHAEL J. KNITTER
C10524
REN. 4-30-19
STATE OF CALIFORNIA

PROJECT INFO
PLAN 2

JOB NUMBER **3036**
PROJECT MGR. RC
DRAWN BY AD
PLOT DATE: 3-6-2018

SHEET TITLE
ELEVATION 'D' RIGHT & REAR ELEVATIONS

SHEET NUMBER
2.14

PLOT TIME: 11:05 AM PATH\NAME: G:\0_KPI\2013\13036 COLONY 65 PLANS\PLAN 2\3036 23 ELEVATION 2.DC5

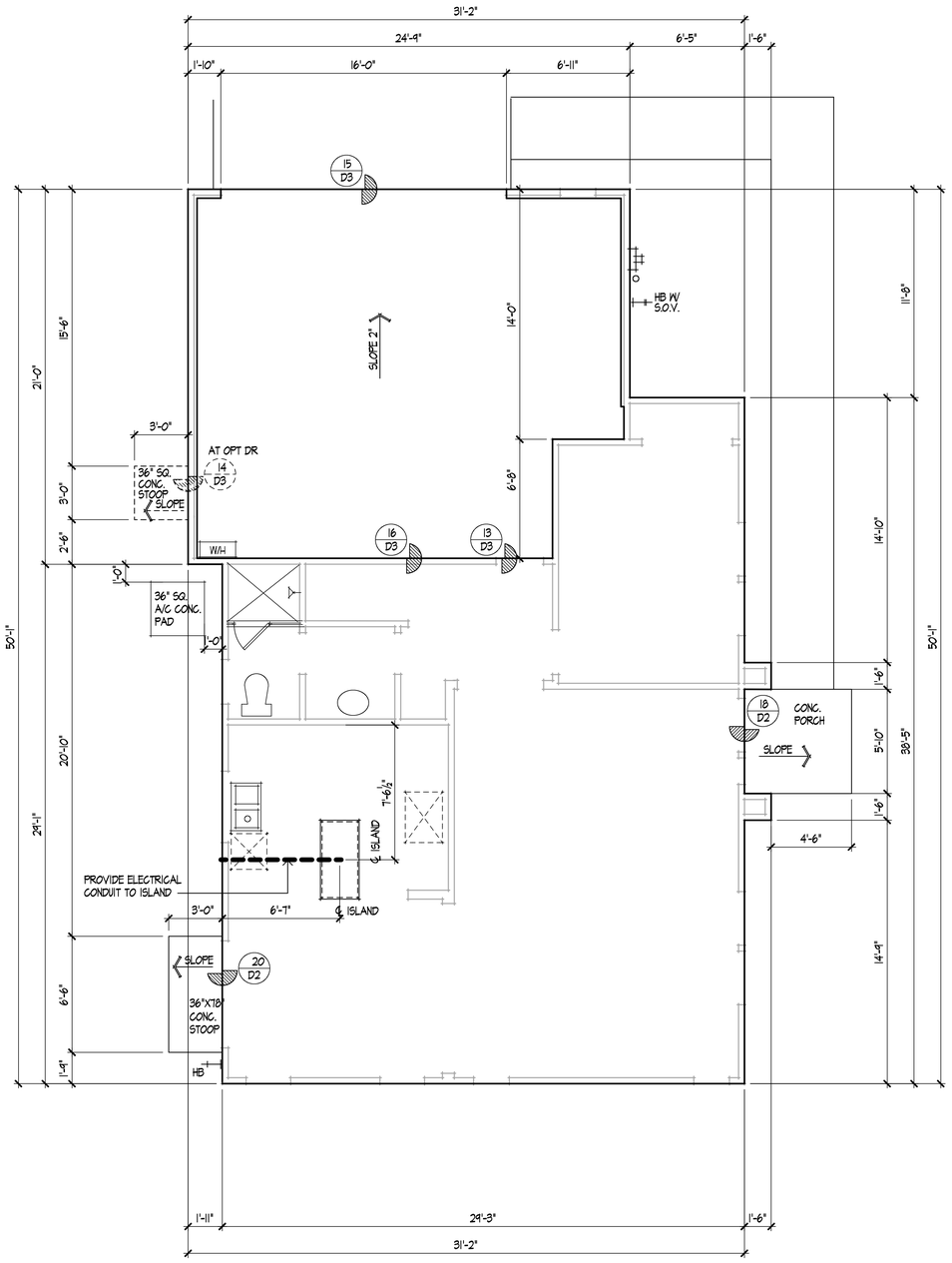

SLAB INTERFACE PLAN - A

SCALE: 1/4" = 1'-0"

CONCRETE PLACEMENT

THE FOLLOWING ARE ARCHITECTUAL MINIMUM STANDARDS ONLY. REFER TO PROJECT SOILS REPORT AND STRUCTURAL ENGINEERS DRAWINGS FOR NOTES AND INFORMATION NOT SHOWN HERE.

CONCRETE SLABS:

CONCRETE SLABS SHALL BE PLACED OVER A MINIMUM OF 1" CLEAN DAMP SAND OVER 6 MIL. VISQUEEN OVER 1" CLEAN DAMP SAND.

CONCRETE STOOPS:

CONCRETE STOOPS SHALL BE PROVIDED AT EACH EXTERIOR DOOR.
STOOP SHALL BE A MINIMUM OF 1'-0" WIDER THAN THE DOOR 6" EACH SIDE.
STOOP SHALL PROJECT A MINIMUM OF 36" IN FRONT OF DOOR OPENING.
STOOP SHALL BE A MIN. OF 3-1/2" THICK.
STOOP SHALL BE ATTATCHED TO HOUSE W/ # 4 REBARS AT 24" O/C. (MINIMUM 2)

CONCRETE PORCHES:

CONCRETE PORCHES SHALL BE PROVIDED AT THE FRONT OR MAIN ENTRY DOOR.
PORCH DIMENSIONS ARE NOTED ON PLANS.
PORCH SHALL BE A MINIMUM OF 3-1/2" THICK.
PORCH SHALL BE ATTATCHED TO HOUSE W/ # 4 REBARS AT 24" O/C. (MINIMUM 2)
EXCEPTION , WOOD PORCHES. SEE PLAN.

INDICATES DROP IN SLAB (SEE DETAILS)

DRIVEWAYS AND FLATWORK :

SEE CIVIL ENGINEERING DRAWING FOR DRIVEWAYS AND FLATWORK.

REFER TO GENERAL NOTES SHEET G-1 DIV. 3 FOR FURTHER ARCHITECTURAL CONCRETE MINIMUM REQUIRMENTS.

DEPARTMENT OF PUBLIC WORKS

PRIOR TO REQUESTING A FOUNDATION INSPECTION, THE ENGINEER OF RECORD SHALL FIELD VERIFY THE BUILDING PAD HEIGHT AND SUBMIT A LETTER TO THE CITY ENGINEER CERTIFYING THE BUILDING PAD HEIGHT AS COMPLYING W/ THE APPROVED GRADING PLAN.

ARCHITECTURAL REFERENCE ONLY. SEE STRUCTURAL ENGINEERS PLANS FOR STRUCTURAL INFORMATION NOT SHOWN HERE

KPI Inc.

KNITTER PARTNERS INTERNATIONAL, INC.
architecture & planning

1401 DOVE ST. SUITE 240
NEWPORT BEACH, CA 92660
PHONE: (949) 752-1177
FAX: (949) 752-0151
WWW.KNITTER.COM

©KNITTER PARTNERS INTERNATIONAL
ALL RIGHTS RESERVED 2013

THIS DOCUMENT IS THE PROPERTY AND COPYRIGHT OF KNITTER PARTNERS INTERNATIONAL, INC. AND SHALL NOT BE USE ON ANY OTHER WORK, BE REPRODUCED OR DISCLOSED TO OTHERS EXCEPT BY WRITTEN AUTHORIZATION FROM KNITTER PARTNERS INTERNATIONAL, INC.

NO.	DATE	REVISION
△		
△		
△		
△		
△		

IMAGINE DEVELOPMENT L.L.C.

THE COLONY 65
LANCASTER, CALIFORNIA

LICENSED ARCHITECT
MICHAEL J. KNITTER
C10524
REN. 4-30-19
STATE OF CALIFORNIA

PROJECT INFO

PLAN 3

JOB NUMBER **3036**
PROJECT MGR. RC
DRAWN BY RC
PLOT DATE: 3-6-2018

SHEET TITLE

SLAB INTERFACE PLAN

SHEET NUMBER

3.1

PLOT TIME: 11:08 AM PATH\NAME: G:\O_KPI\2013\13036 COLONY 65 PLANS\PLAN 3\3036 30 PLAN 3.DC5

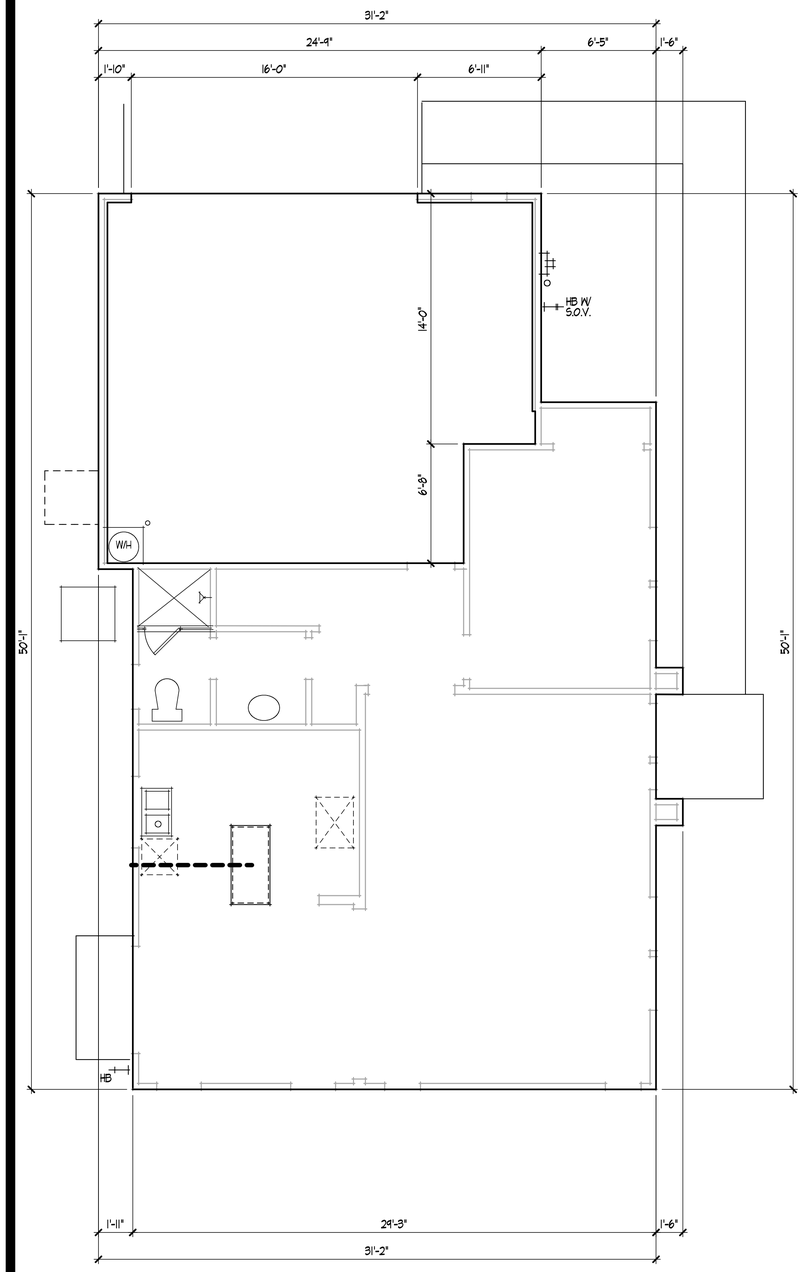

SLAB INTERFACE PLAN ADDENDUM - B

SCALE: 1/4" = 1'-0"

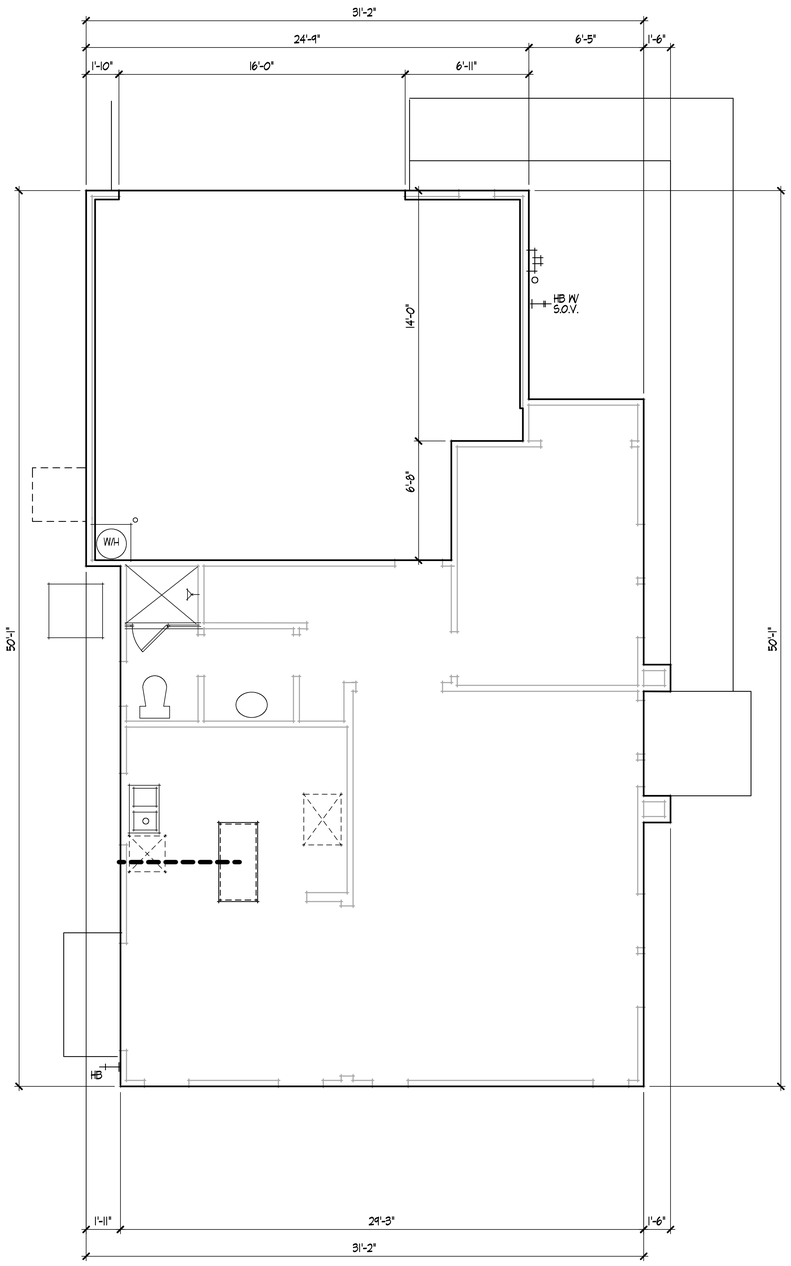

SLAB INTERFACE PLAN ADDENDUM - C

SCALE: 1/4" = 1'-0"

PLOT TIME: 9:23 AM PATH\NAME: G:\O_KPI\2013\13036 COLONY 65 PLANS\PLAN 3\3036 31 PLAN 3 ADDENDA.DC5

KPI Inc.
KNITTER PARTNERS INTERNATIONAL, INC.
architecture & planning
1401 DOVE ST. SUITE 240
NEWPORT BEACH, CA 92660
PHONE: (949) 752-1177
FAX: (949) 752-0151
WWW.KNITTER.COM

©KNITTER PARTNERS INTERNATIONAL
ALL RIGHTS RESERVED 2013

THIS DOCUMENT IS THE PROPERTY AND COPYRIGHT OF KNITTER PARTNERS INTERNATIONAL, INC. AND SHALL NOT BE USE ON ANY OTHER WORK, BE REPRODUCED OR DISCLOSED TO OTHERS EXCEPT BY WRITTEN AUTHORIZATION FROM KNITTER PARTNERS INTERNATIONAL, INC.

NO.	DATE	REVISION
△		
△		
△		
△		
△		

IMAGINE DEVELOPMENT L.L.C.

THE COLONY 65
LANCASTER, CALIFORNIA

LICENSED ARCHITECT
MICHAEL J. KNITTER
C10524
REN. 4-30-19
STATE OF CALIFORNIA

PROJECT INFO

PLAN 3

JOB NUMBER **3036**
PROJECT MGR. RC
DRAWN BY AD
PLOT DATE: 3-6-2018

SHEET TITLE

SLAB INTERFACE PLAN ADDENDA

SHEET NUMBER

3.1.1

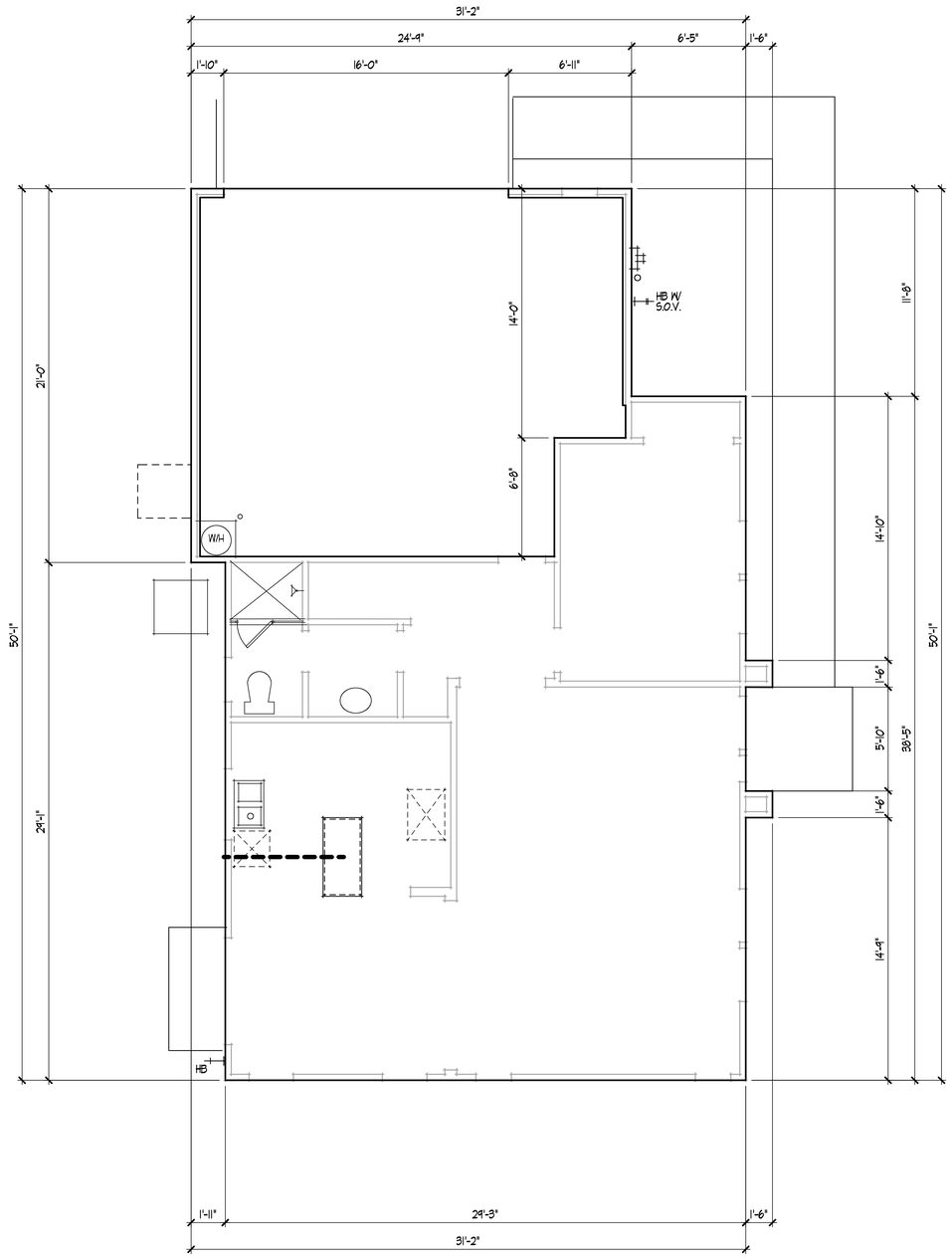

SLAB INTERFACE PLAN ADDENDUM - D

SCALE: 1/4" = 1'-0"

PLOT TIME: 9:24 AM PATH\NAME: G:\O_KPI\2013\13036 COLONY 65 PLANS\PLAN 3\3036 31 PLAN 3 ADDENDUM D.DC5

KPI Inc.

KNITTER PARTNERS INTERNATIONAL, INC.
architecture & planning

1401 DOVE ST. SUITE 240
NEWPORT BEACH, CA 92660
PHONE: (949) 752-1177
FAX: (949) 752-0151
WWW.KNITTER.COM

©KNITTER PARTNERS INTERNATIONAL
ALL RIGHTS RESERVED 2013

THIS DOCUMENT IS THE PROPERTY AND COPYRIGHT OF KNITTER PARTNERS INTERNATIONAL, INC. AND SHALL NOT BE USE ON ANY OTHER WORK, BE REPRODUCED OR DISCLOSED TO OTHERS EXCEPT BY WRITTEN AUTHORIZATION FROM KNITTER PARTNERS INTERNATIONAL, INC.

NO.	DATE	REVISION
△		
△		
△		
△		
△		

IMAGINE DEVELOPMENT L.L.C.

THE COLONY 65
LANCASTER, CALIFORNIA

LICENSED ARCHITECT
MICHAEL J. KNITTER
C10524
REN. 4-30-19
STATE OF CALIFORNIA

PROJECT INFO

PLAN 3

JOB NUMBER **3036**
PROJECT MGR. RC
DRAWN BY AD
PLOT DATE: 3-6-2018

SHEET TITLE

SLAB INTERFACE PLAN ADDENDUM

SHEET NUMBER

3.1.2

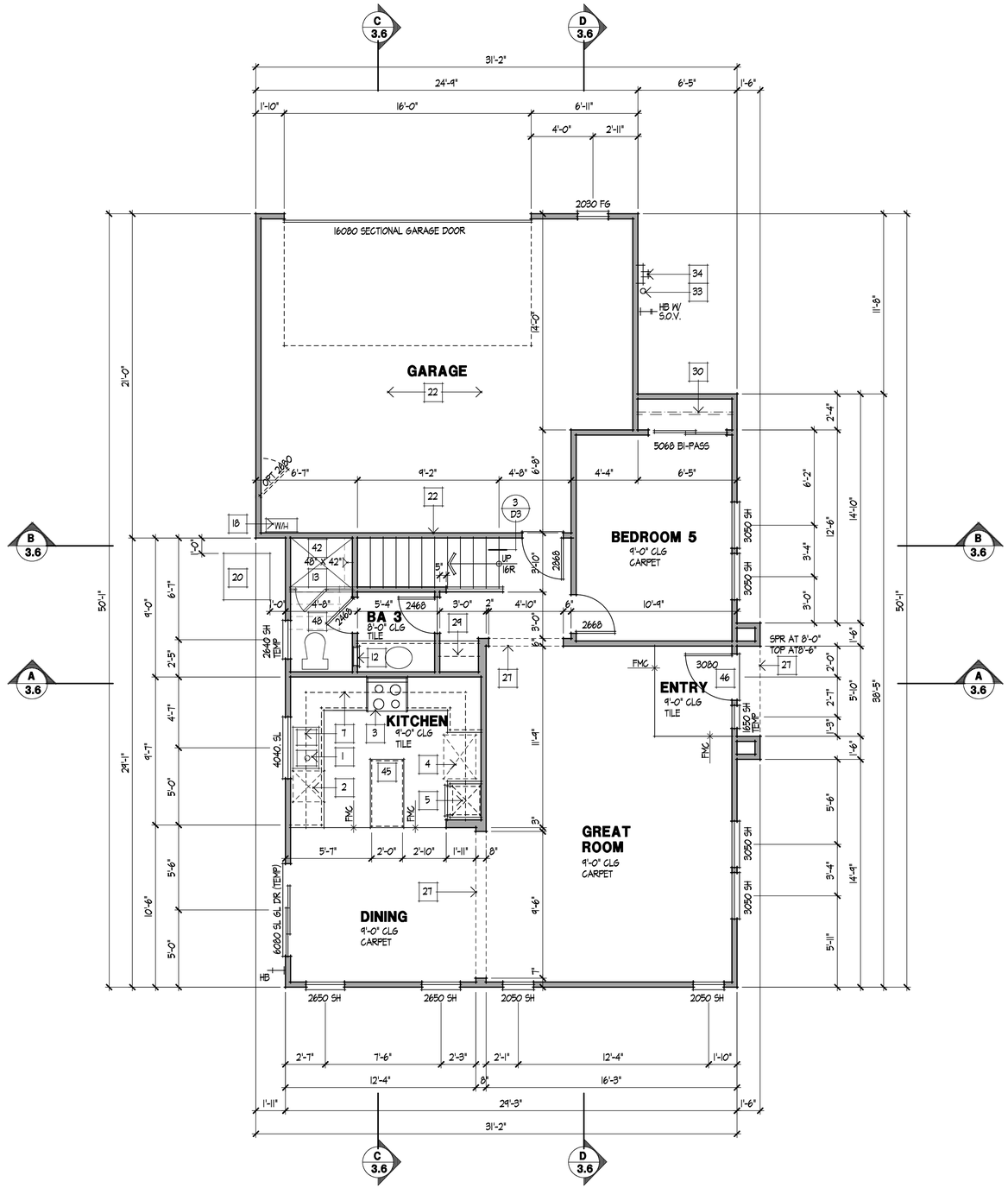

PLAN 3 SQUARE FOOTAGE

FIRST FLOOR	948	sq ft
SECOND FLOOR	1,174	sq ft
TOTAL	2,122	sq ft
GARAGE	483	sq ft

FOR ARCHITECTS USE ONLY - DIMENSIONS TAKEN TO FACE OF STUDS

FIRST FLOOR PLAN - A

SCALE: 1/4" = 1'-0"

FLOOR PLAN NOTES

1. DOUBLE SINK WITH GARBAGE DISPOSAL (REFER TO INTERIOR ELEVATIONS)
2. BUILT IN DISHWASHER WITH AIR GAP (REFER TO INTERIOR ELEV'S)
3. SLIDE-IN COOKTOP RANGE WITH EXHAUST HOOD (MIN. 100 CFM) AND MICROWAVE OVEN ABOVE AND CONVENTIONAL OVEN BELOW (VENT TO O.S.A.)
4. PROVIDE 39" REFRIGERATOR SPACE (PROVIDE PLUMBING RECESSED IN WALL FOR ICE MAKER)
5. 30" WIDE MICROWAVE OVEN OVER CONVENTIONAL OVEN (REFER TO INTERIOR ELEVATIONS, VERIFY WITH MANUFACTURERS SPEC'S)
6. PANTRY WITH ADJUSTABLE SHELVES U.N.O. (REFER TO INTERIOR ELEVATIONS)
7. LINE OF CABINET/SHELF ABOVE (REFER TO INTERIOR ELEVATIONS)
8. PROVIDE CURTAIN ROD
9. 32" X 60" FIBERGLASS TUB WITH SHOWER TO 72" A.F.F. WITH SHOWER HEAD AT +80" A.F.F.
10. 42" X 60" FIBERGLASS OVAL TUB ON 18" HIGH MOISTURE RESISTANT PLATFORM
11. 102" X 42" FIBERGLASS TUB/SHOWER WITH WAINSCOT TO 78" ABOVE FINISH FLOOR AND SHOWER HEAD AT 80" A.F.F.
12. RECESSED MEDICINE CABINET (REFER TO INTERIOR ELEVATIONS)
13. SHATTER RESISTANT SHOWER ENCLOSURE-FULLY TEMPERED OR LAMINATED SAFETY GLASS
14. WASHER SPACE (PROVIDE RECESS NICHE IN WALL FOR PLUMBING AND PROVIDE WASTE LINE/PROVIDE A "SMITTY" PAN W/ DRAIN TO BE TIED INTO A FIXTURE DRAIN BELOW WHEN WASHER IS LOCATED ON THE SECOND FLOOR)
15. DRYER SPACE (VENT TO O.S.A.)
16. LINE OF EXHAUST VENT
17. BACK DRAFT DAMPER
18. WATER HEATER PER CMC
    - PROVIDE SEISMIC STRAPS AT POINTS WITHIN THE UPPER AND LOWER ONE-THIRD OF ITS VERTICAL DIMENSION. LOWER STRAP LOCATED TO MAINTAIN MIN. 4" DISTANCE ABOVE CONTROLS.
    - PLACE W/H ON 18" HIGH RIGID PLATFORM
    - PROVIDE P.T. RELIEF VALVE TO OUTSIDE OR APPROVED DRAIN
19. FORCED AIR UNIT PER CMC
    - PROVIDE RIGID WOOD PLATFORM W/ RAG (14" MIN.)
    - PROVIDE CONDENSATE LINE TO DRAIN OUTSIDE OR APPROVED TRAPPED DRAIN(REFER TO HVAC DRAWINGS)
    - VERIFY SIZE AND CLEARANCE
    - PROVIDE COMBUSTION AIR AS REQUIRED
20. AIR CONDITIONER PAD (VARIFY SIZE WITH MANUFACTURER)
21. PEDESTAL SINK
22. INTERIOR GARAGE FINSH REFER TO SHEET GN3 OR GN4.

23A. METAL FIREPLACE (REFER TO GENERAL NOTES - DIVISION 10)

23B. GAS APPLIANCE (REFER TO GENERAL NOTES - DIVISION 10)

24. NONCOMBUSTIBLE HEARTH-MINIMUM 20" IN FRONT OF & 12" ON EACH SIDE OF FIREPLACE OPENING
25. LAUNDRY SINK
26. LINE OF SHELF (REFER TO PLAN FOR HEIGHT)
27. LINE OF SOFFIT ABOVE
28. LINE OF SHELF ABOVE (REFER TO PLAN FOR HEIGHT)
29. LINEN (REFER TO INTERIOR ELEVATIONS)
30. SHELF AND POLE
31. SHELF AND DOUBLE POLE
32. 20" x 30" MIN. (x MIN. 30" CLEAR HEADROOM) ATTIC ACCESS - CRC R807.1 (22" X 30" MIN. W/ ATTIC MTD. FAU - CMC 904.11.1)
33. GAS CO. SERVICE RISER (VERIFY LOCATION WITH UTILITY CO.)
34. ELECTRIC SERVICE MAIN. PROVIDE UFER GROUND (VERIFY LOCATION WITH UTILITY COMPANY)
35. LOW WALL (REFER TO PLAN FOR HEIGHT)
36. PROVIDE 1/2" GYPSUM BOARD AT WALLS & SOFFITS OF ENCLOSED USABLE SPACE UNDER STAIRS PER CRC SECTION R302.7
37. RAILING - REFER TO DETAIL 5/D3
38. GUARDRAIL - REFER TO DETAIL 5/D3
39. WALL MOUNTED HANDRAIL - REFER TO DETAIL 6/D3
40. LINE OF FLOOR ABOVE
41. LINE OF WALL BELOW
42. HAND MADE SHOWER PAN. SEE PLAN FOR SIZE.
43. DUCT CHASE
44. FIREPLACE FLUE PER UMC
45. KITCHEN ISLAND-SEE INTERIORS
46. DEAD BOLT AT TOP AND BOTTOM OF ENTRY DOOR, AND TOP ONLY OF INTERIOR DOORS
47. CEILING BREAK
48. WATER CLOSET (MAXIMUM 1.6 GALLONS PER FLUSH)
49. 36" HIGH STL. PIPE BUMPER
50. ELDORADO STONE (ER-602) OR APPROVED EQUAL

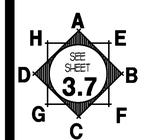

INTERIOR KEY

WALL FRAMING LEGEND

2X4 STUD WALL

2X6 STUD WALL

ALL SOFFITS SHALL BE 1'-0" BELOW CEILING U.N.O.

GENERAL PLAN NOTES

1) ALL INTERIOR DOORS TO BE HOLLOW CORE 1 3/8" THK. U.N.O. (REFER TO PLAN FOR SIZE)
2) ALL GARAGE MAN DOORS TO BE HOLLOW CORE 1 3/8" THK. EXTERIOR GRADE (REFER TO PLAN FOR SIZE)
3) ALL HOUSE TO GARAGE DOORS TO BE 20 MINUTE FIRE RATED OR SOLID CORE, SOLID WOOD OR HONEYCOMB CORE STEEL 1 3/8" THK. WITH SELF CLOSER AND SELF LATCHING AND TIGHT FITTING (REFER TO PLAN FOR SIZE)
4) ALL ENTRY DOORS AND TO BE SOLID CORE 1 3/4" THICK. (REFER TO PLAN FOR SIZE)
5) PROVIDE 100 SQ. IN. OF MAKE UP AIR AT THE LAUNDRY ROOM. (TO REPLACE AIR BEING EXHAUSTED BY DRYER VENT AND EXHAUST FAN IF APPLICABLE) PER CMC 504.3.2

KPI Inc.

KNITTER PARTNERS INTERNATIONAL, INC.
architecture & planning

1401 DOVE ST. SUITE 240
NEWPORT BEACH, CA 92660
PHONE: (949) 752-1177
FAX: (949) 752-0151
WWW.KNITTER.COM

©KNITTER PARTNERS INTERNATIONAL
ALL RIGHTS RESERVED 2013

THIS DOCUMENT IS THE PROPERTY AND COPYRIGHT OF KNITTER PARTNERS INTERNATIONAL, INC. AND SHALL NOT BE USE ON ANY OTHER WORK, BE REPRODUCED OR DISCLOSED TO OTHERS EXCEPT BY WRITTEN AUTHORIZATION FROM KNITTER PARTNERS INTERNATIONAL, INC.

NO.	DATE	REVISION

IMAGINE DEVELOPMENT L.L.C.

THE COLONY 65
LANCASTER, CALIFORNIA

LICENSED ARCHITECT
MICHAEL J. KNITTER
C10524
REN. 4-30-19
STATE OF CALIFORNIA

PROJECT INFO

PLAN 3

JOB NUMBER **3036**
PROJECT MGR. RC
DRAWN BY RC
PLOT DATE: 3-6-2018

SHEET TITLE

FIRST FLOOR PLAN

SHEET NUMBER

3.2

PLOT TIME: 11:08 AM PATH\NAME: G:\O_KPI\2013\13036 COLONY 65 PLANS\PLAN 3\3036 30 PLAN 3.DC5

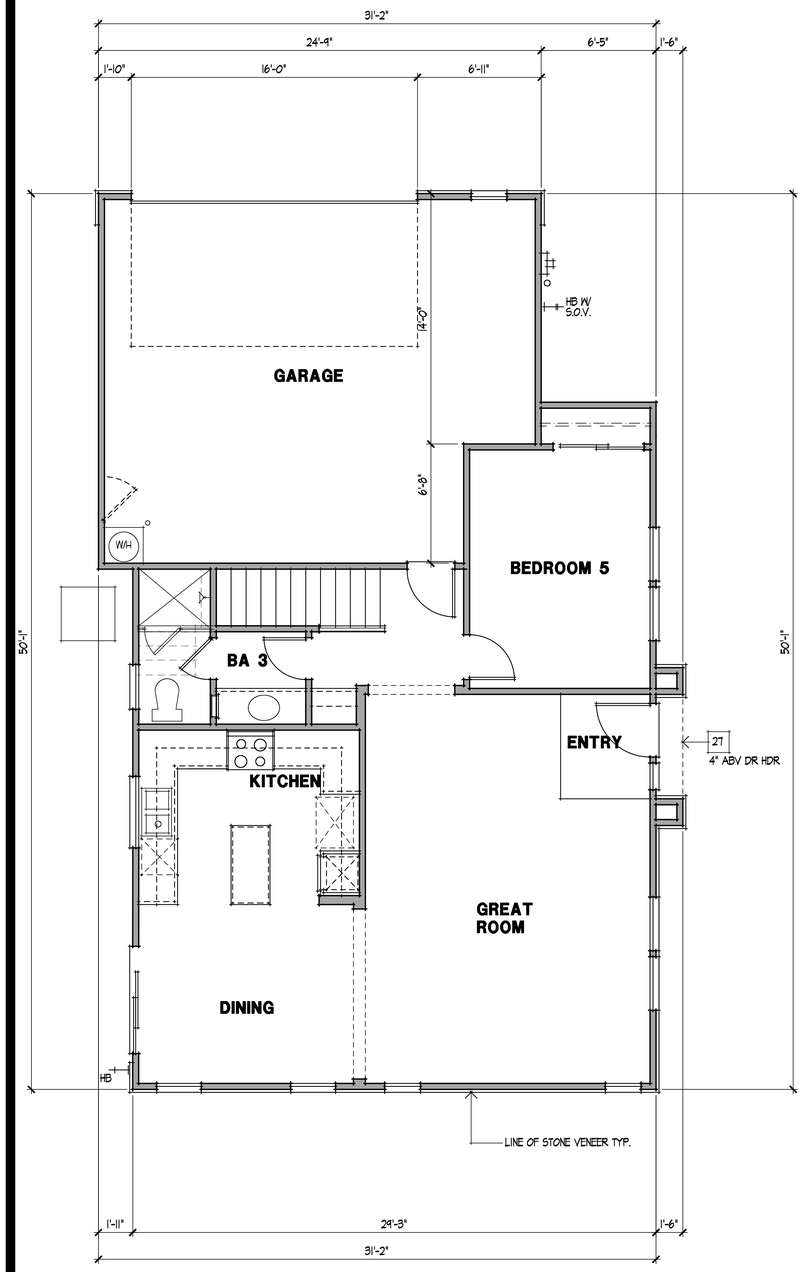

FIRST FLOOR PLAN ADDENDUM - B

SCALE: 1/4" = 1'-0"

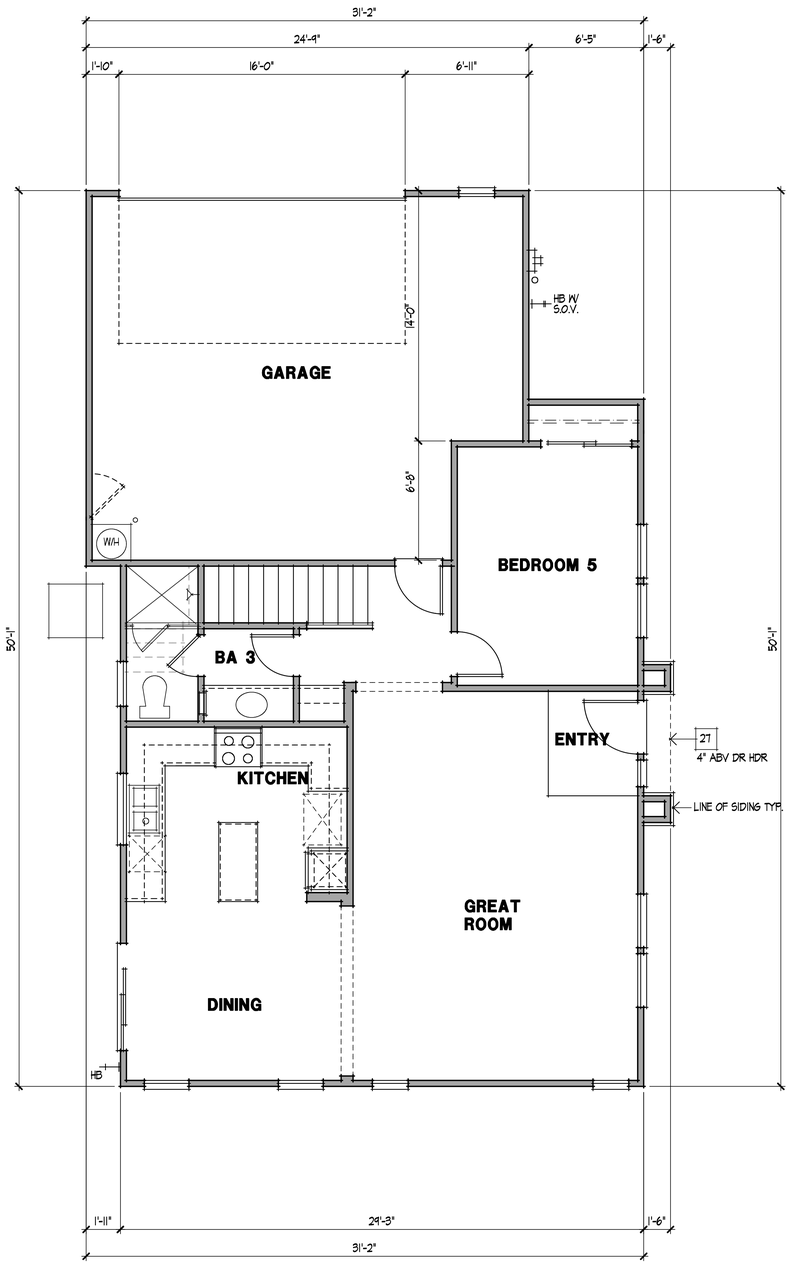

FIRST FLOOR PLAN ADDENDUM - C

SCALE: 1/4" = 1'-0"

PLOT TIME: 9:23 AM PATH\NAME: G:\O_KPI\2013\13036 COLONY 65 PLANS\PLAN 3\3036 31 PLAN 3 ADDENDA.DC5

KPI Inc.

KNITTER PARTNERS INTERNATIONAL, INC.
architecture & planning

1401 DOVE ST. SUITE 240
NEWPORT BEACH, CA 92660
PHONE: (949) 752-1177
FAX: (949) 752-0151
WWW.KNITTER.COM

©KNITTER PARTNERS INTERNATIONAL
ALL RIGHTS RESERVED 2013

THIS DOCUMENT IS THE PROPERTY AND COPYRIGHT OF KNITTER PARTNERS INTERNATIONAL, INC. AND SHALL NOT BE USE ON ANY OTHER WORK, BE REPRODUCED OR DISCLOSED TO OTHERS EXCEPT BY WRITTEN AUTHORIZATION FROM KNITTER PARTNERS INTERNATIONAL, INC.

NO.	DATE	REVISION
△		
△		
△		
△		
△		

IMAGINE DEVELOPMENT L.L.C.

THE COLONY 65
LANCASTER, CALIFORNIA

LICENSED ARCHITECT
MICHAEL J. KNITTER
C10524
REN. 4-30-19
STATE OF CALIFORNIA

PROJECT INFO

PLAN 3

JOB NUMBER **3036**
PROJECT MGR. RC
DRAWN BY AD
PLOT DATE: 3-6-2018

SHEET TITLE

FIRST FLOOR PLAN ADDENDA

SHEET NUMBER

3.2.1

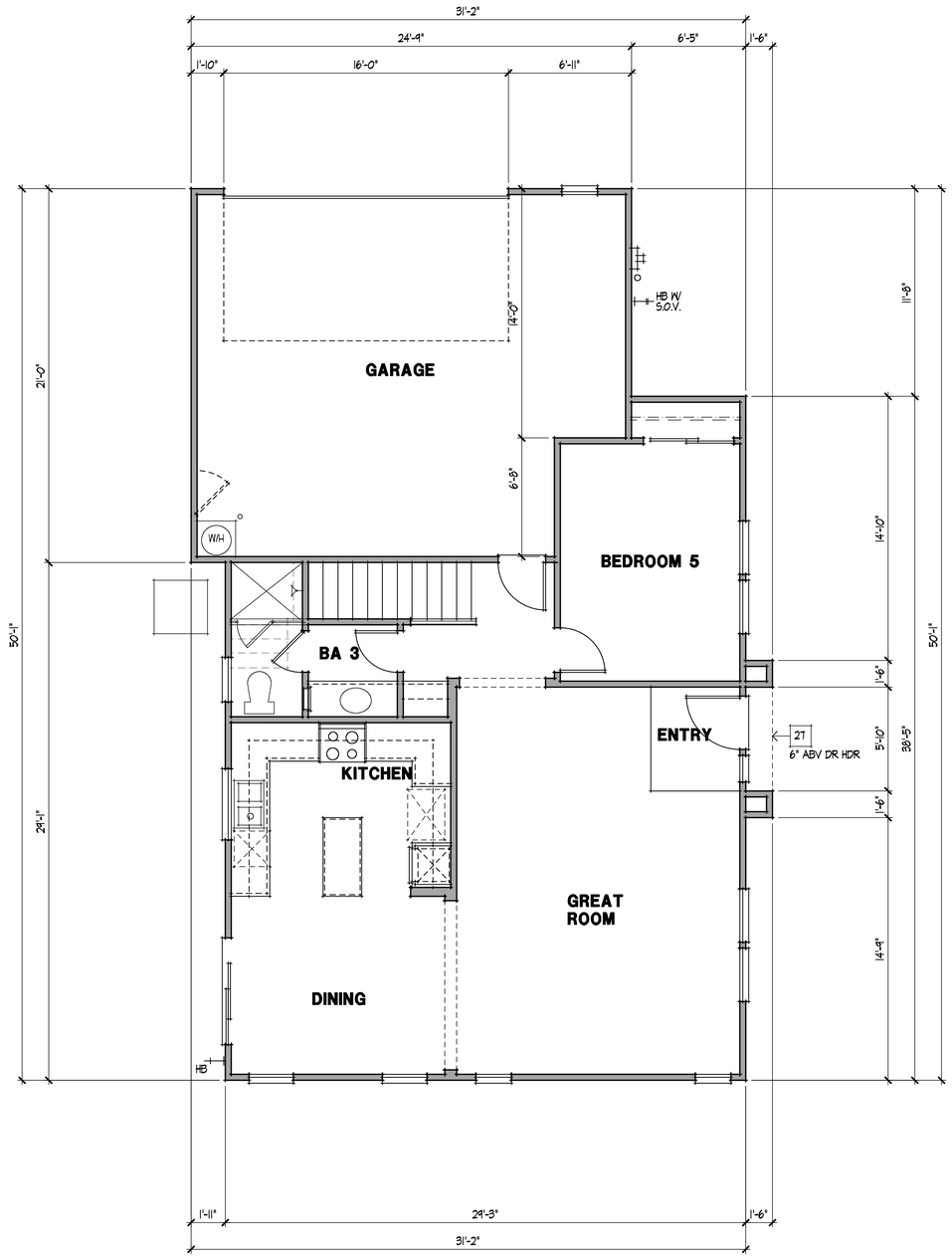

FIRST FLOOR PLAN ADDENDUM - D

SCALE: 1/4" = 1'-0"

PLOT TIME: 9:24 AM PATH\NAME: G:\O_KPI\2013\13036 COLONY 65 PLANS\PLAN 3\3036 31 PLAN 3 ADDENDUM D.DC5

KPI Inc.

KNITTER PARTNERS INTERNATIONAL, INC.
architecture & planning

1401 DOVE ST. SUITE 240
NEWPORT BEACH, CA 92660
PHONE: (949) 752-1177
FAX: (949) 752-0151
WWW.KNITTER.COM

©KNITTER PARTNERS INTERNATIONAL
ALL RIGHTS RESERVED 2013

THIS DOCUMENT IS THE PROPERTY AND COPYRIGHT OF KNITTER PARTNERS INTERNATIONAL, INC. AND SHALL NOT BE USE ON ANY OTHER WORK, BE REPRODUCED OR DISCLOSED TO OTHERS EXCEPT BY WRITTEN AUTHORIZATION FROM KNITTER PARTNERS INTERNATIONAL, INC.

NO.	DATE	REVISION
△		
△		
△		
△		
△		

IMAGINE DEVELOPMENT L.L.C.

THE COLONY 65
LANCASTER, CALIFORNIA

LICENSED ARCHITECT
MICHAEL J. KNITTER
C10524
REN. 4-30-19
STATE OF CALIFORNIA

PROJECT INFO

PLAN 3

JOB NUMBER **3036**
PROJECT MGR. RC
DRAWN BY AD
PLOT DATE: 3-6-2018

SHEET TITLE

FIRST FLOOR PLAN ADDENDUM

SHEET NUMBER

3.2.2

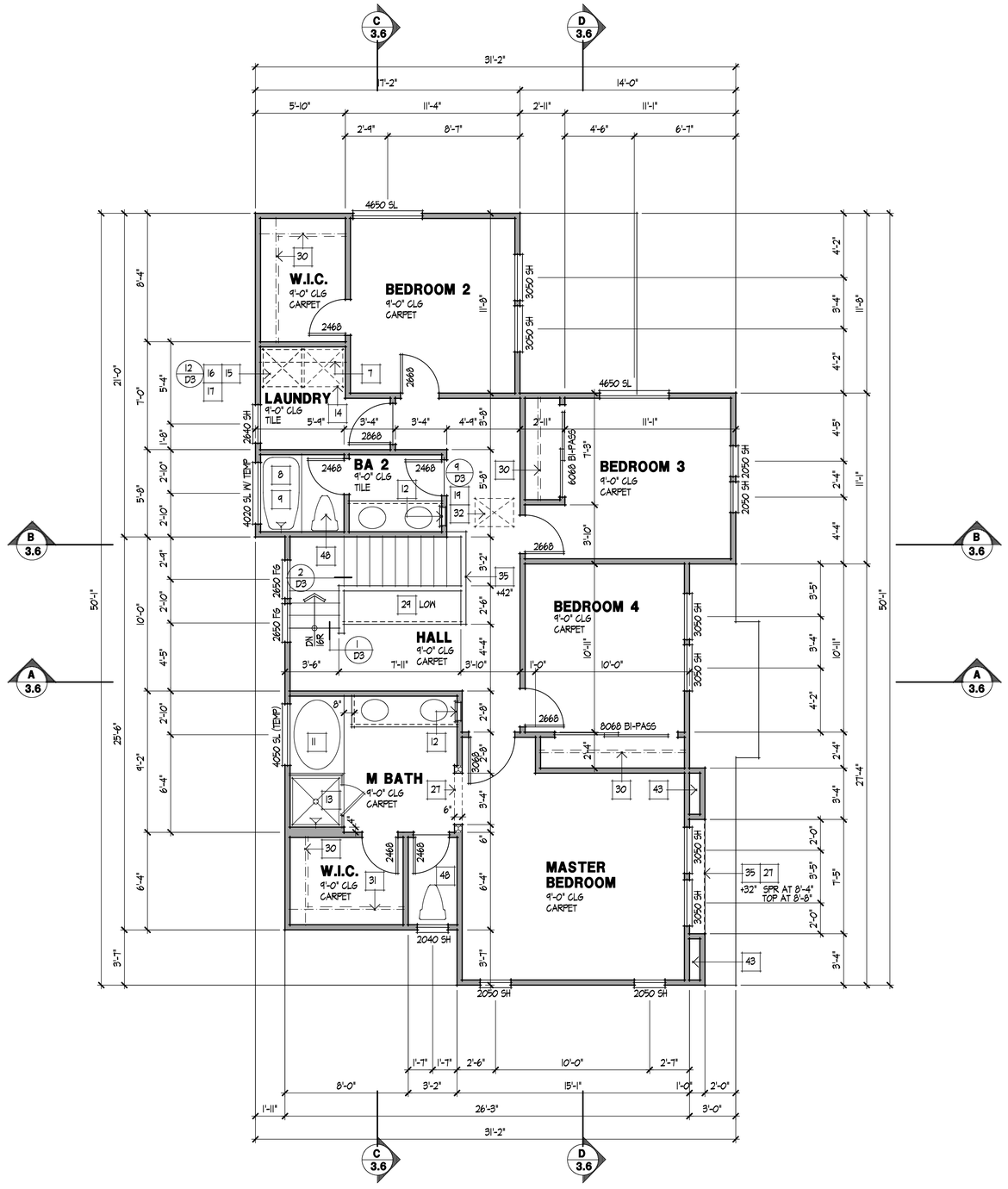

PLAN 3
SQUARE FOOTAGE

FIRST FLOOR	948	sq ft
SECOND FLOOR	1,174	sq ft
TOTAL	2,122	sq ft
GARAGE	483	sq ft

FOR ARCHITECTS USE ONLY - DIMENSIONS TAKEN TO FACE OF STUDS

SECOND FLOOR PLAN - A

SCALE: 1/4" = 1'-0"

FLOOR PLAN NOTES

1. DOUBLE SINK WITH GARBAGE DISPOSAL (REFER TO INTERIOR ELEVATIONS)
2. BUILT IN DISHWASHER WITH AIR GAP (REFER TO INTERIOR ELEV'S)
3. SLIDE-IN COOKTOP RANGE WITH EXHAUST HOOD (MIN. 100 CFM) AND MICROWAVE OVEN ABOVE AND CONVENTIONAL OVEN BELOW (VENT TO O.S.A.)
4. PROVIDE 39" REFRIGERATOR SPACE (PROVIDE PLUMBING RECESSED IN WALL FOR ICE MAKER)
5. 30" WIDE MICROWAVE OVEN OVER CONVENTIONAL OVEN (REFER TO INTERIOR ELEVATIONS, VERIFY WITH MANUFACTURERS SPEC'S)
6. PANTRY WITH ADJUSTABLE SHELVES U.N.O. (REFER TO INTERIOR ELEVATIONS)
7. LINE OF CABINET/SHELF ABOVE (REFER TO INTERIOR ELEVATIONS)
8. PROVIDE CURTAIN ROD
9. 32" X 60" FIBERGLASS TUB WITH SHOWER TO 72" A.F.F. WITH SHOWER HEAD AT +80" A.F.F.
10. 42" X 60" FIBERGLASS OVAL TUB ON 18" HIGH MOISTURE RESISTANT PLATFORM
11. 102" X 42" FIBERGLASS TUB/SHOWER WITH WAINSCOT TO 78" ABOVE FINISH FLOOR AND SHOWER HEAD AT 80" A.F.F.
12. RECESSED MEDICINE CABINET (REFER TO INTERIOR ELEVATIONS)
13. SHATTER RESISTANT SHOWER ENCLOSURE-FULLY TEMPERED OR LAMINATED SAFETY GLASS
14. WASHER SPACE (PROVIDE RECESS NICHE IN WALL FOR PLUMBING AND PROVIDE WASTE LINE/PROVIDE A "SMITTY" PAN W/ DRAIN TO BE TIED INTO A FIXTURE DRAIN BELOW WHEN WASHER IS LOCATED ON THE SECOND FLOOR)
15. DRYER SPACE (VENT TO O.S.A.)
16. LINE OF EXHAUST VENT
17. BACK DRAFT DAMPER
18. WATER HEATER PER CMC
    - PROVIDE SEISMIC STRAPS AT POINTS WITHIN THE UPPER AND LOWER ONE-THIRD OF ITS VERTICAL DIMENSION. LOWER STRAP LOCATED TO MAINTAIN MIN. 4" DISTANCE ABOVE CONTROLS.
    - PLACE W/H ON 18" HIGH RIGID PLATFORM
    - PROVIDE P.T. RELIEF VALVE TO OUTSIDE OR APPROVED DRAIN
19. FORCED AIR UNIT PER CMC
    - PROVIDE RIGID WOOD PLATFORM W/ RAG (14" MIN.)
    - PROVIDE CONDENSATE LINE TO DRAIN OUTSIDE OR APPROVED TRAPPED DRAIN(REFER TO HVAC DRAWINGS)
    - VERIFY SIZE AND CLEARANCE
    - PROVIDE COMBUSTION AIR AS REQUIRED
20. AIR CONDITIONER PAD (VARIFY SIZE WITH MANUFACTURER)
21. PEDESTAL SINK
22. INTERIOR GARAGE FINSH REFER TO SHEET GN3 OR GN4.

23A. METAL FIREPLACE (REFER TO GENERAL NOTES - DIVISION 10)

23B. GAS APPLIANCE (REFER TO GENERAL NOTES - DIVISION 10)

24. NONCOMBUSTIBLE HEARTH-MINIMUM 20" IN FRONT OF & 12" ON EACH SIDE OF FIREPLACE OPENING
25. LAUNDRY SINK
26. LINE OF SHELF (REFER TO PLAN FOR HEIGHT)
27. LINE OF SOFFIT ABOVE
28. LINE OF SHELF ABOVE (REFER TO PLAN FOR HEIGHT)
29. LINEN (REFER TO INTERIOR ELEVATIONS)
30. SHELF AND POLE
31. SHELF AND DOUBLE POLE
32. 20" x 30" MIN. (x MIN. 30" CLEAR HEADROOM) ATTIC ACCESS - CRC R807.1 (22" X 30" MIN. W/ ATTIC MTD. FAU - CMC 904.11.1)
33. GAS CO. SERVICE RISER (VERIFY LOCATION WITH UTILITY CO.)
34. ELECTRIC SERVICE MAIN, PROVIDE UFER GROUND (VERIFY LOCATION WITH UTILITY COMPANY)
35. LOW WALL (REFER TO PLAN FOR HEIGHT)
36. PROVIDE 1/2" GYPSUM BOARD AT WALLS & SOFFITS OF ENCLOSED USABLE SPACE UNDER STAIRS PER CRC SECTION R302.7
37. RAILING - REFER TO DETAIL 5/D3
38. GUARDRAIL - REFER TO DETAIL 5/D3
39. WALL MOUNTED HANDRAIL - REFER TO DETAIL 6/D3
40. LINE OF FLOOR ABOVE
41. LINE OF WALL BELOW
42. HAND MADE SHOWER PAN. SEE PLAN FOR SIZE.
43. DUCT CHASE
44. FIREPLACE FLUE PER UMC
45. KITCHEN ISLAND-SEE INTERIORS
46. DEAD BOLT AT TOP AND BOTTOM OF ENTRY DOOR, AND TOP ONLY OF INTERIOR DOORS
47. CEILING BREAK
48. WATER CLOSET (MAXIMUM 1.6 GALLONS PER FLUSH)
49. 36" HIGH STL. PIPE BUMPER
50. ELDORADO STONE (ER-602) OR APPROVED EQUAL

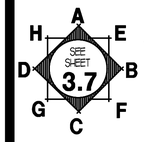

INTERIOR KEY

WALL FRAMING LEGEND

2X4 STUD WALL

2X6 STUD WALL

ALL SOFFITS SHALL BE 1'-0" BELOW CEILING U.N.O.

GENERAL PLAN NOTES

1) ALL INTERIOR DOORS TO BE HOLLOW CORE 1 3/8" THK. U.N.O. (REFER TO PLAN FOR SIZE)
2) ALL GARAGE MAN DOORS TO BE HOLLOW CORE 1 3/8" THK. EXTERIOR GRADE (REFER TO PLAN FOR SIZE)
3) ALL HOUSE TO GARAGE DOORS TO BE 20 MINUTE FIRE RATED OR SOLID CORE, SOLID WOOD OR HONEYCOMB CORE STEEL 1 3/8" THK. WITH SELF CLOSER AND SELF LATCHING AND TIGHT FITTING (REFER TO PLAN FOR SIZE)
4) ALL ENTRY DOORS AND TO BE SOLID CORE 1 3/4" THICK. (REFER TO PLAN FOR SIZE)
5) PROVIDE 100 SQ. IN. OF MAKE UP AIR AT THE LAUNDRY ROOM. (TO REPLACE AIR BEING EXHAUSTED BY DRYER VENT AND EXHAUST FAN IF APPLICABLE) PER CMC 504.3.2

KPI Inc.

KNITTER PARTNERS INTERNATIONAL, INC.
architecture & planning

1401 DOVE ST. SUITE 240
NEWPORT BEACH, CA 92660
PHONE: (949) 752-1177
FAX: (949) 752-0151
WWW.KNITTER.COM

©KNITTER PARTNERS INTERNATIONAL
ALL RIGHTS RESERVED 2013

THIS DOCUMENT IS THE PROPERTY AND COPYRIGHT OF KNITTER PARTNERS INTERNATIONAL, INC. AND SHALL NOT BE USE ON ANY OTHER WORK, BE REPRODUCED OR DISCLOSED TO OTHERS EXCEPT BY WRITTEN AUTHORIZATION FROM KNITTER PARTNERS INTERNATIONAL, INC.

NO.	DATE	REVISION
△		
△		
△		
△		
△		

IMAGINE DEVELOPMENT L.L.C.

THE COLONY 65
LANCASTER, CALIFORNIA

LICENSED ARCHITECT
MICHAEL J. KNITTER
C10524
REN. 4-30-19
STATE OF CALIFORNIA

PROJECT INFO

PLAN 3

JOB NUMBER **3036**
PROJECT MGR. RC
DRAWN BY RC
PLOT DATE: 3-6-2018

SHEET TITLE

SECOND FLOOR PLAN

SHEET NUMBER

3.3

PLOT TIME: 11:08 AM PATH\NAME: G:\O_KPI\2013\13036 COLONY 65 PLANS\PLAN 3\3036 30 PLAN 3.DC5

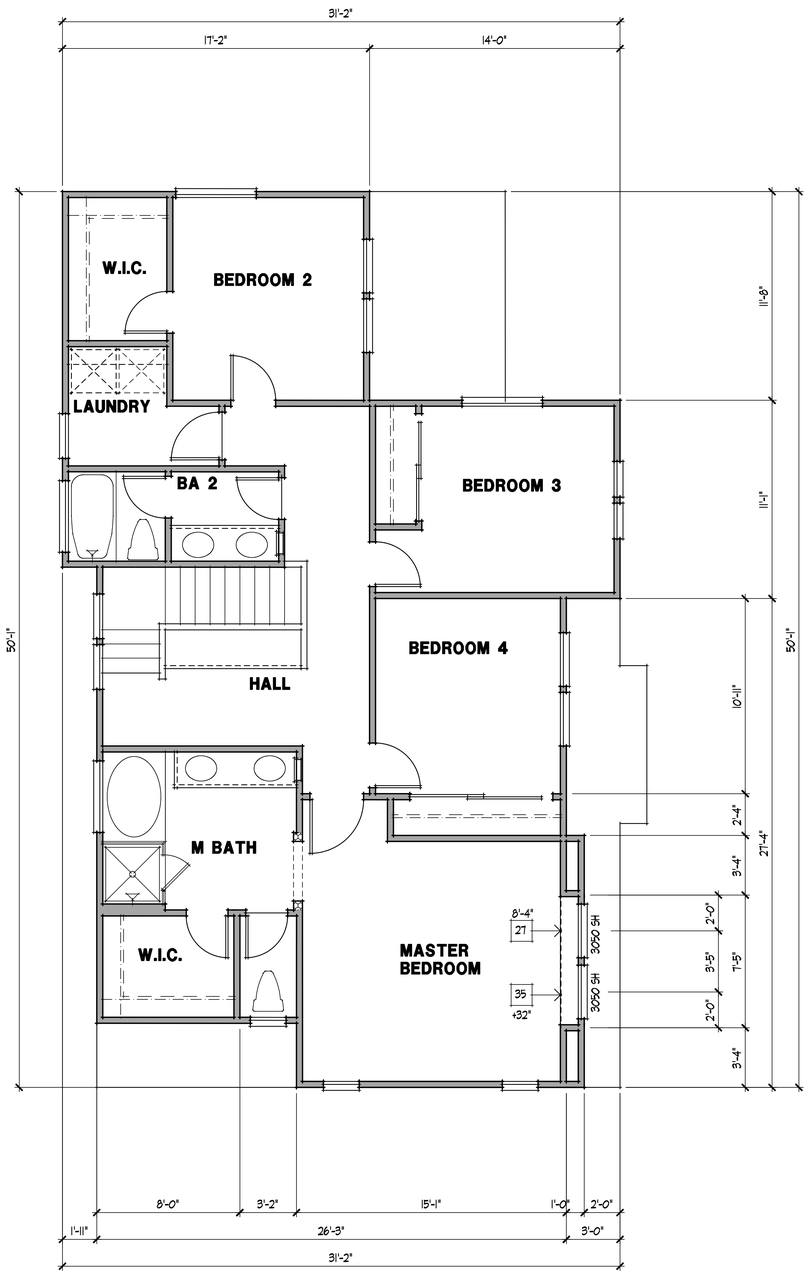

SECOND FLOOR PLAN ADDENDUM - B

SCALE: 1/4" = 1'-0"

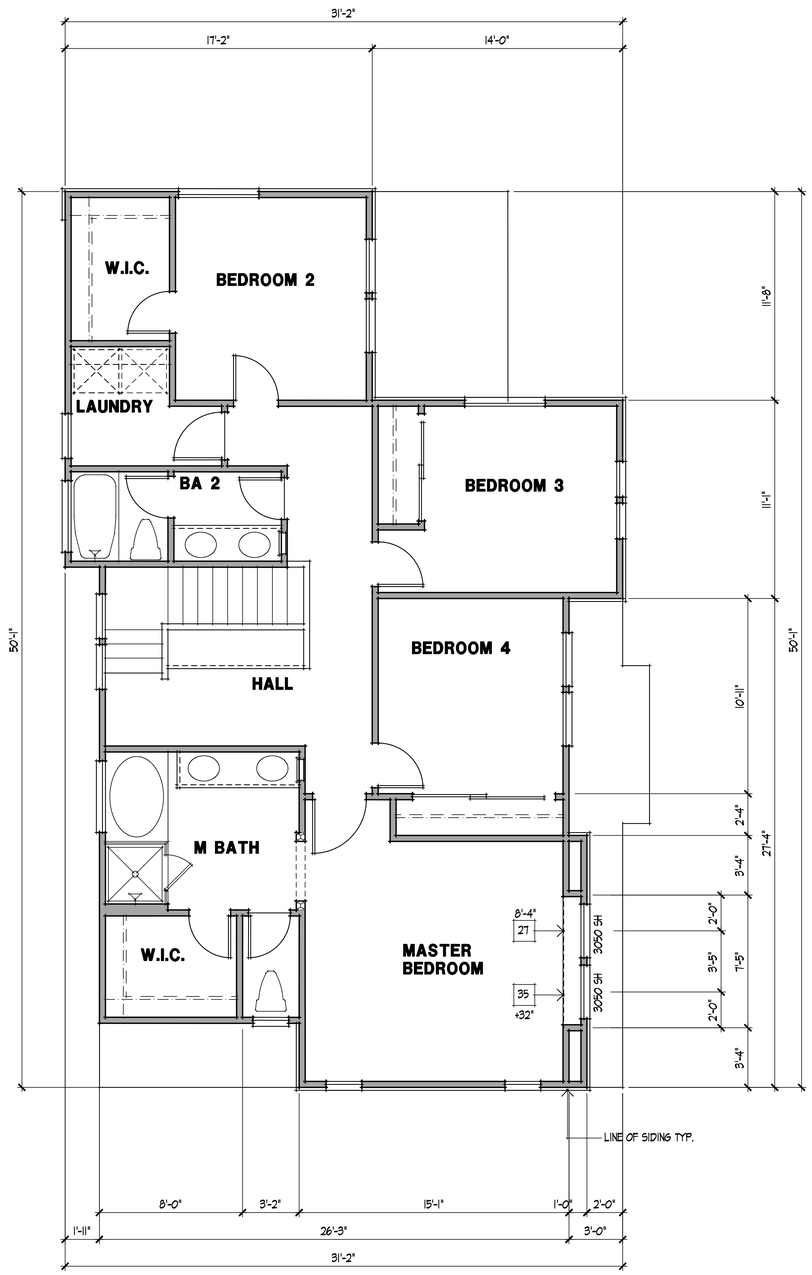

SECOND FLOOR PLAN ADDENDUM - C

SCALE: 1/4" = 1'-0"

PLOT TIME: 9:23 AM PATH\NAME: G:\O_KPI\2013\13036 COLONY 65 PLANS\PLAN 3\3036 31 PLAN 3 ADDENDA.DC5

KPI Inc.

KNITTER PARTNERS INTERNATIONAL, INC.
architecture & planning

1401 DOVE ST. SUITE 240
NEWPORT BEACH, CA 92660
PHONE: (949) 752-1177
FAX: (949) 752-0151
WWW.KNITTER.COM

©KNITTER PARTNERS INTERNATIONAL
ALL RIGHTS RESERVED 2013

THIS DOCUMENT IS THE PROPERTY AND COPYRIGHT OF KNITTER PARTNERS INTERNATIONAL, INC. AND SHALL NOT BE USE ON ANY OTHER WORK, BE REPRODUCED OR DISCLOSED TO OTHERS EXCEPT BY WRITTEN AUTHORIZATION FROM KNITTER PARTNERS INTERNATIONAL, INC.

NO.	DATE	REVISION
△		
△		
△		
△		
△		

IMAGINE DEVELOPMENT L.L.C.

THE COLONY 65
LANCASTER, CALIFORNIA

LICENSED ARCHITECT
MICHAEL J. KNITTER
C10524
REN. 4-30-19
STATE OF CALIFORNIA

PROJECT INFO

PLAN 3

JOB NUMBER **3036**
PROJECT MGR. RC
DRAWN BY AD
PLOT DATE: 3-6-2018

SHEET TITLE

SECOND FLOOR PLAN ADDENDA

SHEET NUMBER

3.3.1

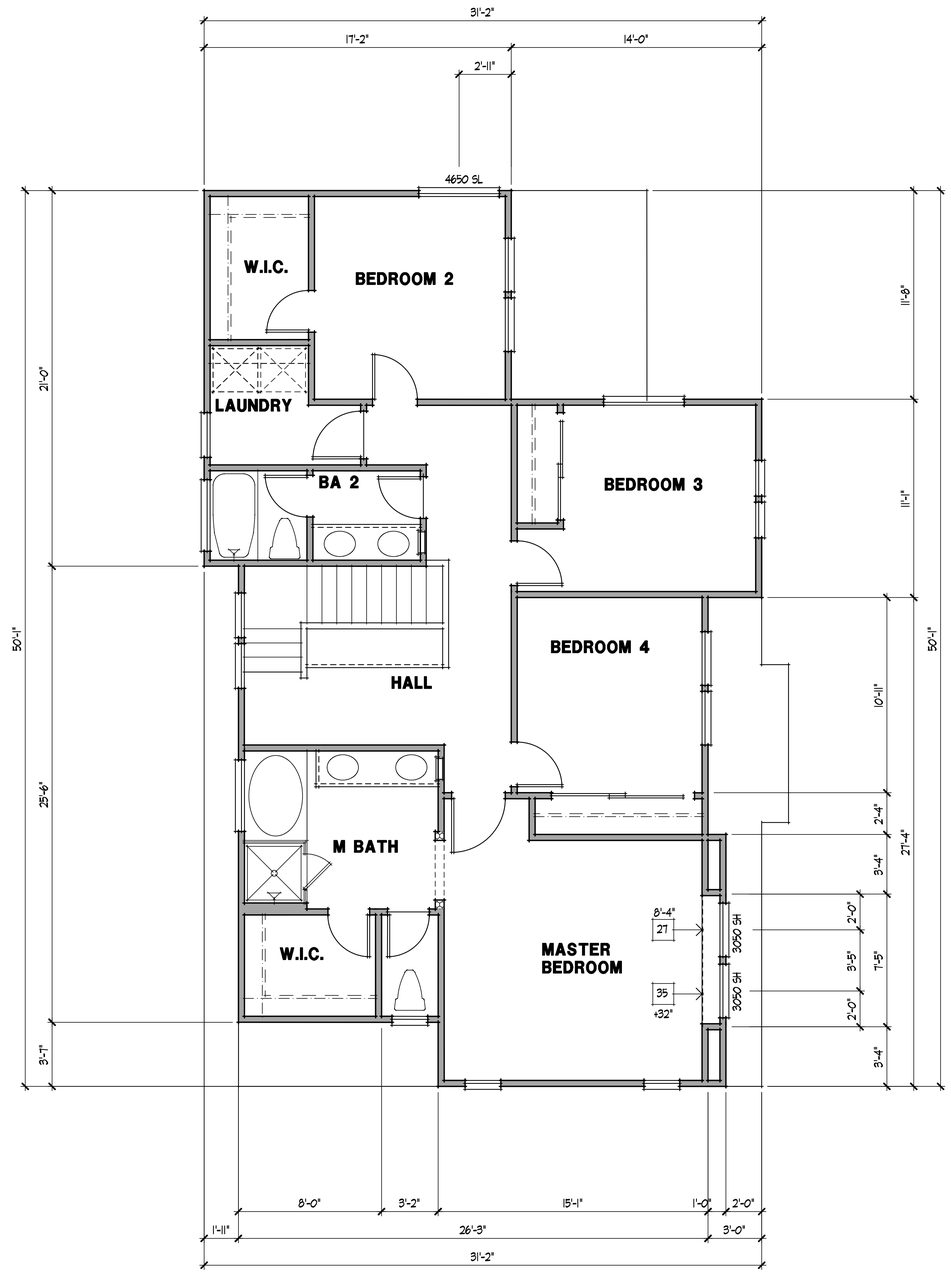

SECOND FLOOR PLAN ADDENDUM - D

SCALE: 1/4" = 1'-0"

KPI Inc.

KNITTER PARTNERS INTERNATIONAL, INC.
architecture & planning

1401 DOVE ST. SUITE 240
NEWPORT BEACH, CA 92660
PHONE: (949) 752-1177
FAX: (949) 752-0151
WWW.KNITTER.COM

©KNITTER PARTNERS INTERNATIONAL
ALL RIGHTS RESERVED 2013

THIS DOCUMENT IS THE PROPERTY AND COPYRIGHT OF KNITTER PARTNERS INTERNATIONAL, INC. AND SHALL NOT BE USE ON ANY OTHER WORK, BE REPRODUCED OR DISCLOSED TO OTHERS EXCEPT BY WRITTEN AUTHORIZATION FROM KNITTER PARTNERS INTERNATIONAL, INC.

NO.	DATE	REVISION
△		
△		
△		
△		
△		

IMAGINE DEVELOPMENT L.L.C.

THE COLONY 65
LANCASTER, CALIFORNIA

LICENSED ARCHITECT
MICHAEL J. KNITTER
C10524
REN. 4-30-19
STATE OF CALIFORNIA

PROJECT INFO

PLAN 3

JOB NUMBER **3036**
PROJECT MGR. RC
DRAWN BY AD
PLOT DATE: 3-6-2018

SHEET TITLE

SECOND FLOOR PLAN ADDENDUM

SHEET NUMBER

3.3.2

PLOT TIME: 9:24 AM PATH\NAME: G:\0_KPI\2013\13036 COLONY 65 PLANS\PLAN 3\3036 31 PLAN 3 ADDENDUM D.DC5

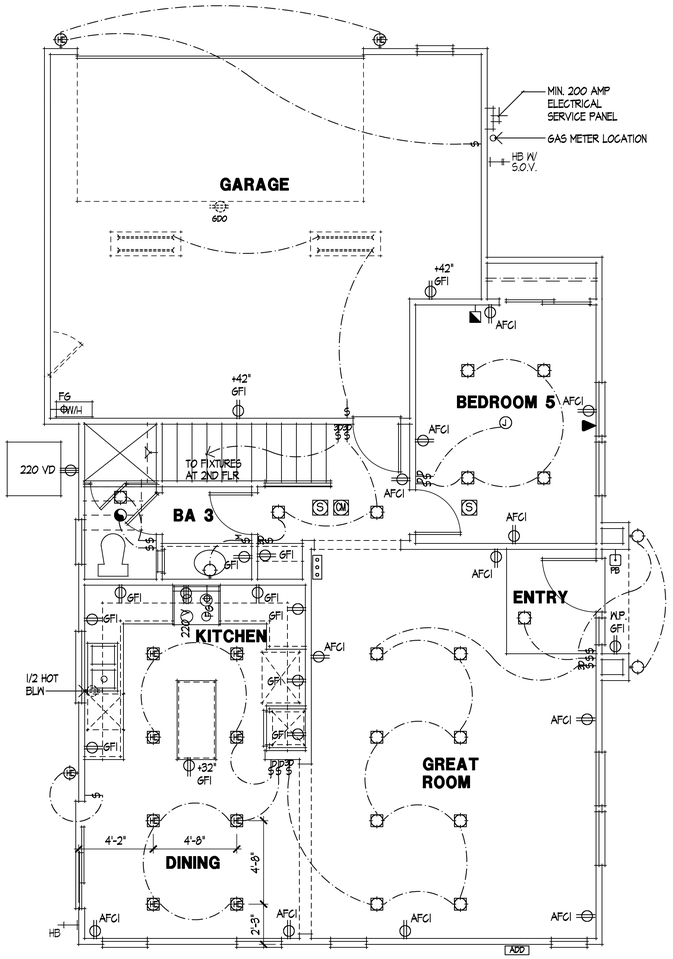

FIRST FLOOR UTILITY PLAN - A

UTILITY SYMBOLS

- 110 VOLT OUTLET AT +12" ABOVE FLOOR UNO
- AFCI — 110 VOLT OUTLET WITH ARC FAULT CIRCUIT INTERRUPTER AT +12" ABOVE FLOOR UNO
- 110 VOLT OUTLET, SWITCH CONTROLLED 1/2 HOT
- 110 VOLT OUTLET, WITHIN CABINET
- 220 V — 220 VOLT OUTLET
- 220 V D — 220 VOLT OUTLET WITH DISCONNECT
- 110 VOLT FLOOR OUTLET WITH COVER
- W.P. GFI — 110 VOLT WATER PROOF OUTLET WITH GFI
- TWO POLE LIGHT SWITCH AT +36" ABOVE FLOOR, +8" ABOVE COUNTER
- 3 — 3 WAY LIGHT SWITCH
- 4 — 4 WAY LIGHT SWITCH
- D — TWO POLE LIGHT SWITCH WITH DIMMER
- M — TWO POLE LIGHT SWITCH WITH MOTION SENSOR
- PB — DOOR CHIME PUSH BUTTON
- DOOR CHIME
- T — THERMOSTAT, VERIFY LOCATION WITH HVAC DRAWING
- TELEPHONE OUTLET
- TELEVISION ANTENNA JACK
- SURFACE MOUNTED INCANDESCENT LIGHT FIXTURE
- V.P. — VAPOR PROOF RECESSED INCANDESCENT FIXTURE
- HANGING INCANDESCENT LIGHT FIXTURE
- TRACK LIGHT FIXTURE
- EXHAUST FAN WITH LIGHT
- WALL MOUNTED INCANDESCENT LIGHT FIXTURE
- RECESSED INCANDESCENT LIGHT FIXTURE
- EXHAUST FAN WITH LIGHT, SWITCHED SEPARATELY
- J — JUNCTION BOX WITH COVER OR ADAPTOR AS REQUIRED
- SURFACE MOUNTED FLUORESCENT LIGHT FIXTURE
- SURFACE MOUNTED HIGH EFFICACY LIGHT FIXTURE
- WALL MOUNTED HIGH EFFICACY LIGHT FIXTURE
- RECESSED HIGH EFFICACY LIGHT FIXTURE
- RECESSED EXHAUST FAN, SWITCH CONTROLLED
- S — SMOKE DETECTOR, ICBO APPROVED, CEILING MOUNTED U.N.O.
- SCO — COMBINATION SMOKE/ CARBON MONOXIDE DETECTOR, ICBO APPROVED, CEILING MOUNTED U.N.O.
- FG — FUEL GAS OUTLET
- FIREPLACE KEY VALVE (LOOSE)
- HB — HOSE BIBB WITH NON-REMOVABLE TYPE BACK FLOW PREVENTION DEVICE
- HBV — HOSE BIBB WITH SHUT-OFF VALVE AND NON-REMOVABLE TYPE BACK FLOW PREVENTION DEVICE
- ELECTRONIC SECURITY
- COMPUTER DATA LINE
- ADD — ILLUMINATED ADDRESS FIXTURE-VISIBLE FROM STREET
- PC — PHOTO CONTROL

ELECTRICAL NOTES

1. LIGHT FIXTURES IN CLOTHES CLOSET SHALL BE PLACED MINIMUM OF 12" AWAY FROM WALLS & MINIMUM OF 12" AWAY FROM CLOTHES PER CEC. ART. 410.8
2. PROVIDE "BROAN-MODEL 5903XENIO" SMARTSENSE INTELLIGENT VENTILATION SYSTEM IN EACH BATHROOM (0.3 - 0.7 SONES). PROVIDE DEEP DEVICE ELECTRICAL BOXES AND 6" DUCT FOR SYSTEM. (TO COMPLY W ASHRAE 62.2)
3. SMOKE DETECTOR PER CBC SEC. 907.2.
   - SHALL BE INSTALLED ON EACH FLOOR IN ACCORDANCE WITH MFR'S LISTING
   - SHALL BE MOUNTED ON THE CEILING OR WALL AT A CENTRAL POINT OR AREA GIVING ACCESS TO ROOMS USED FOR SLEEPING
   - SHALL BE INSTALLED IN CLOSE PROXIMITY TO THE STAIRS GIVING ACCESS TO ROOMS USED FOR SLEEPING
   - SHALL BE HARD WIRED, INSTALLED WITH A BATTERY BACKUP AND SHALL EMIT A SIGNAL WHEN BATTERY IS LOW
   - SHALL SOUND AN ALARM AUDIBLE IN ALL SLEEPING AREAS WITHIN A UNIT

3A. CARBON MONOXIDE ALARMS PER CRC SECTION R315:
   - SHALL BE INSTALLED OUTSIDE OF EACH SEPARATE DWELLING UNIT SLEEPING AREA IN THE IMMEDIATE VICINITY OF THE BEDROOM(S) AND AT EVERY LEVEL OF A DWELLING UNIT INCLUDING BASEMENT IN ACCORDANCE WITH MANUFACTURERS LISTING
   - SHALL BE INSTALLED IN DWELLING UNITS AND IN SLEEPING UNITS WITH FUEL-BURNING APPLIANCES OR WITH ATTACHED GARAGES.
   - SHALL BE HARD WIRED, INSTALLED WITH A BATTERY BACKUP.
   - TWO OR MORE ALARMS SHALL BE INTERCONNECTED.
4. PROVIDE OUTLET AND LIGHTS IN ATTICS CONTAINING FAU'S
5. PROVIDE CONVENIENCE OUTLET IN EACH BATHROOM, POWDER AND LAUNDRY WITHIN 3 FT. OF BASIN EDGE, CEC ART. 210.52(D). SUCH OUTLETS SHALL BE APPROVED GROUND FAULT CIRCUIT PROTECTED (GFI) CEC ART. 210.8(A)). OUTLETS SHALL BE SUPPLIED BY A MINIMUM OF ONE 20-AMPERE BRANCH CIRCUIT. SUCH CIRCUITS SHALL HAVE NO OTHER OUTLETS. THIS CIRCUIT MAY SERVE MORE THAN ONE BATHROOM, CEC ART. 210.11(C)3.
6. PROVIDE AT LEAST ONE 125 VOLT SINGLE PHASE RECEPTACLE IN GARAGE & OUTDOORS, CEC ART. 210.52(G). THIS CIRCUIT SHALL BE GROUND FAULT CIRCUIT PROTECTED (GFI) & WATERPROOF WHEN EXTERIOR, CEC. ART. 210.8(A) 2, 3.
7. ALL KITCHEN 125VOLT SINGLE PHASE 15 & 20 AMP RECEPTACLES SERVING COUNTER TOP SURFACE SHALL BE GROUND FAULT CIRCUIT INTERRUPTED (GFI), CEC ART. 210.8(A) 6.
8. PERMANENTLY INSTALLED LUMINARIES IN KITCHENS SHALL BE HIGH EFFICACY LUMINARIES AND UP TO 50 PERCENT OF THE TOTAL RATED WATTAGES CAN BE NON HIGH EFFICACY LUMINARIES CONTROLLED WITH SEPARATE SWICH, PER ENERGY CODE SEC. 150(K)
9. PROVIDE 100 SQ. IN. OF MAKE UP AIR AT THE LAUNDRY ROOM. (TO REPLACE AIR BEING EXHAUSTED BY DRYER VENT AND EXHAUST FAN IF APPLICABLE), CMC SEC. 504.3.2.
10. FAMILY ROOMS, DINING ROOM, LIVING ROOMS, PARLORS, LIBRARIES, DENS, BEDROOMS, SUNROOMS, RECREATION ROOMS, CLOSETS, HALLWAYS, OR SIMILAR ROOMS OR AREAS, 15 & 20 AMP OUTLETS SHALL BE ARC FAULT CIRCUIT INTERRUPTED, COMBINATION TYPE AFCI REQUIRED PER CEC ART.210.12(B)
11. ALL EXHAUST FANS MUST BE SPECIFIED AT A NOISE RATING OF A MAXIMUM 1 "SONE" (FOR CONTINUOUS USE CALCULATION) OR 3 "SONE" (FOR INTERMITTENT USE CALCULATION)
12. PROVIDE HUMIDISTAT AT ALL FANS LOCATED IN ALL BATHROOMS WITH A BATHTUB, SHOWER OR TUB/SHOWER COMBINATION.

KPI Inc.
KNITTER PARTNERS INTERNATIONAL, INC.
architecture & planning
1401 DOVE ST. SUITE 240
NEWPORT BEACH, CA 92660
PHONE: (949) 752-1177
FAX: (949) 752-0151
WWW.KNITTER.COM

©KNITTER PARTNERS INTERNATIONAL
ALL RIGHTS RESERVED 2013

THIS DOCUMENT IS THE PROPERTY AND COPYRIGHT OF KNITTER PARTNERS INTERNATIONAL, INC. AND SHALL NOT BE USE ON ANY OTHER WORK, BE REPRODUCED OR DISCLOSED TO OTHERS EXCEPT BY WRITTEN AUTHORIZATION FROM KNITTER PARTNERS INTERNATIONAL, INC.

NO.	DATE	REVISION

IMAGINE DEVELOPMENT L.L.C.

THE COLONY 65
LANCASTER, CALIFORNIA

LICENSED ARCHITECT
MICHAEL J. KNITTER
C10524
REN. 4-30-19
STATE OF CALIFORNIA

PROJECT INFO

PLAN 3

JOB NUMBER **3036**
PROJECT MGR. RC
DRAWN BY RC
PLOT DATE: 3-6-2018

SHEET TITLE

FIRST FLOOR UTILITY PLAN

SHEET NUMBER

3.4

PLOT TIME: 11:08 AM PATH\NAME: G:\O_KPI\2013\13036 COLONY 65 PLANS\PLAN 3\3036 30 PLAN 3.DC5

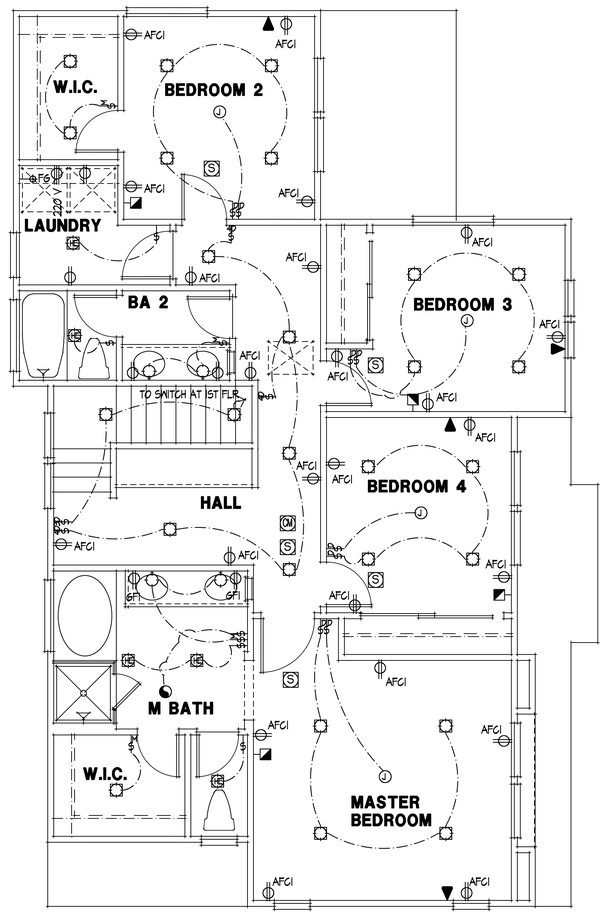

SECOND FLOOR UTILITY PLAN - A

UTILITY SYMBOLS

- 110 VOLT OUTLET AT +12" ABOVE FLOOR UNO
- AFCI — 110 VOLT OUTLET WITH ARC FAULT CIRCUIT INTERRUPTER AT +12" ABOVE FLOOR UNO
- 110 VOLT OUTLET, SWITCH CONTROLLED 1/2 HOT
- 110 VOLT OUTLET, WITHIN CABINET
- 220 V — 220 VOLT OUTLET
- 220 V D — 220 VOLT OUTLET WITH DISCONNECT
- 110 VOLT FLOOR OUTLET WITH COVER
- W.P. GFI — 110 VOLT WATER PROOF OUTLET WITH GFI
- TWO POLE LIGHT SWITCH AT +36" ABOVE FLOOR, +8" ABOVE COUNTER
- 3 — 3 WAY LIGHT SWITCH
- 4 — 4 WAY LIGHT SWITCH
- D — TWO POLE LIGHT SWITCH WITH DIMMER
- M — TWO POLE LIGHT SWITCH WITH MOTION SENSOR
- PB — DOOR CHIME PUSH BUTTON
- DOOR CHIME
- T — THERMOSTAT, VERIFY LOCATION WITH HVAC DRAWING
- TELEPHONE OUTLET
- TELEVISION ANTENNA JACK
- SURFACE MOUNTED INCANDESCENT LIGHT FIXTURE
- V.P. — VAPOR PROOF RECESSED INCANDESCENT FIXTURE
- HANGING INCANDESCENT LIGHT FIXTURE
- TRACK LIGHT FIXTURE
- EXHAUST FAN WITH LIGHT
- WALL MOUNTED INCANDESCENT LIGHT FIXTURE
- RECESSED INCANDESCENT LIGHT FIXTURE
- EXHAUST FAN WITH LIGHT, SWITCHED SEPARATELY
- J — JUNCTION BOX WITH COVER OR ADAPTOR AS REQUIRED
- SURFACE MOUNTED FLUORESCENT LIGHT FIXTURE
- SURFACE MOUNTED HIGH EFFICACY LIGHT FIXTURE
- WALL MOUNTED HIGH EFFICACY LIGHT FIXTURE
- RECESSED HIGH EFFICACY LIGHT FIXTURE
- RECESSED EXHAUST FAN, SWITCH CONTROLLED
- S — SMOKE DETECTOR, ICBO APPROVED, CEILING MOUNTED U.N.O.
- SCM — COMBINATION SMOKE/ CARBON MONOXIDE DETECTOR, ICBO APPROVED, CEILING MOUNTED U.N.O.
- FG — FUEL GAS OUTLET
- FIREPLACE KEY VALVE (LOOSE)
- HB — HOSE BIBB WITH NON-REMOVABLE TYPE BACK FLOW PREVENTION DEVICE
- HBV — HOSE BIBB WITH SHUT-OFF VALVE AND NON-REMOVABLE TYPE BACK FLOW PREVENTION DEVICE
- ELECTRONIC SECURITY
- COMPUTER DATA LINE
- ADD — ILLUMINATED ADDRESS FIXTURE-VISIBLE FROM STREET
- PC — PHOTO CONTROL

ELECTRICAL NOTES

1. LIGHT FIXTURES IN CLOTHES CLOSET SHALL BE PLACED MINIMUM OF 12" AWAY FROM WALLS & MINIMUM OF 12" AWAY FROM CLOTHES PER CEC. ART. 410.8
2. PROVIDE "BROAN-MODEL S99TXENIO" SMARTSENSE INTELLIGENT VENTILATION SYSTEM IN EACH BATHROOM (0.3 - 0.7 SONES). PROVIDE DEEP DEVICE ELECTRICAL BOXES AND 6" DUCT FOR SYSTEM. (TO COMPLY IN ASHRAE 62.2)
3. SMOKE DETECTOR PER CBC SEC. 907.2:
   - SHALL BE INSTALLED ON EACH FLOOR IN ACCORDANCE WITH MFR'S LISTING
   - SHALL BE MOUNTED ON THE CEILING OR WALL AT A CENTRAL POINT OR AREA GIVING ACCESS TO ROOMS USED FOR SLEEPING
   - SHALL BE INSTALLED IN CLOSE PROXIMITY TO THE STAIRS GIVING ACCESS TO ROOMS USED FOR SLEEPING
   - SHALL BE HARD WIRED, INSTALLED WITH A BATTERY BACKUP AND SHALL EMIT A SIGNAL WHEN BATTERY IS LOW
   - SHALL SOUND AN ALARM AUDIBLE IN ALL SLEEPING AREAS WITHIN A UNIT

3A. CARBON MONOXIDE ALARMS PER CRC SECTION R315:
   - SHALL BE INSTALLED OUTSIDE OF EACH SEPARATE DWELLING UNIT SLEEPING AREA IN THE IMMEDIATE VICINITY OF THE BEDROOM(S) AND AT EVERY LEVEL OF A DWELLING UNIT INCLUDING BASEMENT IN ACCORDANCE WITH MANUFACTURERS LISTING
   - SHALL BE INSTALLED IN DWELLING UNITS AND IN SLEEPING UNITS WITH FUEL-BURNING APPLIANCES OR WITH ATTACHED GARAGES.
   - SHALL BE HARD WIRED, INSTALLED WITH A BATTERY BACKUP.
   - TWO OR MORE ALARMS SHALL BE INTERCONNECTED.
4. PROVIDE OUTLET AND LIGHTS IN ATTICS CONTAINING FAU'S
5. PROVIDE CONVENIENCE OUTLET IN EACH BATHROOM, POWDER AND LAUNDRY WITHIN 3 FT. OF BASIN EDGE, CEC ART. 210.52(D). SUCH OUTLETS SHALL BE APPROVED GROUND FAULT CIRCUIT PROTECTED (GFI.) CEC ART. 210.8(A)1. OUTLETS SHALL BE SUPPLIED BY A MINIMUM OF ONE 20-AMPERE BRANCH CIRCUIT. SUCH CIRCUITS SHALL HAVE NO OTHER OUTLETS. THIS CIRCUIT MAY SERVE MORE THAN ONE BATHROOM, CEC ART. 210.11(C)3.
6. PROVIDE AT LEAST ONE 125 VOLT SINGLE PHASE RECEPTACLE IN GARAGE & OUTDOORS, CEC ART. 210.52(G). THIS CIRCUIT SHALL BE GROUND FAULT CIRCUIT PROTECTED (GFI) & WATERPROOF WHEN EXTERIOR, CEC. ART. 210.8(A) 2, 3.
7. ALL KITCHEN 125VOLT SINGLE PHASE 15 & 20 AMP RECEPTACLES SERVING COUNTER TOP SURFACE SHALL BE GROUND FAULT CIRCUIT INTERRUPTED (GFI), CEC ART. 210.8(A) 6.
8. PERMANENTLY INSTALLED LUMINARIES IN KITCHENS SHALL BE HIGH EFFICACY LUMINARIES AND UP TO 50 PERCENT OF THE TOTAL RATED WATTAGES CAN BE NON HIGH EFFICACY LUMINARIES CONTROLLED WITH SEPARATE SWICH, PER ENERGY CODE SEC. 150(K)
9. PROVIDE 100 SQ. IN. OF MAKE UP AIR AT THE LAUNDRY ROOM. (TO REPLACE AIR BEING EXHAUSTED BY DRYER VENT AND EXHAUST FAN IF APPLICABLE), CMC SEC. 504.3.2.
10. FAMILY ROOMS, DINING ROOM, LIVING ROOMS, PARLORS, LIBRARIES, DENS, BEDROOMS, SUNROOMS, RECREATION ROOMS, CLOSETS, HALLWAYS, OR SIMILAR ROOMS OR AREAS, 15 & 20 AMP OUTLETS SHALL BE ARC FAULT CIRCUIT INTERRUPTED, COMBINATION TYPE AFCI REQUIRED PER CEC ART.210.12(B)
11. ALL EXHAUST FANS MUST BE SPECIFIED AT A NOISE RATING OF A MAXIMUM 1 "SONE" (FOR CONTINUOUS USE CALCULATION) OR 3 "SONE" (FOR INTERMITTENT USE CALCULATION)
12. PROVIDE HUMIDISTAT AT ALL FANS LOCATED IN ALL BATHROOMS WITH A BATHTUB, SHOWER OR TUB/SHOWER COMBINATION.

KPI Inc.
KNITTER PARTNERS INTERNATIONAL, INC.
architecture & planning
1401 DOVE ST. SUITE 240
NEWPORT BEACH, CA 92660
PHONE: (949) 752-1177
FAX: (949) 752-0151
WWW.KNITTER.COM

©KNITTER PARTNERS INTERNATIONAL
ALL RIGHTS RESERVED 2013

THIS DOCUMENT IS THE PROPERTY AND COPYRIGHT OF KNITTER PARTNERS INTERNATIONAL, INC. AND SHALL NOT BE USE ON ANY OTHER WORK, BE REPRODUCED OR DISCLOSED TO OTHERS EXCEPT BY WRITTEN AUTHORIZATION FROM KNITTER PARTNERS INTERNATIONAL, INC.

NO.	DATE	REVISION

IMAGINE DEVELOPMENT L.L.C.

THE COLONY 65
LANCASTER, CALIFORNIA

LICENSED ARCHITECT
MICHAEL J. KNITTER
C10524
REN. 4-30-19
STATE OF CALIFORNIA

PROJECT INFO

PLAN 3

JOB NUMBER **3036**
PROJECT MGR. RC
DRAWN BY RC
PLOT DATE: 3-6-2018

SHEET TITLE

SECOND FLOOR UTILITY PLAN

SHEET NUMBER

3.5

PLOT TIME: 11:08 AM PATH\NAME: G:\O_KPI\2013\13036 COLONY 65 PLANS\PLAN 3\3036 30 PLAN 3.DC5

SECTION D

SCALE: 1/4" = 1'-0"

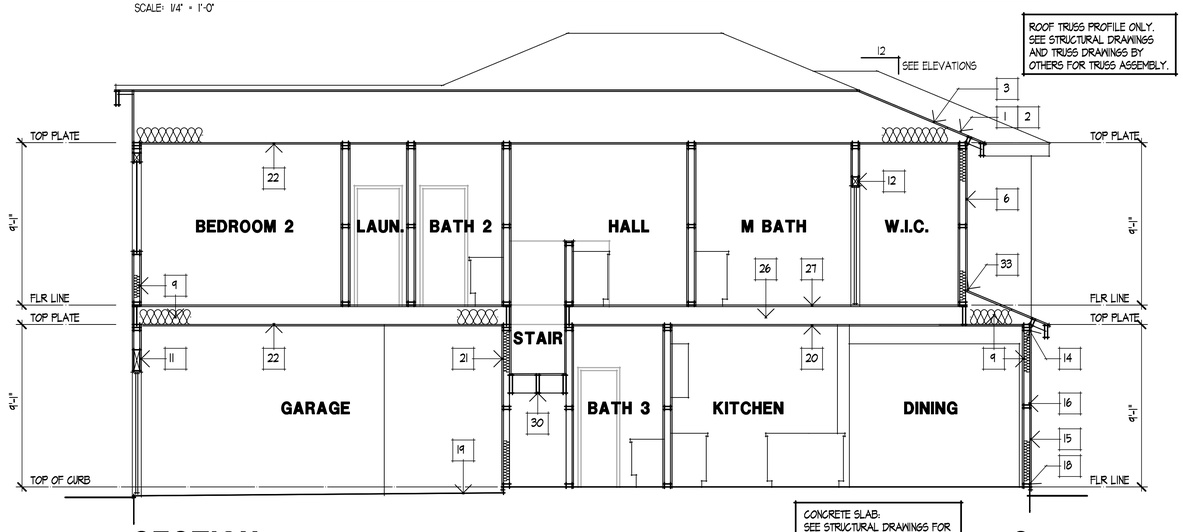

SECTION C

SCALE: 1/4" = 1'-0"

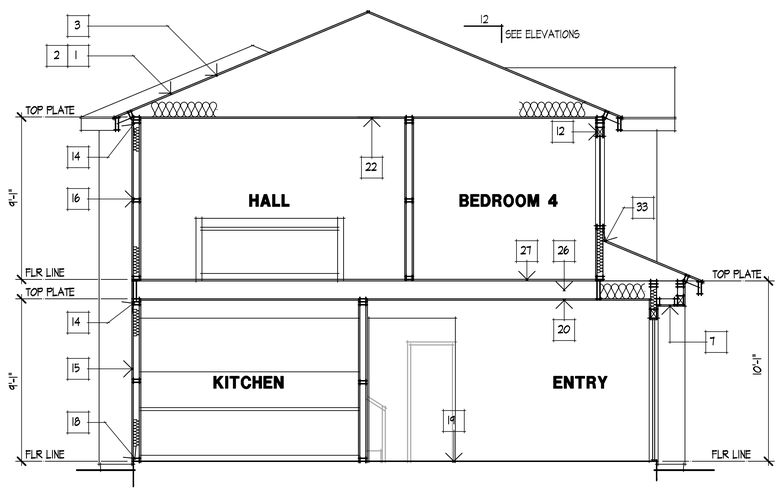

SECTION A

SCALE: 1/4" = 1'-0"

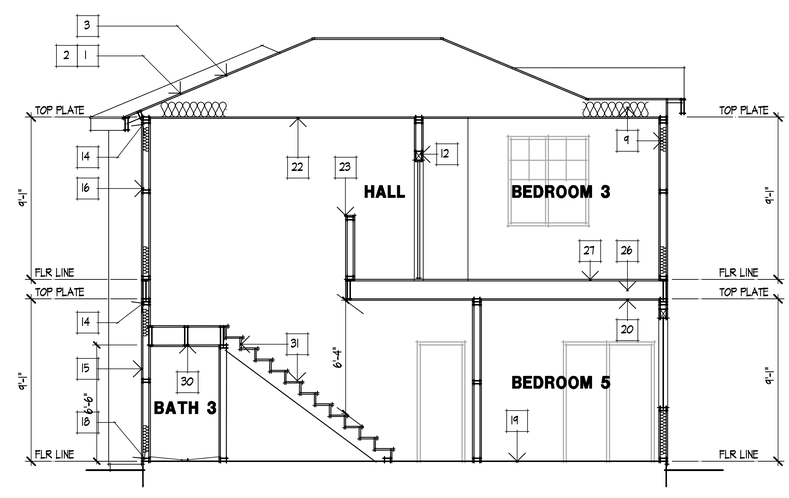

SECTION B

SCALE: 1/4" = 1'-0"

SECTION NOTES

1. ROOF MATERIAL (REFER TO ROOF NOTES)
2. ROOF SHEATHING (REFER TO FRAMING PLAN)
3. DESIGNED WOOD TRUSS PER MANUFACTURER (REFER TO TRUSS PLANS)
4. 2 X ROOF RAFTERS (REFER TO FRAMING PLAN)
5. FALSE 2X FRAMING AT 24" O.C.
6. EXTERIOR FINISH (REFER TO ELEVATION NOTES)
7. EXTERIOR SOFFIT (REFER TO ELEVATION NOTES)
8. 2 X CEILING JOISTS (REFER TO FRAMING PLAN)
9. INSULATION (REFER TO ENERGY COMPLIANCE SHEET)
10. FLUSH BEAM (REFER TO FRAMING PLAN)
11. DROP BEAM (REFER TO FRAMING PLAN)
12. HEADER (REFER TO FRAMING PLAN)
13. 2 X 4 FRAMING
14. CONTINUOUS DOUBLE 2X TOP PLATE
15. 2 X STUDS AT 16" O.C.
16. 2 X BLOCK AT MID-HEIGHT
17. 2 X CRIPPLE STUD AT 16" O.C.
18. 2 X P.T.D.F. SILL PLATE
19. CONCRETE SLAB (REFER TO STRUCTURAL FOUNDATION PLAN)
20. 1/2" GYPSUM BOARD
21. INTERIOR GARAGE FINSIH REFER TO SHEET GN3.
22. 5/8" GYPSUM BOARD AT MEMBERS SPACED GREATER THAN 24" O/C
23. SHELF (REFER TO FLOOR PLAN FOR HEIGHT)
24. SOFFIT (REFER TO FLOOR PLAN FOR HEIGHT)
25. 2 X SOLE PLATE
26. 2 X FLOOR JOISTS (REFER TO FRAMING PLAN)
27. FLOOR SHEATHING (REFER TO FRAMING PLAN)
28. HANDRAIL (REFER TO DETAIL)
29. GUARDRAIL (REFER TO DETAIL)
30. (3) 2 X 12 STAIR STRINGERS
31. 5/8" MIN. PLYWOOD TREAD AND RISERS
32. 2X "NAILED SPACED" DECKING
33. G.I. FLASHING (ROOF TO WALL)
34. RIP 2X DECK JOISTS FOR 1/4" PER FOOT SLOPE
35. ELASTOMERIC DECKING OVER PLYWOOD SUB FLOOR (INSTALLED TO MANUFACTURER'S SPECIFICATIONS)

KPI Inc.

KNITTER PARTNERS INTERNATIONAL, INC.
architecture & planning

1401 DOVE ST. SUITE 240
NEWPORT BEACH, CA 92660
PHONE: (949) 752-1177
FAX: (949) 752-0151
WWW.KNITTER.COM

©KNITTER PARTNERS INTERNATIONAL
ALL RIGHTS RESERVED 2013

THIS DOCUMENT IS THE PROPERTY AND COPYRIGHT OF KNITTER PARTNERS INTERNATIONAL, INC. AND SHALL NOT BE USE ON ANY OTHER WORK, BE REPRODUCED OR DISCLOSED TO OTHERS EXCEPT BY WRITTEN AUTHORIZATION FROM KNITTER PARTNERS INTERNATIONAL, INC.

NO.	DATE	REVISION
△		
△		
△		
△		
△		

IMAGINE DEVELOPMENT L.L.C.

THE COLONY 65
LANCASTER, CALIFORNIA

LICENSED ARCHITECT
MICHAEL J. KNITTER
C10524
REN. 4-30-19
STATE OF CALIFORNIA

PROJECT INFO

PLAN 3

JOB NUMBER **3036**
PROJECT MGR. RC
DRAWN BY XXX
PLOT DATE: 3-6-2018

SHEET TITLE

SECTIONS A, B, C & D

SHEET NUMBER

3.6

PLOT TIME: 9:25 AM PATH\NAME: G:\0_KPI\2013\13036 COLONY 65 PLANS\PLAN 3\3036 32 SECTION 3.DC5

INTERIOR NOTES

1. DOUBLE SINK WITH GARBAGE DISPOSAL
2. BUILT-IN DISHWASHER WITH AIR GAP
3. DROP-IN COOK-TOP WITH EXHAUST HOOD AND MICROWAVE ABOVE AND SLIDE-IN CONVENTIONAL OVEN BELOW (VENT TO OUTSIDE AIR, VERIFY DIMENSIONS WITH MANUFACTURER'S SPEC.'S) (MAINTAIN 30" CLEAR ABOVE RANGE OR COOKTOP TO UNPROTECTED NONCOMBUSTIBLES OR 24" CLEAR TO METAL VENTILATING HOOD.
4. PROVIDE 34" REFRIGERATOR SPACE AND PLUMBING RECESSED IN WALL FOR ICE MAKERS
5. 30" WIDE COMBINATION MICROWAVE ABOVE CONVENTIONAL OVEN (VERIFY DIMENSIONS WITH MANUFACTURER SPEC.'S)
6. PANTRY WITH ADJUSTABLE SHELVES
7. BUILT-IN TRASH COMPACTOR
8. SHOWER CURTAIN ROD
9. 32" X 60" TUB WITH SHOWER
10. 42" X 60" OVAL TUB
11. MIRROR
12. RECESSED MEDICINE CABINET
13. TEMPERED SHOWER ENCLOSURE
14. WASHER SPACE
15. DRYER SPACE
16. 4" TOESPACE
17. 8" TOESPACE
18. CUTTING BOARD
19. SYNTHETIC COUNTERTOP AND SPLASH
20. CERAMIC TILE COUNTERTOP AND SPLASH
21. PEDESTAL SINK
22. WAINSCOT TO 72"
23. STAIN GRADE FINISH
24. PAINT GRADE FINISH
25. LAUNDRY SINK
26. DRYWALL SHELF
27. DRYWALL SOFFIT
28. VEGETABLE SINK
29. WOOD TOP

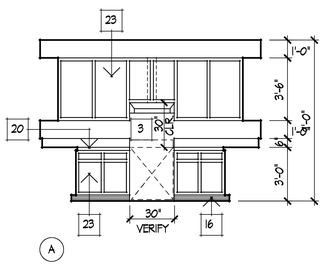

KITCHEN

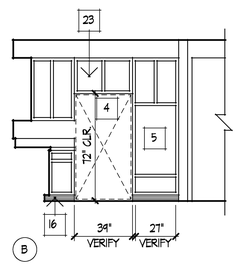

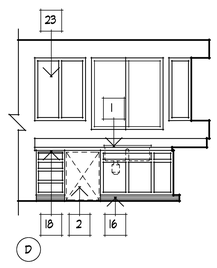

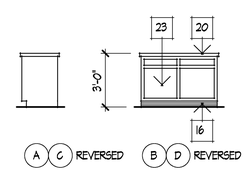

ISLAND

SCALE: 1/4"= 1'-0"

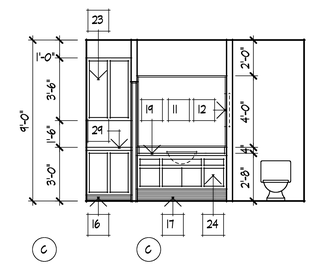

LINEN BATH 3

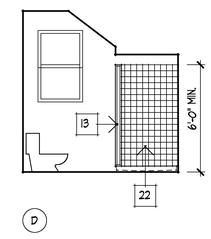

SCALE: 1/4"= 1'-0"

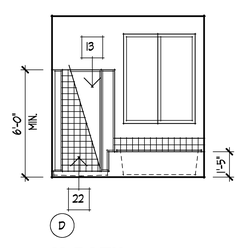

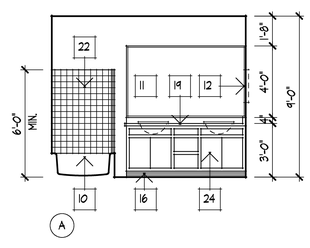

M BATH

SCALE: 1/4"= 1'-0"

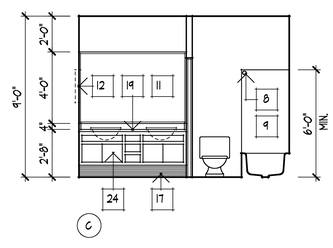

BATH 2

SCALE: 1/4"= 1'-0"

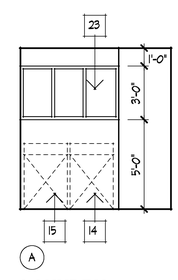

LAUNDRY

SCALE: 1/4"= 1'-0"

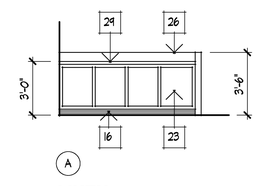

LINEN

SCALE: 1/4"= 1'-0"

KPI Inc.

KNITTER PARTNERS INTERNATIONAL, INC.
architecture & planning

1401 DOVE ST. SUITE 240
NEWPORT BEACH, CA 92660
PHONE: (949) 752-1177
FAX: (949) 752-0151
WWW.KNITTER.COM

©KNITTER PARTNERS INTERNATIONAL
ALL RIGHTS RESERVED 2013

THIS DOCUMENT IS THE PROPERTY AND COPYRIGHT OF KNITTER PARTNERS INTERNATIONAL, INC. AND SHALL NOT BE USE ON ANY OTHER WORK, BE REPRODUCED OR DISCLOSED TO OTHERS EXCEPT BY WRITTEN AUTHORIZATION FROM KNITTER PARTNERS INTERNATIONAL, INC.

NO.	DATE	REVISION
△		
△		
△		
△		
△		

IMAGINE DEVELOPMENT L.L.C.

THE COLONY 65
LANCASTER, CALIFORNIA

LICENSED ARCHITECT
MICHAEL J. KNITTER
C10524
REN. 4-30-19
STATE OF CALIFORNIA

PROJECT INFO

PLAN 3

JOB NUMBER **3036**
PROJECT MGR. RC
DRAWN BY XXX
PLOT DATE: 3-6-2018

SHEET TITLE

INTERIOR ELEVATIONS

SHEET NUMBER

3.7

PLOT TIME: 9:25 AM PATH\NAME: G:\O_KPI\2013\3036 COLONY 65 PLANS\PLAN 3\3036 32 SECTION 3.DC5

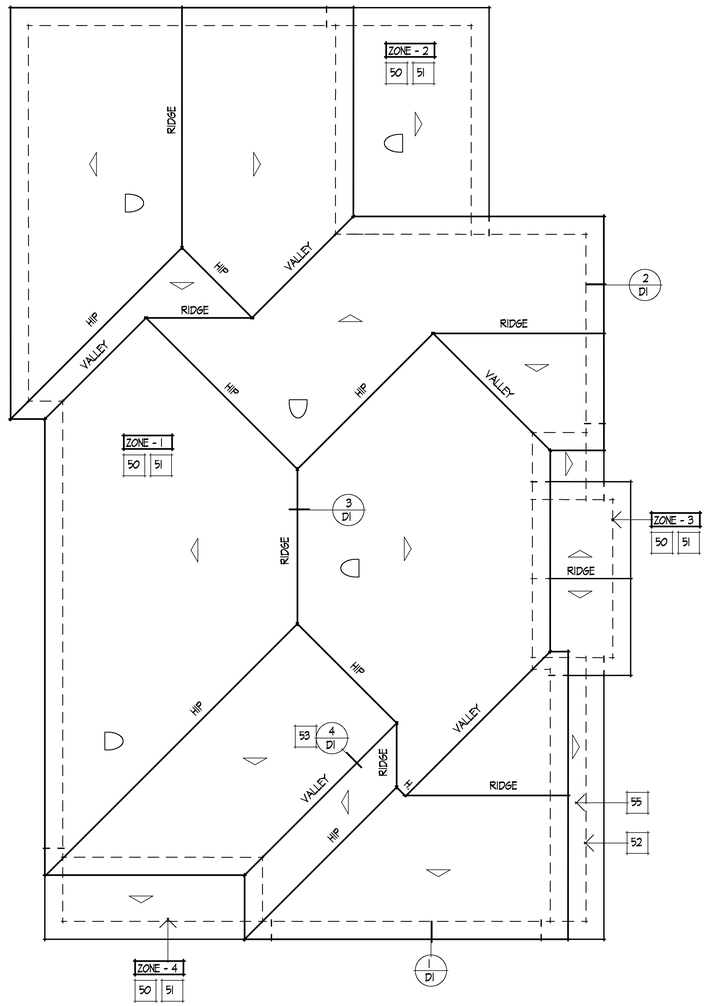

ROOF PLAN - A

SCALE: 1/4" = 1'-0"

ROOF NOTES

50. ROOF SLOPES: 5 : 12
51. ROOF MATERIAL: CONC. 'S' TILE
    ROOF COVERING: MFR. MONIER "LIFETILE" ICBO #2656 OR APPROVED EQUAL. ROOF MATERIAL SHALL BE CLASS 'A' FIRE RETARDENT.
52. ALL EAVES AND RAKES SHALL BE 12" O.H., U.N.O.
53. PROVIDE G.I. VALLEY FLASHING AT ALL ROOF VALLEYS
54. PROVIDE SADDLE AND FLASHING AT CHIMNEY CHASE, TYPICAL
55. LINE OF STRUCTURE

ATTIC VENT CALCULATIONS

THE ATTIC VENTILATION CALCULATIONS PER CRC SECTION R806.2 AS FOLLOWS:

(A) ATTIC AREA (SQUARE FEET).

(B) DIVIDE (A) BY 150 *(300 IF VAPOR RETARDER IS PROVIDED AT WARM SIDE PER. CRC. SEC. R806.2) AND MULTIPLY BY 144 TO CALCULATE THE TOTAL REQUIRED NET FREE VENTING AREA IN SQUARE INCHES.
SEE GENERAL NOTE DIVISION 6, SECTION A.

(C) TOTAL SQUARE INCHES OF NET FREE VENTILATING AREA PROVIDED BY GABLE END VENTS.

(D) TOTAL SQUARE INCHES OF NET FREE VENTILATING AREA PROVIDED BY ROOF VENTILATORS.

(E) TOTAL SQUARE INCHES OF NET FREE VENTILATING AREA PROVIDED BY UNDER EAVE VENTS BLOCKING.

PLAN "3A"	A ATTIC AREA	B REQUIRED VENTING	C GABLE END VENTS	D ROOF VENTS	E EAVE VENTS
ZONE-1	1234 FT.²	592 IN.²	0 IN.²	240 HIGH 240 LOW IN.²	120 IN.²
ZONE-2 *	88 FT.²	85 IN.²	0 IN.²	120 HIGH LOW IN.²	0 IN.²
ZONE-3 *	81 FT.²	78 IN.²	0 IN.²	0 HIGH LOW IN.²	80 IN.²
ZONE-4 *	40 FT.²	42 IN.²	0 IN.²	0 HIGH LOW IN.²	50 IN.²

NOTES:
ALL VENT OPENINGS SHALL BE COVERED W/ 1/4" CORROSIVE RESISTANT METAL MESH.

FRAMER SHALL BE RESPONSIBLE FOR COORDINATING W/ TRUSS MFR TO ACCOMMODATE ALL ATTIC VENTS

ALL VENTS SHALL BE INSTALLED SO AS TO MAKE THEM WATER-PROOF AND WALL MOUNTED LOUVERS SHALL BE SEALED AND FLASHED WITH "MOISTOP" IN THE SAME MANNER PRESCRIBED FOR WINDOW INSTALLATION.

PROVIDE APPROVED INSULATION DAMS (BAFFLES) WHERE VENT BLOCKS ARE USED BETWEEN ROOF FRAMING MEMBERS TO PREVENT VENT HOLES BEING BLOCKED BY INSULATION.

ATTIC VENTS

(1) DV24A DORMER VENT PROVIDES 120 SQ. IN. OF FREE FLOW AIR MOVEMENT

(1) L 1424 14" X 24" ATTIC VENT PROVIDES 168 SQ. IN. OF FREE FLOW AIR MOVEMENT

(1) L 1418 14" X 18" ATTIC VENT PROVIDES 126 SQ. IN. OF FREE FLOW AIR MOVEMENT

(1) L 1412 14" X 12" ATTIC VENT PROVIDES 84 SQ. IN. OF FREE FLOW AIR MOVEMENT

(1) L 149 14" X 9" ATTIC VENT PROVIDES 63 SQ. IN. OF FREE FLOW AIR MOVEMENT

(1) O'HAGIN CLOAKED VENT TILE PROVIDES 95 SQ. IN. OF FREE FLOW AIR MOVEMENT

(1) VENT BLOCK PROVIDES 10 SQ. IN. OF FREE FLOW AIR MOVEMENT
(1) VENT BLOCK EVERY THIRD BAY

KPI Inc.
KNITTER PARTNERS INTERNATIONAL, INC.
architecture & planning
1401 DOVE ST. SUITE 240
NEWPORT BEACH, CA 92660
PHONE: (949) 752-1177
FAX: (949) 752-0151
WWW.KNITTER.COM
©KNITTER PARTNERS INTERNATIONAL
ALL RIGHTS RESERVED 2013

THIS DOCUMENT IS THE PROPERTY AND COPYRIGHT OF KNITTER PARTNERS INTERNATIONAL, INC. AND SHALL NOT BE USE ON ANY OTHER WORK, BE REPRODUCED OR DISCLOSED TO OTHERS EXCEPT BY WRITTEN AUTHORIZATION FROM KNITTER PARTNERS INTERNATIONAL, INC.

NO.	DATE	REVISION
△		
△		
△		
△		
△		

IMAGINE DEVELOPMENT L.L.C.

THE COLONY 65
LANCASTER, CALIFORNIA

LICENSED ARCHITECT
MICHAEL J. KNITTER
C10524
REN. 4-30-19
STATE OF CALIFORNIA

PROJECT INFO
PLAN 3
JOB NUMBER **3036**
PROJECT MGR. RC
DRAWN BY RC
PLOT DATE: 3-6-2018

SHEET TITLE
ROOF PLAN A

SHEET NUMBER
3.8

PLOT TIME: 11:08 AM PATH\NAME: G:\O_KPI\2013\13036 COLONY 65 PLANS\PLAN 3\13036 3D PLAN 3.DC5

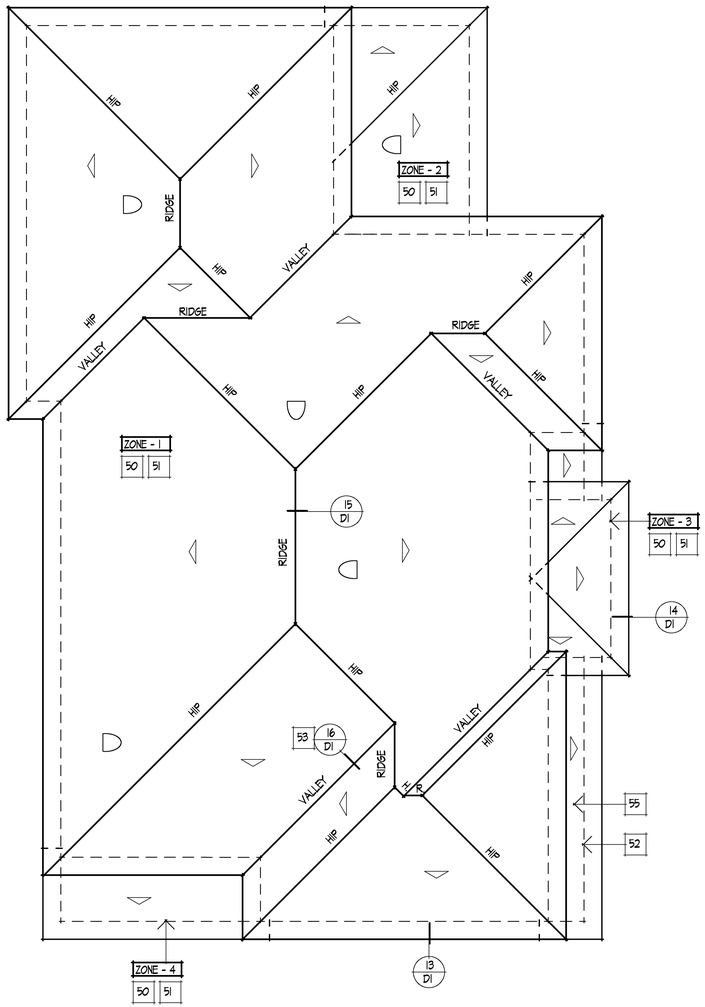

ROOF PLAN - B

SCALE: 1/4" = 1'-0"

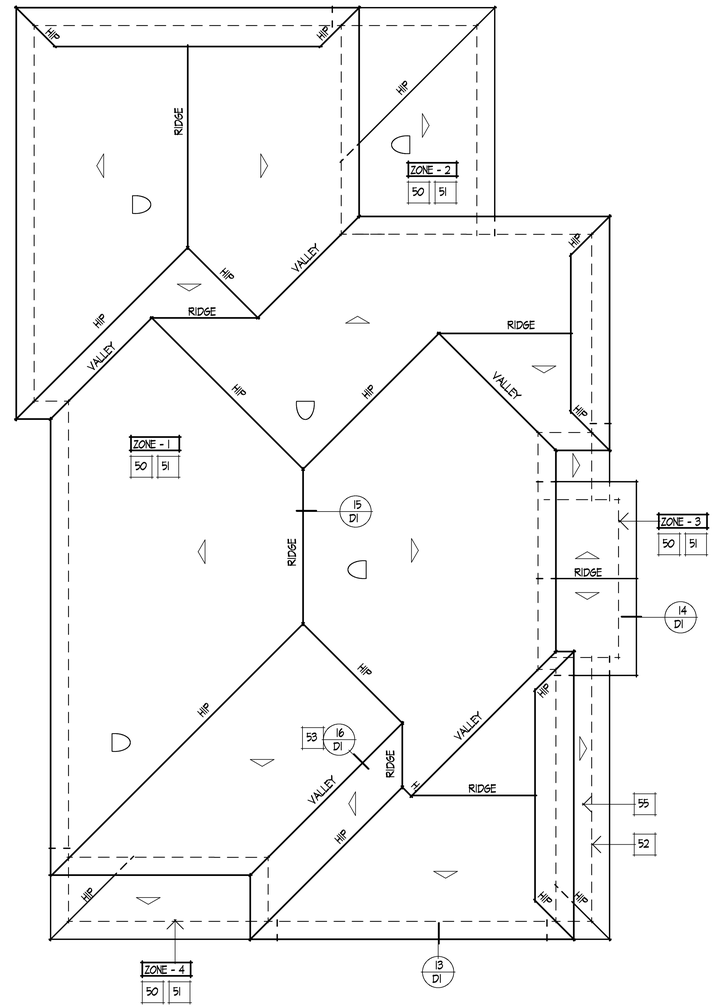

ROOF PLAN - C

SCALE: 1/4" = 1'-0"

ROOF NOTES

50. ROOF SLOPES: 3 : 12
51. ROOF MATERIAL: CONC. S' TILE
    ROOF COVERING: MFR: MONIER "LIFETILE" ICBO #2656 OR APPROVED EQUAL. ROOF MATERIAL SHALL BE CLASS 'A' FIRE RETARDENT.
52. ALL EAVES AND RAKES SHALL BE 12" O.H., U.N.O.
53. PROVIDE G.I. VALLEY FLASHING AT ALL ROOF VALLEYS
54. PROVIDE SADDLE AND FLASHING AT CHIMNEY CHASE, TYPICAL
55. LINE OF STRUCTURE

ATTIC VENT CALCULATIONS

THE ATTIC VENTILATION CALCULATIONS PER CRC SECTION R806.2 AS FOLLOWS:

(A) ATTIC AREA (SQUARE FEET).

(B) DIVIDE (A) BY 150 *(300 IF VAPOR RETARDER IS PROVIDED AT WARM SIDE PER. CRC. SEC. R806.2) AND MULTIPLY BY 144 TO CALCULATE THE TOTAL REQUIRED NET FREE VENTING AREA IN SQUARE INCHES.
SEE GENERAL NOTE DIVISION 6, SECTION A.

(C) TOTAL SQUARE INCHES OF NET FREE VENTILATING AREA PROVIDED BY GABLE END VENTS.

(D) TOTAL SQUARE INCHES OF NET FREE VENTILATING AREA PROVIDED BY ROOF VENTILATORS.

(E) TOTAL SQUARE INCHES OF NET FREE VENTILATING AREA PROVIDED BY UNDER EAVE VENTS BLOCKING.

PLAN "3B" & "3C"	A ATTIC AREA	B REQUIRED VENTING	C GABLE END VENTS	D ROOF VENTS	E EAVE VENTS
ZONE-1	1234 FT.²	592 IN.²	0 IN.²	240 HIGH 240 LOW IN.²	120 IN.²
ZONE-2 *	88 FT.²	85 IN.²	0 IN.²	120 HIGH LOW IN.²	0 IN.²
ZONE-3 *	81 FT.²	78 IN.²	0 IN.²	0 HIGH LOW IN.²	80 IN.²
ZONE-4 *	40 FT.²	42 IN.²	0 IN.²	0 HIGH LOW IN.²	50 IN.²

NOTES:

ALL VENT OPENINGS SHALL BE COVERED W/ 1/4" CORROSIVE RESISTANT METAL MESH.

FRAMER SHALL BE RESPONSIBLE FOR COORDINATING W/ TRUSS MFR TO ACCOMMODATE ALL ATTIC VENTS

ALL VENTS SHALL BE INSTALLED SO AS TO MAKE THEM WATER-PROOF AND WALL MOUNTED LOUVERS SHALL BE SEALED AND FLASHED WITH "MOISTOP" IN THE SAME MANNER PRESCRIBED FOR WINDOW INSTALLATION.

PROVIDE APPROVED INSULATION DAMS (BAFFLES) WHERE VENT BLOCKS ARE USED BETWEEN ROOF FRAMING MEMBERS TO PREVENT VENT HOLES BEING BLOCKED BY INSULATION.

ATTIC VENTS

(1) DV24A DORMER VENT PROVIDES 120 SQ. IN. OF FREE FLOW AIR MOVEMENT

(1) L 1424 14" X 24" ATTIC VENT PROVIDES 168 SQ. IN. OF FREE FLOW AIR MOVEMENT

(1) L 1418 14" X 18" ATTIC VENT PROVIDES 126 SQ. IN. OF FREE FLOW AIR MOVEMENT

(1) L 1412 14" X 12" ATTIC VENT PROVIDES 84 SQ. IN. OF FREE FLOW AIR MOVEMENT

(1) L 149 14" X 9" ATTIC VENT PROVIDES 63 SQ. IN. OF FREE FLOW AIR MOVEMENT

(1) O'HAGIN CLOAKED VENT TILE PROVIDES 95 SQ. IN. OF FREE FLOW AIR MOVEMENT

(1) VENT BLOCK PROVIDES 10 SQ. IN. OF FREE FLOW AIR MOVEMENT
(1) VENT BLOCK EVERY THIRD BAY

KPI Inc.
KNITTER PARTNERS INTERNATIONAL, INC.
architecture & planning
1401 DOVE ST. SUITE 240
NEWPORT BEACH, CA 92660
PHONE: (949) 752-1177
FAX: (949) 752-0151
WWW.KNITTER.COM

©KNITTER PARTNERS INTERNATIONAL
ALL RIGHTS RESERVED 2013

THIS DOCUMENT IS THE PROPERTY AND COPYRIGHT OF KNITTER PARTNERS INTERNATIONAL, INC. AND SHALL NOT BE USE ON ANY OTHER WORK, BE REPRODUCED OR DISCLOSED TO OTHERS EXCEPT BY WRITTEN AUTHORIZATION FROM KNITTER PARTNERS INTERNATIONAL, INC.

NO.	DATE	REVISION
△		
△		
△		
△		
△		

IMAGINE DEVELOPMENT L.L.C.

THE COLONY 65
LANCASTER, CALIFORNIA

LICENSED ARCHITECT
MICHAEL J. KNITTER
C10524
REN. 4-30-19
STATE OF CALIFORNIA

PROJECT INFO

PLAN 3

JOB NUMBER **3036**
PROJECT MGR. RC
DRAWN BY AD
PLOT DATE: 3-6-2018

SHEET TITLE

ROOF PLAN B & C

SHEET NUMBER

3.8.1

PLOT TIME: 9:23 AM PATH\NAME: G:\O_KPI\2013\13036 COLONY 65 PLANS\PLAN 3\3036 31 PLAN 3 ADDENDA.DC5

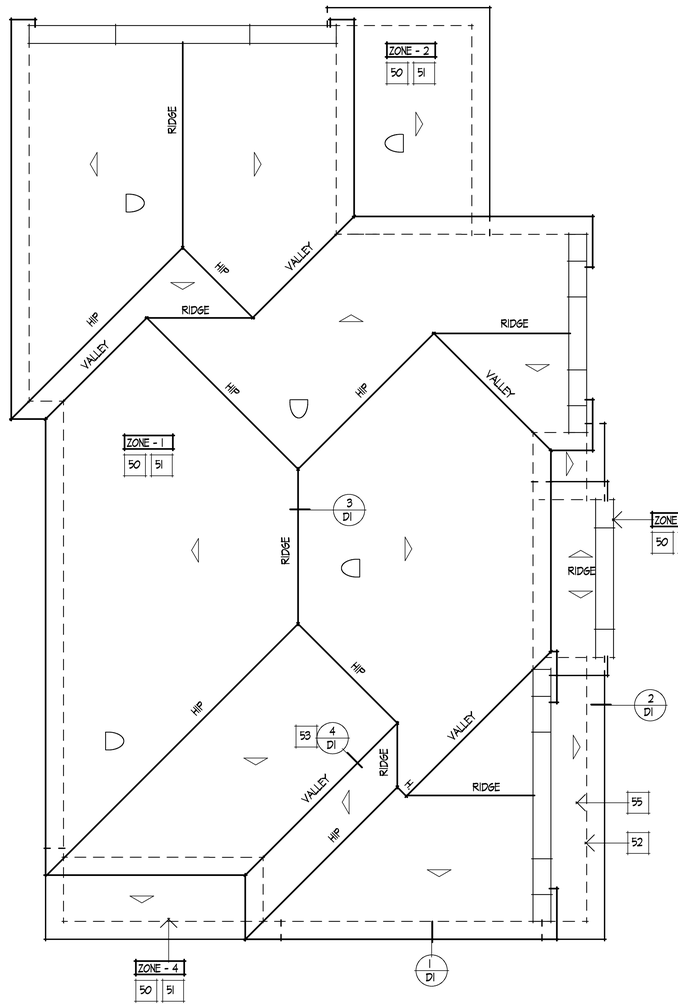

ROOF PLAN - D

SCALE: 1/4" = 1'-0"

ROOF NOTES

50. ROOF SLOPES: ___3 : 12_____
51. ROOF MATERIAL: ___CONC. S' TILE___
    ROOF COVERING: MFR: MONIER "LIFETILE" ICBO #2656 OR APPROVED EQUAL. ROOF MATERIAL SHALL BE CLASS 'A' FIRE RETARDENT.
52. ALL EAVES AND RAKES SHALL BE 12" O.H., U.N.O.
53. PROVIDE G.I. VALLEY FLASHING AT ALL ROOF VALLEYS
54. PROVIDE SADDLE AND FLASHING AT CHIMNEY CHASE, TYPICAL
55. LINE OF STRUCTURE

ATTIC VENT CALCULATIONS

THE ATTIC VENTILATION CALCULATIONS PER CRC SECTION R806.2 AS FOLLOWS:

(A) ATTIC AREA (SQUARE FEET).

(B) DIVIDE (A) BY 150 *(300 IF VAPOR RETARDER IS PROVIDED AT WARM SIDE PER. CRC. SEC. R806.2) AND MULTIPLY BY 144 TO CALCULATE THE TOTAL REQUIRED NET FREE VENTING AREA IN SQUARE INCHES.
SEE GENERAL NOTE DIVISION 6, SECTION A.

(C) TOTAL SQUARE INCHES OF NET FREE VENTILATING AREA PROVIDED BY GABLE END VENTS.

(D) TOTAL SQUARE INCHES OF NET FREE VENTILATING AREA PROVIDED BY ROOF VENTILATORS.

(E) TOTAL SQUARE INCHES OF NET FREE VENTILATING AREA PROVIDED BY UNDER EAVE VENTS BLOCKING.

PLAN "3D"	A ATTIC AREA	B REQUIRED VENTING	C GABLE END VENTS	D ROOF VENTS	E EAVE VENTS
ZONE-1	1234 FT.²	592 IN.²	0 IN.²	240 HIGH 240 LOW IN.²	120 IN.²
ZONE-2 *	88 FT.²	85 IN.²	0 IN.²	120 HIGH LOW IN.²	0 IN.²
ZONE-3 *	81 FT.²	78 IN.²	0 IN.²	0 HIGH LOW IN.²	80 IN.²
ZONE-4 *	40 FT.²	42 IN.²	0 IN.²	0 HIGH LOW IN.²	50 IN.²

NOTES:
ALL VENT OPENINGS SHALL BE COVERED W/ 1/4" CORROSIVE RESISTANT METAL MESH.

FRAMER SHALL BE RESPONSIBLE FOR COORDINATING W/ TRUSS MFR TO ACCOMMODATE ALL ATTIC VENTS

ALL VENTS SHALL BE INSTALLED SO AS TO MAKE THEM WATER-PROOF AND WALL MOUNTED LOUVERS SHALL BE SEALED AND FLASHED WITH "MOISTOP" IN THE SAME MANNER PRESCRIBED FOR WINDOW INSTALLATION.

PROVIDE APPROVED INSULATION DAMS (BAFFLES) WHERE VENT BLOCKS ARE USED BETWEEN ROOF FRAMING MEMBERS TO PREVENT VENT HOLES BEING BLOCKED BY INSULATION.

ATTIC VENTS

(1) DV24A DORMER VENT PROVIDES 120 SQ. IN. OF FREE FLOW AIR MOVEMENT

(1) L 1424 14" X 24" ATTIC VENT PROVIDES 168 SQ. IN. OF FREE FLOW AIR MOVEMENT

(1) L 1418 14" X 18" ATTIC VENT PROVIDES 126 SQ. IN. OF FREE FLOW AIR MOVEMENT

(1) L 1412 14" X 12" ATTIC VENT PROVIDES 84 SQ. IN. OF FREE FLOW AIR MOVEMENT

(1) L 149 14" X 9" ATTIC VENT PROVIDES 63 SQ. IN. OF FREE FLOW AIR MOVEMENT

(1) O'HAGIN CLOAKED VENT TILE PROVIDES 95 SQ. IN. OF FREE FLOW AIR MOVEMENT

(1) VENT BLOCK PROVIDES 10 SQ. IN. OF FREE FLOW AIR MOVEMENT
(1) VENT BLOCK EVERY THIRD BAY

KPI Inc.
KNITTER PARTNERS INTERNATIONAL, INC.
architecture & planning
1401 DOVE ST. SUITE 240
NEWPORT BEACH, CA 92660
PHONE: (949) 752-1177
FAX: (949) 752-0151
WWW.KNITTER.COM
©KNITTER PARTNERS INTERNATIONAL
ALL RIGHTS RESERVED 2013

THIS DOCUMENT IS THE PROPERTY AND COPYRIGHT OF KNITTER PARTNERS INTERNATIONAL, INC. AND SHALL NOT BE USE ON ANY OTHER WORK, BE REPRODUCED OR DISCLOSED TO OTHERS EXCEPT BY WRITTEN AUTHORIZATION FROM KNITTER PARTNERS INTERNATIONAL, INC.

NO.	DATE	REVISION
△		
△		
△		
△		
△		

IMAGINE DEVELOPMENT L.L.C.

THE COLONY 65
LANCASTER, CALIFORNIA

LICENSED ARCHITECT
MICHAEL J. KNITTER
C10524
REN. 4-30-19
STATE OF CALIFORNIA

PROJECT INFO
PLAN 3
JOB NUMBER **3036**
PROJECT MGR. RC
DRAWN BY AD
PLOT DATE: 3-6-2018

SHEET TITLE
ROOF PLAN D

SHEET NUMBER
3.8.2

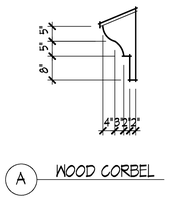

FRONT A

SCALE: 1/4" = 1'-0"

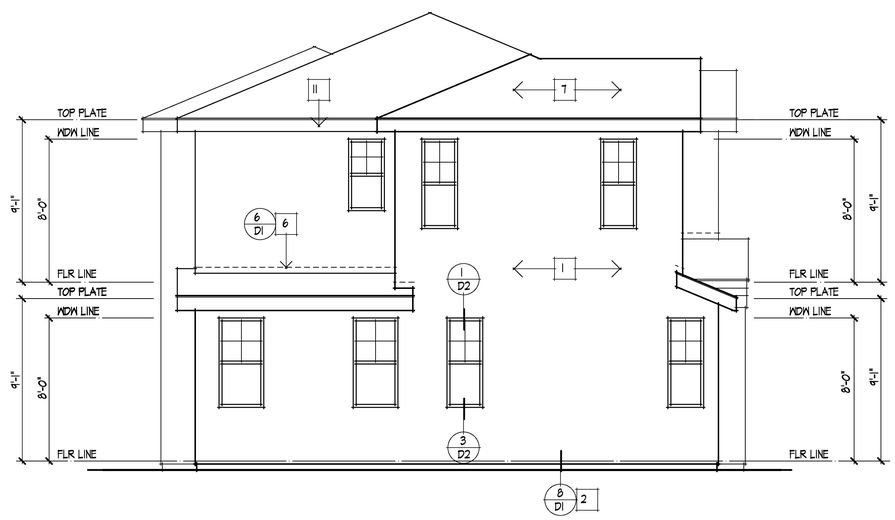

LEFT A

SCALE: 1/4" = 1'-0"

ELEVATION NOTES

1. 7/8" STUCCO (REFER TO GENERAL NOTES)
2. CONTINUOUS G.I. STUCCO SCREED (REFER TO DETAIL)
3. APPROVED SPARK ARRESTER BY FIREPLACE MFR.
4. G.I. SADDLE AND FLASHING
5. G.I. CHIMNEY CAP BY FIREPLACE MFR.
6. G.I. FLASHING
7. ROOF MATERIAL (REFER TO ROOF NOTES)
8. STUCCO SOFFIT O/ METAL LATH O/ BUILDING PAPER
9. ATTIC VENT (REFER TO ATTIC VENT CALCS)
10. 3X6 RAFTER TAILS
11. RE/S FASCIA OR BARGE BOARD. SEE ELEVATIONS FOR SIZE.
12. RE/S TRIM. SEE ELEVATIONS FOR SIZE.
13. STUCCO OVER 2X TRIM
14. POT SHELF (REFER TO DETAIL)
15. LINE OF CEILING
16. LINE OF SHELF
17. LINE OF ROOF ABOVE
18. DECORATIVE FOAM PIPE
19. TYPICAL EXTERIOR SIDING
20. DECORATIVE TILE
21. WOOD SHUTTERS (NON ACTIVE)
22. WOOD CORBEL
23. STUCCO RECESS
24. FINISH COAT OVER FOAM TRIM. (REFER TO DETAIL)
25. ELDORADO STONE (ER-602) OR APPROVED EQUAL
26. WOOD OUTLOOKER
27. SECTIONAL GARAGE DOOR
28. WOOD RAIL OR W.I. RAIL (REFER TO DETAIL)
29. EXTERIOR GRADE PLYWOOD SOFFIT
30. 14" X 18" G.I. SCREENED AND LOUVERED COMBUSTION AIR VENT

KPI INC.
KNITTER PARTNERS INTERNATIONAL, INC.
architecture & planning
1401 DOVE ST. SUITE 240
NEWPORT BEACH, CA 92660
PHONE: (949) 752-1177
FAX: (949) 752-0151
WWW.KNITTER.COM

©KNITTER PARTNERS INTERNATIONAL
ALL RIGHTS RESERVED 2013

THIS DOCUMENT IS THE PROPERTY AND COPYRIGHT OF KNITTER PARTNERS INTERNATIONAL, INC. AND SHALL NOT BE USE ON ANY OTHER WORK, BE REPRODUCED OR DISCLOSED TO OTHERS EXCEPT BY WRITTEN AUTHORIZATION FROM KNITTER PARTNERS INTERNATIONAL, INC.

NO.	DATE	REVISION
△		
△		
△		
△		
△		

IMAGINE DEVELOPMENT L.L.C.

THE COLONY 65
LANCASTER, CALIFORNIA

LICENSED ARCHITECT
MICHAEL J. KNITTER
C10524
REN. 4-30-19
STATE OF CALIFORNIA

PROJECT INFO
PLAN 3

JOB NUMBER **3036**
PROJECT MGR. RC
DRAWN BY AD
PLOT DATE: 3-6-2018

SHEET TITLE
ELEVATION 'A' FRONT & LEFT ELEVATION

SHEET NUMBER
3.9

PLOT TIME: 11:08 AM PATH\NAME: G:\0_KPI\2013\3036 COLONY 65 PLANS\PLAN 3\3036 33 ELEVATION 3.DC5

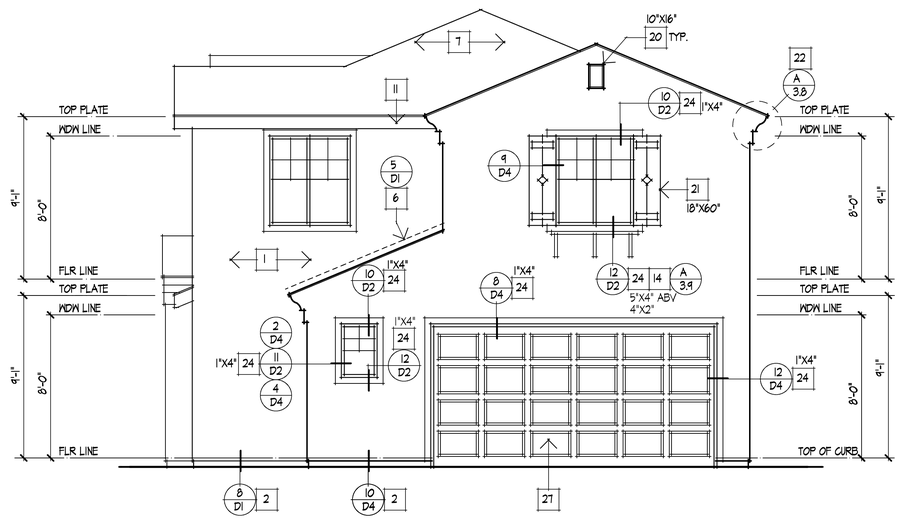

RIGHT A

SCALE: 1/4" = 1'-0"

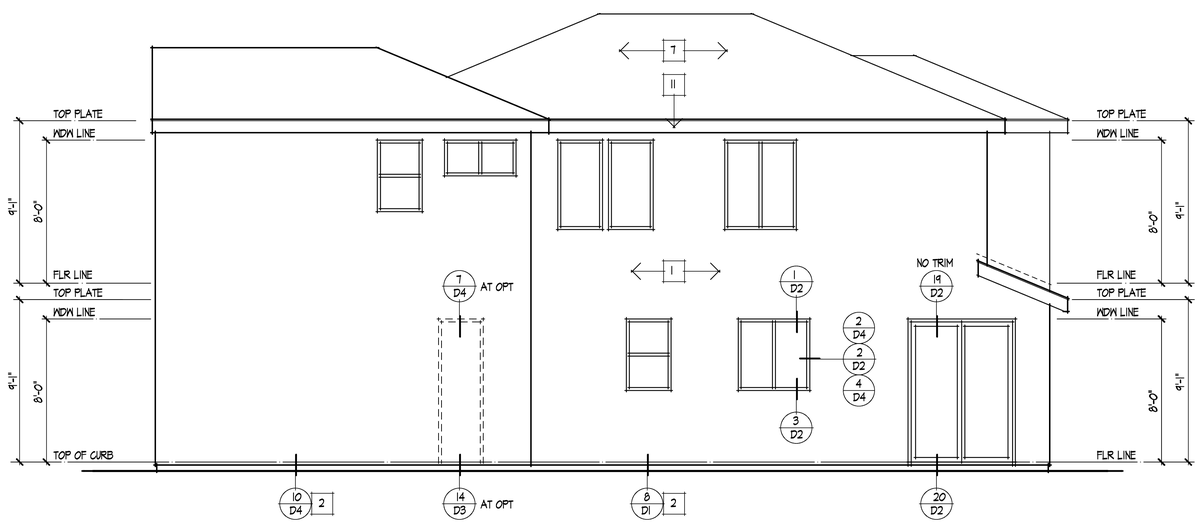

REAR A

SCALE: 1/4" = 1'-0"

ELEVATION NOTES

1. 7/8" STUCCO (REFER TO GENERAL NOTES)
2. CONTINUOUS G.I. STUCCO SCREED (REFER TO DETAIL)
3. APPROVED SPARK ARRESTER BY FIREPLACE MFR.
4. G.I. SADDLE AND FLASHING
5. G.I. CHIMNEY CAP BY FIREPLACE MFR.
6. G.I. FLASHING
7. ROOF MATERIAL (REFER TO ROOF NOTES)
8. STUCCO SOFFIT O/ METAL LATH O/ BUILDING PAPER
9. ATTIC VENT (REFER TO ATTIC VENT CALCS)
10. 3X6 RAFTER TAILS
11. RE/S FASCIA OR BARGE BOARD. SEE ELEVATIONS FOR SIZE.
12. RE/S TRIM. SEE ELEVATIONS FOR SIZE.
13. STUCCO OVER 2X TRIM
14. POT SHELF (REFER TO DETAIL)
15. LINE OF CEILING
16. LINE OF SHELF
17. LINE OF ROOF ABOVE
18. DECORATIVE FOAM PIPE
19. TYPICAL EXTERIOR SIDING
20. DECORATIVE TILE
21. WOOD SHUTTERS (NON ACTIVE)
22. WOOD CORBEL
23. STUCCO RECESS
24. FINISH COAT OVER FOAM TRIM. (REFER TO DETAIL)
25. ELDORADO STONE (ER-602) OR APPROVED EQUAL
26. WOOD OUTLOOKER
27. SECTIONAL GARAGE DOOR
28. WOOD RAIL OR W.I. RAIL (REFER TO DETAIL)
29. EXTERIOR GRADE PLYWOOD SOFFIT
30. 14" X 18" G.I. SCREENED AND LOUVERED COMBUSTION AIR VENT

KPI INC.
KNITTER PARTNERS INTERNATIONAL, INC.
architecture & planning
1401 DOVE ST. SUITE 240
NEWPORT BEACH, CA 92660
PHONE: (949) 752-1177
FAX: (949) 752-0151
WWW.KNITTER.COM
©KNITTER PARTNERS INTERNATIONAL
ALL RIGHTS RESERVED 2013

THIS DOCUMENT IS THE PROPERTY AND COPYRIGHT OF KNITTER PARTNERS INTERNATIONAL, INC. AND SHALL NOT BE USE ON ANY OTHER WORK, BE REPRODUCED OR DISCLOSED TO OTHERS EXCEPT BY WRITTEN AUTHORIZATION FROM KNITTER PARTNERS INTERNATIONAL, INC.

NO.	DATE	REVISION
△		
△		
△		
△		
△		

IMAGINE DEVELOPMENT L.L.C.

THE COLONY 65
LANCASTER, CALIFORNIA

LICENSED ARCHITECT
MICHAEL J. KNITTER
C10524
REN. 4-30-19
STATE OF CALIFORNIA

PROJECT INFO
PLAN 3

JOB NUMBER **3036**
PROJECT MGR. RC
DRAWN BY AD
PLOT DATE: 3-6-2018

SHEET TITLE
ELEVATION 'A' RIGHT & REAR ELEVATIONS

SHEET NUMBER
3.10

PLOT TIME: 11:08 AM PATH\NAME: G:\0_KPI\2013\3036 COLONY 65 PLANS\PLAN 3\3036 33 ELEVATION 3.DC5

FRONT

SCALE: 1/4" = 1'-0"

B

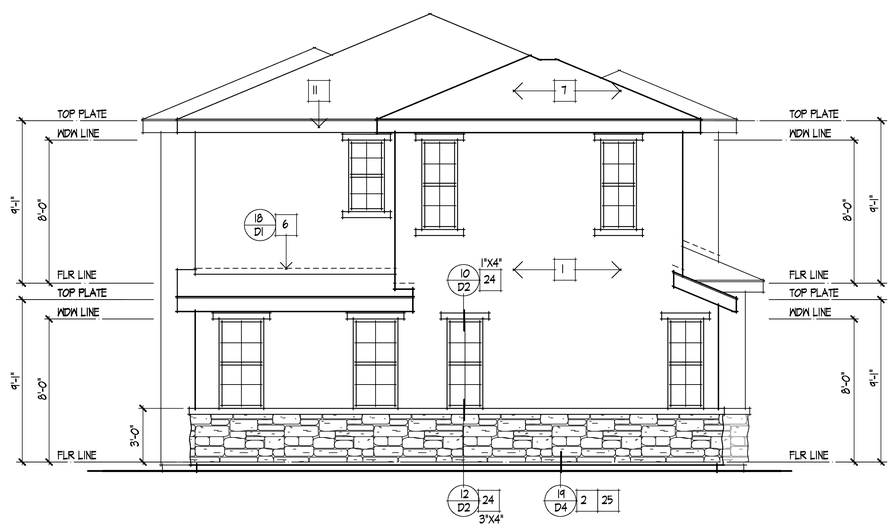

LEFT

SCALE: 1/4" = 1'-0"

B

SEE SHEET 3.2.1 & 3.3.1 FOR ADDENDA INFORMATION PER ELEVATION.

ELEVATION NOTES

1. 7/8" STUCCO (REFER TO GENERAL NOTES)
2. CONTINUOUS G.I. STUCCO SCREED (REFER TO DETAIL)
3. APPROVED SPARK ARRESTER BY FIREPLACE MFR.
4. G.I. SADDLE AND FLASHING
5. G.I. CHIMNEY CAP BY FIREPLACE MFR.
6. G.I. FLASHING
7. ROOF MATERIAL (REFER TO ROOF NOTES)
8. STUCCO SOFFIT O/ METAL LATH O/ BUILDING PAPER
9. ATTIC VENT (REFER TO ATTIC VENT CALCS)
10. 3X6 RAFTER TAILS
11. RE/S FASCIA OR BARGE BOARD. SEE ELEVATIONS FOR SIZE.
12. RE/S TRIM. SEE ELEVATIONS FOR SIZE.
13. STUCCO OVER 2X TRIM
14. POT SHELF (REFER TO DETAIL)
15. LINE OF CEILING
16. LINE OF SHELF
17. LINE OF ROOF ABOVE
18. DECORATIVE FOAM PIPE
19. TYPICAL EXTERIOR SIDING
20. DECORATIVE TILE
21. WOOD SHUTTERS (NON ACTIVE)
22. WOOD CORBEL
23. STUCCO RECESS
24. FINISH COAT OVER FOAM TRIM. (REFER TO DETAIL)
25. ELDORADO STONE (ER-602) OR APPROVED EQUAL
26. WOOD OUTLOOKER
27. SECTIONAL GARAGE DOOR
28. WOOD RAIL OR W.I. RAIL (REFER TO DETAIL)
29. EXTERIOR GRADE PLYWOOD SOFFIT
30. 14" X 18" G.I. SCREENED AND LOUVERED COMBUSTION AIR VENT

KPI Inc.
KNITTER PARTNERS INTERNATIONAL, INC.
architecture & planning
1401 DOVE ST. SUITE 240
NEWPORT BEACH, CA 92660
PHONE: (949) 752-1177
FAX: (949) 752-0151
WWW.KNITTER.COM

©KNITTER PARTNERS INTERNATIONAL
ALL RIGHTS RESERVED 2013

THIS DOCUMENT IS THE PROPERTY AND COPYRIGHT OF KNITTER PARTNERS INTERNATIONAL, INC. AND SHALL NOT BE USE ON ANY OTHER WORK, BE REPRODUCED OR DISCLOSED TO OTHERS EXCEPT BY WRITTEN AUTHORIZATION FROM KNITTER PARTNERS INTERNATIONAL, INC.

NO.	DATE	REVISION
△		
△		
△		
△		
△		

IMAGINE DEVELOPMENT L.L.C.

THE COLONY 65
LANCASTER, CALIFORNIA

LICENSED ARCHITECT
MICHAEL J. KNITTER
C10524
REN. 4-30-19
STATE OF CALIFORNIA

PROJECT INFO
PLAN 3

JOB NUMBER **3036**
PROJECT MGR. RC
DRAWN BY AD
PLOT DATE: 3-6-2018

SHEET TITLE
ELEVATION 'B' FRONT & LEFT ELEVATION

SHEET NUMBER
3.11

PLOT TIME: 11:08 AM PATH\NAME: G:\0_KPI\2013\3036 COLONY 65 PLANS\PLAN 3\3036 33 ELEVATION 3.DC5

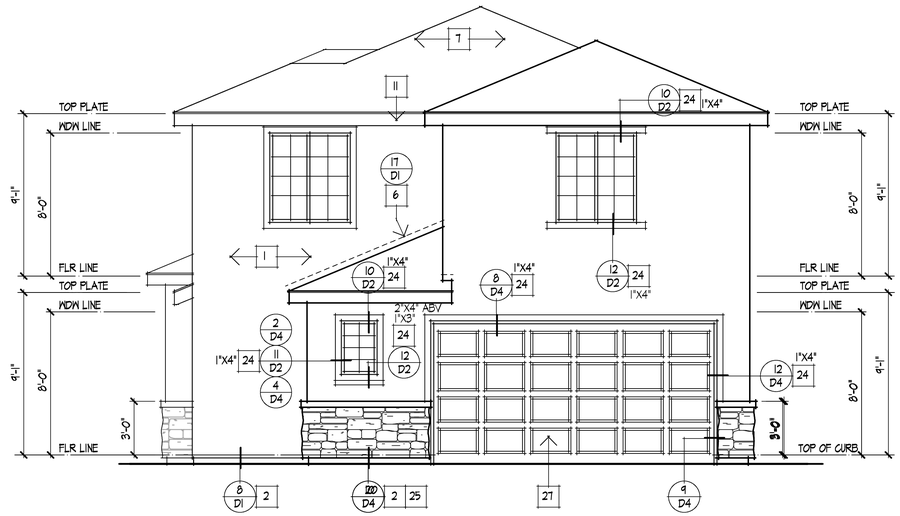

RIGHT B

SCALE: 1/4" = 1'-0"

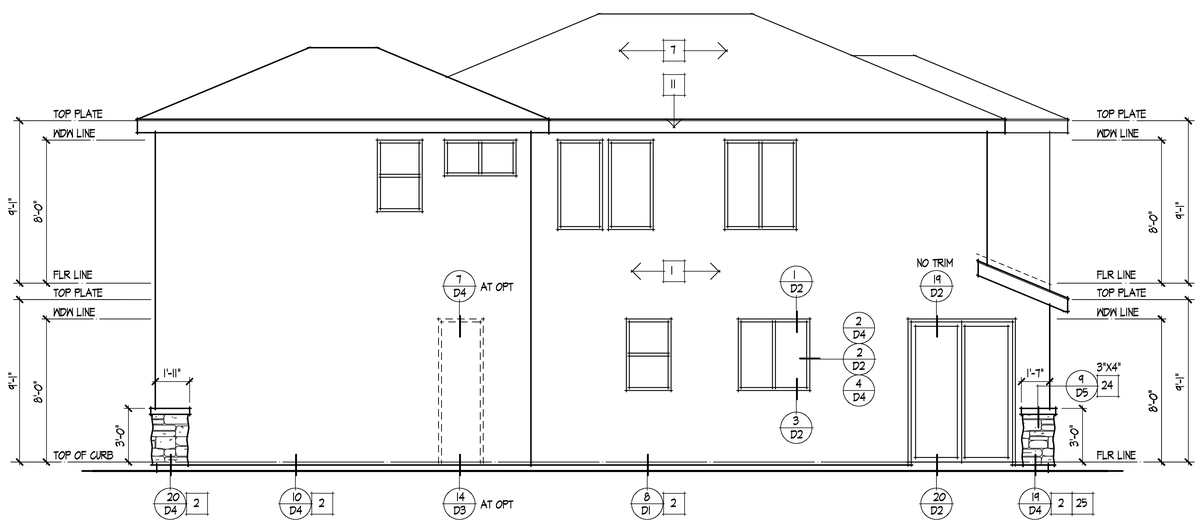

REAR B

SCALE: 1/4" = 1'-0"

ELEVATION NOTES

1. 7/8" STUCCO (REFER TO GENERAL NOTES)
2. CONTINUOUS G.I. STUCCO SCREED (REFER TO DETAIL)
3. APPROVED SPARK ARRESTER BY FIREPLACE MFR.
4. G.I. SADDLE AND FLASHING
5. G.I. CHIMNEY CAP BY FIREPLACE MFR.
6. G.I. FLASHING
7. ROOF MATERIAL (REFER TO ROOF NOTES)
8. STUCCO SOFFIT O/ METAL LATH O/ BUILDING PAPER
9. ATTIC VENT (REFER TO ATTIC VENT CALCS)
10. 3X6 RAFTER TAILS
11. RE/S FASCIA OR BARGE BOARD. SEE ELEVATIONS FOR SIZE.
12. RE/S TRIM. SEE ELEVATIONS FOR SIZE.
13. STUCCO OVER 2X TRIM
14. POT SHELF (REFER TO DETAIL)
15. LINE OF CEILING
16. LINE OF SHELF
17. LINE OF ROOF ABOVE
18. DECORATIVE FOAM PIPE
19. TYPICAL EXTERIOR SIDING
20. DECORATIVE TILE
21. WOOD SHUTTERS (NON ACTIVE)
22. WOOD CORBEL
23. STUCCO RECESS
24. FINISH COAT OVER FOAM TRIM. (REFER TO DETAIL)
25. ELDORADO STONE (ER-602) OR APPROVED EQUAL
26. WOOD OUTLOOKER
27. SECTIONAL GARAGE DOOR
28. WOOD RAIL OR W.I. RAIL (REFER TO DETAIL)
29. EXTERIOR GRADE PLYWOOD SOFFIT
30. 14" X 18" G.I. SCREENED AND LOUVERED COMBUSTION AIR VENT

KPI INC.
KNITTER PARTNERS INTERNATIONAL, INC.
architecture & planning
1401 DOVE ST. SUITE 240
NEWPORT BEACH, CA 92660
PHONE: (949) 752-1177
FAX: (949) 752-0151
WWW.KNITTER.COM

©KNITTER PARTNERS INTERNATIONAL
ALL RIGHTS RESERVED 2013

THIS DOCUMENT IS THE PROPERTY AND COPYRIGHT OF KNITTER PARTNERS INTERNATIONAL, INC. AND SHALL NOT BE USE ON ANY OTHER WORK, BE REPRODUCED OR DISCLOSED TO OTHERS EXCEPT BY WRITTEN AUTHORIZATION FROM KNITTER PARTNERS INTERNATIONAL, INC.

NO.	DATE	REVISION
△		
△		
△		
△		
△		

IMAGINE DEVELOPMENT L.L.C.

THE COLONY 65
LANCASTER, CALIFORNIA

LICENSED ARCHITECT
MICHAEL J. KNITTER
C10524
REN. 4-30-19
STATE OF CALIFORNIA

PROJECT INFO
PLAN 3

JOB NUMBER **3036**
PROJECT MGR. RC
DRAWN BY AD
PLOT DATE: 3-6-2018

SHEET TITLE
ELEVATION 'B' RIGHT & REAR ELEVATIONS

SHEET NUMBER
3.12

PLOT TIME: 11:08 AM PATH\NAME: G:\0_KPI\2013\3036 COLONY 65 PLANS\PLAN 3\3036 33 ELEVATION 3.DC5

FRONT C

SCALE: 1/4" = 1'-0"

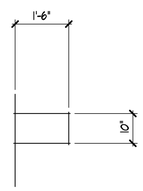

A WOOD OUTLOOKER
SCALE: 1/2" = 1'-0"

LEFT C

SCALE: 1/4" = 1'-0"

SEE SHEET 3.2.1 & 3.3.1 FOR ADDENDA INFORMATION PER ELEVATION.

ELEVATION NOTES

1. 7/8" STUCCO (REFER TO GENERAL NOTES)
2. CONTINUOUS G.I. STUCCO SCREED (REFER TO DETAIL)
3. APPROVED SPARK ARRESTER BY FIREPLACE MFR.
4. G.I. SADDLE AND FLASHING
5. G.I. CHIMNEY CAP BY FIREPLACE MFR.
6. G.I. FLASHING
7. ROOF MATERIAL (REFER TO ROOF NOTES)
8. STUCCO SOFFIT O/ METAL LATH O/ BUILDING PAPER
9. ATTIC VENT (REFER TO ATTIC VENT CALCS)
10. 3X6 RAFTER TAILS
11. RE/S FASCIA OR BARGE BOARD. SEE ELEVATIONS FOR SIZE.
12. RE/S TRIM. SEE ELEVATIONS FOR SIZE.
13. STUCCO OVER 2X TRIM
14. POT SHELF (REFER TO DETAIL)
15. LINE OF CEILING
16. LINE OF SHELF
17. LINE OF ROOF ABOVE
18. DECORATIVE FOAM PIPE
19. TYPICAL EXTERIOR SIDING
20. DECORATIVE TILE
21. WOOD SHUTTERS (NON ACTIVE)
22. WOOD CORBEL
23. STUCCO RECESS
24. FINISH COAT OVER FOAM TRIM. (REFER TO DETAIL)
25. ELDORADO STONE (ER-602) OR APPROVED EQUAL
26. WOOD OUTLOOKER
27. SECTIONAL GARAGE DOOR
28. WOOD RAIL OR W.I. RAIL (REFER TO DETAIL)
29. EXTERIOR GRADE PLYWOOD SOFFIT
30. 14" X 18" G.I. SCREENED AND LOUVERED COMBUSTION AIR VENT

KPI INC.
KNITTER PARTNERS INTERNATIONAL, INC.
architecture & planning
1401 DOVE ST. SUITE 240
NEWPORT BEACH, CA 92660
PHONE: (949) 752-1177
FAX: (949) 752-0151
WWW.KNITTER.COM

©KNITTER PARTNERS INTERNATIONAL
ALL RIGHTS RESERVED 2013

THIS DOCUMENT IS THE PROPERTY AND COPYRIGHT OF KNITTER PARTNERS INTERNATIONAL, INC. AND SHALL NOT BE USE ON ANY OTHER WORK, BE REPRODUCED OR DISCLOSED TO OTHERS EXCEPT BY WRITTEN AUTHORIZATION FROM KNITTER PARTNERS INTERNATIONAL, INC.

NO.	DATE	REVISION
△		
△		
△		
△		
△		

IMAGINE DEVELOPMENT L.L.C.

THE COLONY 65
LANCASTER, CALIFORNIA

LICENSED ARCHITECT
MICHAEL J. KNITTER
C10524
REN. 4-30-19
STATE OF CALIFORNIA

PROJECT INFO
PLAN 3

JOB NUMBER **3036**
PROJECT MGR. RC
DRAWN BY AD
PLOT DATE: 3-6-2018

SHEET TITLE
ELEVATION 'C' FRONT & LEFT ELEVATION

SHEET NUMBER
3.13

PLOT TIME: 11:08 AM PATH\NAME: G:\0_KPI\2013\3036 COLONY 65 PLANS\PLAN 3\3036 33 ELEVATION 3.DC5

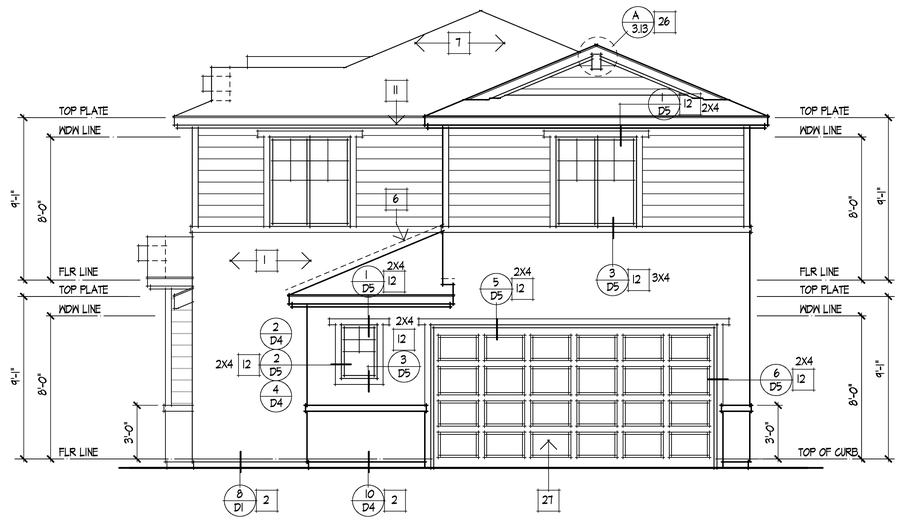

RIGHT C

SCALE: 1/4" = 1'-0"

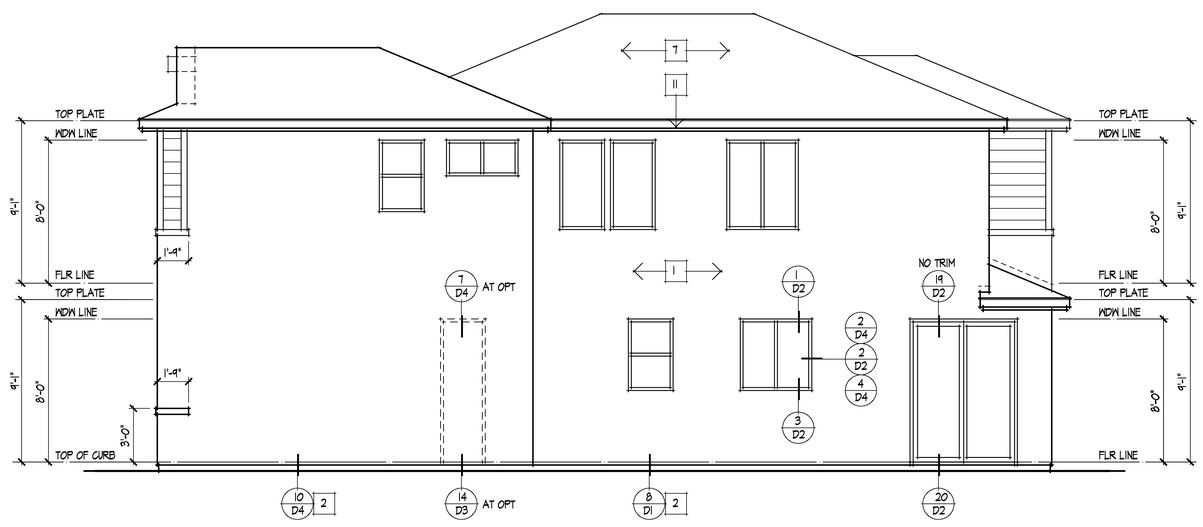

REAR C

SCALE: 1/4" = 1'-0"

ELEVATION NOTES

1. 7/8" STUCCO (REFER TO GENERAL NOTES)
2. CONTINUOUS G.I. STUCCO SCREED (REFER TO DETAIL)
3. APPROVED SPARK ARRESTER BY FIREPLACE MFR.
4. G.I. SADDLE AND FLASHING
5. G.I. CHIMNEY CAP BY FIREPLACE MFR.
6. G.I. FLASHING
7. ROOF MATERIAL (REFER TO ROOF NOTES)
8. STUCCO SOFFIT O/ METAL LATH O/ BUILDING PAPER
9. ATTIC VENT (REFER TO ATTIC VENT CALCS)
10. 3X6 RAFTER TAILS
11. RE/S FASCIA OR BARGE BOARD. SEE ELEVATIONS FOR SIZE.
12. RE/S TRIM. SEE ELEVATIONS FOR SIZE.
13. STUCCO OVER 2X TRIM
14. POT SHELF (REFER TO DETAIL)
15. LINE OF CEILING
16. LINE OF SHELF
17. LINE OF ROOF ABOVE
18. DECORATIVE FOAM PIPE
19. TYPICAL EXTERIOR SIDING
20. DECORATIVE TILE
21. WOOD SHUTTERS (NON ACTIVE)
22. WOOD CORBEL
23. STUCCO RECESS
24. FINISH COAT OVER FOAM TRIM. (REFER TO DETAIL)
25. ELDORADO STONE (ER-602) OR APPROVED EQUAL
26. WOOD OUTLOOKER
27. SECTIONAL GARAGE DOOR
28. WOOD RAIL OR W.I. RAIL (REFER TO DETAIL)
29. EXTERIOR GRADE PLYWOOD SOFFIT
30. 14" X 18" G.I. SCREENED AND LOUVERED COMBUSTION AIR VENT

KPI INC.
KNITTER PARTNERS INTERNATIONAL, INC.
architecture & planning
1401 DOVE ST. SUITE 240
NEWPORT BEACH, CA 92660
PHONE: (949) 752-1177
FAX: (949) 752-0151
WWW.KNITTER.COM

©KNITTER PARTNERS INTERNATIONAL
ALL RIGHTS RESERVED 2013

THIS DOCUMENT IS THE PROPERTY AND COPYRIGHT OF KNITTER PARTNERS INTERNATIONAL, INC. AND SHALL NOT BE USE ON ANY OTHER WORK, BE REPRODUCED OR DISCLOSED TO OTHERS EXCEPT BY WRITTEN AUTHORIZATION FROM KNITTER PARTNERS INTERNATIONAL, INC.

NO.	DATE	REVISION

IMAGINE DEVELOPMENT L.L.C.

THE COLONY 65
LANCASTER, CALIFORNIA

LICENSED ARCHITECT
MICHAEL J. KNITTER
C10524
REN. 4-30-19
STATE OF CALIFORNIA

PROJECT INFO
PLAN 3

JOB NUMBER **3036**
PROJECT MGR. RC
DRAWN BY AD
PLOT DATE: 3-6-2018

SHEET TITLE
ELEVATION 'C' RIGHT & REAR ELEVATIONS

SHEET NUMBER
3.14

PLOT TIME: 11:08 AM PATH\NAME: G:\0_KPI\2013\3036 COLONY 65 PLANS\PLAN 3\3036 33 ELEVATION 3.DC5

FRONT D

SCALE: 1/4" = 1'-0"

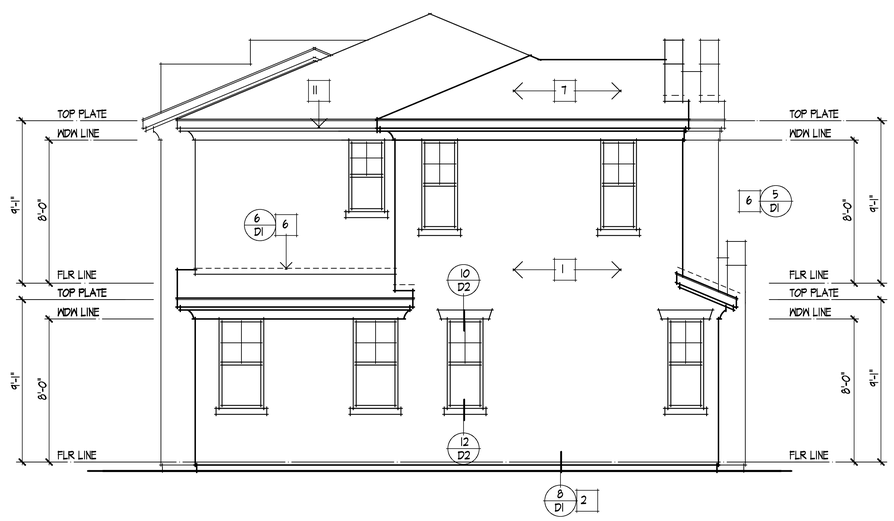

LEFT D

SCALE: 1/4" = 1'-0"

SEE SHEET 3.2.2 & 3.3.2 FOR ADDENDA INFORMATION PER ELEVATION.

ELEVATION NOTES

1. 7/8" STUCCO (REFER TO GENERAL NOTES)
2. CONTINUOUS G.I. STUCCO SCREED (REFER TO DETAIL)
3. APPROVED SPARK ARRESTER BY FIREPLACE MFR.
4. G.I. SADDLE AND FLASHING
5. G.I. CHIMNEY CAP BY FIREPLACE MFR.
6. G.I. FLASHING
7. ROOF MATERIAL (REFER TO ROOF NOTES)
8. STUCCO SOFFIT O/ METAL LATH O/ BUILDING PAPER
9. ATTIC VENT (REFER TO ATTIC VENT CALCS)
10. 3X6 RAFTER TAILS
11. RE/S FASCIA OR BARGE BOARD. SEE ELEVATIONS FOR SIZE.
12. RE/S TRIM. SEE ELEVATIONS FOR SIZE.
13. STUCCO OVER 2X TRIM
14. POT SHELF (REFER TO DETAIL)
15. LINE OF CEILING
16. LINE OF SHELF
17. LINE OF ROOF ABOVE
18. DECORATIVE FOAM PIPE
19. TYPICAL EXTERIOR SIDING
20. DECORATIVE TILE
21. WOOD SHUTTERS (NON ACTIVE)
22. WOOD CORBEL
23. STUCCO RECESS
24. FINISH COAT OVER FOAM TRIM. (REFER TO DETAIL)
25. ELDORADO STONE (ER-602) OR APPROVED EQUAL
26. WOOD OUTLOOKER
27. SECTIONAL GARAGE DOOR
28. WOOD RAIL OR W.I. RAIL (REFER TO DETAIL)
29. EXTERIOR GRADE PLYWOOD SOFFIT
30. 14" X 18" G.I. SCREENED AND LOUVERED COMBUSTION AIR VENT

KPI INC.
KNITTER PARTNERS INTERNATIONAL, INC.
architecture & planning
1401 DOVE ST. SUITE 240
NEWPORT BEACH, CA 92660
PHONE: (949) 752-1177
FAX: (949) 752-0151
WWW.KNITTER.COM

©KNITTER PARTNERS INTERNATIONAL
ALL RIGHTS RESERVED 2013

THIS DOCUMENT IS THE PROPERTY AND COPYRIGHT OF KNITTER PARTNERS INTERNATIONAL, INC. AND SHALL NOT BE USE ON ANY OTHER WORK, BE REPRODUCED OR DISCLOSED TO OTHERS EXCEPT BY WRITTEN AUTHORIZATION FROM KNITTER PARTNERS INTERNATIONAL, INC.

NO.	DATE	REVISION
△		
△		
△		
△		
△		

IMAGINE DEVELOPMENT L.L.C.

THE COLONY 65
LANCASTER, CALIFORNIA

LICENSED ARCHITECT
MICHAEL J. KNITTER
C10524
REN. 4-30-19
STATE OF CALIFORNIA

PROJECT INFO
PLAN 3

JOB NUMBER **3036**
PROJECT MGR. RC
DRAWN BY AD
PLOT DATE: 3-6-2018

SHEET TITLE
ELEVATION 'D' FRONT & LEFT ELEVATION

SHEET NUMBER
3.15

PLOT TIME: 11:08 AM PATH\NAME: G:\0_KPI\2013\3036 COLONY 65 PLANS\PLAN 3\3036 33 ELEVATION 3.DC5

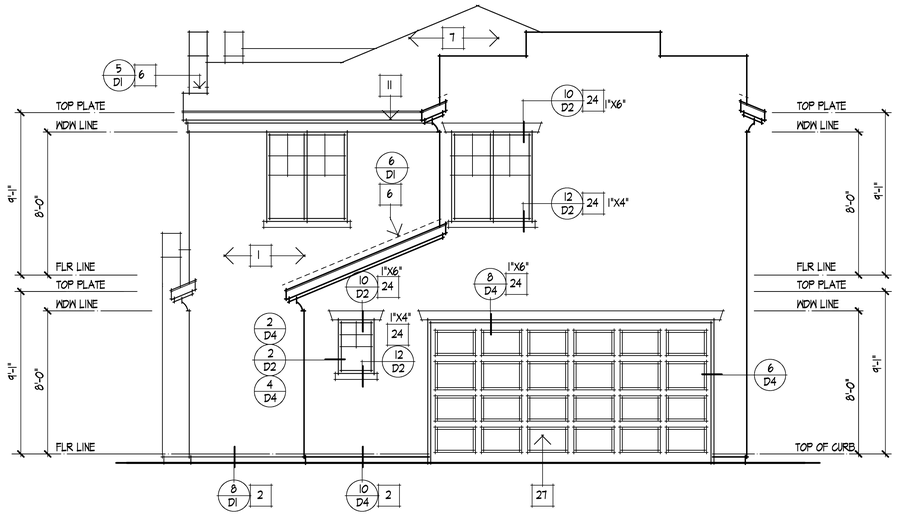

RIGHT D

SCALE: 1/4" = 1'-0"

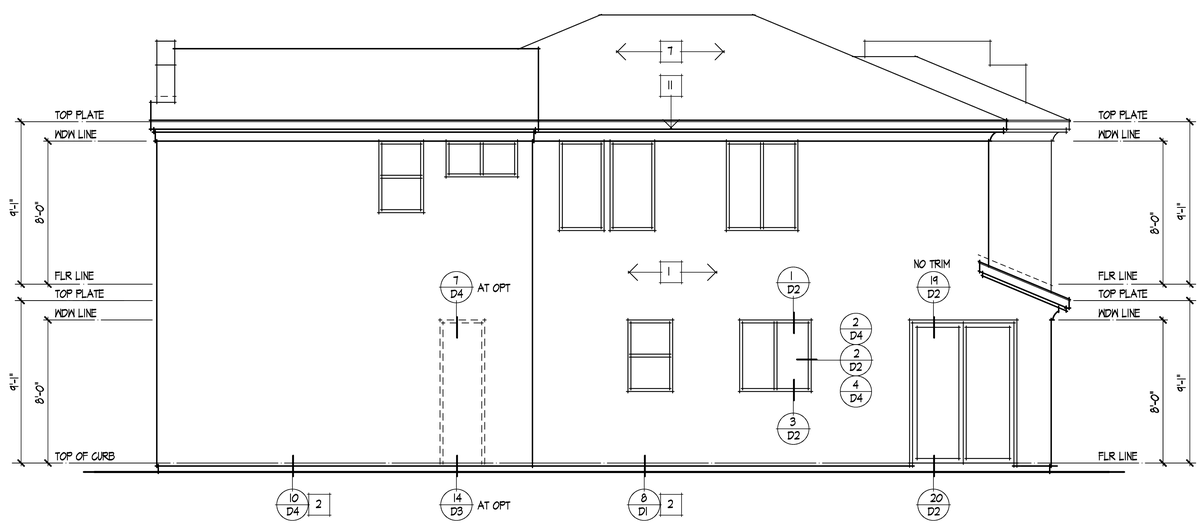

REAR D

SCALE: 1/4" = 1'-0"

ELEVATION NOTES

1. 7/8" STUCCO (REFER TO GENERAL NOTES)
2. CONTINUOUS G.I. STUCCO SCREED (REFER TO DETAIL)
3. APPROVED SPARK ARRESTER BY FIREPLACE MFR.
4. G.I. SADDLE AND FLASHING
5. G.I. CHIMNEY CAP BY FIREPLACE MFR.
6. G.I. FLASHING
7. ROOF MATERIAL (REFER TO ROOF NOTES)
8. STUCCO SOFFIT O/ METAL LATH O/ BUILDING PAPER
9. ATTIC VENT (REFER TO ATTIC VENT CALCS)
10. 3X6 RAFTER TAILS
11. RE/S FASCIA OR BARGE BOARD. SEE ELEVATIONS FOR SIZE.
12. RE/S TRIM. SEE ELEVATIONS FOR SIZE.
13. STUCCO OVER 2X TRIM
14. POT SHELF (REFER TO DETAIL)
15. LINE OF CEILING
16. LINE OF SHELF
17. LINE OF ROOF ABOVE
18. DECORATIVE FOAM PIPE
19. TYPICAL EXTERIOR SIDING
20. DECORATIVE TILE
21. WOOD SHUTTERS (NON ACTIVE)
22. WOOD CORBEL
23. STUCCO RECESS
24. FINISH COAT OVER FOAM TRIM. (REFER TO DETAIL)
25. ELDORADO STONE (ER-602) OR APPROVED EQUAL
26. WOOD OUTLOOKER
27. SECTIONAL GARAGE DOOR
28. WOOD RAIL OR W.I. RAIL (REFER TO DETAIL)
29. EXTERIOR GRADE PLYWOOD SOFFIT
30. 14" X 18" G.I. SCREENED AND LOUVERED COMBUSTION AIR VENT

KPI INC.
KNITTER PARTNERS INTERNATIONAL, INC.
architecture & planning
1401 DOVE ST. SUITE 240
NEWPORT BEACH, CA 92660
PHONE: (949) 752-1177
FAX: (949) 752-0151
WWW.KNITTER.COM

©KNITTER PARTNERS INTERNATIONAL
ALL RIGHTS RESERVED 2013

THIS DOCUMENT IS THE PROPERTY AND COPYRIGHT OF KNITTER PARTNERS INTERNATIONAL, INC. AND SHALL NOT BE USE ON ANY OTHER WORK, BE REPRODUCED OR DISCLOSED TO OTHERS EXCEPT BY WRITTEN AUTHORIZATION FROM KNITTER PARTNERS INTERNATIONAL, INC.

NO.	DATE	REVISION

IMAGINE DEVELOPMENT L.L.C.

THE COLONY 65
LANCASTER, CALIFORNIA

LICENSED ARCHITECT
MICHAEL J. KNITTER
C10524
REN. 4-30-19
STATE OF CALIFORNIA

PROJECT INFO
PLAN 3

JOB NUMBER **3036**
PROJECT MGR. RC
DRAWN BY AD
PLOT DATE: 3-6-2018

SHEET TITLE
ELEVATION 'D' RIGHT & REAR ELEVATIONS

SHEET NUMBER
3.16

PLOT TIME: 11:08 AM PATH\NAME: G:\0_KPI\2013\3036 COLONY 65 PLANS\PLAN 3\3036 33 ELEVATION 3.DC5

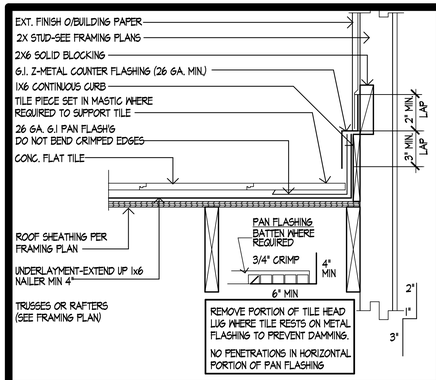

ROOF TO WALL FLASHING — INSTALL ROOFING PER MFG PUBLISHED RECOMMENDATIONS — **17**

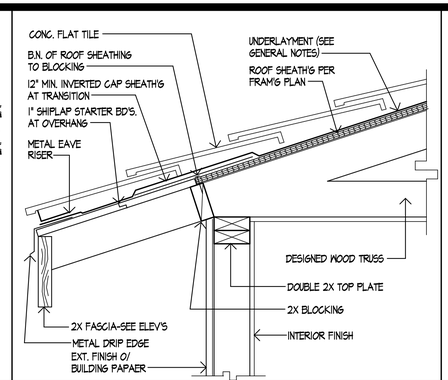

EAVE AT TRUSSES — INSTALL ROOFING PER MFG PUBLISHED RECOMMENDATIONS — **13**

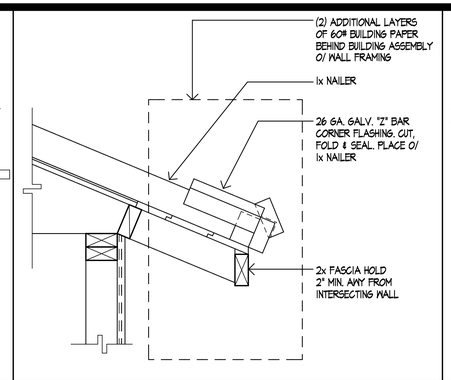

EAVE AT INTERSECTING WALL — **9**

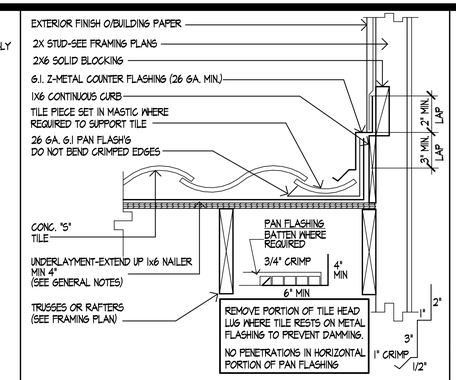

ROOF TO WALL FLASHING — INSTALL ROOFING PER MFG PUBLISHED RECOMMENDATIONS — **5**

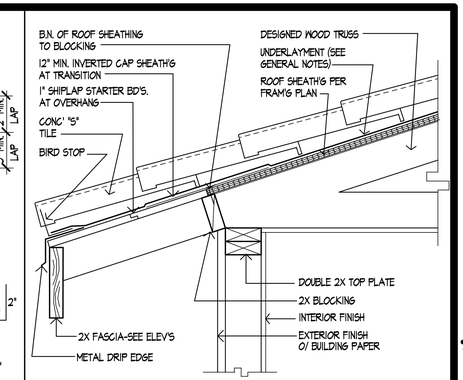

EAVE AT TRUSSES — INSTALL ROOFING PER MFG PUBLISHED RECOMMENDATIONS — **1**

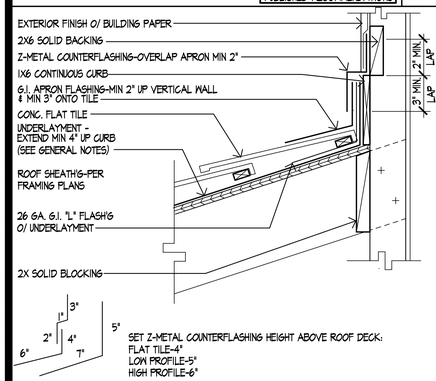

ROOF TO WALL FLASHING — INSTALL ROOFING PER MFG PUBLISHED RECOMMENDATIONS — **18**

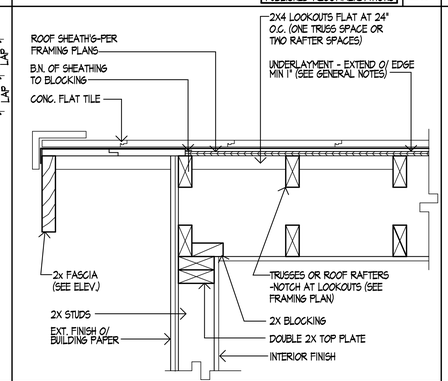

RAKE DETAIL — INSTALL ROOFING PER MFG PUBLISHED RECOMMENDATIONS — **14**

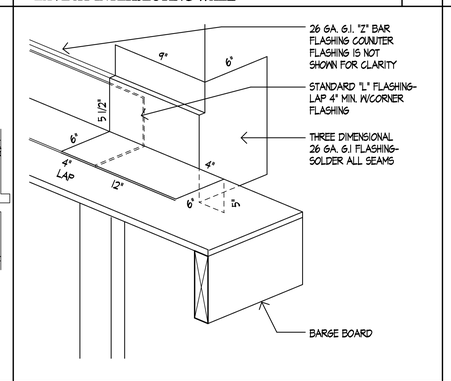

RAKE/CORNER WALL FLASHING — **10**

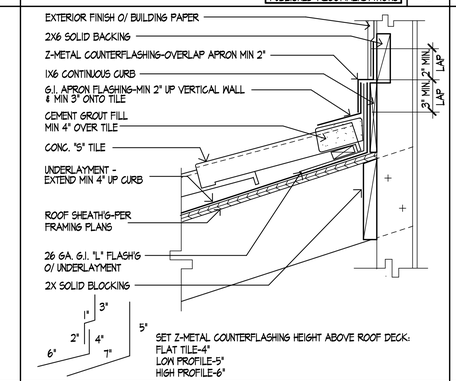

ROOF TO WALL FLASHING — INSTALL ROOFING PER MFG PUBLISHED RECOMMENDATIONS — **6**

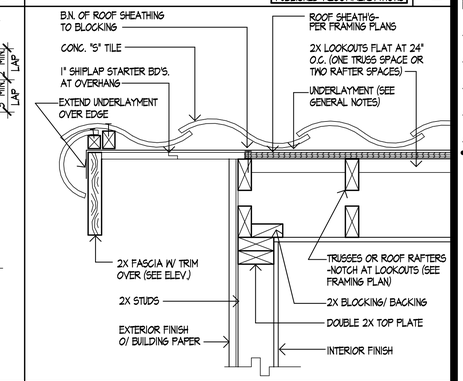

RAKE DETAIL — INSTALL ROOFING PER MFG PUBLISHED RECOMMENDATIONS — **2**

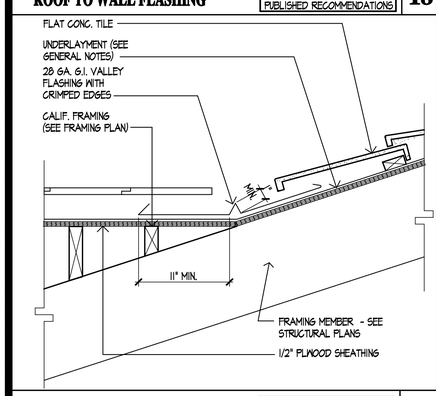

FALSE FRAMING — INSTALL ROOFING PER MFG PUBLISHED RECOMMENDATIONS — **19**

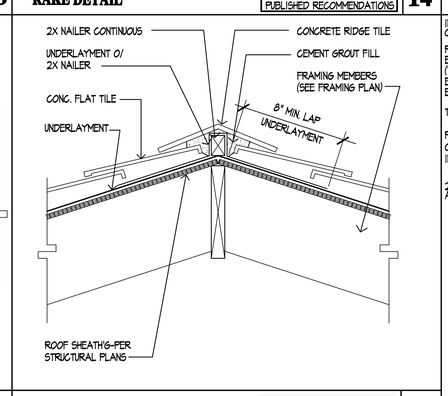

RIDGE CAP — INSTALL ROOFING PER MFG PUBLISHED RECOMMENDATIONS — **15**

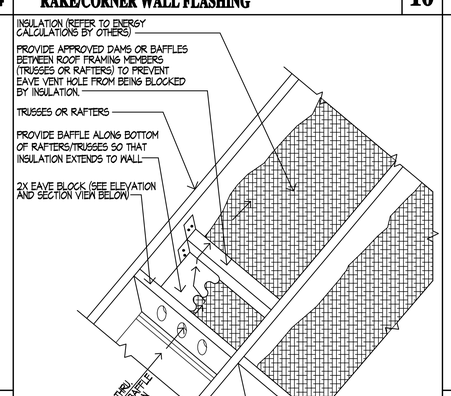

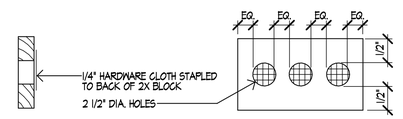

SECTION **ELEVATION**

NOTES:

1. SEE GENERAL NOTES AND PLAN SPECIFICATIONS FOR VENTILATION REQUIREMENTS.
2. BLOCKS W/ RAFTERS AT 16" O.C. PROVIDES APPOXIMATELY 13.5 SQ. IN. OF VENTILATION. BLOCKS W/ TRUSSES AT 24" O.C. PROVIDES APPOXIMATELY 18 SQ. IN. OF VENTILATION.
3. MINIMUM BLOCK SIZE W/ RAFTERS AT 16" O.C. 2 X 4 X 14 1/2" (3 HOLES). MINIMUM BLOCK SIZE W/ TRUSSES AT 24" O.C. 2 X 4 X 22" (4 HOLES).
4. TYPICAL ATTIC - 1 VENT BLOCK AT EVERY THIRD BAY.
5. SLOPING CEILING - 1 VENT BLOCK AT EACH BAY.

EAVE VENT BLOCK DETAIL — **12**

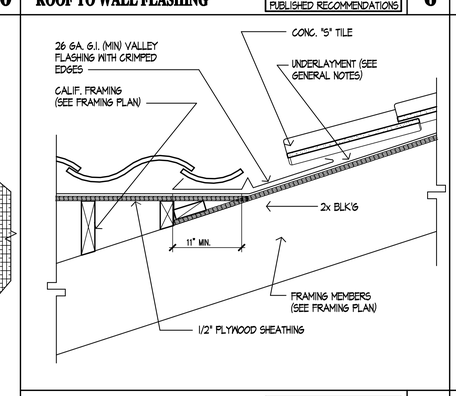

FALSE FRAMING — INSTALL ROOFING PER MFG PUBLISHED RECOMMENDATIONS — **7**

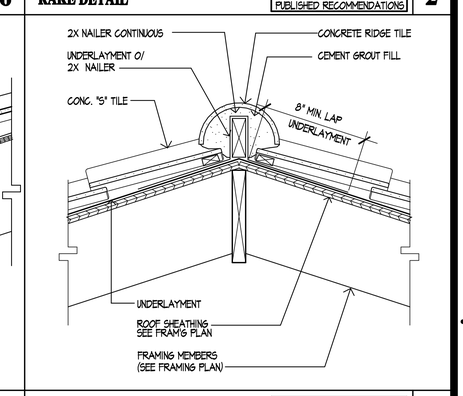

RIDGE CAP — INSTALL ROOFING PER MFG PUBLISHED RECOMMENDATIONS — **3**

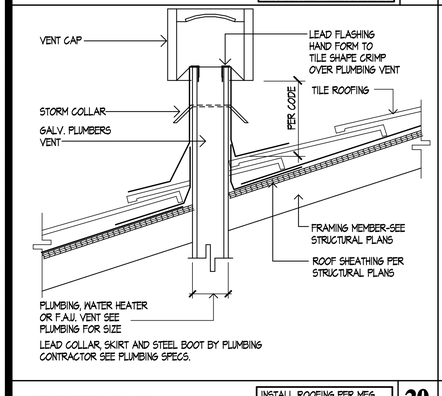

VENT THRU ROOF — INSTALL ROOFING PER MFG PUBLISHED RECOMMENDATIONS — **20**

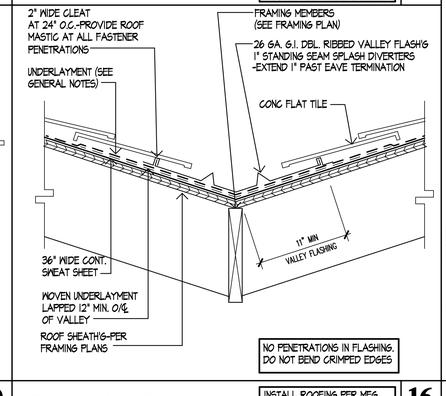

VALLEY FLASHING — INSTALL ROOFING PER MFG PUBLISHED RECOMMENDATIONS — **16**

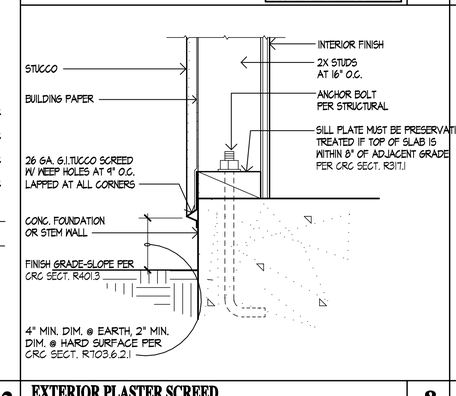

EXTERIOR PLASTER SCREED — **8**

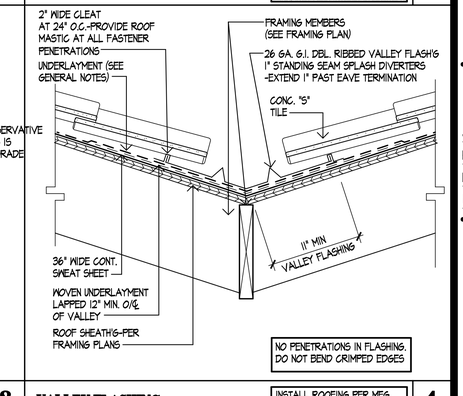

VALLEY FLASHING — INSTALL ROOFING PER MFG PUBLISHED RECOMMENDATIONS — **4**

KPI Inc.

KNITTER PARTNERS INTERNATIONAL, INC.
architecture & planning

1401 DOVE ST. SUITE 240
NEWPORT BEACH, CA 92660
PHONE: (949) 752-1177
FAX: (949) 752-0151
WWW.KNITTER.COM

©KNITTER PARTNERS INTERNATIONAL ALL RIGHTS RESERVED 2013

THIS DOCUMENT IS THE PROPERTY AND COPYRIGHT OF KNITTER PARTNERS INTERNATIONAL, INC. AND SHALL NOT BE USE ON ANY OTHER WORK, BE REPRODUCED OR DISCLOSED TO OTHERS EXCEPT BY WRITTEN AUTHORIZATION FROM KNITTER PARTNERS INTERNATIONAL, INC.

NO.	DATE	REVISION
△		
△		
△		
△		
△		

IMAGINE DEVELOPMENT L.L.C.

THE COLONY 65
LANCASTER, CALIFORNIA

LICENSED ARCHITECT
MICHAEL J. KNITTER
C10524
REN. 4-30-19
STATE OF CALIFORNIA

PROJECT INFO

JOB NUMBER	**3036**
PROJECT MGR.	RC
DRAWN BY	STAFF
PLOT DATE: 3-6-2018	

SHEET TITLE

DETAILS

SHEET NUMBER

D-1

PLOT TIME: 9:10 AM PATH\NAME: G:\O_KPI\2013\13036 COLONY 65 PLANS\NONPLAN\3036 DETAILS.DC5

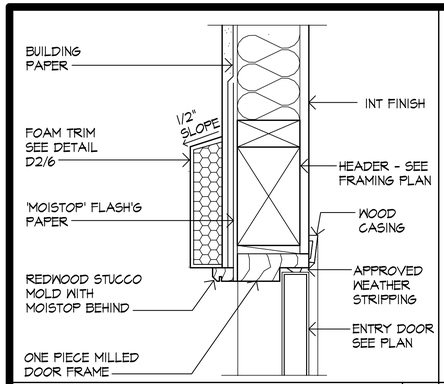

HEAD AT INSWING DOOR 17

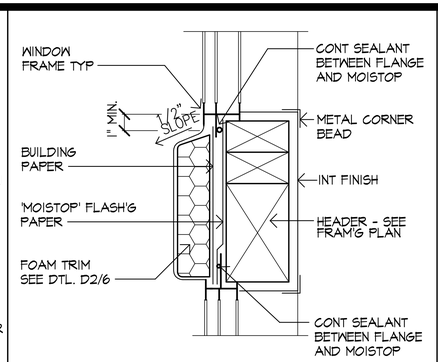

HORIZONTAL MULLION 13

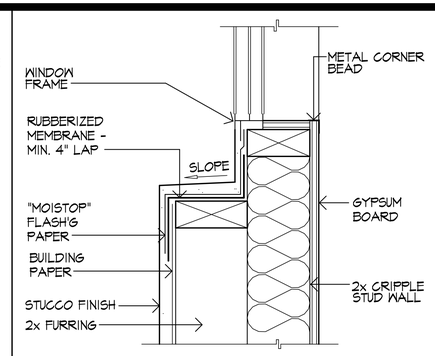

SILL AT FURRING 9

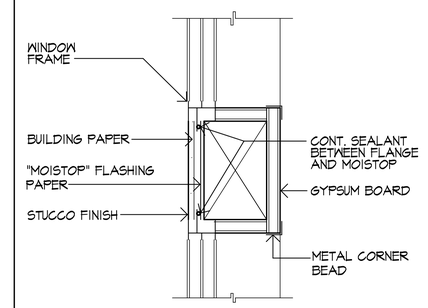

VERTICAL MULLION 5

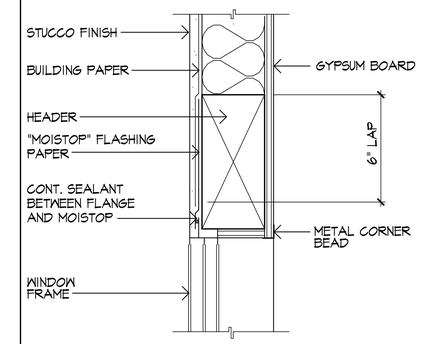

WINDOW HEAD 1

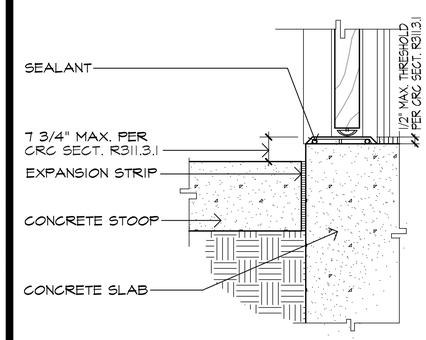

THRESHOLD AT INSWING DOOR 18

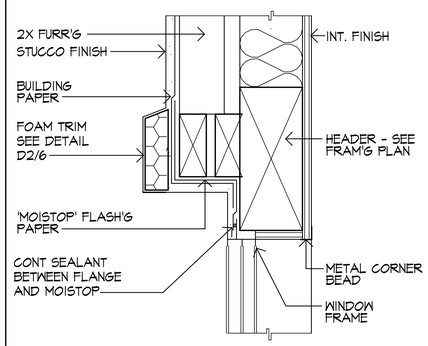

FURRED HEAD AT WINDOW 14

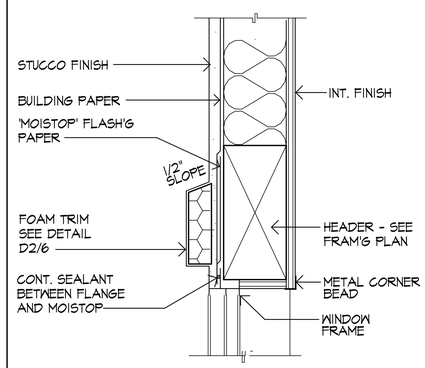

WINDOW HEAD 10

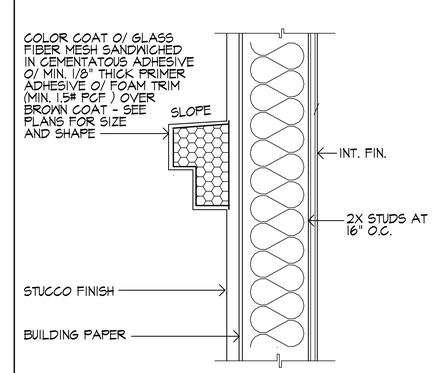

FOAM TRIM BAND 6

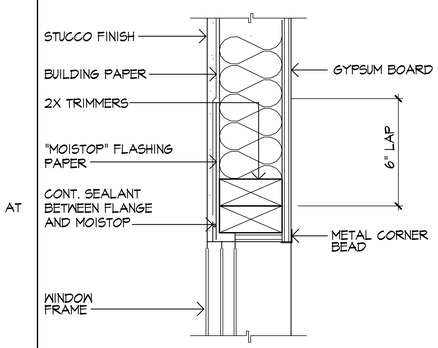

WINDOW JAMB 2

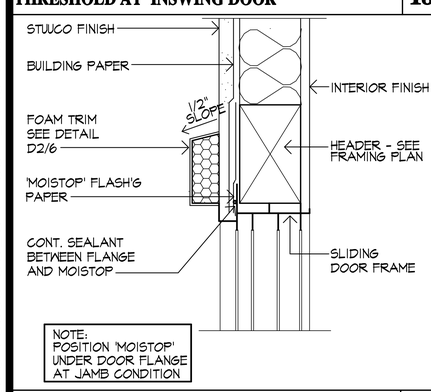

HEAD SLIDING DOOR 19

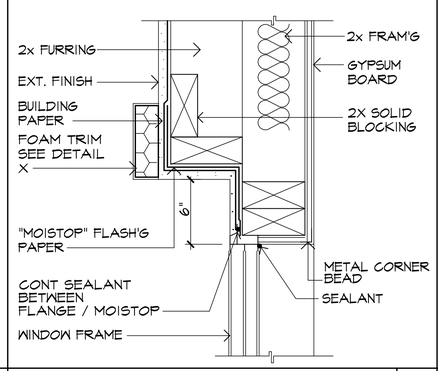

WINDOW JAMB AT FURRING 15

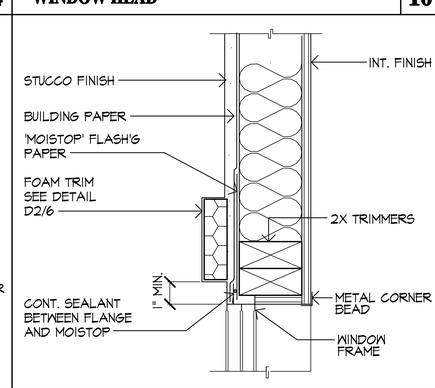

WINDOW JAMB 11

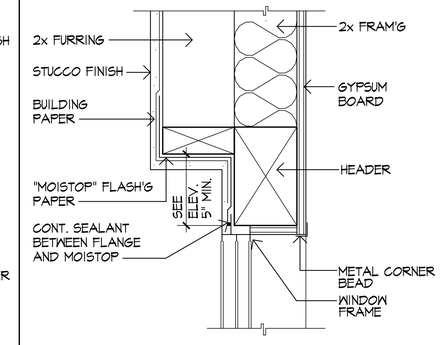

HEAD AT FURRING 7

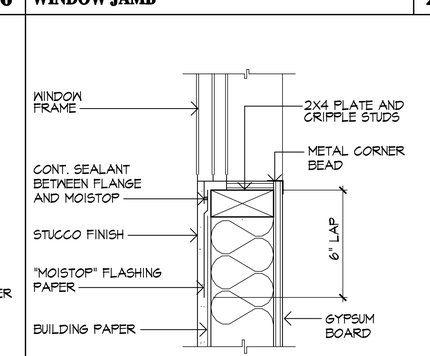

SILL DETAIL 3

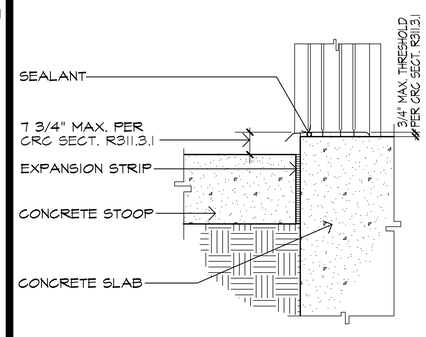

THRESHOLD AT SLIDING DOOR 20

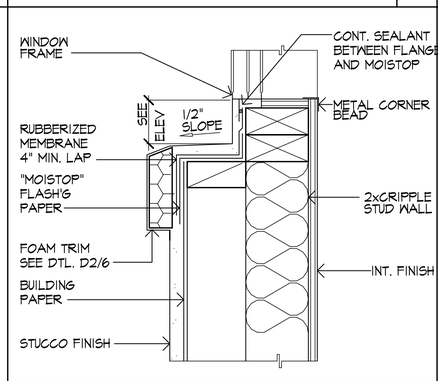

FURRED SILL AT WINDOW 16

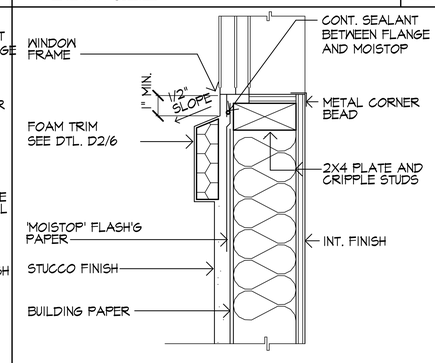

SILL DETAIL 12

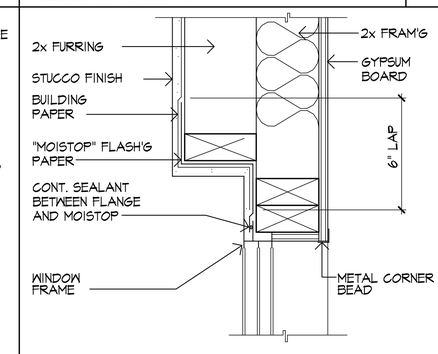

WINDOW JAMB AT FURRING 8

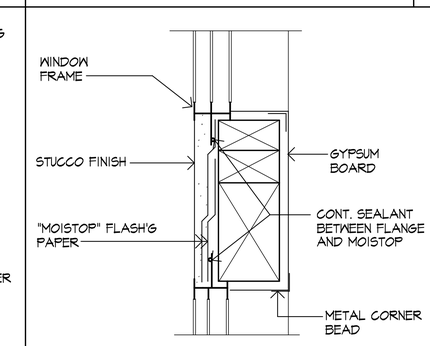

HORIZONTAL MULLION 4

KPI Inc.
KNITTER PARTNERS INTERNATIONAL, INC.
architecture & planning
1401 DOVE ST. SUITE 240
NEWPORT BEACH, CA 92660
PHONE: (949) 752-1177
FAX: (949) 752-0151
WWW.KNITTER.COM

©KNITTER PARTNERS INTERNATIONAL ALL RIGHTS RESERVED 2013

THIS DOCUMENT IS THE PROPERTY AND COPYRIGHT OF KNITTER PARTNERS INTERNATIONAL, INC. AND SHALL NOT BE USE ON ANY OTHER WORK, BE REPRODUCED OR DISCLOSED TO OTHERS EXCEPT BY WRITTEN AUTHORIZATION FROM KNITTER PARTNERS INTERNATIONAL, INC.

NO.	DATE	REVISION

IMAGINE DEVELOPMENT L.L.C.

THE COLONY 65
LANCASTER, CALIFORNIA

LICENSED ARCHITECT
MICHAEL J. KNITTER
C10524
REN. 4-30-19
STATE OF CALIFORNIA

PROJECT INFO

JOB NUMBER	**3036**
PROJECT MGR.	RC
DRAWN BY	STAFF
PLOT DATE: 3-6-2018	

SHEET TITLE

DETAILS

SHEET NUMBER

D-2

PLOT TIME: 9:11 AM PATH\NAME: G:\O_KPI\2013\13036 COLONY 65 PLANS\NONPLAN\3036 DETAILS 2.DC5

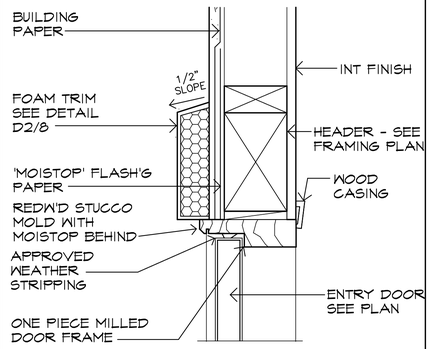

HEAD AT OUTSWING DOOR 17

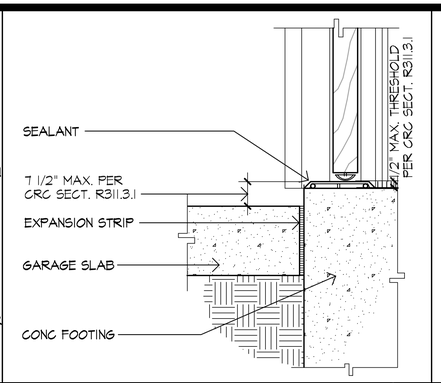

THRESHOLD AT OUTSWING DOOR 13

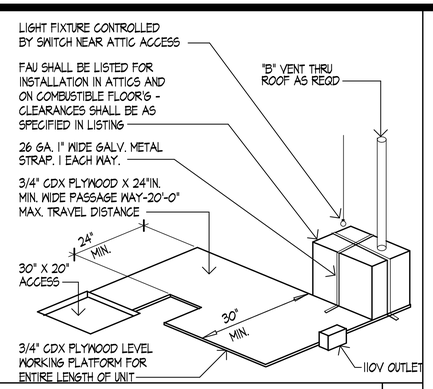

HORIZONTAL ATTIC FAU 9

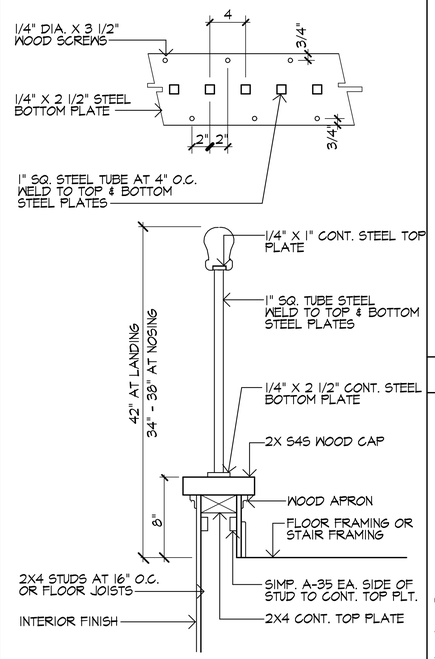

FOR 1 AND 2 FAMILY DWELLINGS ONLY: HANDRAIL ASSEMBLIES AND GUARDS SHALL BE ABLE TO RESIST A SINGLE CONCENTRATED LOAD OF 200 POUNDS, APPLIED IN ANY DIRECTION AT AT ANY POINT ALONG THE TOP, AND HAVE ATTACHMENT DEVICES AND SUPPORTING STRUCTURE TO TRANSFER THIS LOADING TO APPROPRIATE STRUCTURAL ELEMENTS OF THE BUILDING. CRC SECT. R301.5

HANDRAIL DETAIL 6

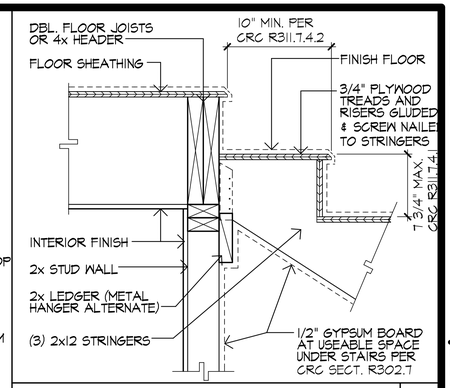

STRINGER AT HEADER 1

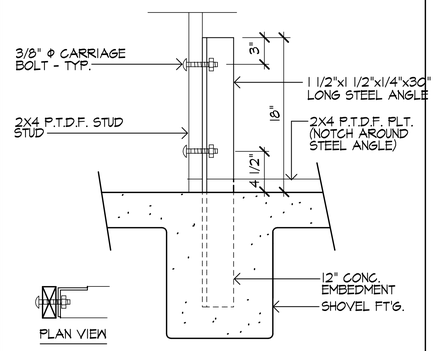

PONY WALL REINFORCEMENT 18

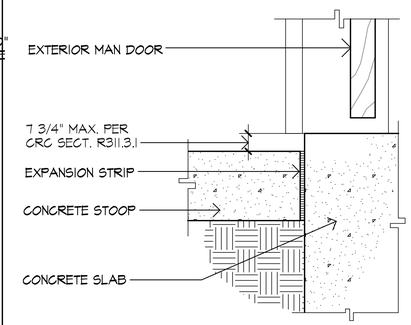

MAN DOOR AT GARAGE (INSWING) 14

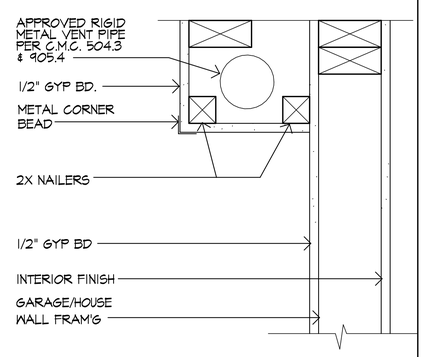

HORIZONTAL DRYER VENT CHASE 10

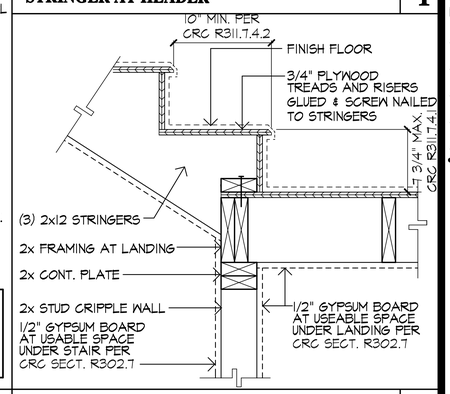

STRINGER AT LANDING 2

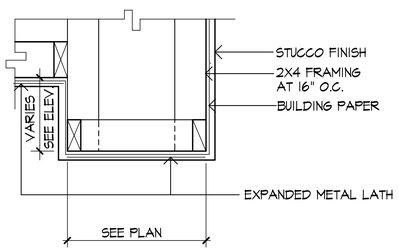

STUCCO SOFFIT 19

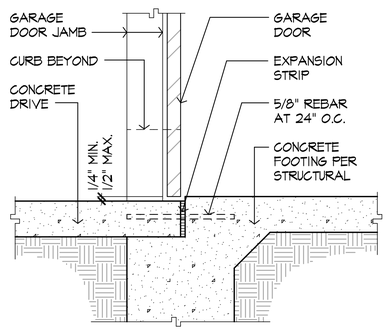

GARAGE SLAB APRON 15

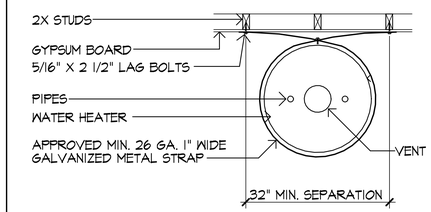

STRAP ANCHOR TO BE INSTALLED IN UPPER AND LOWER 1/3 OF TANK HEIGHT AND MUST NOT OBSTRUCT ANY LABELS, RATINGS, ETC.

WATER HEATER ANCHOR 11

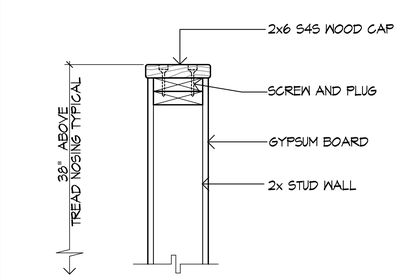

LOW WALL CAP 7

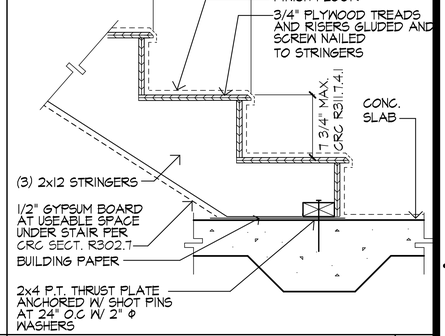

STRINGER AT FLOOR 3

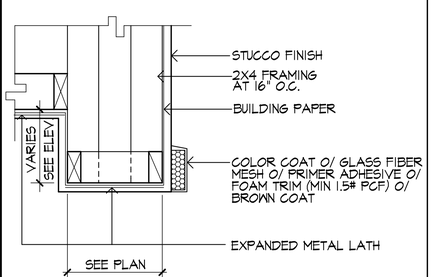

STUCCO SOFFIT W/ FOAM TRIM 20

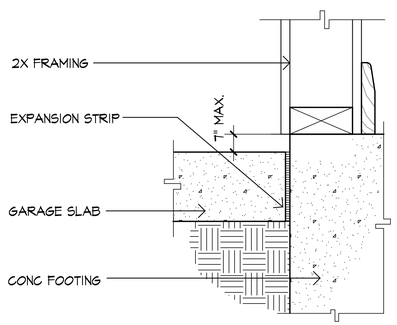

SLAB DROP AT HOUSE TO GARAGE 16

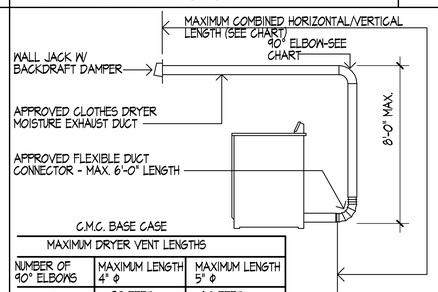

C.M.C. BASE CASE

MAXIMUM DRYER VENT LENGTHS

NUMBER OF 90° ELBOWS	MAXIMUM LENGTH 4" Φ	MAXIMUM LENGTH 5" Φ
0	32 FEET	60 FEET
1	23 FEET	60 FEET
2	14 FEET	60 FEET
3	---	60 FEET

DRYER VENT LENGTH/SIZE REQUIREMENTS 12

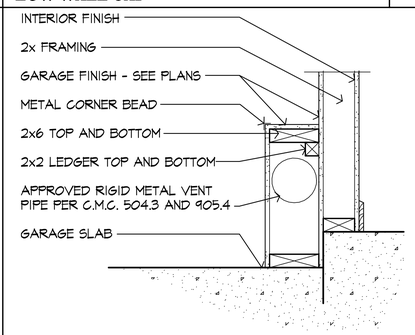

HORIZ. DRYER VENT CHASE 8

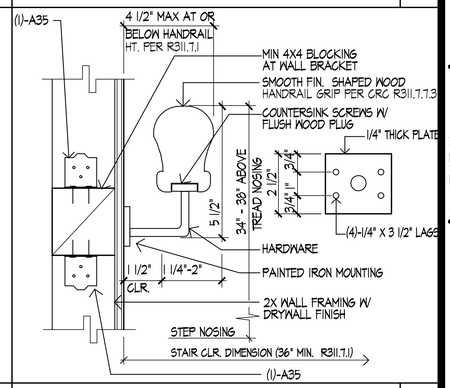

HANDRAIL ATTACHMENT 4

KPI Inc.

KNITTER PARTNERS INTERNATIONAL, INC.
architecture & planning

1401 DOVE ST. SUITE 240
NEWPORT BEACH, CA 92660
PHONE: (949) 752-1177
FAX: (949) 752-0151
WWW.KNITTER.COM

©KNITTER PARTNERS INTERNATIONAL
ALL RIGHTS RESERVED 2013

THIS DOCUMENT IS THE PROPERTY AND COPYRIGHT OF KNITTER PARTNERS INTERNATIONAL, INC. AND SHALL NOT BE USE ON ANY OTHER WORK, BE REPRODUCED OR DISCLOSED TO OTHERS EXCEPT BY WRITTEN AUTHORIZATION FROM KNITTER PARTNERS INTERNATIONAL, INC.

NO.	DATE	REVISION

IMAGINE DEVELOPMENT L.L.C.

THE COLONY 65
LANCASTER, CALIFORNIA

LICENSED ARCHITECT
MICHAEL J. KNITTER
C10524
REN. 4-30-19
STATE OF CALIFORNIA

PROJECT INFO

JOB NUMBER 3036
PROJECT MGR. RC
DRAWN BY STAFF
PLOT DATE: 3-6-2018

SHEET TITLE

DETAILS

SHEET NUMBER

D-3

PLOT TIME: 9:11 AM PATH\NAME: G:\O_KPI\2013\13036 COLONY 65 PLANS\NONPLAN\3036 DETAILS 3DC5

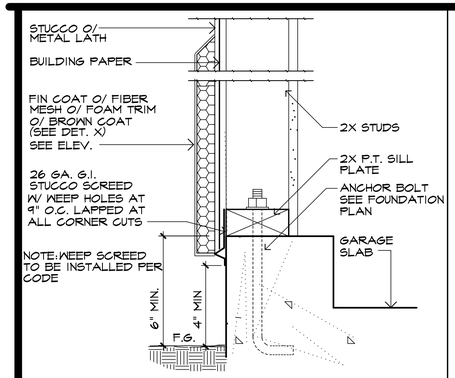

FURRING BASE AT GARAGE CURB 17

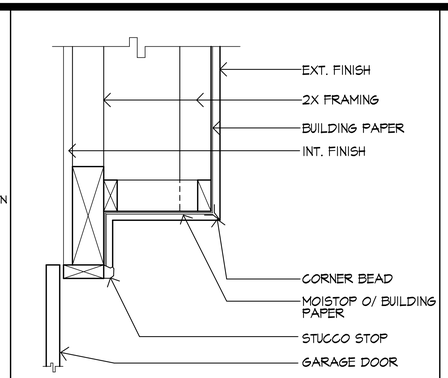

STUCCO SOFFIT AT GARAGE 13

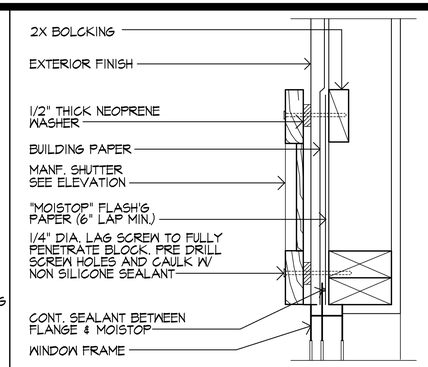

SHUTTER AT JAMB 9

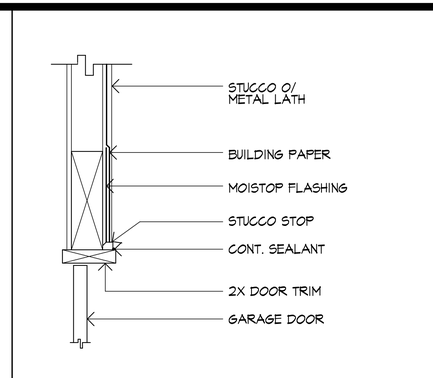

GARAGE HEAD 5

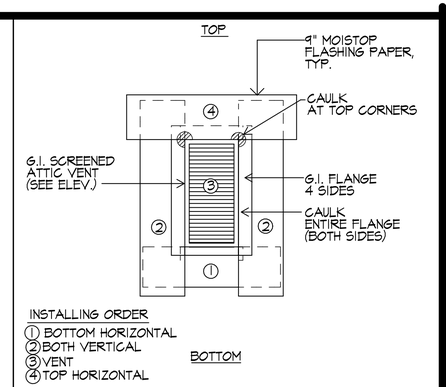

FLASHING AT GABLE END VENTS 1

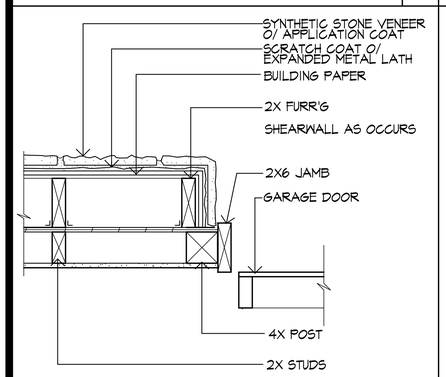

SYNTHETIC STONE AT GARAGE DOOR JAMB 18

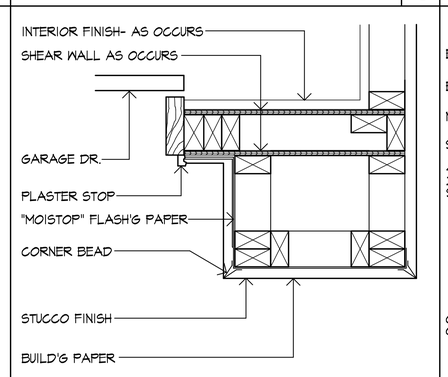

WALL FURRING AT GARAGE 14

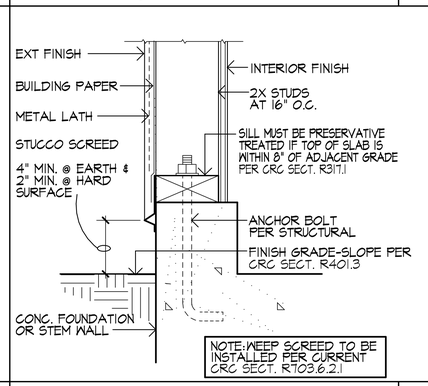

G.I. WEEP SCREED 10

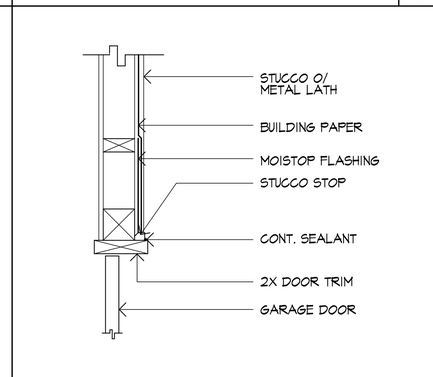

STUCCO JAMB @ GARAGE DOOR 6

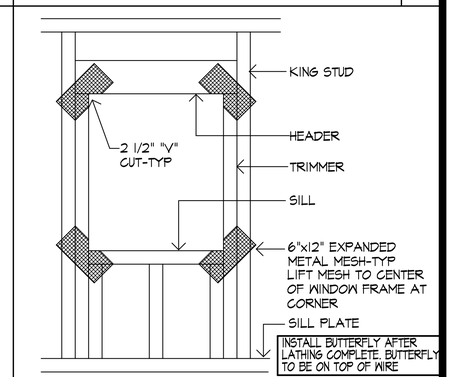

WINDOW CORNER TREATMENT 2

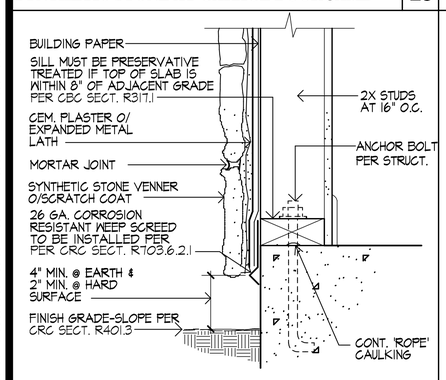

STONE VENEER APPLICATION 19

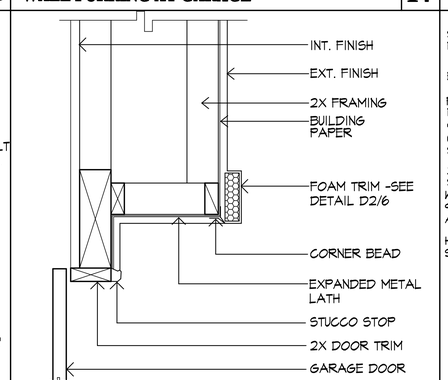

STUCCO SOFFIT AT GARAGE W/ TRIM 15

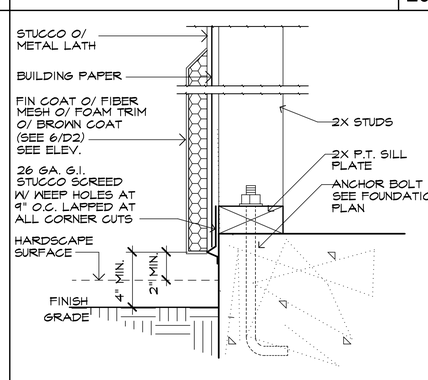

FURRING DETAIL BASE 11

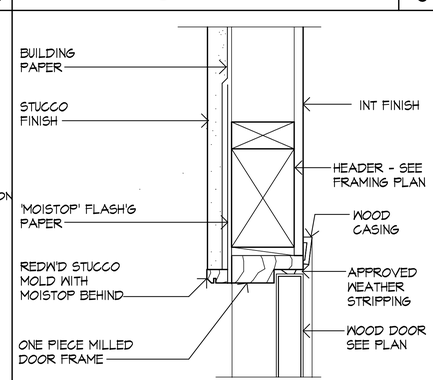

HEAD AT DOOR 7

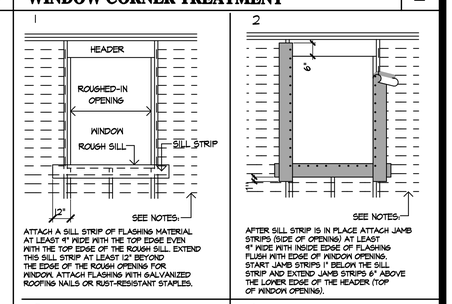

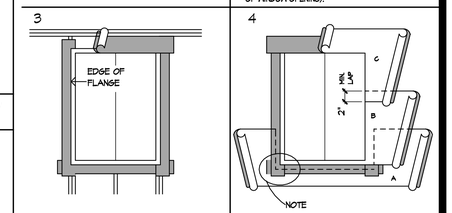

NOTES: SECTION R903.2 OF THE CRC CALLS FOR FLASHING OF ALL EXTERIOR OPENINGS EXPOSED TO WEATHER TO MAKE THEM WEATHER PROOF. SINCE CRC DOES NOT OUTLINE PROCEDURES FOR WINDOW FLASHING, TECHNIQUES SHOWN HERE ARE RECOMMENDED. USE "MOISTOP" FLASHING BY FORTIFIBER CORP., OR EQUAL WHENEVER POSSIBLE FOR FLASHING MATERIAL. CAULK BACK OF WINDOW FRAMES BEFORE SETTING. USE WINDOWS THAT ARE WATERTIGHT.

26 GA. G.I. FLASHING REQUIRED AS SHOWN IN OTHER WINDOW DETAILS TO BE INSTALLED BY SHEET METAL CONTRACTOR.

LINE WIRE, WHEN USED AS BACKING TO SUPPORT WATER-RESISTANT BUILDING PAPER OR FELT BENEATH LATH FOR STUCCO SHOULD BE INSTALLED ACCORDING TO INDUSTRY STANDARDS AND PRACTICE. NO ATTACHMENT DEVICE NOR THE WIRE BACKING SHOULD COVER OR PENETRATE FLASHING MATERIAL. PERIPHERAL FLASHING AT ALL EDGES OF WALL OPENING MUST COVER WIRE BACKING.

WINDOW FLASHING INSTALLATION 4

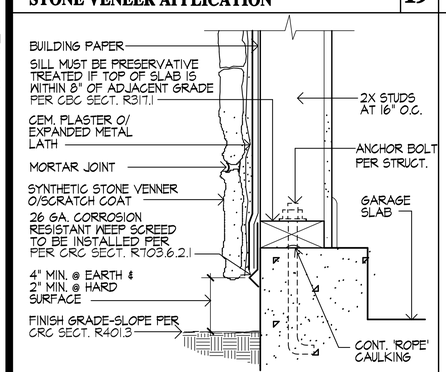

STONE VENEER APPLICATION 20

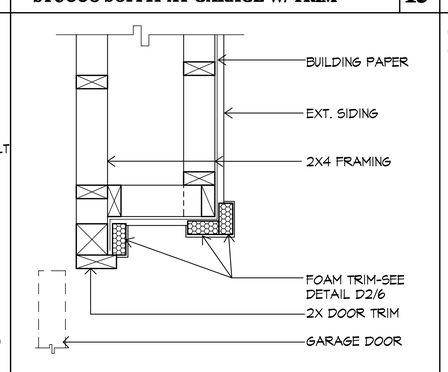

GARAGE JAMB W/TRIM 16

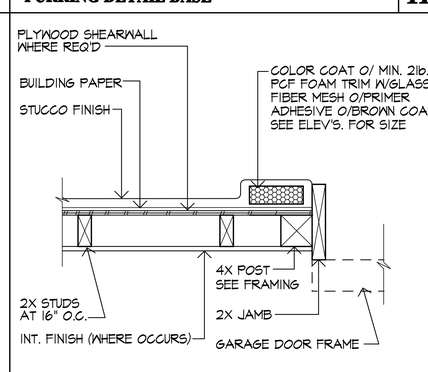

STUCCO TRIM AT GARAGE DOOR 12

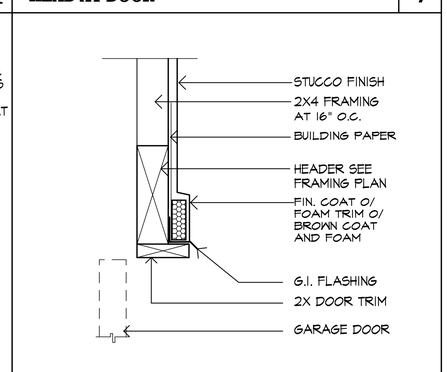

GARAGE DOOR HEAD W/ STUCCO O/ FOAM TRIM 8

PLOT TIME: 9:12 AM PATH\NAME: G:\O_KPI\2013\3036 COLONY 65 PLANS\NONPLAN\3036 DETAILS 4.DC5

KPI Inc.

KNITTER PARTNERS INTERNATIONAL, INC.
architecture & planning

1401 DOVE ST. SUITE 240
NEWPORT BEACH, CA 92660
PHONE: (949) 752-1177
FAX: (949) 752-0151
WWW.KNITTER.COM

©KNITTER PARTNERS INTERNATIONAL
ALL RIGHTS RESERVED 2013

THIS DOCUMENT IS THE PROPERTY AND COPYRIGHT OF KNITTER PARTNERS INTERNATIONAL, INC. AND SHALL NOT BE USE ON ANY OTHER WORK, BE REPRODUCED OR DISCLOSED TO OTHERS EXCEPT BY WRITTEN AUTHORIZATION FROM KNITTER PARTNERS INTERNATIONAL, INC.

NO.	DATE	REVISION

IMAGINE DEVELOPMENT L.L.C.

THE COLONY 65
LANCASTER, CALIFORNIA

LICENSED ARCHITECT
MICHAEL J. KNITTER
C10524
REN. 4-30-19
STATE OF CALIFORNIA

PROJECT INFO

JOB NUMBER	3036
PROJECT MGR.	RC
DRAWN BY	STAFF
PLOT DATE: 3-6-2018	

SHEET TITLE

DETAILS

SHEET NUMBER

D-4

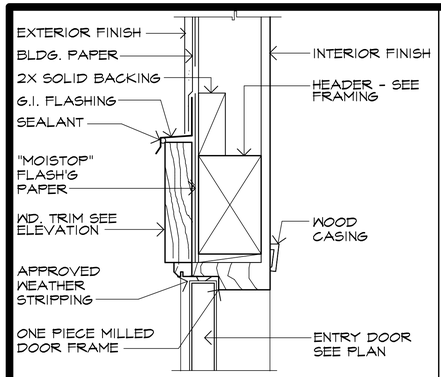

DOOR HEAD/JAMB WITH TRIM 17
2X TRIM

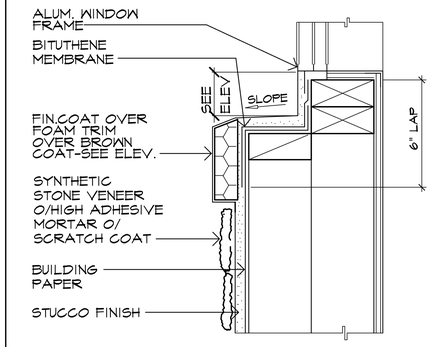

FURRED SILL AT WINDOW 13

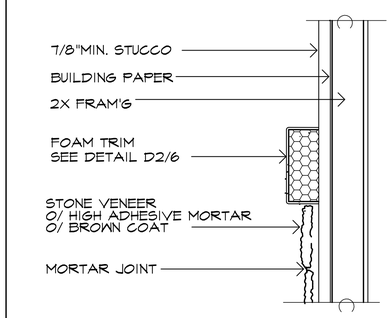

STUCCO BELLYBAND 9
ABV. STONE VENEER

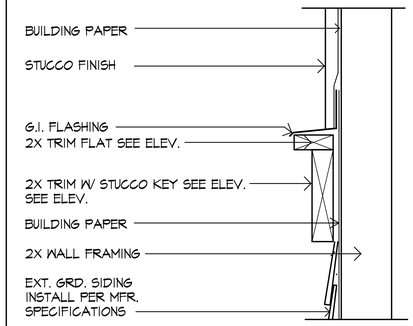

MATERIAL CHANGE AT TRIM 5

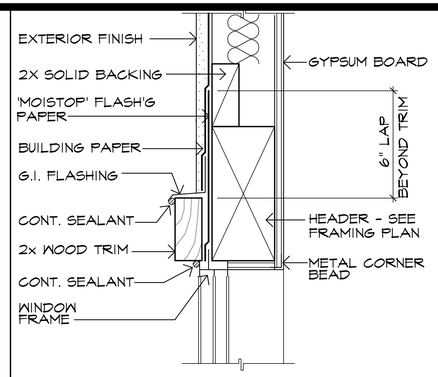

WINDOW HEAD
WITH 2x TRIM 1

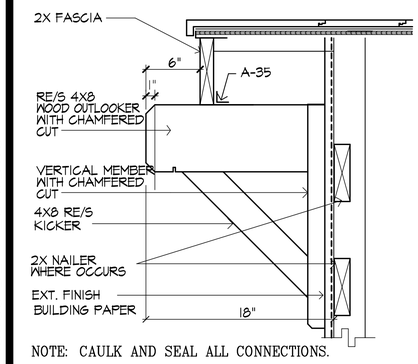

NOTE: CAULK AND SEAL ALL CONNECTIONS.

WOOD OUTLOOKER 18

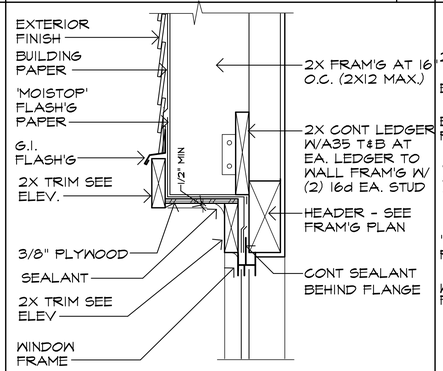

FURRED SOFFIT AT WINDOW 14

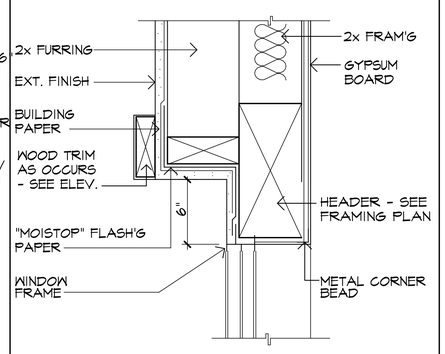

WINDOW HEAD AT FURRING 10

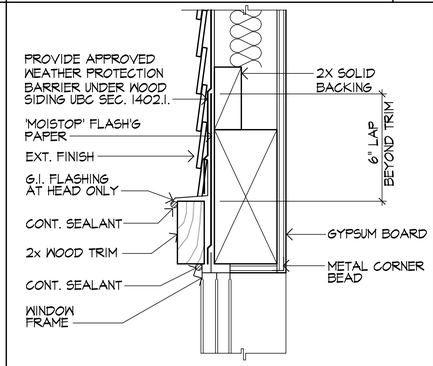

HEAD DETAIL
WITH 2x TRIM 6

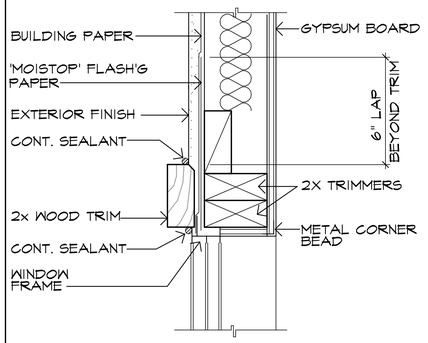

WINDOW JAMB
WITH 2x TRIM 2

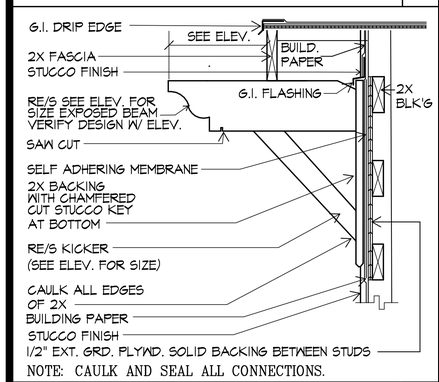

NOTE: CAULK AND SEAL ALL CONNECTIONS.

WOOD CORBEL AT ROOF 19

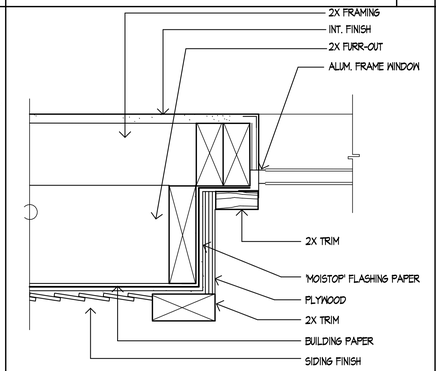

JAMB AT FURRED-OUT WALL 15

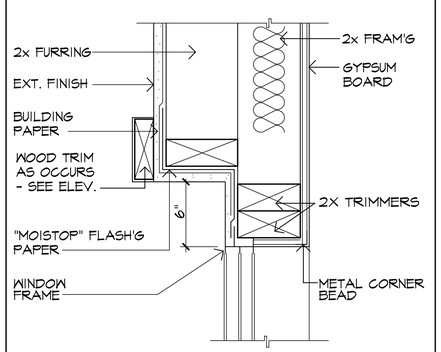

WINDOW JAMB AT FURRING 11

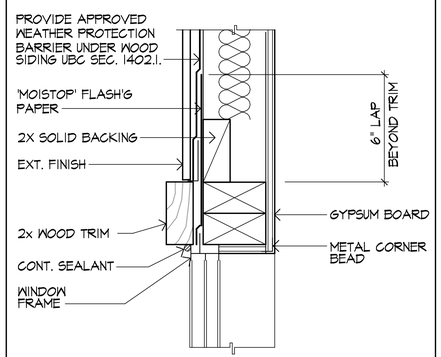

JAMB DETAIL
WITH 2x TRIM 7

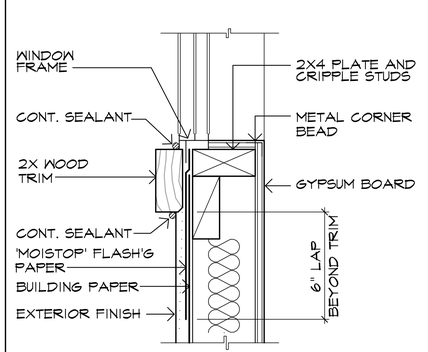

SILL DETAIL
WITH 2x TRIM 3

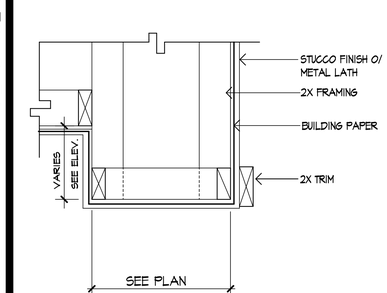

STUCCO SOFFIT W/ TRIM 20
2X TRIM

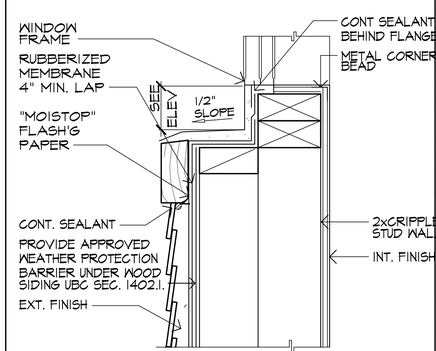

FURRED SILL AT WINDOW 16

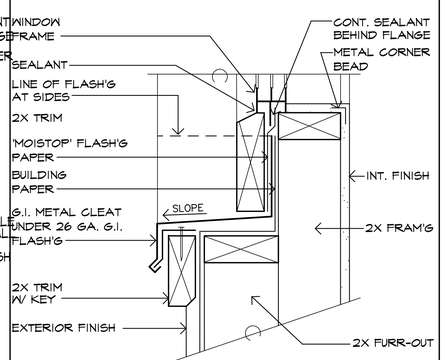

FURRED SILL AT WINDOW 12

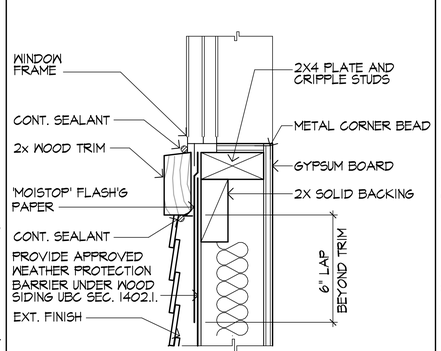

SILL DETAIL 8

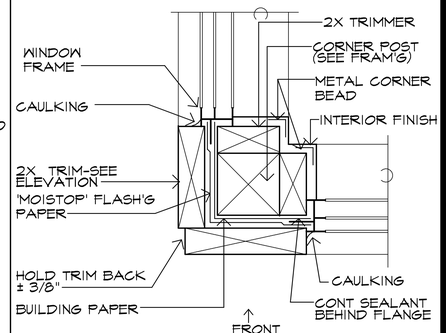

CORNER MULLION (POST) 4
WITH 2X TRIM & TRIMMERS

KPI Inc.
KNITTER PARTNERS INTERNATIONAL, INC.
architecture & planning
1401 DOVE ST. SUITE 240
NEWPORT BEACH, CA 92660
PHONE: (949) 752-1177
FAX: (949) 752-0151
WWW.KNITTER.COM

©KNITTER PARTNERS INTERNATIONAL ALL RIGHTS RESERVED 2013

THIS DOCUMENT IS THE PROPERTY AND COPYRIGHT OF KNITTER PARTNERS INTERNATIONAL, INC. AND SHALL NOT BE USE ON ANY OTHER WORK, BE REPRODUCED OR DISCLOSED TO OTHERS EXCEPT BY WRITTEN AUTHORIZATION FROM KNITTER PARTNERS INTERNATIONAL, INC.

NO.	DATE	REVISION

IMAGINE DEVELOPMENT L.L.C.

THE COLONY 65
LANCASTER, CALIFORNIA

LICENSED ARCHITECT
MICHAEL J. KNITTER
C10524
REN. 4-30-19
STATE OF CALIFORNIA

PROJECT INFO

JOB NUMBER	**3036**
PROJECT MGR.	RC
DRAWN BY	STAFF
PLOT DATE:	3-6-2018

SHEET TITLE

DETAILS

SHEET NUMBER

D5

PLOT TIME: 9:12 AM PATH\NAME: G:\O_KPI\2013\13036 COLONY 65 PLANS\NONPLAN\3036 DETAILS 5.DC5

GENERAL REQUIREMENTS

GENERAL REQUIREMENTS

1. Work performed shall comply with the following:
2. These General Requirements unless otherwise noted on plans or specifications.
3. Building Code - CBC 2016
4. All applicable local, State and Federal Codes, Ordinances, Laws, regulations and Protective Covenants governing the site of work.
5. Standard Specifications of ASTM as noted herein and as required by the Building Code.
6. All work needs to be performed by qualified and experienced contractors familiar with this type of project.
7. In case of conflict, the more stringent requirement shall govern.
8. On site verification of all dimensions and conditions shall be the responsibility of the contractor and sub-contractors. Noted dimensions take precedence over scale of drawings.
9. Engineer or architect of record is to be notified immediately by the contractor should any question arise or any discrepancy be found pertaining to the working drawings and/or specifications.
10. No deviations from these requirements and structural details shall be made without the written approval of Gouvis Engineering Consulting Group. Approval by the inspector does not constitute authority to deviate from plans or specifications.
11. The design, adequacy, and safety of erection bracing, shoring, temporary supports, etc., is the sole responsibility of the contractor, and has not been considered by the architect or engineer. The contractor is responsible for the stability of the structure prior to the application of all shear walls, roof and floor diaphragms, and finish materials. The contractor shall provide the necessary bracing to provide stability prior to the application of the aforementioned materials. Observation visits to the site by the architect or structural engineer shall not imply the assumption of any responsibility in this regard.

    The builder has requested, contracted with and is compensating Gouvis Engineering Consulting Group for the limited services of providing the minimum structural engineering drawings required, when combined with the other builders' consultants drawings, to obtain a building permit for this project. These drawings are not intended to, nor do they detail all conditions, identify all materials, or define or limit the scope of work required to complete the project. The builder has requested, accepted, and represented that he he will select all materials and manufacturers, qualify and select all installers, direct all ways and means of construction, and provide all subcontractors additional information, above and beyond these drawings, required to complete the project in conformance with all governing agencies and the work will meet or exceed accepted industry standards.
12. Special inspection per Building Code Sec.1704 is required & applies to the types of work indicated on sheet SN-1B/SN-1C (Note: Special inspectors qualification and responsibilities should comply with Building Code Section 1701 Requirements.)
13. Structural analysis for this project is done per applicable Building Code at the time of design considering standard of care.
14. Upon completion of above by the engineer & prior to start of construction, contractor is responsible to check all dimensions, coordinate with the work of other consultants & other trades to ensure compliance with his/her requirements.
15. Gouvis Engineering shall have no liability for waterproofing or moisture transmission issues, whether related to concrete slabs, footings, foundations, or otherwise. Owner and Contractor shall be entirely responsible for such issues, and will defend and indemnify Gouvis Engineering against all such claims.

DESIGN CRITERIA

1. SOILS: Allowable Bearing = 1500 psf
2. LATERAL LOADS:

Seismic Design Category:	D	Wind Speed:	110
Seismic Importance Factor (I) =	1	Wind Exposure:	C
Site Class = D			
S_S : 1.5		S_{DS} : 1	
S_1 : 0.634		S_{D1} : 0.634	

Structural Observation is required for structures greater than two stories above grade plane and assigned to Seismic Design Category "E". Contractor/Owner must contact Gouvis Engineering to schedule observations as needed basis prior to specific stage of that phase.

3. DESIGN LOADS:

Roof Load	Floor load	Deck load
Dead Load = 20 psf	Dead Load = 15 psf	Dead Load = 15 psf
Live Load = 20 psf	Live Load = 40 psf	Live Load = 60 psf
Total = 40 psf	Total = 55 psf	Total = 75 psf

4. LUMBER GRADES (U.N.O.)

    6x & 8x posts / beams / headers: DFL #1
    4x posts / beams / headers: DFL #2
    2x joists / rafters: DFL #2
    Studs: D.F.L. Stud Grade (up to 9'-0"), DFL #2 (taller than 9'-0")
    Top plates & Mud sills: DFL construction grade or better
    See structural wood note #11 for additional mud sill requirements

5. TYPICAL FLOOR/ROOF DECK/DECK SHEATHING

    23/32" APA rated Sturd-I-Floor T&G Exp I with min. span rating of 24" o.c.
    Refer to NER 108 for installation and conditions of use

    B.N.:10d common nails at 6" o.c.
    E.N.:10d common nails at 6" o.c.
    F.N.:10d common nails at 12" o.c.

    Use ring or screw shank nails and glue sheathing to framing using adhesives meeting APA specification AFG-01 or ASTM D3498. Apply glue in accordance with manufacturer's recommendations.

    As an alternate to 10d common nails, the following fastners can be used: Grabber plywood screws (ICC-ER-5280), or Simpson Strong-Tie quick drive screws (ICC-ER-1472), min 2" long @ 6" o.c. B.S., @ 6" o.c. E.S. and 12" o.c. F.S.

6. TYPICAL SLOPED/FLAT NON-ASSEMBLY ROOF SHEATHING

    15/32" APA rated sheathing Exp 1 with a min. panel index of 32/16.
    Refer to NER 108 for installation and conditions of use.

    B.N.:8d common nail at 6" o.c.
    E.N.:8d common nail at 6" o.c.
    F.N.:8d common nail at 12" o.c.

    *Note: All structural rated panels must be stamped by one of the following approved agencies, APA, PFS/TECO or Pittsburg.

SHOP DRAWINGS

1. Sufficient copies of shop drawings for any member or product designed by entity other than Gouvis Engineering Consulting Group shall be submitted to Gouvis Engineering Consulting Group prior to fabrication for review. Contractor shall submit shop drawings of reinforcement for concrete masonry walls, concrete components with compressive strength more than 2500 psi and structural steel to Gouvis Engineering Consulting Group to review and obtain approval prior to fabrication. Shop Drawings shall be original drawings prepared for the project specific information, drawn accurately to scale. Direct copies and modified reproductions of the Contract Documents will not be accepted. Allow sufficient time from the receipt of complete submittal for review and processing by Gouvis Engineering Consulting Group.
2. Review of shop drawings by Gouvis Engineering Consulting Group does not relieve the engineer responsible for the design or the contractor from compliance with Building Code.
3. Gouvis Engineering Consulting Groups review of the shop drawings consists of checking general conformance with structural drawings. Design accuracy of such product, dimensions and quantity of the product is not reviewed by Gouvis Engineering Consulting Group.

STRUCTURAL WOOD

NAILING SCHEDULE

CONNECTION	NAILING
1. JOIST TO SILL OR GIRDER, TOENAIL	3-8d
2. BRIDGING TO JOIST, TOENAIL EACH END	2-8d
3. 1" X 6" SUBFLOOR OR LESS TO EACH JOIST, FACE NAIL	2-8d
4. WIDER THAN 1" X 6" SUBFLOOR TO EACH JOIST, FACE NAIL	3-8d
5. 2" SUBFLOOR TO JOIST OR GIRDER, BLIND AND FACE NAIL	2-16d
6. SOLE PLATE TO JOIST OR BLOCKING, FACE NAIL	16d (BOX) AT 16" O.C.
SOLE PLATE TO JOIST, AT BRACED WALL PANEL	(3) 16d (BOX) PER 16"
7. TOP PLATE TO STUD, END NAIL	2-16d
8. STUD TO SOLE PLATE	4-8d, TOENAIL OR 2X SOLE: 2-16d; 3X SOLE: 2-20d (BOX)
9. DOUBLE STUDS, FACE NAIL	16d (BOX) AT 24" O.C.
10. DOUBLED TOP PLATES, FACE NAIL	16d (BOX) AT 16" O.C.
DOUBLE TOP PLATES, LAP SPLIC	8-16d
11. BLOCKING BETWEEN JOIST OR RAFTERS TO TOP PLATE, TOENAIL	3-8d
12. RIM JOIST TO TOP PLATE, TOE NAIL	8d AT 6" O.C.
13. TOP PLATES, LAPS AND INTERSECTIONS, FACE NAIL	2-16d
14. CONTINUOUS HEADER, TWO PIECES	16d AT 16" O.C. ALONG EACH EDGE
15. CEILING JOISTS TO PLATE, TOENAIL	3-8d
16. CONTINUOUS HEADER TO STUD, TOENAIL	4-8d
17. CEILING JOISTS, LAPS OVER PARTITIONS, FACE NAIL	3-16d
18. CEILING JOISTS TO PARALLEL RAFTERS, FACE NAIL	3-16d
19. RAFTER TO PLATE, TOENAIL	3-8d
20. 1" BRACE TO EACH STUD AND PLATE, FACE NAIL	2-8d
21. 1" X 8" SHEATHING OR LESS TO EACH BEARING, FACE NAIL	3-8d
22. WIDER THAN 1" X 8" SHEATHING TO EACH BEARING, FACE NAIL	3-8d
23. BUILT-UP CORNER STUDS	16d AT 24" O.C.
24. BUILT-UP GIRDER AND BEAMS	20d AT 32" O.C. AT TOP AND BOTTOM AND STAGGERED 2-20d AT ENDS AND AT EACH SPLICE
25. 2" PLANKS	2-16d AT EACH BEARING

NOTES: 1. COMMON NAILS SHALL BE USED (U.N.O.)
2. JOIST CAN BE EITHER SAWN LUMBER OR I-JOIST PER PLAN

SHEAR WALL SCHEDULE

2016 CALIFORNIA BUILDING CODE (1), (3)

SHEAR PANEL TYPE	SHEATHING (8)	EDGE NAILING (COMMON)	FIELD NAILING (COMMON) (9)	ALLOWABLE SHEAR (PLF)	SILL PLATE CONNECTION: 16d's SINKER	1/4"Ø x6" SDS SCREWS LSL & DF RIM BOARD	1/4"Ø x6" SDS SCREWS LVL RIM BOARD	FRAMING CLIPS A35's, LS50's OR LTP4's (5), (6)
1	3/8" APA rated	8 d's @ 6" O.C.	8 d's @ 12" O.C.	260 / (7) 220	@ 6" O.C.	@ 16" O.C.	@ 14" O.C.	@ 16" O.C.
2 (4) (2)	3/8" APA rated	8 d's @ 4" O.C.	8 d's @ 12" O.C.	380 / (7) 320	@ 4" O.C.	@ 12" O.C.	@ 10" O.C.	@ 12" O.C.
3 (4) (2)	3/8" APA rated	8 d's @ 3" O.C.	8 d's @ 12" O.C.	490 / (7) 410	(10) @ 3" O.C.	(10) @ 8" O.C.	(10) @ 7" O.C.	(10) @ 8" O.C.
4 (4) (2)	3/8" APA rated	8 d's @ 2" O.C.	8 d's @ 12" O.C.	640 / (7) 530	(10) @ 2" O.C.	(10) @ 6" O.C.	(10) @ 5" O.C.	(10) @ 8" O.C.
5 (4) (2)	15/32" APA rated Structural I	10 d's @ 2" O.C.	10 d's @ 12" O.C.	870	(10) 2 ROWS STAGG. @ 3" O.C.	(10) @ 5" O.C.	(10) @ 4" O.C.	(10) @ 6" O.C.

(1) SHEATHING PANEL JOINT AND SILL PLATE NAILING SHALL BE STAGGERED IN ALL CASES.
(2) PROVIDE 3" NOMINAL OR WIDER FRAMING AT ADJOINING PANEL EDGES WITH NAILS STAGGERED.
(3) STUDS ARE SPACED @ 16" O.C. MAX. UNLESS NOTED OTHERWISE ON PLAN.
(4) PERIODIC SPECIAL INSPECTION IS REQUIRED.
(5) USE CLIPS @ 6" O.C. ON SIMPSON STRONG WALL & HARDY FRAME (U.N.O.).
(6) USE SPACING PER SCHEDULE IF NUMBER OF FRAMING CLIPS ARE NOT SPECIFIED ON FRAMING PLANS.
(7) ALLOWABLE SHEAR ARE FOR STUDS SPACED @ 24" O.C. MAX.
(8) SHEATHING CONFORMS TO EITHER DOC PS 1 OR PS 2 STANDARDS.
(9) NAILING @ 6" O.C. WHEN STUDS ARE SPACED @ 24" O.C.
(10) FOR DOUBLE SIDED SHEAR PANELS:
a. USE HALF THE SPACING OF SILL PLATE FASTENERS STAGGERED FOR TYPE 3 .
b. USE ONLY 1/4"Ø x6" SDS SCREWS IN SCHEDULE AND WITH HALF THE SPACING, FOR TYPES 4 & 5 .
c. SEE SHEAR TRANSFER DETAIL ON PLAN FOR FRAMING CLIP TYPES AND SPACING, FOR TYPES 3 , 4 & 5 .

REV. 12/19/2016

MINIMUM QUALITY

1. All structural wood shall be of Douglas Fir Larch species, (19% maximum moisture content at the time of construction U.N.O.).
2. All machine bolts shall conform to ASTM A307. Holes for bolts should be drilled 1/16" larger than bolt diameter.
3. For non-shear wall applications, round washers shall be used on all bolts and should conform with ANSI/ASME B 18.22.1. Use min. 1 3/8" Ø x 7/64" thick washer for 1/2" Ø bolt, 1 3/4" Ø x 9/64" thick washer for 5/8" Ø bolt and 2 1/2" Ø x 11/64" thick washer for 1" Ø bolt. U.N.O.
4. All nails shall be sinker nails and staggered U.N.O., except as shown in Nailing Schedule.
5. Adhesive used to attach floor sheathing to framing elements shall conform with APA specification AFG-01.
6. Manufactured hardware specified on the drawings are to be Simpson Strong Tie (Unless specifically authorized in writing by Gouvis Engineering Consulting Group). Follow all manufacturer's requirements & recommendations for installation & handling of the product.
7. Do not bend the Simpson PA straps.
8. Fasteners specified on the drawings may be colored using manufacturer's brands that utilize the color coded system. Follow all code and manufacturer's requirements/recommendations for installation & handling of the products.

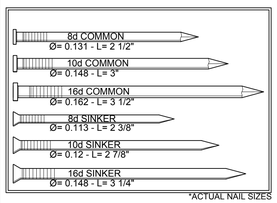

*ACTUAL NAIL SIZES

COLOR CHART FOR STRUCTURAL NAILS

TYPE OF FASTENER	SIZE & DIAMETER	COLORS
8d Cooler	2 3/8 X .113	YELLOW
8d Common	2 1/2 X .131	BLUE
16d Short	3 1/4 X .131	BLACK
10d Common	3 X 0.148	PURPLE
12d Common (16d Sinker)	3 1/4 X .148	GREEN
16d Common	3 1/2X .162	ORANGE

FRAMING

9. All framing, bracing, nailing, notching, drilling or boring shall be in accordance with Building Code unless more stringent requirements are specified or required by the local Jurisdiction.
10. Fabrication and handling of Glue-lam beams shall be per ANSI/AITC A 190.1 . Standard beams to bear legible APA-ENS or AITC grade stamp. An APA- EWS CRAN AITC Certificate of conformance for glued-laminated members should be submitted to the field inspector prior to installation and Glue-lam members shall be 24F-V4, DF/DF with standard camber on roof beams except cantilever end (U.N.O.). All cantilever ends and floor beams shall have zero camber u.n.o. All beams shall be fabricated using waterproof glue.
11. Fasteners in contact with preservative treated lumber and fire retardant treated wood shall be of hot-dipped zinc-coated galvanized steel, stainless steel, silicon bronze or copper. Exception: Plain carbon steel fasteners in sbx/dot and zinc borate preservative-treated wood in an interior, dry environment shall be permitted.
12. Stud walls perpendicular to a concrete or masonry wall shall be bolted to the concrete or masonry wall with 5/8" diameter x 8" A307 bolts at top, mid-height and bottom.
13. Structural information shown on framing plans is for the main structural elements. Non-structural elements shall be constructed per approved code requirements.
14. Conventional light framed construction requirements of chapter 23 should be followed as required.
15. Weight of the roof tile is considered to be 10 psf max. (total roof dead load of 19 psf). If roofing material exceeds this load, the framing contractor should notify Gouvis Engineering Consulting Group in writing prior to construction.
16. Top plates of all wood stud walls to consist of (2) 2x's the same width as the studs U.N.O. Top plates shall lap a minimum of 48" and be spliced with not less than 6-16d nails spaced not more than 12" o.c.
17. All shear panels shall have continuous sheathing material from one end to the other and from plate to plate as specified on the drawings. Contractor shall coordinate framing such that continuity of shear panels is assured.
18. All ledgers shall be spliced with ST22 strap, unless noted otherwise.
19. All shear transfer nailing shall be per drawings, and contractor shall provide proper notification for inspections to review the same.
20. Provide post/multiple studs at lower floor under post/multiple studs above. Each post/stud shall be fastened by Gypsum Wall Board w/ 5d cooler nails @ 7" o.c. U.N.O. on plan. Provide full width and depth compression block between floors at such locations.
21. All joist hangers shall be Simpson U hanger, all beam hangers shall be Simpson HU hangers U.N.O. on plan or detail. Follow manufacturer's recommendations for installation.
22. If a double sill plate is used at light-weight concrete flooring, then the framing contractor shall apply sill plate nailing to both sill plates, at 16" o.c. max. or as specified per schedule.
23. Building Code 2308.5.1 balloon framed walls (non-bearing) stud heights:
    - 2x4's @ 16" o.c. maximum 14'-0" height
    - 2x6's @ 16" o.c. maximum 20'-0" height
    - No multiples of 2x4"s are allowed to span more than 14'-0". Bearing walls exceeding 10'-0" must be designed case by case.
24. Headers: Use 4X4 for openings less than 16" at bearing walls without point loads. For non-bearing walls use 2x4 for openings up to 3'-0" max. Use (2)2x4 for openings up to 6'-0" max. Use 4x6 for openings up to 12'-0" max. U.N.O. (2-2x on edge can be substituted for 4x members).
25. Approved end-jointed lumber may be used interchangeably with solid sawn members of the same species and grade for buildings up to 2-story. When finger jointed lumber is marked "stud use only" or "vert use only" such lumber shall be limited to use for studs only. All finger jointed lumber should bear a certified finger jointed lumber grade stamp.
26. Wood truss manufacturer shall supply to the engineer and the building department calculations and shop drawings for approval of design loads, configuration (2 or 3 point bearing), and shear transfer, prior to fabrication. It shall be the responsibility of the manufacturer to obtain building department approval of calculations and shop drawings prior to fabrication.
27. Trusses shall be designed in accordance with the latest local Building Code for all loads imposed, including lateral loads and mechanical equipment loads.
28. All connections involving trusses shall be ICC approved and of adequate strength to resist stresses due to the loadings involved and shall be designed and specified by the truss manufacturer.
29. Total load and live load vertical deflections for roof member shall be limited to max. L/240, and L/360 U.N.O. Total load and live load vertical deflections for floor member shall be limited to max. L/360, and L/480 U.N.O.
30. Cross bridging and/or bracing shall be provided and detailed by the truss manufacturer as required to adequately brace all trusses.
31. Truss manufacturer to provide details which allow for normal deflection without imposing lateral loads on their supports (i.e., scissors trusses).
32. Truss manufacturer is responsible for:
    a. providing additional shear and drag trusses as shown on the framing plans.
    b. reviewing framing plans and structural details prior to fabrication of trusses and specifying hangers.
    c. meet the profile as indicated in the drawings.
    d. design trusses for deflection compatibility of the system to avoid hump and/or sag in roof or ceiling.
33. All trusses designed by truss manufacturer shall be designed to sustain all vertical, lateral and other pertinent loads, including bracing of top and bottom chords, in addition to any connections related to trusses. Contractor to coordinate with truss manufacturer.
34. All truss lumber shall be Douglas Fir Larch (U.N.O.). Roof truss lumber shall be either Douglas Fir Larch or Hem-Fir. (U.N.O.)
35. Each truss shall be legibly branded, marked or otherwise have permanently affixed thereto the following information located within two feet of the center of span on the face of the bottom chord:
    a. Identity of the company manufacturing the truss.
    b. The design load.
    c. The spacing of the trusses.

CEILING JOISTS

36. With dead load = 6 psf max. & live load = 10 psf max., 2x4 DF#2 ceiling joists @ 16" o.c. with 9'-6" span max. and 2x6 DF#2 ceiling joists @ 16" o.c. with 15'-0" span max. unless noted otherwise on plan. Contact Gouvis Engineering for other conditions.

STRUCTURAL STEEL

GENERAL

1. All structural steel materials and construction shall conform to the requirements specified in Building Code, Chapter 22 & Reference.

MATERIALS

2. Steel shall be primed with a rust resistance primer & should conform to ASTM A36 (fy=36 ksi) as a minimum, unless otherwise noted. All W shapes to be ASTM A992. (fy=50 ksi)
3. Steel pipe shall conform to ASTM A53, Grade B (Fy=35 ksi).
4. Round HSS tubing shall conform to ASTM A500 Grade B (Fy=42 ksi)
5. Rectangular and square HSS tubing shall conform, to ASTM A500, Grade B (Fy=46 ksi).
6. All structural welding procedures and materials shall conform to Building Code, Section 2204.1. All welding shall be by the shield metal arc welding process or the submerged arc welding process using E70XX-low hydrogen electrodes, unless otherwise noted.
7. All bolts for connections of steel members shall conform to Building Code, Section 2204.2 & ASTM A325N, unless otherwise noted. Holes for bolts should be drilled or punched & shall be 1/16" larger than bolt diameter.
8. Prefabricated steel moment frames per manufacturer. Steel moment frame manufacturer shall submit shop drawing, design calculations, and approved moment frame test report (ICC, IAMPO, or test per Appendix S of AISC SEISMIC PROVISION) to GOUVIS ENGINEERING for review.

WELDS

9. All shop welding and fabrication must be done in a shop approved by a special inspection agency which is approved by the Building Official. All field welding must be performed by a certified welder and a special inspector shall continuously inspect all structural field welding. Both shall be approved by the Building Official.

CONCRETE MASONRY

GENERAL

1. All concrete masonry materials and construction shall be in accordance with Building Code, Chapter 21.

MATERIALS

2. All materials making up finished concrete masonry construction shall conform to standards required by Building Code Sec. 2103.
3. Mortar shall be type M or S as applicable and conforming with ASTM C270 and shall be proportioned per Article 2.1 & 2.6A of Specification for Masonry Structures (TMS 602-13/ACI 530.1-13/ASCE 6-13).
4. Grout shall comply with Article 2.2 & 2.6B of TMS 602-13/ACI 530.1-13/ASCE 6-13 and shall attain a minimum compression strength at 28 days of 2000 psi or the required compression, f'm, whichever is greater. The compressive strength of grout shall be determined in accordance with ASTM C-1019.
5. Concrete masonry units shall conform to ASTM C90 for load bearing concrete masonry units. Concrete brick shall conform to ASTM C55, Specifications for Concrete Building Brick.
6. Grade N concrete bricks are for use as architectural veneer and facing, limited to in exterior walls.
7. Grade S concrete bricks are for general use where moderate strength and resistance to frost action and moisture penetration is required.

STRENGTH

8. The specified compressive strength of masonry, f'm, shall be 2000 psi, unless noted otherwise.

SPECIAL INSPECTION

9. Special inspection for concrete masonry construction shall be carried out in accordance with Building Code Section 1704 and requirements in Special Inspection tables on sheet SN-1. Masonry compressive strength, f'm shall be verified by Unit strength method or Prism test method prior to and during construction as described in Building Code, Section 2105.

REINFORCED CONCRETE

GENERAL

1. All reinforced concrete materials and construction shall conform to Building Code, chapter 19.

MATERIALS

2. Cement shall conform to Section 1903 of Building Code and shall correspond to that on which the selection of concrete proportions were based.
3. Concrete aggregates shall conform to Building Code Section 1903.
4. Portland cement shall be Type I or II conforming to ASTM C150. For concrete in contact with soil containing sulfate SO_4 ≥ 0.1% by weight use Type II cement, containing sulfate SO_4 ≥ 0.2% by weight useType V cement. Weight percentage of SO_4 shall be per soils report. Refer to Section 1904 of the Building Code for special exposure conditions as required by soils engineer & see corrosion engineer's recommendations for concrete exposed to corrosive elements.
5. Reinforcing steel shall conform to ASTM A615. Grade 40 for sizes #3 and Grade 60 for sizes #4 and larger.
6. Dowels shall be equal in size and spacing.

STRENGTH

7. The (28 days) concrete compressive strength, f'c, shall be min 2500 psi U.N.O.
8. The (28 days) concrete compressive strength, f'c, for concrete in contact with soil with weight percentage of sulfate (SO_4) ≥ 0.10 shall be 4000 psi, and with weight percentage of sulfate (SO_4) ≥ 0.20 shall be 4500 psi. Special inspection is not required.
9. Special inspection is required for concrete with f'c > 2500 psi unless the use of concrete with f'c > 2500 psi is solely for item #8 above.
10. All reinforcing, dowels, holdowns, and other inserts shall be secured in position and approved by the local building official prior to the pouring of any concrete.
11. Min. concrete cover for reinforcing:
    a- Concrete, placed against earth not formed - 3"
    b- Concrete formed or troweled - 2"
    c- Walls and curbs - 1 1/2"
    d- Slab on grade - at center

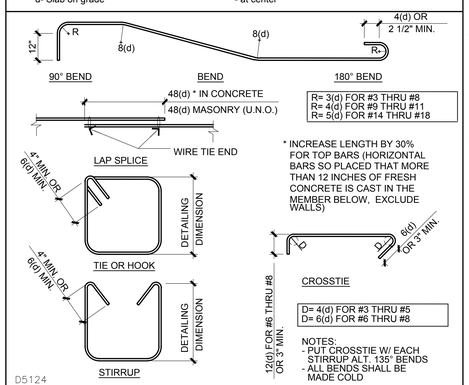

® TYP. REINFORCING DETAILS

DEFERRED APPROVAL:

1. Elements of structure that are marked "by others" shall be excluded from this work permit.
2. General contractor shall first submit separate drawings for the above elements to the EOR for their review and if approved, then submit to the building officials for their review and approval.
3. City approval shall be obtained prior to installation of element subjected to deferred approval.

FOUNDATION

1. All continuous footings to have 5/8"dia. x min. 12" anchor bolts, min. 7" embedment into concrete footing at 72" o.c. unless noted otherwise on plans. One anchor bolt should be located max. 12" away and min. 4 1/2" from the end of the sill plates. min. (2) A.Bs. per sill plate/shear panel. Sill plate under shear walls of up to 4'-0" in length must be continuous. See note 2 for sill plate fasteners at interior non-shear walls.
    1a. Anchor bolts at shear walls shall be installed with plate washers of min. 3" sq. x 0.229" thick between sill plate and nut. Edge(s) of plate washers shall be 1/2" max. from inside face of shear panel(s) per conditions shown below.
    1b. The hole in the plate washer is permitted to be diagonally slotted with a width of up to 3/16 inch larger than the bolt diameter and a slot length not to exeed 1 3/4 inches, provided a standard cut washer (5/8" Nominal size : 11/16" ID,1 3/4" OD , 9/64" thick) is placed between the plate washer and the nut.

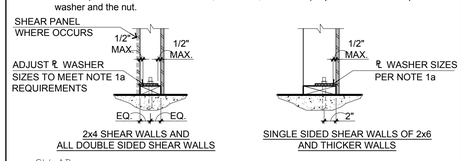

SW-AB

SW ANCHOR BOLTS AND PLATE WASHER ARRANGEMENT

2. For interior non-shear walls use Simpson PHNW series 0.145Ø pins with a penetration of 1 1/4" into slab at 16" O.C. to be installed in accordance with ICC ESR-2138. Actual slab thickness to be minimum 4". All interior shear walls to have A.Bs. per foundation plan.
3. All holdowns and post anchors to be installed according to most current Simpson Strong Tie specifications and requirements of ICC-ER reports & shall be tied in place prior to foundation inspection. Dimensions are not furnished to Simpson holdowns. It is the responsibility of the contractor's superintendent, the framing contractor and the concrete contractor to locate these anchors in the exact location. Refer to details for proper installation.
4. Min. concrete width to be 8" for receiving PA, HPA & STHD's. Verify locations of holdowns and anchor bolts with rough framing to assure accurate installation.
5. Provide #3 X 24" dowel at 24" o.c. and 12" from the corner at all concrete stoops and porches.
6. Provide min. (1) #4 reinforcing for electrical ground, location to be verified with the electrical contractor.
7. Verify min. foundation depth, width, reinforcing steel and additional expansive soil requirements with valid soils report and if more stringent, they shall supersede the above minimum requirements. See note #7 under reinforced concrete for concrete strength.
8. Admixtures in concrete mix. containing calcium chlorides shall not be used.
9. Footings shall be examined and certified in writing by the project soil/geology engineer prior to inspection and placement of concrete.
10. Concrete shall be to the strength and slump as specified per structural design, and consist of Portland cement ASTM C-150 Type V per soils engineer's recommendations and Building Code section 1904.3 (ACI 318 section 4.3) when exposed to sulfate containing solutions. Aggregates shall be per ASTM C-33. Water to be clean and potable.
11. Placement shall be in one continuous operation unless otherwise specified. Slab surface shall be cured with 'Hunts' compound or equal or cured with other methods in accordance with good construction practice at contractor's option.
12. Contractor shall dampen slab underlayment of sand/membrane just prior to concrete placement to assist uniform concrete curing. Slabs must not be poured during or immediately after rainstorms. The specified sand over visqueen should not be saturated at the time of the concrete pour. Any free water trapped in the sand layer must be removed prior to the concrete pour.
13. The bottoms of footing excavations shall be level, clean and free of loose material or water when concrete is placed. Over excavation shall be filled with concrete or properly compacted fill that has been tested and approved by the soils engineer. Backfill shall not be placed until supporting foundations, walls and slab have attained sufficient strength to support lateral soil pressure.
14. Concrete placement shall be monolithic in one continuous operation uniformly placed and must be vibrated and well consolidated unless shown otherwise on plans. Dual pour is defined by ACI as to when 1st. & 2nd. pour can not be vibrated together.
15. Floor slab shall be poured level to 1/8" in 10'.
16. Requirements for pre-saturation of subgrade soils and daylight setback of exterior footings from any descending slope shall comply with soil report recommendations.
17. Finish grade around the perimeter of slab shall be constructed such that rain and irrigation water is drained away from the slab.
18. All site and pad preparation, such as but not limited to shading, compacting of the fill, pre-saturation, and concrete slab base preparation, shall be performed in accordance with the soil engineer's recommendation and soils report.
19. Foundation drawings prepared by Gouvis Engineering Consulting Group reflect the structural requirements. Refer to architectural plans for dimensions, depressions, slope, shelves, patios, stoops and porches not shown in foundation drawings. Accuracy of the dimensions and final fit of the building shall be reviewed by the architect and the contractor prior to construction.
20. Waiting period for concrete slabs-on-grade prior to start of construction is as follows:
    a. Do not walk on slab until 24 hours after concrete has been poured.
    b. Begin wall framing 4-5 days after concrete poured.
    c. Begin roof/floor framing 7-10 days after concrete poured.
    d. Do not load roof prior to 14 days after concrete poured.
21. No pipes or conduits shall extend under isolated column footing or under continuous wall footings unless specifically detailed or approved by the architect, structural engineer and the building official.
22. The contractor shall arrange for observation of the work by the soils engineer. The following are requirements of the soils engineer:
    a. All footing excavations shall be inspected and certified in compliance with the soils report by the soil engineer prior to placing of concrete or steel.
    b. Soil conditions, including compacting and moisture content, shall be inspected and certified to be in compliance with the soil report by the soils engineer prior to placing of concrete or steel.
    c. A certificate of compliance shall be submitted to the building official prior to his foundation inspection and to the architect and structural engineer.
23. Prior to the contractor requesting a Building Department foundation inspection, the soil engineer shall advise the building official in writing that:
    a. The building pad was prepared in accordance with the soil report.
    b. The utility trenches have been properly backfilled and compacted
    c. The foundation excavations, the soils expansive characteristics and bearing capacity conform to the soils report.

MISCELLANEOUS

1. Grout under base plates shall be non-shrink type and shall have compressive strength equal to or greater than the concrete or masonry supporting it.
2. All grade beams shall be poured monolithically for their entire length.
3. All reinforcing to be accurately and securely located prior to pouring concrete or grouting masonry.
4. All horizontal reinforcement to have matching dowels at corners of walls. All vertical reinforcement to have matching dowels to footing, unless otherwise noted.
5. SHEET ROCK ON FRAMING
    Stacked sheet rock loading shall be limited to the following quantities in any one room:
    5/8" : 16 individual 4x10 sheets (8 pairs of sheets)
    1/2" : 20 individual 4x10 sheets (10 pairs of sheets)
    The shoring of the floor supporting stacked sheet rock is required if the number of sheet rock exceeds the quantities listed above.
6. Automatic sprinkler system specification & details by others
7. The contractor is responsible for taking measures to mitigate the effects of building shrinkage in structures consisting of 3 or more stories of wood framed construction. As an alternate, use MC-15 studs for top plates, sole plates and conventional joists (No I-Joist):
    The lower 3 levels of 5 story bldgs.
    The lower 2 levels of 4 story bldgs.
    The lower first level of 3 story bldgs.

SHEET INDEX

SN-1 - General Notes & Requirements.
SN-1B - Special Inspections.
SN-2 - Structural Details & Notes.
SN-3 - Structural Details & Notes.
S-1.1 - Foundation Plan 1
S-1.2 - Framing Plan 1A & 1B
S-1.3 - Partial Framing Plan 1C & 1D
S-2.1 - Foundation Plan 2
S-2.2 - Framing Plan 2A & 2B
S-2.3 - Partial Framing Plan 2C; 2D & Opt.
S-3.1 - Foundation Plan 3
S-3.2 - Framing Plan 3A
S-3.3 - Partial Framing Plan 3B
S-3.4 - Partial Framing Plan 3C & 3D
SD-1 - Structural Foundation Details
SD-2 - Structural Details & Notes.
SD-3 - Structural Details.
SD-4 - Structural Details.

GOUVIS engineering
consulting group, inc.
4400 Campus Drive
Newport Beach
CA 92660

Newport Beach
tel 949.752.1612
fax 949.752.5321

Palm Springs
tel 760.323.5090

REGISTERED PROFESSIONAL ENGINEER MIKE HOUSHMAND No. C042283 Exp. 3/31/20 CIVIL STATE OF CALIFORNIA

DATE SIGNED: 4/23/18

RESTRICTIVE NOTICE

THESE DESIGNS, DRAWINGS, AND SPECIFICATIONS ARE THE EXCLUSIVE PROPERTY OF GOUVIS ENGINEERING CONSULTING GROUP, AND ALL INFORMATION SHOWN IS CONFIDENTIAL TO ALL RECIPIENTS AND NO PART OF THESE DRAWINGS CAN BE COPIED, TRANSFERRED, OR REPRODUCED, NOR CAN ANY STRUCTURES BE BUILT FROM THEM WITHOUT WRITTEN CONSENT OF GOUVIS ENGINEERING CONSULTING GROUP

COPYRIGHT GOUVIS ENGINEERING CONSULTING GROUP 2008 ALL RIGHTS RESERVED

PROJECT:
The Colony 65

NOT FOR BID OR CONSTRUCTION

DEVELOPER:

ARCHITECT:
KPI

LOCATION:
Lancaster, Los Angeles, CA

REVISIONS

NO.	DATE	DESCRIPTION

SHEET NAME:
GENERAL NOTES & REQUIREMENTS

PROJECT NUMBER:
64797

ENGINEER: GE
DRAFTER: GE

ISSUED DATE:	PLOT DATE:
03/19/2018	04/23/2018

SHEET NUMBER:
SN-1

SPECIAL INSPECTIONS

SPECIAL INSPECTIONS AND VERIFICATIONS BY A SPECIAL INSPECTOR ARE REQUIRED FOR CONCRETE CONSTRUCTION AND SPECIFIED IN THE FOLLOWING TABLE

EXCEPTION: CONCRETE FOOTINGS SUPPORTING WALLS OF LIGHT-FRAME WOOD BUILDING OF 3-STORIES OR LESS AND THE STRUCTURAL DESIGN OF FOOTINGS IS BASED ON A SPECIFIED COMPRESSIVE STRENGTH f'c NO GREATER THAN 2500 psi.

SPECIAL INSPECTION TABLE FOR CONCRETE CONSTRUCTION

TYPE	CONTINUOUS SPECIAL INSPECTION	PERIODIC SPECIAL INSPECTION	Reference Standard	IBC Reference
1. Inspect reinforcement, including prestressing tendons, and verify placement	—	✓	ACI 318 Ch. 20.25.2,25.3, 26.5.1-26.5.3	1908.4
2. Reinforcing bar welding:	—		AWS D1.4 ACI 318: 26.5.4	—
a. Verify weldability of reinforcing bars other than ASTM A 706;		✓		
b. Inspect single-pass fillet welds, maximum 5/16"; and		✓		
c. Inspect all other welds	✓			
3. Inspect anchors post-installed in concrete.	—	✓	ACI 318: 17.8.2	—
4. Inspect anchors post-installed in hardened concrete members.			ACI 318: 17.8.2,4	—
a. Adhesive anchors installed in horizontally or upwardly inclined orientations to resist sustained tension loads.	✓			
b. Mechanical anchors and adhesive anchors not defined in 4.a.		✓	ACI 318: 17.8.2	
5. Verify use of required design mix.	—	✓	ACI 318: Ch 19, 26.4.3, 26.4.4	1904.1,1904.2, 1908.2, 1908.3
6. Prior to concrete placement, fabricate specimens for strength tests, and determine the temperature of the concrete.	✓	—	ASTM C 172 ASTM C 31 ACI 318: 26.4.5, 26.12	1908.10
7. Inspect concrete and shotcrete placement for proper application techniques.	✓	—	ACI 318: 26.4.5	1908.6, 1908.7, 1908.8
8. Verify maintenance of specified curing temperature and techniques.	—	✓	ACI 318: 26.4.7-26.4.9	1908.9
9. Inspect prestressed concrete for:			ACI 318: 26.9.2.1 ACI 318: 26.9.2.3	—
a. Application of prestressing forces; and	✓	—		
b. Grouting of bonded prestressing tendons.	✓	—		
10. Inspect erection of precast concrete members.	—	✓	ACI 318: 26.8	—
11. Verify in-situ concrete strength, prior to stressing of tendons in post-tensioned concrete and prior to removal of shores and forms from beams and structural slabs.	—	✓	ACI 318: 26.10.2	—
12. Inspect formwork for shape, location and dimensions of the concrete member being formed.		✓	ACI 318: 26.10.1(b)	—

SPECIAL INSPECTION:

1. In addition to the regular inspection the following items will also require special inspection in accordance with Sec.1704, unless exempted by the exceptions of Sec.1704.2, of the Building Code
2. Soils compliance prior to the foundation inspection, post-tensioned foundation, high strength steel and concrete.
3. All inspections and tests shall be performed by a qualified testing agency retained by the owner.
4. The special inspector shall be qualified and approved by the building department and acceptable to the architect.
5. The special inspector shall observe work assigned for conformance to the approved design drawings and specifications.
6. The special inspector shall furnish an inspection report to the building department, engineer and architect of record. Copies of the report shall be available at the job site at all times.
7. Final reports for all inspections and testing must be provided by the special inspector. Final reports shall document completion of all inspections and correction of all noted discrepencies.
8. The duties of the special inspector shall be in conformance with the requirements of section 1704 of the latest edition of the CBC.
9. Contractor shall be responsible for all expenses due to any premature notification of inspection which results in additional site visits.
10. Failure of notification by the contractor for inspection on a timely basis may result in complete removal and replacement of all work performed at contractors expense.
11. Site visits by the structural engineer do not constitute an inspection.
12. For special inspection of wood diaphragm and shear walls, contact Gouvis Engineering for schedule. Special inspection is required for the following items:

SPECIAL INSPECTION BY A SPECIAL INSPECTOR FOR EXISTING SITE SOIL CONDITIONS, FILL PLACEMENT & LOAD BEARING REQUIREMENTS SHALL BE PERFORMED PER THE FOLLOWING TABLE.

Exception: Special inspection for existing site soil condtions per table below is not required if allowable soil bearing pressure used for design is ≤ 1500 psf, soils report is not required by building offical, and there is no controlled fill placement on existing building site

SPECIAL INSPECTION TABLE FOR EXISTING SITE SOIL CONDITIONS

TYPE	Not Applicable	Continuous Special Inspection	Periodic Special Inspection
1. Verify materials below footings are adequate to achieve the design bearing capacity per soils report.			✓
2. Verify excavations are extended to proper depth & have reached proper material per soils report.			✓
3. Perform classification & testing of compacted fill materials per soils report.			✓
4. Verify use of proper materials, densities & lift thicknesses during placement & compaction of compacted fill per soils report. Exception: Special inspection is not required during placement of controlled fill having a total depth of 12 inches or less.		✓	
5. Prior to placement of compacted fill, inspect subgrade & verify that site has been prepared properly per soils report.			✓

SPECIAL INSPECTION BY A SPECIAL INSPECTOR FOR THE CONSTRUCTION OF HORIZONTAL WOOD DIAPHRAGMS, WOOD SHEAR WALLS & MANUFACTURED SHEAR WALLS ARE REQUIRED & SPECIFIED IN THE FOLLOWING TABLE:

SPECIAL INSPECTION TABLE FOR WOOD * DIAPHRAGM & SHEAR WALLS

	INSPECTION TASK	NOT APPLICABLE	FREQUENCY OF INSPECTION		REFERENCE FOR CRITERIA
			Continuous	Periodically	CBC/IBC SECTION
Horizontal wood diaphragms with edge nail spacing equal to or closer than 4" o.c.	Sheathing types, grade thickness, span rating, and nail types, nail sizes & spacing.			✓	Sec. 1705.12.2
Wood shear walls with edge nail spacing equal to or closer than 4" o.c.	Sheathing types, grade thickness, wall nail types, nailing sizes and spacing.			✓	Sec. 1705.12.2
	Sill nail types, size and spacing.			✓	
	Anchor bolt sizes & spacing.			✓	
	Holdown types & their connections to shear walls & foundation/framing			✓	
	Wall end post sizes.			✓	
	Shear transfer connector types & spacing. Drag strut connections to shear walls.			✓	
Manufactured shear walls, Hardy panels, Simpson steel & Wood Strong walls.	Panel types, nailing, bolting, Anchoring, wall top plate screw types, sizes & spacing, holddown & drag strut connections to walls/panels.			✓	Sec. 1704 Sec. 1705.12.2 Sec. 1705.12.3

* Contact Gouvis Engineering to schedule A Special Inspection.

GOUVIS engineering consulting group, inc.

4400 Campus Drive
Newport Beach
CA 92660

Newport Beach
tel 949.752.1612
fax 949.752.5321

Palm Springs
tel 760.323.5090

REGISTERED PROFESSIONAL ENGINEER MIKE HOUSHMAND No. C042283 Exp. 3/31/20 CIVIL STATE OF CALIFORNIA

DATE SIGNED: 4/23/18

RESTRICTIVE NOTICE

THESE DESIGNS, DRAWINGS, AND SPECIFICATIONS ARE THE EXCLUSIVE PROPERTY OF GOUVIS ENGINEERING CONSULTING GROUP, AND ALL INFORMATION SHOWN IS CONFIDENTIAL TO ALL RECIPIENTS AND NO PART OF THESE DRAWINGS CAN BE COPIED, TRANSFERRED, OR REPRODUCED, NOR CAN ANY STRUCTURES BE BUILT FROM THEM WITHOUT WRITTEN CONSENT OF GOUVIS ENGINEERING CONSULTING GROUP

COPYRIGHT GOUVIS ENGINEERING CONSULTING GROUP 2008 ALL RIGHTS RESERVED

PROJECT:
The Colony
65

NOT FOR BID OR CONSTRUCTION

DEVELOPER:

ARCHITECT:
KPI

LOCATION:
Lancaster,
Los Angeles,
CA

REVISIONS

NO.	DATE	DESCRIPTION

SHEET NAME:
SPECIAL INSPECTIONS

PROJECT NUMBER:
64797

ENGINEER: GE
DRAFTER: GE

ISSUED DATE:	PLOT DATE:
03/19/2018	04/23/2018

SHEET NUMBER:
SN-1A

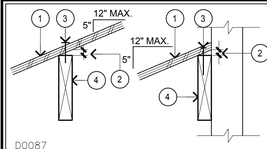

1. ROOF SHEATHING
2. 3/8" MAX. NAIL EXPOSURE @ GAP.
3. INCREASE NAILING TO 8d'S @ 3" O.C. ON NON-BEVELED MEMBER.
4. 2X BLK'G., LEDGER, R/R. OR TRUSS TOP CHORD UNDER ROOF SHEATHING WHEN NOT BEVELED ON TOP AS REQ'D.

SHEAR TRANSFER 13

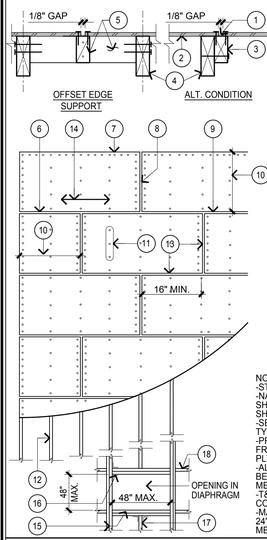

1. PANEL JOINT.
2. ROOF OR FLOOR SHEATHING.
3. 2X4 W/ NAILS TO BE MATCHED W/ EDGE NAILING.
4. ROOF OR FLOOR FRAMING MEMBER.
5. 2X4 BLK'G 6'-0" LONG MAX W/ (2) 16d COMMON NAILS @ EA. END.
6. PANEL EDGE WHERE 2X FLAT BLKG. IS NEEDED @ BLOCKED DIAPHRAGM.
7. DIAPHRAGM BOUNDARY & B.N. PER PLAN.
8. DISCONTINUOUS PANEL EDGE, EDGE NAILING PER PLAN.
9. CONT. PANEL EDGE W/ BLKG. (IF BLOCKED DIAPHRAGM), EDGE NAILING PER PLAN.
10. 24" MIN. UNLESS FULLY BLOCKED @ ALL EDGES.
11. FIELD NAILING PER PLAN.
12. FRAMING MEMBERS.
13. 1/8" GAP U.N.O.
14. DIRECTION OF FACE GRAIN PERPENDICULAR TO SUPPORT.
15. BLOCK OUT EDGES OF THE OPENING W/ DBL. STRUCT'L. MEMBERS/BEAM (U.N.O.) AND PROVIDE B.N. @ ALL EDGES. PROVIDE SINGLE BLOCKING W/ E.N. WHEN OPENING < 24"x24", AND STRAPS PER NOTE 18 DO NOT APPLY.
16. TYP. APPROVED HANGERS USE (3) 16d TOE NAILS IF LENGTH OF TAIL JOIST < 6'-0".
17. TAIL JOIST/TRUSS PER PLAN.
18. TYP. 2-BAYS OF BLKG. USE CS16 OVER BLK'G AND NAIL @ 2 1/16" O.C. U.N.O. ON FRAMING PLAN.

NOTES:
-STAGGERED JOINTS AS SHOWN
-NAILS SHALL BE DRIVEN TIGHT BUT SHALL NOT FRACTURE SURFACE OF SHEATHING.
-SEE GENERAL NOTES FOR PLYWOOD TYPE, THICKNESS, SPACING, & NAIL SIZE.
-PROVIDE MIN. 3/8" EDGE DISTANCE @ FRAMING MEMBER & 5/16" TO EDGE OF PLYWOOD DIAPHRAGM.
-ALL DIAPHRAGM BOUNDARIES SHOULD BE FULLY SUPPORTED BY FRAMING MEMBERS W/ BOUNDARY NAILING
-T&G EDGE TO BE LOCATED OVER CONTINUOUS PANEL JOINT.
-MAX. UNSUPPORTED SHEATHING TO BE 24". PROVIDE ADEQUATE FRAMING MEMBERS TO LIMIT SPAN.

SHEATHING LAYOUT 16

D0005-101122

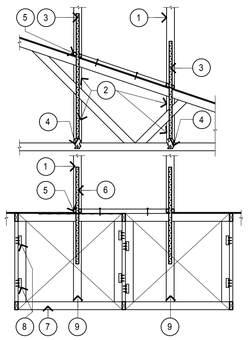

NOTE:
- FULLY NAIL CS16's W/10d's SINKER NAILS.

1. CHIMNEY STACK ON ROOF.
2. PROVIDE SOLID VERTICAL BLOCKS UNDER CORNERS OF CHIMNEY BETWEEN TRUSS CHORDS TO RECEIVE STRAPS @ CONDITION W/ ROOF TRUSSES DIRECTLY UNDER STACK.
3. SIMPSON CS16 STRAP W/ 16" MIN. LAP ON CORNER STUDS & CONTINUOUS JUST ABOVE A35 CLIP @ BOTTOM TRUSS.
4. SIMPSON LTP4 EA. SIDE TO BOTTOM CHORD OF TRUSS.
5. SLOT CUT ROOF SHEATHING AT STRAPS.
6. CS16 EA. CORNER W/ MIN. 16" LAP ON CORNER STUD AND FILLER BLOCK BELOW @ CONDITION WHERE TRUSSES ARE OFFSET FROM STACK CORNERS.
7. ADD SHEAR PANEL BLK'S W/ 1/2" SHT'G & 10d's @ 4" O.C. ALL AROUND.
8. (2) A35's EA. SIDE OF PANEL BLK'S TO TRUSS. (PROVIDE BLK'S @ WEB IF NECESSARY).
9. ADD VERT. 2x FILLER BLOCK W/ E.N. TO RECEIVE STRAPS.

INTERIOR CHIMNEY TIE DOWN 9

D0300

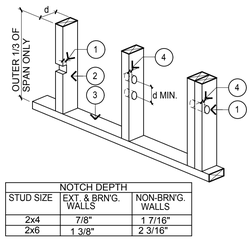

1. NOTCH DEPTH & BORED HOLE SEE TABLE BELOW.
2. STUD
3. SILL PLATE
4. HOLE EDGE DISTANCE 5/8" MIN.

NOTE:
BORED HOLES NOT PERMITTED IN MORE THAN TWO CONSECUTIVE DOUBLE STUDS

NOTCH DEPTH		
STUD SIZE	EXT. & BRN'G. WALLS	NON-BRN'G. WALLS
2x4	7/8"	1 7/16"
2x6	1 3/8"	2 3/16"

BORED HOLES		
STUD SIZE	EXT. & BRN'G. WALLS	NON-BRN'G. WALLS
2x4	1 3/8"	2 1/8"
2x6	2 3/16"	3.5/16"
2-2x4	2 1/8"	2 1/8"
2-2x6	3.5/16"	3.5/16"

D0007N1

STUD NOTCHING/BORING LIMITS 10

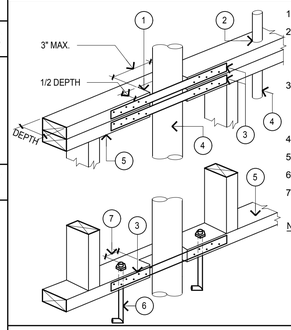

1. NOTCH IN PLATE.
2. 1 3/4" MAX. IF BORED HOLE EXCEED 1 3/4" IN 2x4 TOP TOP PLATE. STRAP EA. SIDE OF PLATE W/ ITEM #3 BELOW. PLATE OR 2 3/4" IN 2x6
3. SIMPSON RPS METAL STRAP, TYPICAL @ EACH PLATE CUT W/ (6) 16d's @ EACH SIDE. U.N.O. ON PLANS PER DETAIL 9/SD-2.
4. PIPE WHERE OCCURS.
5. TOP PLATES/SILL PLATES
6. ANCHOR BOLTS PER PLANS
7. LOCATE ANCHOR BOLT 5" MIN. 9" MAX. AWAY FROM NOTCH OR END OF PLATE

NOTES:
- IF NOTCH OR HOLE EXCEEDS 50% OF TOP PLATE WIDTH, STRAP BOTH SIDES OF PLATES.
- FOR PIPING THRU PLATE & SILL PLATES OF SHEAR WALLS, CONTACT GOUVIS ENGINEERING.

PIPING THRU PLATE FRAM'G-NON SW 11

D0006-110123

TJI SIZE	HOLE SIZE									
	UP TO 3"		4"		6 1/2"		8 7/8"		11"	
	a	b	a	b	a	b	a	b	a	b
	MIN. DIST. FROM EDGE OF HOLE TO EDGE OF SUPPORT									
11 7/8" 210	1'-0"	1'-0"	1'-0"	2'-0"	2'-6"	5'-0"	5'-6"	6'-6"	N.A.	N.A.
11 7/8" 230	1'-0"	1'-0"	1'-0"	2'-0"	3'-0"	5'-6"	6'-0"	7'-0"	N.A.	N.A.
14" 230	1'-0"	1'-0"	1'-0"	1'-0"	1'-6"	4'-0"	3'-6"	7'-0"	6'-6"	9'-0"
14" 360	1'-0"	1'-0"	1'-0"	1'-0"	2'-6"	5'-6"	5'-6"	8'-0"	8'-0"	9'-6"

NOTES:
- FOR OTHER HOLE SIZES & JOIST TYPE, SEE MANUFACTURER SPEC.
-DO NOT CUT HOLES LARGER THAN 1 1/2" IN CANTILEVER PORTION OF THE JOIST.
- A 1 1/2" HOLE CAN BE CUT ANYWHERE IN THE WEB. EXCEPT WITHIN 6" AWAY FROM SUPPORT.
- REFER TO MANUFACTURERS GUIDE-LINES IN I-JOIST CATALOG FOR MORE INFO.
- NO FIELD CUT WITHIN 6" AWAY FROM FACE OF SUPPORT.

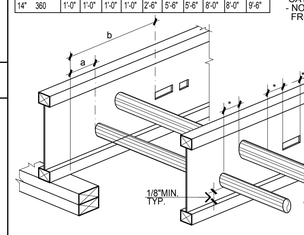

* TYPICAL MIN. DISTANCE BTWN. HOLES TO BE 2X THE LARGER HOLE.

NOTCH & HOLES IN I-JOIST

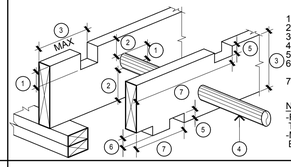

1. 1/3 OF JOIST DEPTH MAX.
2. 2" CLEAR TO EDGE OF JOIST.
3. JOIST DEPTH.
4. PIPE OR CONDUIT.
5. 1/6 OF JOIST DEPTH MAX.
6. 1/4 OF JOIST DEPTH MAX. AT SUPPORT END.
7. 1/3 OF JOIST SPAN MAX.

NOTES:
-FOR SOLID SAWN JOISTS, NOTCHED TO BE @ OUTER 1/3 SPAN ONLY.
-MAINTAIN MIN. 6" SPACING BETWEEN NOTCHES/BORED HOLES.

NOTCH & HOLES IN CONV. JST 12

D0001-130326

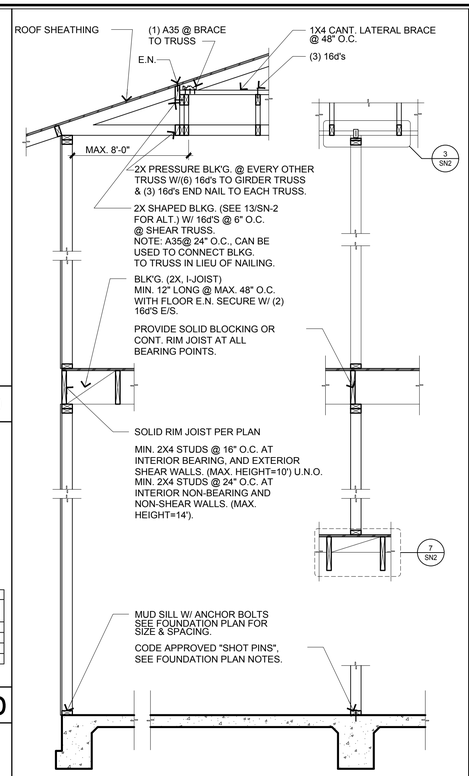

TYP. FRAMING CROSS SECTION 6

1. 2X STUDS
2. SILL PLATE
3. S.P.N. PER PLAN
4. 2X JOISTS OR "I"-JOIST
5. 2X4 @ 24" O.C. W/ (1) LTP4 TO EACH FLOOR MEMBER
6. MIN. 2X6 SOLID BLK'G. W/ (2) 16d NAILS EA. SIDE UNDER PERPENDICULAR BRG. WALLS. SEE PLANS FOR PARALLEL BRG. WALLS. AT NON-BRG. PERPENDICULAR WALLS, USE 2X4* FLAT BLOCKING TO RECEIVE SILL PLATE NAILING. USE TOTAL OF (3) 16d's TOE/NAILS EACH END.

*(2X4 FLAT BLOCKING CAN BE IGNORED IF S.P.N. CAN BE INSTALLED TO TOP OF FLOOR JOISTS.)

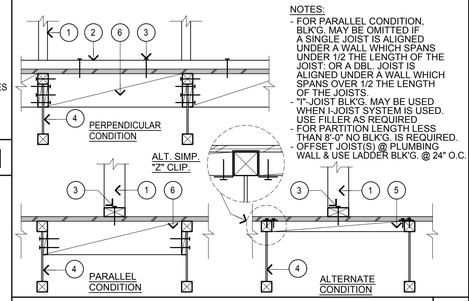

NOTES:
- FOR PARALLEL CONDITION, BLK'G. MAY BE OMITTED IF A SINGLE JOIST IS ALIGNED UNDER A WALL WHICH SPANS UNDER 1/2 THE LENGTH OF THE JOIST; OR A DBL. JOIST IS ALIGNED UNDER A WALL WHICH SPANS OVER 1/2 THE LENGTH OF THE JOISTS.
- "I"-JOIST BLK'G. MAY BE USED WHEN I-JOIST SYSTEM IS USED. USE FILLER AS REQUIRED.
- FOR PARTITION LENGTH LESS THAN 8'-0" NO BLK'G. IS REQUIRED.
- OFFSET JOIST(S) @ PLUMBING WALL & USE LADDER BLK'G. @ 24" O.C.

BEARING & NON-BEARING WALL 7

D0009-120911

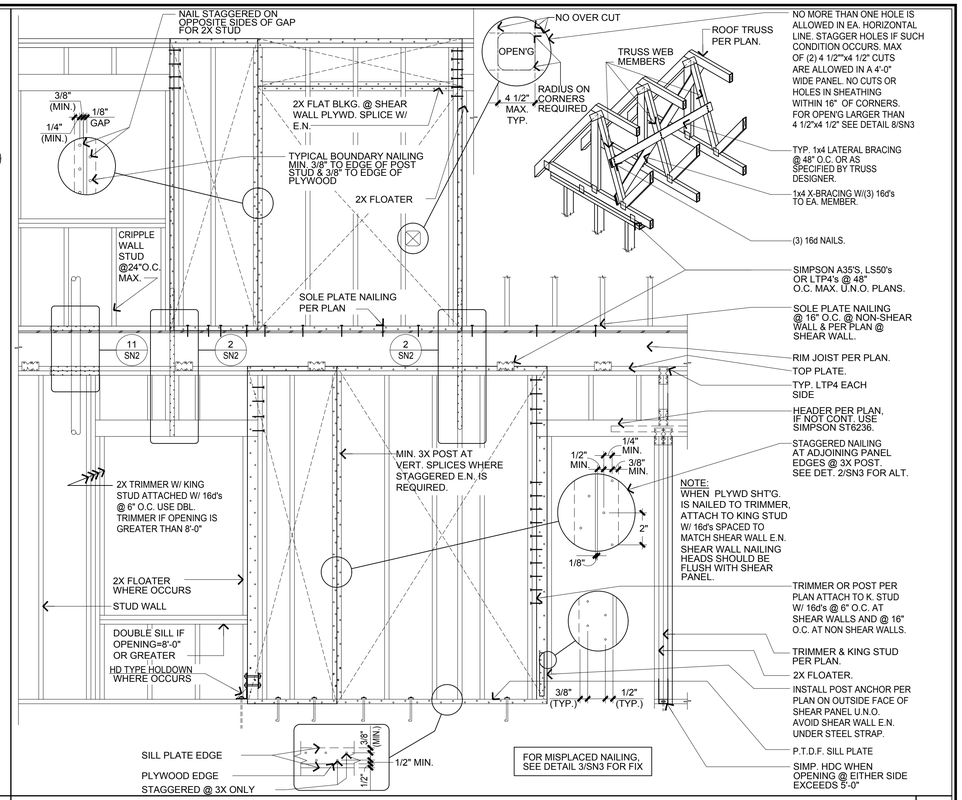

TYPICAL FRAMING ELEVATION 1

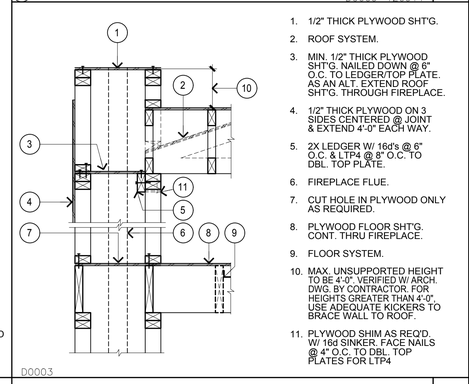

1. FLASHING.
2. WOOD FRAMED WALL.
3. 4" MAX. BRICK VENEER, SEE ARCH. DWG & MANUFACTURER FOR MORE INFORMATION.
4. PER ARCHITECT.
5. 22 GAUGE X7/8" WIDE GALVANIZED CORRUGATED STEEL VENEER ANCHOR @12"O.C. VERT. & MAX. 24" O.C. HORIZONTAL. STEEL ANCHOR SHALL HAVE A LIP OR HOOK ON THE EXTENDED LEG THAT WILL ENGAGE THE CONT. 9 GAGE HORIZ. WIRE. AS AN ALTERNATE, USE ANCHORS @ 18" VERT. & 16" HORIZ.
6. SHEATHING WHERE OCCURS.
7. MORTAR BED.
8. 10d GALVANIZED RING-SHANK NAIL AT BEND IN ANCHOR.
9. IN SEISMIC DESIGN CATEGORIES C,D,E, & F, ADD #9 B.W. GAGE WIRE JOINT REINF. @ 12" O.C. HORIZ.
10. BEAM OR HEADER PER PLAN.
11. 1/2"Φ X 4" LONG LAG SCREWS @ 12" O.C. STAGGERED.
12. ANGLE SIZE / SPAN (MAX.)
    L4X3 1/2x5/16" 8'-0"
    L6x3 1/2x1/2" 13'-0"
    L7x4x5/8" 16'-0"
    (NOTE: STL. ANGLE ARE LLV)
13. MIN. 5/8" MORTAR COVER.
14. MIN. HALF VENEER THICKNESS (1 1/2" MIN.).

NOTE:
- ANGLE NEEDS TO EXTEND & BEAR MIN. 4" ON SIDE OF VENEER.
- MAX. VENEER HEIGHT SUPPORTED BY STEEL ANGLE IS 3'-6".

VENEER 5

D0004-140424

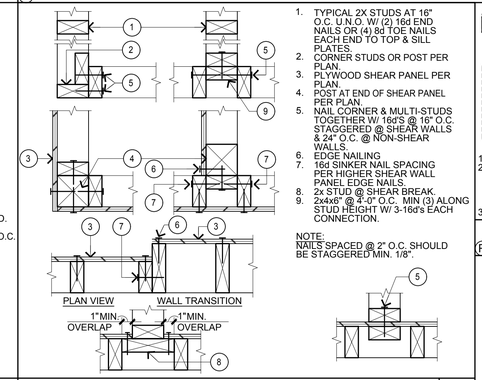

1. TYPICAL 2X STUDS AT 16" O.C. U.N.O. W/ (2) 16d END NAILS OR (4) 8d TOE NAILS EACH END TO TOP & SILL PLATES.
2. CORNER STUDS OR POST PER PLAN.
3. PLYWOOD SHEAR PANEL PER PLAN.
4. POST AT END OF SHEAR PANEL PER PLAN.
5. NAIL CORNER & MULTI-STUDS TOGETHER W/ 16d'S @ 16" O.C. STAGGERED @ SHEAR WALLS & 24" O.C. @ NON-SHEAR WALLS.
6. EDGE NAILING
7. 16d SINKER NAIL SPACING PER HIGHER SHEAR WALL PANEL EDGE NAILS.
8. 2x STUD @ SHEAR BREAK.
9. 2x4x6" @ 4'-0" O.C. MIN (3) ALONG STUD HEIGHT W/ 3-16d's EACH CONNECTION.

NOTE:
NAILS SPACED @ 2" O.C. SHOULD BE STAGGERED MIN. 1/8".

SHEAR WALL/WALL INTERSECTION 4

D0018-110425

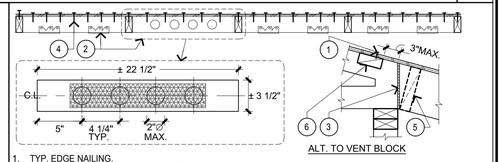

ALT. TO VENT BLOCK

1. TYP. EDGE NAILING.
2. A35 @ 16"O.C. FOR VENT SPACING OF 6'-0" (2-A35's PER ADJACENT BLK's.). AND @ 12" O.C. FOR VENT SPACING OF 4'-0" (3-A35's PER ADJACENT BLK's.). SKIP A35's @ VENT BLOCKING.
3. SCREEN FOR VENTILATION.
4. 8d COMMON EDGE NAILS : @ 4" O.C. FOR VENT SPACING OF 6'-0". @ 3" O.C. FOR VENT SPACING OF 4'-0".
5. ADJOINING FULL HT. BLOCKING PER SHEAR TRANSFER DETAILS.
6. (3) BAYS OF FLAT BLK'G. CENTERED @ SCREEN.

TYPICAL VENT BLOCK 1A

D0014A-110301

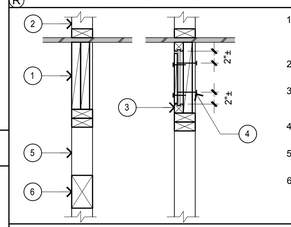

1. SOLID RIM (2X, L.V.L. OR TIMBER STRAND) W/ FULL BEARING. ADD BLKG. AS NEEDED.
2. LOAD BEARING 4X4 (MIN.) POST/MULTI-STUDS ABOVE.
3. "I" JOIST W/ FULL BR'G. & 2X SQUASH BLK'G. ADD FILLERS AS NEEDED.
4. 4-16d'S, 2 @ TOP & 2 @ BOTTOM EACH SIDE.
5. SOLID BLKG./POST, MULTI-STUD OR BEAM BELOW.
6. HEADER PER PLAN

BLOCKING AT POSTS/TRIMMERS 2

D0008-110425

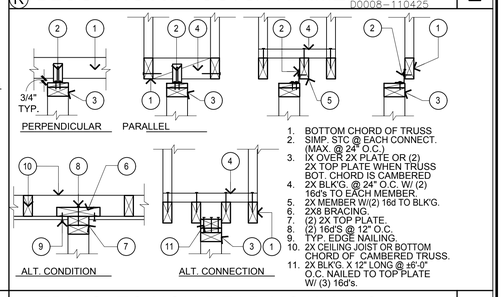

1. BOTTOM CHORD OF TRUSS
2. SIMP. STC @ EACH CONNECT. (MAX. @ 24" O.C.)
3. IX OVER 2X PLATE OR (2) 2X TOP PLATE WHEN TRUSS BOT. CHORD IS CAMBERED
4. 2X BLK'G. @ 24" O.C. W/ (2) 16d's TO EACH MEMBER.
5. 2X MEMBER W/(2) 16d TO BLK'G.
6. 2X6 BRACING.
7. (2) 2X TOP PLATE.
8. (2) 16d'S @ 12" O.C.
9. TYP. EDGE NAILING.
10. 2X CEILING JOIST OR BOTTOM CHORD OF CAMBERED TRUSS.
11. 2X BLK'G. X 12" LONG @ ±6'-0" O.C. NAILED TO TOP PLATE W/ (3) 16d's.

FRM'G. TO NON-BEARING WALLS 3

D0019-141006

GOUVIS engineering
consulting group, inc.
4400 Campus Drive
Newport Beach
CA 92660

Newport Beach
tel 949.752.1612
fax 949.752.5321

Palm Springs
tel 760.323.5090

REGISTERED PROFESSIONAL ENGINEER
MICHAEL HOUSTON MAND
No. C042283
Exp. 3/31/20
CIVIL
STATE OF CALIFORNIA

DATE SIGNED: 4/23/18

RESTRICTIVE NOTICE

THESE DESIGNS, DRAWINGS, AND SPECIFICATIONS ARE THE EXCLUSIVE PROPERTY OF GOUVIS ENGINEERING CONSULTING GROUP, AND ALL INFORMATION SHOWN IS CONFIDENTIAL TO ALL RECIPIENTS AND NO PART OF THESE DRAWINGS CAN BE COPIED, TRANSFERRED, OR REPRODUCED, NOR CAN ANY STRUCTURES BE BUILT FROM THEM WITHOUT WRITTEN CONSENT OF GOUVIS ENGINEERING CONSULTING GROUP

COPYRIGHT GOUVIS ENGINEERING CONSULTING GROUP 2008 ALL RIGHTS RESERVED

PROJECT:
The Colony 65

NOT FOR BID OR CONSTRUCTION

DEVELOPER:

ARCHITECT:
KPI

LOCATION:
Lancaster, Los Angeles, CA

REVISIONS

NO.	DATE	DESCRIPTION

SHEET NAME:
STRUCTURAL DETAILS & NOTES

PROJECT NUMBER:
64797

ENGINEER: X
DRAFTER: X

ISSUED DATE:	PLOT DATE:
03/19/2018	04/23/2018

SHEET NUMBER:
SN-2

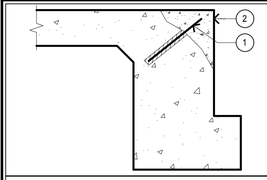

1. #4 DOWELS EMBEDED 4 1/2" INTO EXISTING CONCRETE @ 6" O.C. (MIN. 2).
2. REPLACE CONCRETE SPALLING WITH HIGH STRENGTH CONCRETE MIX, OR EPOXY. (f'c=2500 PSI MIN.).

® CONCRETE SPALLING — FF17–110401 — 17

MISSING HOLDOWN	REPLACE WITH	EXT./INT. FTG. ASTM-A36 ROD Ø	A36 PLATE WASHER	le	ALT. INT. FTG. W/ SIMPSON EPOXY ASTMA307-C ROD Ø	hef	C (MIN.)
HDU2, PA28	HDU2	5/8"	2"x2"x1/4"	12"	1/2"	10"	8"
HTT4	HTT4		2 1/2"x2 1/2"x1/4"		3/4" TO FTG. 5/8" TO HOLDDOWN SEE DET. B	15"	12"
HPA28, HTT5, HPA35 STHD10, STHD14	HTT5						
HDU4	HDU4						
HDU8	HDU8	7/8"	3"x3"x3/8"	13"			
HDQ8	HDQ8		3 1/4"x3 1/4"x3/8"				
HDU11	HDU11	1"	3 1/2"x3 1/2"x3/8"	16"			
HDU14	HDU14		4"x4"x3/8"	19"			

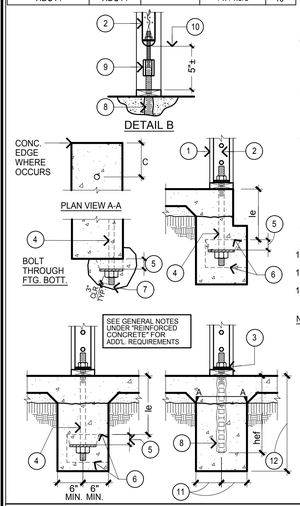

1. MULTI-STUD OR POST PER PLAN
2. NEW HOLDOWN, PER TABLE.
3. ADD 1 1/2"SQ. X 3/16" CUT PLATE WASHER BETWEEN NUT & HOLDOWN FOR 1/2"Ø ADHESIVE ANCHORS ONLY.
4. THREADED ROD (THRU BOLT) W/ HEAVY HEX NUT TACK WELDED TO PLATE WASHER. SEE SCHEDULE FOR PLATE SIZE. ALT. TO TACK WELDING APPLY DOUBLE HEX NUTS TO SECURE PLATE WASHER.
5. 2 1/2" THK. MIN. DRY PACKED NON-SHRINK GROUT ALL AROUND. SURFACE IN CONTACT WITH GROUT SHALL BE CLEANED, FREE OF GREASE AND LAITANCE.
6. NOTCH CONC. ALONG FTG. LENGTH TO 6" MAX. EA. SIDE OF HOLDOWN/ ROD. DO NOT CUT FTG. HORIZ. REINF. SOLID GROUT, WITHOUT ANY VOID, WITH HIGH STRENGTH NON-SHRINK GROUT W/ f'c=5000 psi MIN. CONT. SPECIAL INSPECTION IS REQUIRED.
7. PROVIDE MIN. 3" CONC./NON-SHRINK GROUT COVER ALL AROUND FOR ALL METAL PARTS.
8. THREADED ROD IN SIMPSON EPOXY TO FOOTING PER TABLE.
9. SIMPSON CNW 3/4-5/8 COUPLER.
10. RAISE HOLDOWN BOTTOM FROM SILL PLATE.
11. 6" MIN. FOR 1/2"Ø ROD. 7" MIN. FOR 3/4"Ø ROD.
12. 18 3/4" MIN. FOR 3/4"Ø ROD.

NOTES:

- USE SIMPSON SET-XP EPOXY ADHESIVE ANCHORS, ICC-ESR-#2508 (MAY,2014) REFER TO ICC & MANUFACTURER'S SPECS FOR INSTALLATION PROCEDURES.
- CONTINUOUS SPECIAL INSPECTION & JOB-SITE QUALITY ASSURANCE ARE REQUIRED PER SECTION 4.4 & 4.5 OF ICC-ESR#2508.
- CONCTRACTOR SHALL SPECIFY OVERALL LENGTH OF ANCHOR.
- FOR CUTTING THE SLAB & TIE SLAB BACK SEE DETAIL 7
- FOR OTHER HOLDOWNS NOT LISTED IN TABLE &/OR OTHER COND. NOT INCLUDED HERE, CONTACT GOUVIS ENGINEERING FOR SPECIFIC FIX.
- MINIMUM AGE OF CONCRETE FOR EPOXY FIX IS 21 DAYS.

® FIX FOR MISSING HOLDOWN — D5105–141002 — 18

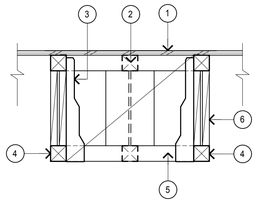

1. TYPICAL FLOOR SHEATHING.
2. SINGLE I–JOIST HEAD OUT "BEYOND".
3. SIMPSON "IUS" HANGER.
4. ADJACENT I-JOIST PER PLAN.
5. I-JOIST/250 BLOCK ALT. SOLID LSL BLOCK @ HEAD OUT. WEB FILLER REQ'D. @ I-JOIST OPTION.
6. WEB FILLER @ EA. SIDE OF I-JOIST @ EA. HANGER LOCATION, PER MANUFACTURER'S SPECIFICATIONS.

NOTE:
FOR SINGLE I-JOIST HEAD OUT @ OUTER 1/3 SPANS ONLY.

® HEAD OUT DETAIL — FF–13 — 12

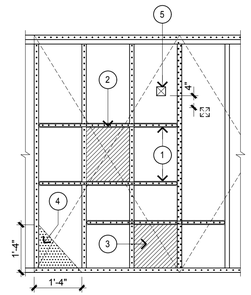

1. 2X BLOCKING
2. SIMP. CS16X48" LONG W/ NAILS @ 2 1/16" O.C.
3. ALT. LOCATION OF OPENING IF CONT. SILL PLATE, NO "CS" STRAP REQUIRED @ BOTTOM.
4. NO CUT OR HOLES IN SHT'G WITHIN 16" OF CORNERS.
5. OPENINGS OF MAX. 4 1/2"x4 1/2" DO NOT NEED BLK'G/STRAP. DO NOT CUT MORE THAN ONE OPENING IN ONE HORIZONTAL LINE (AT ONE ELEVATION) AND OFFSET OPENINGS BY MIN. 4" VERT. SEE DETAIL 1/SN2 FOR OPENINGS SMALLER THAN 4 1/2" x 4 1/2"

NOTE:

- AVOID OPENING IN SHEAR WALLS W/ LENGTH LESS THAN 4'-0".
- MAX. WIDTH OF OPENING TO BE ONE STUD BAY OR 14 1/2".
- DO NOT OVER-CUT ANY FRAMING MEMBER.
- E.N. TO BLK'G. TO MATCH SHEAR WALL E.N., UNLESS STRAP IS PLACED ON TOP OF PLYWOOD.
- EDGE NAIL F.HT. ALONG STUD ON EACH SIDE OF OPENING.
- IF OPENING IS LOCATED AT THE EDGE, EXTEND STRAP INTO THE SHEAR WALL TO MEET MIN. LENGTH REQUIRED.

® FIELD FIX FOR OPENING IN S.W. — 8

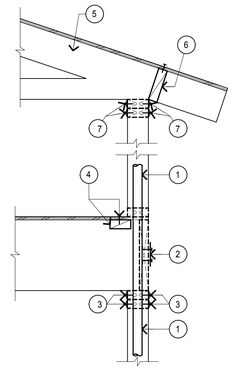

1. PLUMBING OR MECHANICAL LINE IN WALL INTERRUPTING PLATES AND RIM JOIST @ FLOOR LEVEL.
2. SPLICE RIM W/ ST6224 STRAP (U.N.O.) ON PLANS.
3. SPLICE PLATES @ FLR. LEVEL W/ SIMPSON RPS STRAPS W/(6) 16d's @ EA. END OF EA. STRAP. ALT. USE 'ST' STRAP W/(6) 16d's @ EA. END. P/ PLATE. STRAP ONE SIDE ONLY IF PLUMBING CAUSES NOTCH OF PLATE NO MORE THAN 50% OF PLATE WIDTH.
4. ADD NEW FLAT 2x BLK'G MIN. (3) BAY'S @ PIPE W/ (4) 10d's PER BLK'G FROM FLOOR SHT'G. AT BAY W/ INTERRUPTED RIM JOIST. ADD ONE ADDITIONAL BLK'G EACH WAY.
5. ROOF MEMBERS.
6. EAVE BLK'G TO REMAIN.
7. SPLICE UPPER TOP PLATES W/ STRAP AS REQ. P/ DRAG DETAIL ON PLANS. STRAP BOTH SIDES W/ SAME STRAP WHEN CUT EXCEEDS 50% OF PLATE WIDTH. USE 16d SHORT NAILS (2 1/2" LONG).

® WALL W/ PLUMB./ MECH — FF5 — 5

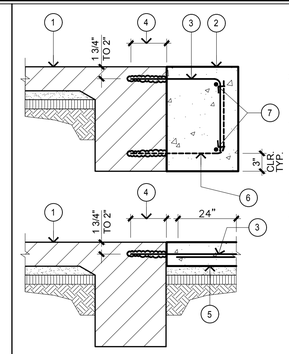

1. EXISTING FOUNDATION
2. NEW FOOTING, MINIMUM SAME SIZE AS EXISTING OR SEE PLAN FOR SIZE.
3. #4 DOWELS @ 18" O.C. BENT AS SHOWN IN FOOTING & OVERLAP MIN. 24" AS SHOWN IN SLAB.
4. MIN. 5" EMBEDMENT OF DOWELS INTO EXISTING CONCRETE W/ SIMPSON SET-XP EPOXY. ESR #2508. PERIODIC SPECIAL INSPECTION IS REQ'D.
5. NEW SLAB PER PLAN
6. ADDITIONAL #4 BOTTOM DOWEL AT ENDS ONLY.
7. FOOTING REINFORCEMENT PER PLAN OR MIN. (1) #4 TOP AND (1) #4 BOTTOM.

® ADDITION OF FTN'G./SLAB AT EXISTING FOUNDATION — FF1 — 1

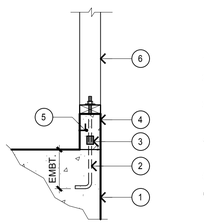

1. EXISTING SLAB & FOOTING.
2. EXISTING 5/8"Ø X12" A.B. SPACED PER PLAN.
3. EXTEND EXISTING A.B. W/ COUPLER NUT & 5/8"Ø RODS TO ADD CONCRETE CURB.
4. MIN. 3 1/2" WIDE X MAX. 12" TALL CURB TO BE ADDED. (f'c=2500 psi) MIN.
5. USE (1) CONT. #3 BAR.
6. 2X STUD WALL PER PLAN.

® STEM WALL ADDITION ON EXISTING SLAB — FF14–101027 — 13

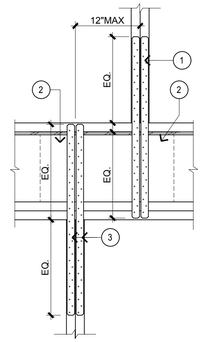

1. STUDS (OR POST) & CS16 STRAPS FROM SHEAR PANEL AT UPPER FLR. TO BE NAILED TO SIDE OF RIM JOIST IN FLOOR SYSTEM. SEE PLANS FOR NO. OF CS16's REQ.
2. ADD SOLID BLK. BEHIND RIM & CONT. 8" PAST STRAPS EA. WAY. NAIL W/(2) ROWS OF 16d's @ 4" O.C.
3. SAME NO. OF CS16 STRAPS APPLIES FROM RIM TO POST AT LOWER FLOOR.

NOTE:
FOR JOISTS PARALLEL TO WALL CONDITIONS ONLY

® TIE DWN. AT OFFSET POSTS — FF10 — 9

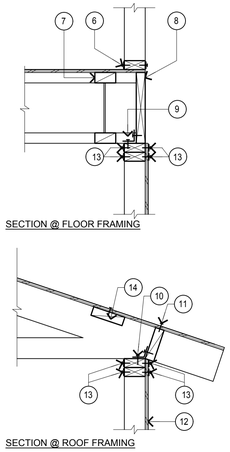

X= LENGTH TO BE ENOUGH TO HAVE MIN. NO. OF NAILS OF SPLICE NAIL AS PER PLAN (STRAPS MUST EXTEND MIN. ONE STUD BAY EACH WAY).

1. TYP. BLK'G OR RIM.
2. ROOF OR FLOOR SHEATHING.
3. ROOF TRUSS OR TJI's @ SIMILAR CONDITION @ FLOOR.
4. 2x4 STUDS.
5. DBL. TOP PLATES.
6. CS STRAP @ EA. SIDE SOLE PLATE IF CUT.
7. ADD FULL HEIGHT BLK'G W/ SHEATHING E.N. @ AFFECTED BAY AND ONE BAY EA. WAY BEYOND. MIN. (3) BAYS OF BLOCKING.
8. RIM INTERRUPTED @ DUCT.
9. A35 PER PLAN AND MIN. (1) EA. SIDE OF BREAK.
10. A35, PER BLOCK.
11. E.N.
12. SHEAR PANEL.
13. (2) CS16 EA. SIDE W/ 10d's @ 2" O.C. MAX STRAPS TO BE NAILED @ TOP OF SHEAR PANEL AND TO HAVE MIN. NO. OF NAILS EQUAL TO SPLICE NAILING PER PLAN. N 10 NAILS MAY BE USED.
14. ADD 2X6 MIN. BLK'G W/ SHEATHING E.N. @ AFFECTED BAY AND ONE BAY EA. WAY BEYOND. MIN. (3) BAYS OF BLOCKING.

® FIELD FIX @ PLATE/RIM BREAK — FF6 — 6

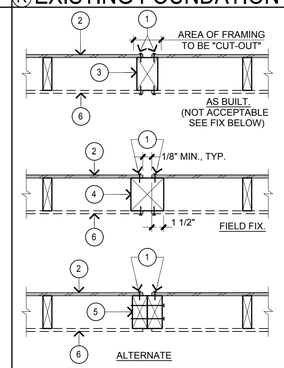

1. EDGE NAILING @ ADJOINING PANEL EDGES, TYP.
2. SHEAR PER PLANS, TYP.
3. 3X MIN. POST (PER SW. SCHED.) MIS-INSTALLED W/ A 2X STUD.
4. NEW POST AS SHOWN. POST TO BE SIZED TO ACHIEVE MIN. 1 1/2" OVERLAP OF SHEAR PANEL.
5. ALTERNATE TO 3X MIN. POST PER SW SCHEDULE. USE (2) 2X STUDS W/ 2 ROWS OF 16d SINKER NAILS (ROWS STAGGERED) WITH SPACING IN EACH ROW PER SCHEDULE BELOW.
6. SHEAR PANEL WHERE OCCURS THIS SIDE ALSO, PER PLAN TYP.

PANEL TYPES	NAIL SPACING
2	@ 12" O.C.
3	@ 9" O.C.
4	@ 6" O.C.
5	@ 5" O.C.
DBL SIDED 3	@ 4" O.C.
DBL SIDED 4	@ 3" O.C.
DBL SIDED 5	@ 2 1/2" O.C.

® FIX AND ALTERNATE @ ADJOINING PANEL EDGES OF SHEAR WALLS — FF2–120124 — 2

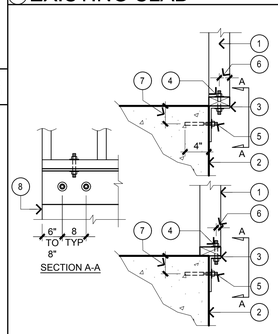

1. EXISTING NON-SHEAR WALL OVERHANGING COMPLETELY OR PARTIALLY OFF FOUNDATION EDGE. MIN 1 1/2" & MAX. 3 1/2".
2. EXISTING FOUNDATION WALL.
3. 3/8" THICK ANGLE IRON TO SUPPORT EDGE OF WALL. HORIZONTAL LEG TO MATCH OVERHANGING WALL (HORIZ. LEG MIN. 2"); VERTICAL LEG MIN. 6".
4. 1/2" Φ WELDED STUD BOLTS @ 16" O.C.
5. 1/2"Φ SIMPSON TITEN HD CONC. SCREW ANCHORS @ 8" O.C. W/ MIN. 6" FROM CONCRETE FOUNDATION EDGE. (ICC-ESR-#2713, SEPT. 2010)
6. 1" MIN.
7. 2"
8. CONC FOUNDATION EDGE.

NOTES:

- ALL METALS EXPOSED TO WEATHER MUST BE PROTECTED AGAINST CORROSION.
- ANGLE TO BE CONTINUOUS.
- CONTACT GOUVIS ENGINEERING FOR ALTERNATIVE FIX FOR THE FOLLOWING CONDITION: OVERHANG < 1 1/2" OR > 3 1/2".

FIX FOR WALL OVERHANGING OFF FOUNDATION EDGE FOR ® 1 & 2 STORY COND. ONLY — FF15–101101 — 14

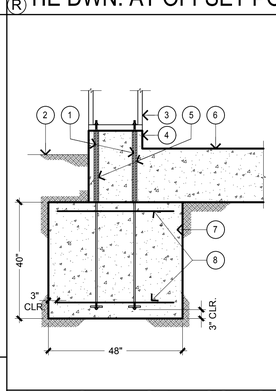

1. TYP. 1 1/8"Ø OR 7/8"Ø THREADED RODS @ PREFABRICATED SHEAR PANEL PER PLAN
2. NATURAL GRADE.
3. PREFABRICATED SHEAR PANEL PER PLAN
4. EXISTING CURB WHERE OCCURS.
5. DRILL HOLES IN EXISTING CURB & FOOTING FOR NEW BOLTS. FILL HOLES W/ SIMP. SET EPOXY PRIOR TO BOLT PLACEMENT.
6. TYP. EXISTING FOOTING.
7. NEW 15" WIDE x 48" LONG GRADE BM. CENTERED @ CORRECTLY PLACED PANEL. WHEN FTG. IS MISSING.
8. (2) NEW #5 BARS TOP & BOTT.

® RETROFIT FOR MISSING FOOTING @ PREFABRICATED SHEAR PANEL. — 10

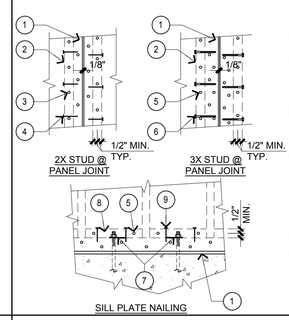

1. EXIST. 2X, 3X PER PLANS.
2. NEW 2X BOTH SIDES.
3. EDGE NAILS TO NEW 2X PER S.W. SCHEDULE.
4. 10d FACE NAILS @ 6" O.C. STAGG. ALONG STUD FACE.
5. EDGE NAILS TO NEW 2X MEMBER @ 2X REQUIRED SPACING (HALF NUMBERS OF NAILS REQ'D.) PER S.W. SCHEDULE.
6. 1/4"Φ x 3 1/2" SDS SCREW FROM NEW 2X TO EXIST. 3X @ 10" O.C. FOR SINGLE SIDED S.W. & @ 5" O.C. FOR DOUBLE SIDED S.W. STAGG. ALONG STUD FACE.
7. NOTCH NEW 2X BLOCKING WHERE ANCHOR BOLT OCCURS.
8. 2X BLOCKING.
9. 10d @ 6" O.C. STAGG. TO (E) 2X SILL PL. PER S.W. SCHED. USE 1/4"Øx3 1/2" SDS SCREWS TO (E) 3X MIN. SILL PLATE PER S.W. SCHED. @ 10" O.C. FOR SINGLE SIDED S.W. & @ 5" O.C. FOR DOUBLE SIDED S.W. STAGGERED FASTENERS ALONG NEW 2X BLOCKING.

® FIELD FIX-MISPLACED NAILING — GE118–120124 — 3

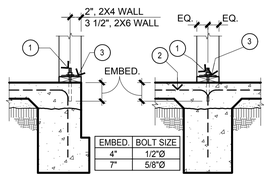

EMBED	BOLT SIZE
4"	1/2"Ø
7"	5/8"Ø

1. POST-INSTALLED ANCHOR PER TABLE. SPACING BETWEEN ANCHORS AND MIN. DISTANCE FROM EXIST. A.B. TO BE 4".
2. DOWEL PER NOTE 5 OF 1/SD1.
3. PLATE WASHER PER FOUNDATION NOTES ON SN1 SHEETS.

NOTES:

- LOCATE ANCHORS @ 12" MIN. FROM CONC EDGE PERPENDICULAR TO WALL.
- FOR NON-SHEAR WALL, INSTALL (1) 1/2"Øx4" EMBEDMENT TITEN HD ANCHOR FOR EACH MISSING OR MISPLACED A.B.
- PERIODIC SPECIAL INSPECTION IS REQUIRED FOR ANCHOR INSTALLATION.
- IF MIN. SPACING AND EDGE DISTANCE CAN NOT BE MET, CONTACT GOUVIS ENGINEERING FOR SPECIFIC FIX.
- MINIMUM AGE OF CONCRETE FOR EPOXY FIX IS 21 DAYS.

® MISSING OR MISPLACED A.B. — D5105–141002 — 19

	REPLACEMENT ANCHORS FOR EACH MISSING ANCHOR BOLT	
WALL TYPE	SIMPSON TITEN HD SCREW ANCHORS 1-POUR OR 2-POUR W/ DOWEL (ICC ESR#2713)	SIMPSON SET-XP-EPOXY ADHESIVE WITH A307 GRADE C ANCHORS 1-POUR OR 2-POUR W/ DOWEL (ICC ESR#2508)
EXT. 2X4 SILL/3X4 SILL	(2) 1/2"Ø	(1) 5/8"Ø
EXT. 2X6 SILL/3X6 SILL		
INT. 2X & 3X SILL		

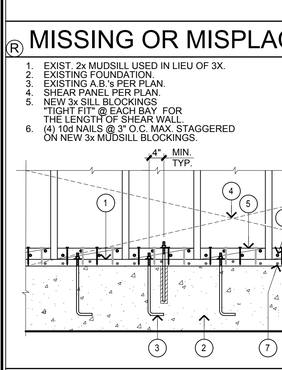

1. EXIST. 2x MUDSILL USED IN LIEU OF 3X.
2. EXISTING FOUNDATION.
3. EXISTING A.B.'s PER PLAN.
4. SHEAR PANEL PER PLAN.
5. NEW 3x SILL BLOCKINGS "TIGHT FIT" @ EACH BAY FOR THE LENGTH OF SHEAR WALL.
6. (4) 10d NAILS @ 3" O.C. MAX. STAGGERED ON NEW 3x MUDSILL BLOCKINGS.
7. (E) SHEAR WALL EDGE NAILS PER SHEAR WALL SCHEDULE.
8. ADD 1/2"Ø SIMPSON TITEN HD SCREW ANCHORS FOR EVERY (2) ANCHOR BOLTS. PERIODIC SPECIAL INSPECTION IS REQUIRED PER ICC ESR 2713.
9. (4) 1/4"Ø x 3 1/2" SDS SCREWS STAGGERED ON NEW 3x SILL BLOCKING TO EXIST. 2x SILL PLATE.

® FIX FOR MISSING 3x SILL PLATE — FF3–110401 — 20

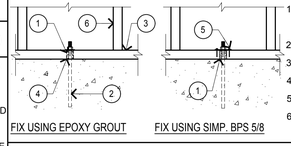

NOTES:
- FOLLOW MFR. SPECIFICATIONS FOR INSTALLATION OF ABU AND ANCHORAGE SYSTEM
- PAD FOOTING BELOW SHOULD BE NO MORE THAN ± 8" OFFSET FROM POST LOCATION

1. POST PER PLAN.
2. SIMPSON ABU COLUMN BASE TO MATCH POST SIZE.
3. 5/8" DIA. SIMPSON WEDGE ALL ANCHOR W/ 4 1/2" MIN. EMBEDMENT INTO CONCRETE @ MIDDLE OF SLAB CONDITION.
4. 5/8" DIA. THREADED ROD EMBEDDED 5" INTO CONCRETE W/ SIMPSON SET EPOXY.

® FIX FOR OVERSIZED HOLE — D5088 — 15

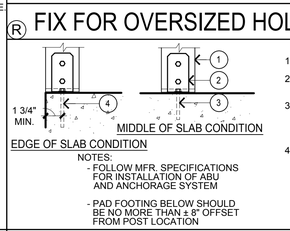

STRAP	# OF BOLTS	# OF NAILS
STHD10	2	(23) NAILS
STHD14	3	(32) NAILS

NOTES:

ALL METALS EXPOSED TO WEATHER OR EARTH SHALL BE GALVANIZED TREATED AND PROTECED AGAINST CORROSION.

MIN. CONCRETE STRENGTH f'c= 2000psi.

OVERALL LENGTH OF STRAP TO BE SPECIFIED BASED ON SITE CONDITION, BY CONTRACTOR, SIMPSON "MST" STRAP (OR EQUAL) MAY BE USED IF LENGTH IS ADEQUATE.

® FIX FOR MISSING HOLDOWN @ PLACES WHERE HTT5 HOLDOWN FIX CANNOT BE APPLIED — FF12 — 11

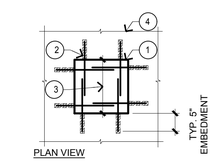

NOTES FOR P.T. SLAB:

- MARK-UP TENDON ROUTE IN BOTH DIRECTIONS ON SLAB SURFACE IN THE VICINITY OF THE PROPOSED OPENING PRIOR TO PROCEEDING WITH THE SLAB EXCAVATION.
- DE-TENSION ALL TENDONS PASSING THRU THE AREA BEING CUT. IF CUTTING BETWEEN TENDONS, NO NEED TO DE-TENSION CABLES, BUT CUT MUST BE 6" AWAY FROM CABLE.
- EXTREME CARE SHALL BE TAKEN NOT TO DAMAGE ANY TENDON DURING REPAIR.
- POUR NEW 4000 PSI CONCRETE TENDONS SHALL NOT BE RE-STRESSED UNTIL NEW CONC. REACHES 3000 PSI. (IN CASE TENDONS WERE DE-TENSIONED).
- SPECIAL INSPECTION IS REQUIRED DURING CONSTRUCTION PROCESS.

1. OPENING IN CONC. SLAB.
2. TYP. #4 DOWELS @ 12" O.C. (MIN. 2 PER SIDE) EMBEDDED IN SLAB AS SHOWN W/ EPOXY GROUT MIX. USE DOWELS TOP & BOTTOM @ 8" OR THICKER SLAB. PLACE DOWELS APPROXIMATELY 1 3/4" FROM TOP OF SLAB.
3. WIDTH OF OPENING MUST BE MIN. 20" TO ALLOW FOR DOWELING AS SHOWN.
4. PROVIDE VAPOR BARRIER UNDER SLAB

® FIX FOR CUTS IN SLABS — FF7 — 7

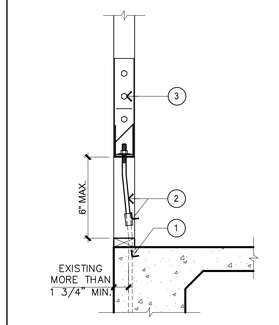

1. EXISTING ANCHOR MISPLACED.
2. USE APPROVED COUPLER AND EXTEND ROD W/ SLIGHT ANGLE TO CENTER ROD IN WALL. USE 12:1 RATIO (12" HIGH FOR 1" OFFSET).
3. RAISE HOLDOWN BRACKET HIGH ON WALL TO RECEIVE EXTENSION ROD.

NOTE:

THIS FIX SHALL NOT BE USED IF ANCHOR IS MISPLACED TOWARD OUTSIDE EDGE OF CONC. DUE TO MIN. EDGE DISTANCE REQUIREMENTS.

® MISPLACED HOLDOWN ANCHOR — FF4 — 4

GOUVIS engineering
consulting group, inc.
4400 Campus Drive
Newport Beach
CA 92660

Newport Beach
tel 949.752.1612
fax 949.752.5321

Palm Springs
tel 760.323.5090

REGISTERED PROFESSIONAL ENGINEER — MINE HOUSHMAND — No. C042283 — Exp. 3/31/20 — CIVIL — STATE OF CALIFORNIA

DATE SIGNED: 4/23/18

RESTRICTIVE NOTICE

THESE DESIGNS, DRAWINGS, AND SPECIFICATIONS ARE THE EXCLUSIVE PROPERTY OF GOUVIS ENGINEERING CONSULTING GROUP, AND ALL INFORMATION SHOWN IS CONFIDENTIAL TO ALL RECIPIENTS AND NO PART OF THESE DRAWINGS CAN BE COPIED, TRANSFERRED, OR REPRODUCED, NOR CAN ANY STRUCTURES BE BUILT FROM THEM WITHOUT WRITTEN CONSENT OF GOUVIS ENGINEERING CONSULTING GROUP

COPYRIGHT GOUVIS ENGINEERING CONSULTING GROUP 2008 ALL RIGHTS RESERVED

PROJECT:
The Colony
65

NOT FOR BID OR CONSTRUCTION

DEVELOPER:

ARCHITECT:
KPI

LOCATION:
Lancaster,
Los Angeles,
CA

REVISIONS

NO.	DATE	DESCRIPTION

SHEET NAME:
STRUCTURAL DETAILS & NOTES

PROJECT NUMBER:
64797

ENGINEER: X
DRAFTER: X

ISSUED DATE:	PLOT DATE:
03/19/2018	04/23/2018

SHEET NUMBER:
SN-3

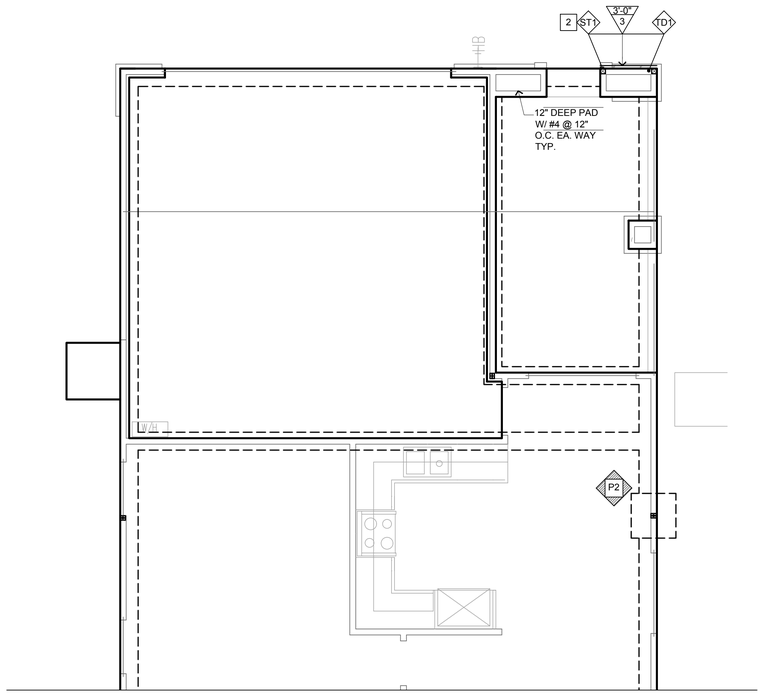

PARTIAL FOUNDATION PLAN
PLAN 1B - C & D

ALL INFORMATION FROM BASIC PLAN APPLIES TO ALTERNATE ELEVATION (U.N.O.)

SCALE : 1/4" = 1'-0"

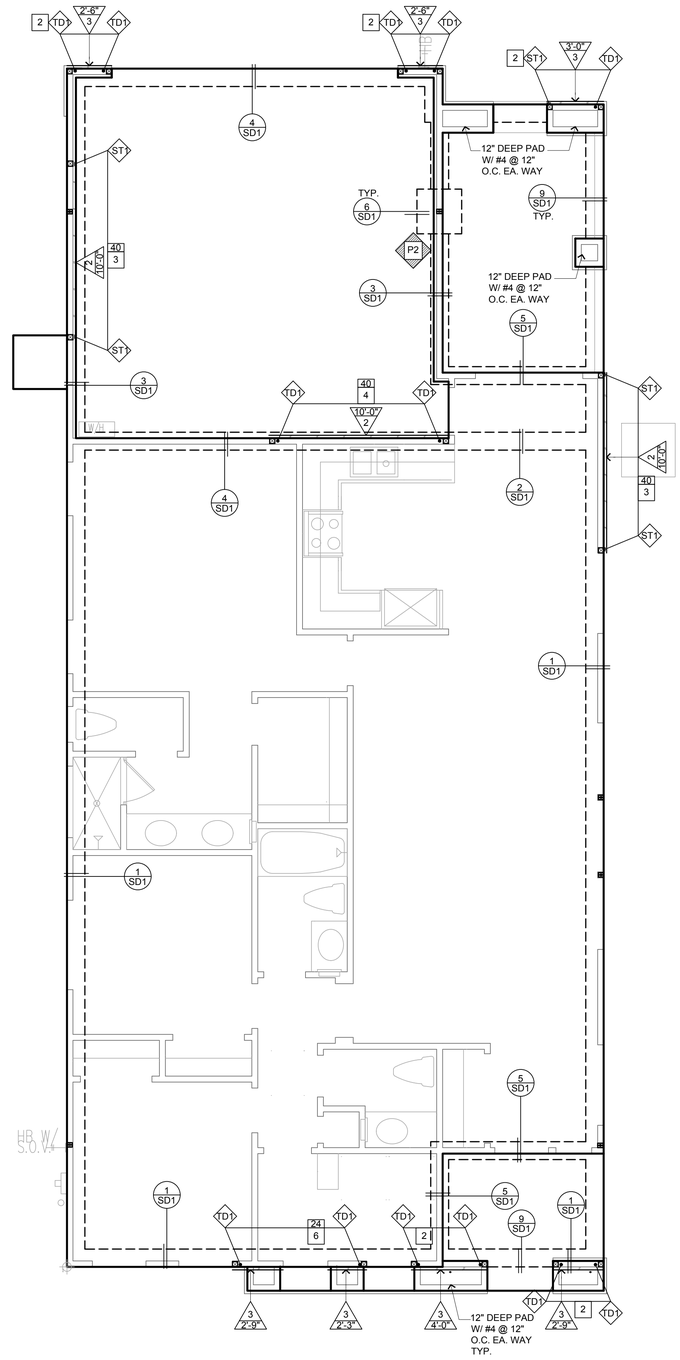

FOUNDATION PLAN
PLAN 1A

SCALE : 1/4" = 1'-0"

SYMBOLS LEGEND

- FOOTING
- DROP IN SLAB (VERIFY PRIOR TO CONSTRUCTION)
- REBAR
- PAD NUMBER
- SHEAR PANEL LENGTH AND NUMBER. REFER TO SN-1 FOR PANEL TYPE, MIN. 2-2x4 @ EA. END.
- DETAIL NUMBER / DETAIL SHEET NUMBER
- HOLDOWN NUMBER
- MAXIMUM SPACING\ / TOTAL MINIMUM NUMBER OF ANCHOR BOLTS EQUALLY SPACED AS POSSIBLE. SEE GENERAL NOTES ON SN-1 SHEET(S) FOR OTHER REQUIREMENTS. FOR NON-SHEAR WALLS, MASA/MASAP MUDSILL ANCHORS CAN BE USED IN LIEU OF ANCHOR BOLTS, ON A ONE TO ONE BASIS, WITH END DISTANCE OF 4" MIN. PER ESR #2555.

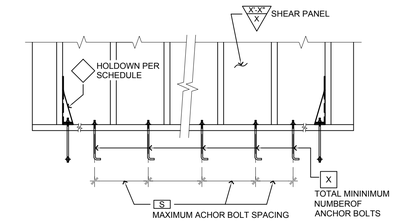

PAD SCHEDULE

SYM.	PAD TYPE
P1	2'-0" SQ. X 12" DEEP PAD W/ (3) #4 E.W.
P2	2'-6" SQ. X 12" DEEP PAD W/ (4) #4 E.W.
P3	3'-0" SQ. X 12" DEEP PAD W/ (4) #4 E.W.
P4	3'-6" SQ. X 12" DEEP PAD W/ (5) #4 E.W.
P5	4'-0" SQ. X 12" DEEP PAD W/ (6) #4 E.W.
P6	4'-6" SQ. X 12" DEEP PAD W/ (6) #4 E.W.
P7	5'-0" SQ. X 18" DEEP PAD W/ (7) #5 E.W.
P8	5'-6" SQ. X 18" DEEP PAD W/ (7) #5 E.W.

HOLDOWN SCHEDULE

SYM.	HOLDOWNS	MIN. POST SIZE (U.N.O. ON PLAN)	BOLT TYPES	CONC PAD SIZES FOR PAB BOLTS
ST1	STHD10	2-2 x 4 OR 4 x 4		
ST2	STHD14	2-2 x 4 OR 4 x 4		
ST3	STHD10RJ	2-2 x 4 OR 4 x 4		
ST4	STHD14RJ	2-2 x 4 OR 4 x 4		
TD1	HTT5	2-2 x 4 OR 4 x 4	SSTB24 OR PAB5	1'-6" SQ. x 12" DEEP
TD2	HDU8	4 x 4	SSTB28 OR PAB7	2'-3" SQ. x 15" DEEP
TD3	HDQ8	4 x 4	SSTB28 OR PAB7	2'-3" SQ. x 15" DEEP
TD4	HDU11	4 x 6	PAB8	2'-9" SQ. x 16" DEEP
TD5	HDU14	4 x 8	PAB8	2'-9" SQ. x 16" DEEP
TD6	HHDQ11	4 x 6	PAB8	2'-9" SQ. x 16" DEEP
TD7	HHDQ14	4 x 8	PAB8	2'-9" SQ. x 16" DEEP
TD8	HD12	4 x 6	PAB9	3'-2" SQ. x 18" DEEP
TD9	HD19	6 x 6	PAB10	3'-8" SQ. x 20" DEEP

NOTE: REFER TO 16/SD1 FOR TD HOLDOWNS AND 17/SD1 FOR ST HOLDOWNS.

FOUNDATION NOTES

1. REFER TO SN-1 SHEET FOR MORE INFO.
2. FOR SHEAR PANEL TYPE X-X/3, X-X/4 & X-X/5 ON BOTH SIDES OF WALL, USE MIN. 3X6 SILL PLATES U.N.O.

GOUVIS engineering
consulting group, inc.
4400 Campus Drive
Newport Beach
CA 92660

Newport Beach
tel 949.752.1612
fax 949.752.5321

Palm Springs
tel 760.323.5090

REGISTERED PROFESSIONAL ENGINEER
MICHAEL HOUSMAN AND
No. C042283
Exp. 3/31/20
CIVIL
STATE OF CALIFORNIA

DATE SIGNED: 4/23/18

RESTRICTIVE NOTICE

THESE DESIGNS, DRAWINGS, AND SPECIFICATIONS ARE THE EXCLUSIVE PROPERTY OF GOUVIS ENGINEERING CONSULTING GROUP, AND ALL INFORMATION SHOWN IS CONFIDENTIAL TO ALL RECIPIENTS AND NO PART OF THESE DRAWINGS CAN BE COPIED, TRANSFERRED, OR REPRODUCED, NOR CAN ANY STRUCTURES BE BUILT FROM THEM WITHOUT WRITTEN CONSENT OF GOUVIS ENGINEERING CONSULTING GROUP

COPYRIGHT GOUVIS ENGINEERING CONSULTING GROUP 2008 ALL RIGHTS RESERVED

PROJECT:
The Colony
65

NOT FOR BID OR CONSTRUCTION

DEVELOPER:

ARCHITECT:
KPI

LOCATION:
Lancaster,
Los Angeles,
CA

REVISIONS

NO.	DATE	DESCRIPTION

SHEET NAME:
FOUNDATION PLAN
PLAN 1

PROJECT NUMBER:
64797

ENGINEER: TH
DRAFTER: TH

ISSUED DATE:	PLOT DATE:
03/19/2018	04/23/2018

SHEET NUMBER:
S-1.1

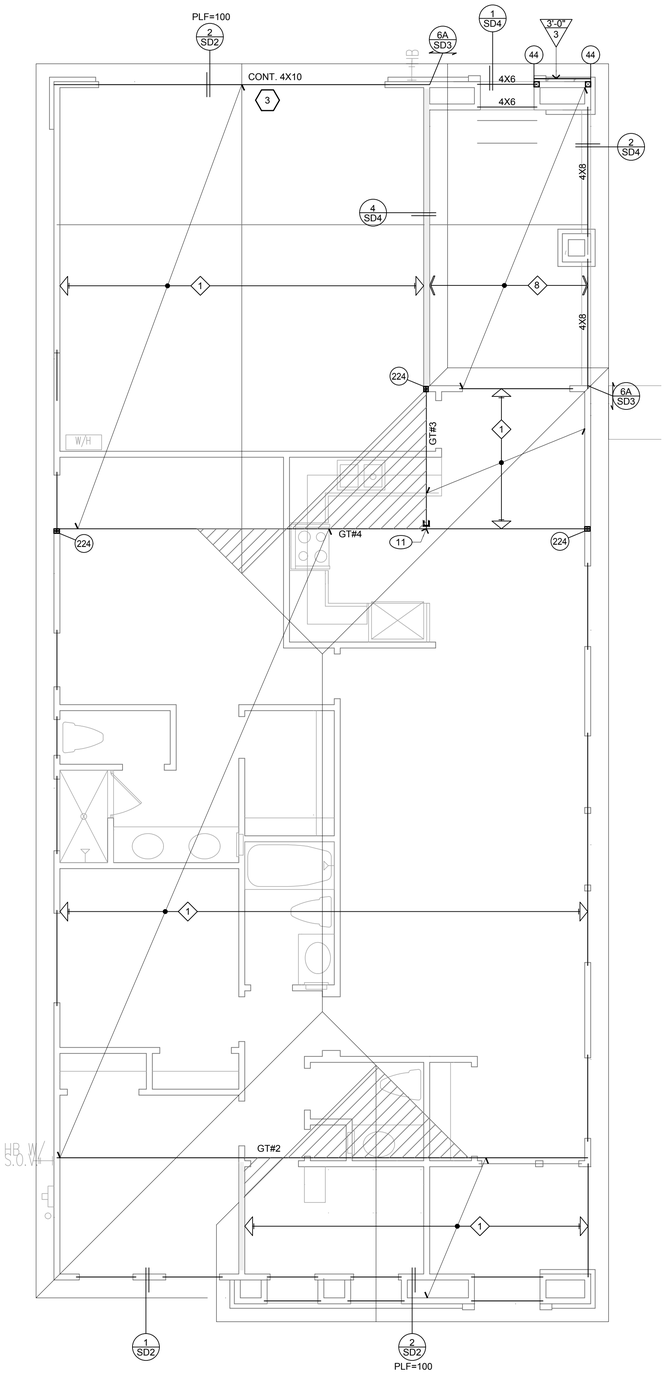

PARTIAL FRAMING PLAN
PLAN 1B

ALL INFORMATION FROM BASIC PLAN APPLIES TO ALTERNATE ELEVATION (U.N.O.)

SCALE : 1/4" = 1'-0"

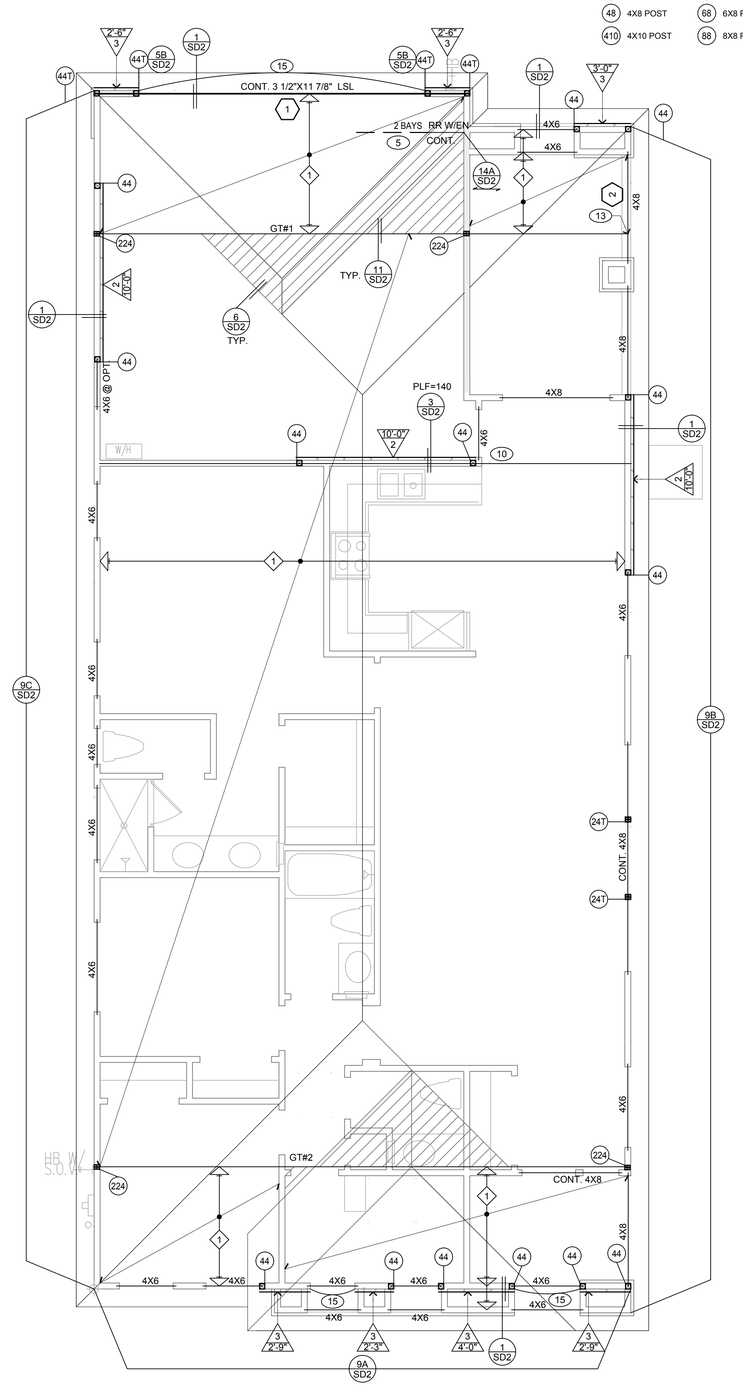

FRAMING PLAN
PLAN 1A

SCALE : 1/4" = 1'-0"

STUD AND TRIMMER SCHEDULE

24	2X4 STUD	226	2-2X6 STUD	14T	2X4 TRIMMER	26T	2-2X6 TRIMMER
26	2X6 STUD	324	3-2X4 STUD	16T	2X6 TRIMMER	34T	3-2X4 TRIMMER
224	2-2X4 STUD	326	3-2X6 STUD	24T	2-2X4 TRIMMER	36T	3-2X6 TRIMMER

POST AND TRIMMER SCHEDULE

44	4X4 POST	412	4X12 POST	44T	4X4 TRIMMER	42T	4X12 TRIMMER
46	4X6 POST	66	6X6 POST	46T	4X6 TRIMMER	66T	6X6 TRIMMER
48	4X8 POST	68	6X8 POST	48T	4X8 TRIMMER	68T	6X8 TRIMMER
410	4X10 POST	88	8X8 POST	41T	4X10 TRIMMER	88T	8X8 TRIMMER

SYMBOLS LEGEND

- POST OR TRIMMER AS NOTED
- DIRECTION OF ROOF MEMBER PER SCHEDULE, REFER TO HATCHED WALLS ON PLANS FOR INTERMEDIATE BR'G
- DIRECTION OF FLOOR MEMBER PER SCHEDULE, REFER TO HATCHED WALLS ON PLANS FOR INTERMEDIATE BR'G
- DIRECTION OF DECK MEMBER PER SCHEDULE. REFER TO HATCHED WALLS ON PLANS FOR INTERMEDIATE BR'G
- X-X" / X — SHEAR PANEL LENGTH AND NUMBER. REFER TO SN-1 FOR PANEL TYPE, MIN. 2-2x4 @ EA. END.
- X / SDX — DETAIL NUMBER / DETAIL SHEET NUMBER
- X — BEAM NUMBER, REFER TO GOUVIS ENGINEERING CALCULATIONS
- X — KEY NOTE NUMBER
- BEARING WALL
- CALIFORNIA FRAMING

KEY NOTES

1. CONTINUOUS TIMBERSTRAND OR SPLICE PER PLAN.
2. ALIGN STUD(S) / POST(S) WITH UPPER FLOOR STUD(S) / POST(S) AND PROVIDE SOLID BLOCKING BETWEEN FLOOR (PROVIDE E.N. WHEN POST IS LOCATED WITHIN S.W.)
3. CONTINUOUS JOIST W/ E.N.
4. DRAG STRUT W/E.N.. SEE PLANS/DETAILS FOR LENGTH. SUPPORT END W/ BLK'G
5. LINE OF 2X FLAT BLOCKING W/ EDGE NAIL. & CONTINUOUS CS16 STRAP OVER U.N.O. SEE PLAN FOR NUMBER OF BAYS.
6. CONTINUOUS FULL HT. BLKG. W/E.N. SEE PLANS FOR NUMBER OF BAYS (U.N.O.)
7. CONTINUOUS LINE OF BLOCKING W/ EDGE NAIL UNDER SHEAR WALL ABOVE W/ (1) CS16, U.N.O.
8. BLOCKED ROOF DIAPHRAGM W/ 8d's @ 4" O.C. B.N., 6" O.C. E.N. & 12" O.C. FIELD.
9. BLOCKED FLOOR DIAPHRAGM W/ 10d's @ 4" O.C. B.N., 6" O.C. E.N. & 12" O.C. FIELD.
10. SHEAR TRUSS W/E.N. TRUSS TO TRANSFER 180 PLF MIN. (U.N.O.)
11. TRUSS HANGER BY TRUSS SUPPLIER
12. (1) SIMPSON TS22 FLUSH BEAM TO DROP BEAM (U.N.O.)
13. PROVIDE SOLID BLOCKING
14. DRAG TRUSS W/E.N. TRUSS TO TRANSFER 1650# FORCE MIN. (U.N.O.)
15. BLOCKED OPENING SEE DETAIL 15/SD2

FRAMING SCHEDULE

1. DESIGNED ROOF TRUSSES @ 24" O.C.
2. 14" TJI 210 I-JOISTS (OR EQUAL) @ 19.2" O.C.
3. 14" TJI 210 I-JOISTS (OR EQUAL) @ 16" O.C.
4. 14" TJI 360 I-JOISTS (OR EQUAL) @ 16" O.C.
5. 14" TJI 560 I-JOISTS (OR EQUAL) @ 16" O.C.
6. 2 X 12 DECK JOISTS @ 16" O.C.
7. 2 X 10 ROOF JOISTS / RAFTERS @ 16" O.C.
8. 2 X 8 ROOF JOISTS / RAFTERS @ 16" O.C.
9. 2 X 6 ROOF RAFTERS @ 16" O.C.
10. -

MANUFACTURER		I LEVEL BY WEYERHAEUSER	LOUISIANA PACIFIC	BOISE CASCADE	ROSEBURG
ICC-ES REPORT		ESR-1153	ESR-1305	ESR-1336	ESR-1251
DEPTH	11 7/8"	TJI 210	LPI 36	BCI 6000-1.7	RFPI-400
		TJI 360	LPI 56	BCI 60-2.0	RFPI-70
		TJI 560	N/A	BCI 90-2.0	RFPI-90
	14" & 16"	TJI 210	LPI 32 PLUS	BCI 6000-1.8	RFPI-400
		TJI 360	LPI 56	BCI 60-2.0	RFPI-70
		TJI 560	N/A	N/A	RFPI-90

FRAMING NOTES

1. REFER TO STRUCTURAL GENERAL NOTES AND DETAIL SHEETS (SN-1 & SN-2) FOR MORE INFORMATION.
2. REFER TO DETAIL 3/SN2 FOR TYPICAL CONNECTION AT ALL INTERIOR NON-BEARING WALLS AT ROOF LEVEL.
3. SHEAR WALLS CANNOT BE USED AS PLUMBING WALLS, UNLESS APPROVED BY GOUVIS ENGINEERING CONSULTING GROUP IN WRITING.
4. AT DOUBLE SIDED SHEAR WALLS, POST W/E.N. PER PLAN TO RECEIVE E.N. FROM BOTH SIDES.
5. WHEN MULTIPLE STUDS ARE USED INSTEAD OF A SINGLE POST, PLYWOOD SHEAR WALL TO BE NAILED TO ALL STUDS RECEIVING HOLDOWNS.
6. APPLY SHEAR PRIOR TO FRAMING OF PERPENDICULAR WALLS. DO NOT BREAK SHEAR AT PERPENDICULAR WALL LOCATIONS UNLESS SPECIFICALLY DETAILED ON PLANS.

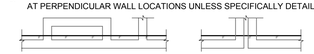

7. ALL VERTICAL PIPES THROUGH PLATES AND/OR SOLID RIM BEAMS MUST BE DRILLED CLEAN CUT W/ 1/16" TOLERANCE. DO NOT NOTCH OR CUT PLATES.
8. ALL BEAMS SHOWN ARE DROP (U.N.O.) ON PLANS.
9. AS AN ALTERNATE TO USING SIMPSON PRODUCTS OTHER CONNECTORS CAN BE USED, AS LONG AS THEIR CAPACITIES ARE EQUAL TO OR BETTER THAN SIMPSON'S, AND SUBJECTED TO THE APPROVAL OF GOUVIS ENGINERING.
10. USE SIMPSON " IUS/ITS/U310 " HANGERS FOR CONNECTION OF I-JOISTS TO OTHER FRAMING MEMBERS (U.N.O.) AND " LUS " HANGERS FOR CONNECTION OF SOLID JOISTS.
11. ALL WOOD I-JOISTS SHALL BE IN COMPLIANCE WITH THE PROVISIONS OF APA PRI-400, EWS-Z725B (PERFORMANCE RATED I-JOIST STANDARD) OR ASTM D5055. QUALIFIED PRI-400, MANUFACTURED. I-JOIST CAN BE ANY OF THOSE LISTED IN THE TABLE ABOVE.
12. THE FOLLOWING BEAMS/HEADERS/RIMS CAN BE FROM ANY MANUFACTURER WITH CURRENT APPROVED ICC ES - EVALUATION REPORT WITH THE FOLLOWING MECHANICAL PROPERTIES:
    FOR "LVL" & "PSL" BEAMS:
    Fb = 2900 psi (MIN), Fv = 290 psi (MIN), E = 2.0 x 10^6 psi (MIN).
    FOR "LSL" BEAMS/HEADERS:
    Fb = 2325 psi (MIN), Fv = 400 psi (MIN), E = 1.55 x 10^6 psi (MIN).
    FOR MANUFACTURED RIM BOARD WITH MIN 1 1/4" THICK, CONTINUOUSLY SUPPORTED BY WALL, AND MATCHES JOIST DEPTH:
    Fc ⊥ (PERPENDICULAR)..... = 680 psi (MIN)
    Fc // (PARALLEL)..... = 1400 psi (MIN)
    Ft = 1075 psi (MIN), E = 1.3 x 10^6 psi (MIN)
    GLU-LAM BEAM SHALL BE 24F-V4, DF/DF.
    Fb = 2400 psi @ BOTTOM, Fb = 1850 psi @ TOP
    Fv = 265 psi (MIN), E = 1.8 x 10^6 psi (MIN).
13. A 4x6 (ALT. 2-2x6) HDR. SHOULD BE USED AT ALL OPENINGS IN EXTERIOR & INTERIOR BEARING WALLS U.N.O. ON PLANS. REFER TO THE FOLLOWING TABLE FOR OTHER COMMON HEADER SIZES.

PLAN DESIGNATION	HEADER SIZE	ALT. HEADER SIZE *
H1	4 x 4	2 - 2 x 4
H2	4 x 8	2 - 2 x 8

* 2-2 x SHALL BE PLACED ON END W/ 1/2" PLYWOOD SHIM BETWEEN. PROVIDE 16d NAILS @ 16" O.C., STAGG., BOTH SIDES.

14. THE FOLLOWING TRIMMER SCHEDULE SHOULD BE USED FOR HEADERS IN BEARING WALLS, U.N.O. ON THE PLAN. REQUIRED TRIMMER MUST BE APPLIED @ EACH END OF HEADER.

CLEAR SPAN, L		
L ≤ 6'-0"	6'-0" < L ≤ 10'-0"	L ≥ 10'-0"
2 x 4	2-2 x 4	SEE PLAN

15. FLOOR TO FLOOR HOLDOWN (X) APPLY DETAIL AT EACH END OF SHEAR WALL PER PLAN. (2) LOCATIONS PER WALL AS SHOWN BELOW. SEE TABLE FOR TYPE & DETAIL REFFERENCE. MIN. POST SIZE IS NOTED IN THE DETAIL

PER PLAN	REFERENCE & APPLY DETAIL	PER PLAN	REFERENCE & APPLY DETAIL	PER PLAN	REFERENCE & APPLY DETAIL
A	1A / SD-3	D	1D / SD-3	G	1G / SD-3
B	1B / SD-3	E	1E / SD-3		- -
C	1C / SD-3	F	1F / SD-3		- -

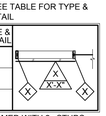

16. INTERIOR NON-BEARING & NON-SHEAR WALLS MAY BE FRAMED WITH 2x STUDS AT 24" O.C., MAX.
17. TOP PLATES AT ALL ROOF FRAMING LEVELS SHOULD BE SPLICED PER 9A/SD2 U.N.O. ON PLANS.
18. CONTINUOUS 1 ¼" LSL RIM JOISTS SHOULD BE USED AT ALL FLOOR FRAMING EDGES WHERE POSSIBLE. ALL RIM BREAKS SHOULD BE SPLICED WITH A SINGLE CS16 X36" STRAP, PER 4A/SD2 U.NO. ON PLANS.

GOUVIS engineering consulting group, inc.
4400 Campus Drive
Newport Beach
CA 92660

Newport Beach
tel 949.752.1612
fax 949.752.5321

Palm Springs
tel 760.323.5090

REGISTERED PROFESSIONAL ENGINEER MICHAEL HOUSHMAND No. C042283 Exp. 3/31/20 CIVIL STATE OF CALIFORNIA

DATE SIGNED: 4/23/18

RESTRICTIVE NOTICE

THESE DESIGNS, DRAWINGS, AND SPECIFICATIONS ARE THE EXCLUSIVE PROPERTY OF GOUVIS ENGINEERING CONSULTING GROUP, AND ALL INFORMATION SHOWN IS CONFIDENTIAL TO ALL RECIPIENTS AND NO PART OF THESE DRAWINGS CAN BE COPIED, TRANSFERRED, OR REPRODUCED, NOR CAN ANY STRUCTURES BE BUILT FROM THEM WITHOUT WRITTEN CONSENT OF GOUVIS ENGINEERING CONSULTING GROUP

COPYRIGHT GOUVIS ENGINEERING CONSULTING GROUP 2008 ALL RIGHTS RESERVED

PROJECT:
The Colony 65

NOT FOR BID OR CONSTRUCTION

DEVELOPER:

ARCHITECT:
KPI

LOCATION:
Lancaster, Los Angeles, CA

REVISIONS

NO.	DATE	DESCRIPTION

SHEET NAME:
FRAMING PLAN
PLAN 1A&B

PROJECT NUMBER:
64797

ENGINEER: TH
DRAFTER: TH

ISSUED DATE:	PLOT DATE:
03/19/2018	04/23/2018

SHEET NUMBER:
S-1.2

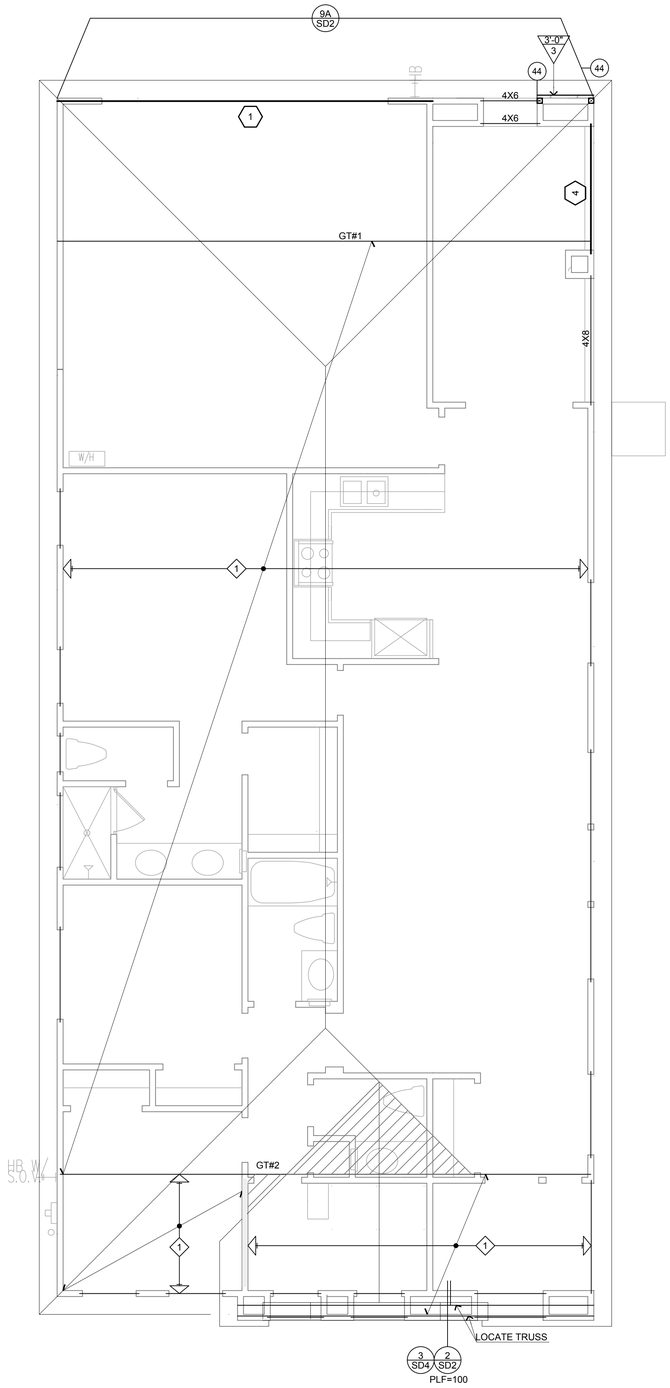

PARTIAL
FRAMING PLAN
PLAN 1D

ALL INFORMATION FROM BASIC PLAN APPLIES TO ALTERNATE ELEVATION (U.N.O.)

SCALE : 1/4" = 1'-0"

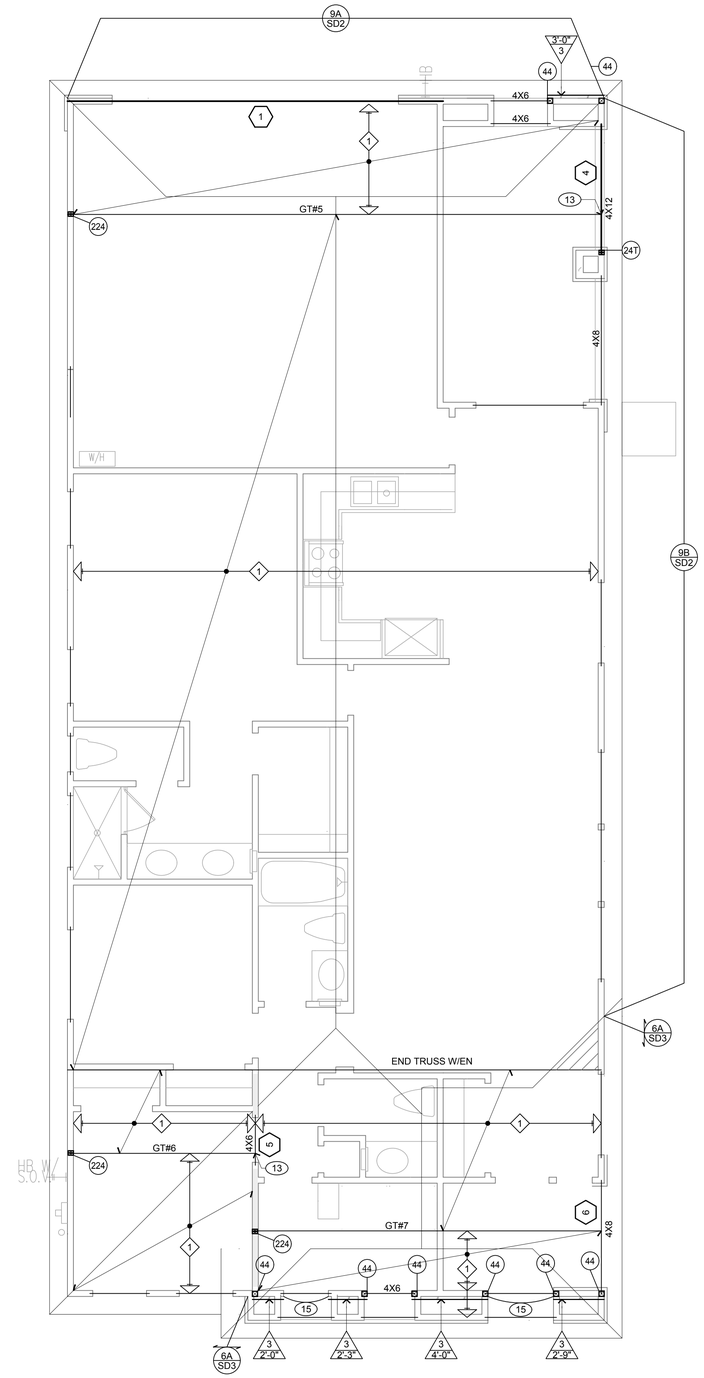

PARTIAL
FRAMING PLAN
PLAN 1C

ALL INFORMATION FROM BASIC PLAN APPLIES TO ALTERNATE ELEVATION (U.N.O.)

SCALE : 1/4" = 1'-0"

GOUVIS engineering
consulting group, inc.

4400 Campus Drive
Newport Beach
CA 92660

Newport Beach
tel 949.752.1612
fax 949.752.5321

Palm Springs
tel 760.323.5090

REGISTERED PROFESSIONAL ENGINEER
MIKE HOUSHMAND
No. C042283
Exp. 3/31/20
CIVIL
STATE OF CALIFORNIA

DATE SIGNED: 4/23/18

RESTRICTIVE NOTICE

THESE DESIGNS, DRAWINGS, AND SPECIFICATIONS ARE THE EXCLUSIVE PROPERTY OF GOUVIS ENGINEERING CONSULTING GROUP, AND ALL INFORMATION SHOWN IS CONFIDENTIAL TO ALL RECIPIENTS AND NO PART OF THESE DRAWINGS CAN BE COPIED, TRANSFERRED, OR REPRODUCED, NOR CAN ANY STRUCTURES BE BUILT FROM THEM WITHOUT WRITTEN CONSENT OF GOUVIS ENGINEERING CONSULTING GROUP

COPYRIGHT GOUVIS ENGINEERING CONSULTING GROUP 2008 ALL RIGHTS RESERVED

PROJECT:
The Colony
65

NOT FOR BID OR CONSTRUCTION

DEVELOPER:

ARCHITECT:
KPI

LOCATION:
Lancaster,
Los Angeles,
CA

REVISIONS

NO.	DATE	DESCRIPTION

SHEET NAME:
PARTIAL FRAMING PLAN
PLAN 1C&D

PROJECT NUMBER:
64797

ENGINEER: TH
DRAFTER: TH

ISSUED DATE:	PLOT DATE:
03/19/2018	04/23/2018

SHEET NUMBER:
S-1.3

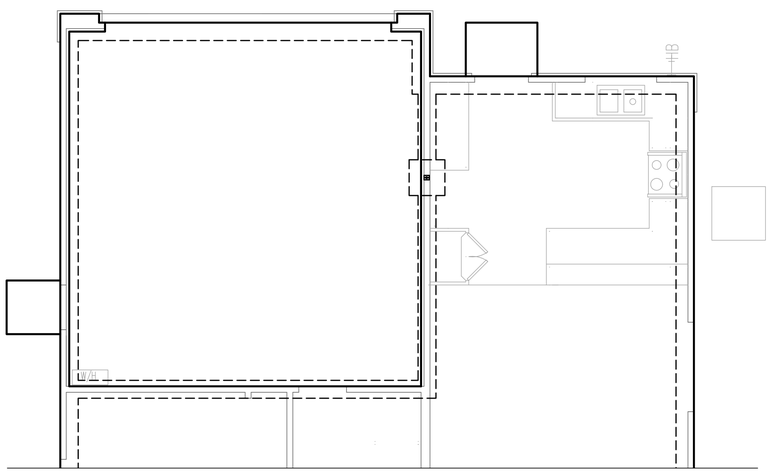

PARTIAL FOUNDATION PLAN
PLAN 2C

ALL INFORMATION FROM BASIC PLAN APPLIES TO ALTERNATE ELEVATION (U.N.O.)

SCALE : 1/4" = 1'-0"

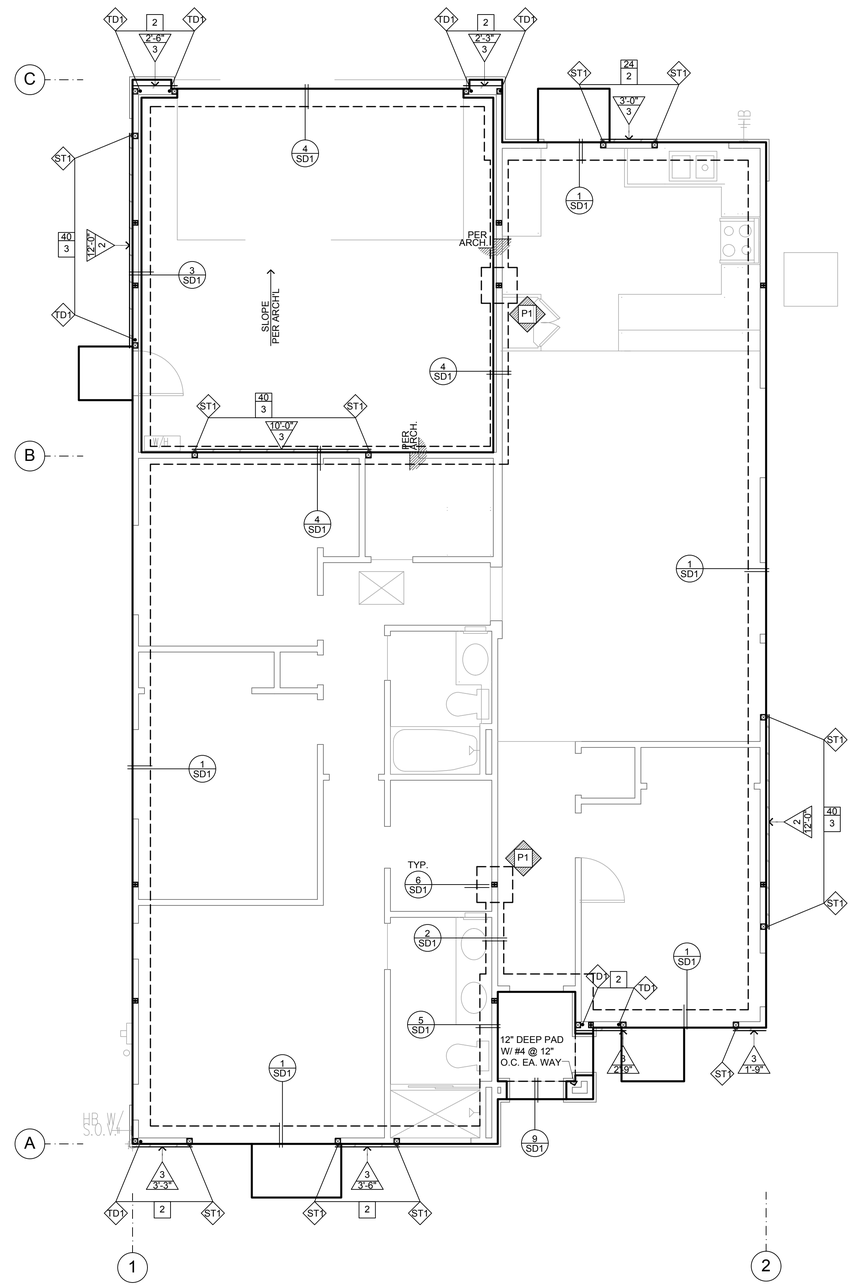

FOUNDATION PLAN
PLAN 2A, B, D

SCALE : 1/4" = 1'-0"

SYMBOLS LEGEND

- FOOTING
- DROP IN SLAB (VERIFY PRIOR TO CONSTRUCTION)
- REBAR
- PAD NUMBER
- SHEAR PANEL LENGTH AND NUMBER. REFER TO SN-1 FOR PANEL TYPE, MIN. 2-2x4 @ EA. END.
- DETAIL NUMBER / DETAIL SHEET NUMBER
- HOLDOWN NUMBER
- MAXIMUM SPACING\ / TOTAL MINIMUM NUMBER OF ANCHOR BOLTS EQUALLY SPACED AS POSSIBLE. SEE GENERAL NOTES ON SN-1 SHEET(S) FOR OTHER REQUIREMENTS. FOR NON-SHEAR WALLS, MASA/MASAP MUDSILL ANCHORS CAN BE USED IN LIEU OF ANCHOR BOLTS, ON A ONE TO ONE BASIS, WITH END DISTANCE OF 4" MIN. PER ESR #2555.

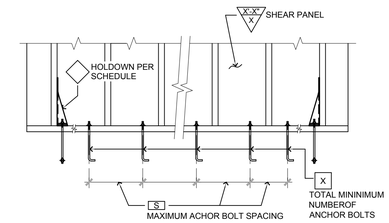

PAD SCHEDULE

SYM.	PAD TYPE
P1	2'-0" SQ. X 12" DEEP PAD W/ (3) #4 E.W.
P2	2'-6" SQ. X 12" DEEP PAD W/ (4) #4 E.W.
P3	3'-0" SQ. X 12" DEEP PAD W/ (4) #4 E.W.
P4	3'-6" SQ. X 12" DEEP PAD W/ (5) #4 E.W.
P5	4'-0" SQ. X 12" DEEP PAD W/ (6) #4 E.W.
P6	4'-6" SQ. X 12" DEEP PAD W/ (6) #4 E.W.
P7	5'-0" SQ. X 18" DEEP PAD W/ (7) #5 E.W.
P8	5'-6" SQ. X 18" DEEP PAD W/ (7) #5 E.W.

HOLDOWN SCHEDULE

SYM.	HOLDOWNS	MIN. POST SIZE (U.N.O. ON PLAN)	BOLT TYPES	CONC PAD SIZES FOR PAB BOLTS
ST1	STHD10	2-2 x 4 OR 4 x 4		
ST2	STHD14	2-2 x 4 OR 4 x 4		
ST3	STHD10RJ	2-2 x 4 OR 4 x 4		
ST4	STHD14RJ	2-2 x 4 OR 4 x 4		
TD1	HTT5	2-2 x 4 OR 4 x 4	SSTB24 OR PAB5	1'-6" SQ. x 12" DEEP
TD2	HDU8	4 x 4	SSTB28 OR PAB7	2'-3" SQ. x 15" DEEP
TD3	HDQ8	4 x 4	SSTB28 OR PAB7	2'-3" SQ. x 15" DEEP
TD4	HDU11	4 x 6	PAB8	2'-9" SQ. x 16" DEEP
TD5	HDU14	4 x 8	PAB8	2'-9" SQ. x 16" DEEP
TD6	HHDQ11	4 x 6	PAB8	2'-9" SQ. x 16" DEEP
TD7	HHDQ14	4 x 8	PAB8	2'-9" SQ. x 16" DEEP
TD8	HD12	4 x 6	PAB9	3'-2" SQ. x 18" DEEP
TD9	HD19	6 x 6	PAB10	3'-8" SQ. x 20" DEEP

NOTE: REFER TO 16/SD1 FOR TD HOLDOWNS AND 17/SD1 FOR ST HOLDOWNS.

FOUNDATION NOTES

1. REFER TO SN-1 SHEET FOR MORE INFO.
2. FOR SHEAR PANEL TYPE X-X/3, X-X/4 & X-X/5 ON BOTH SIDES OF WALL, USE MIN. 3X6 SILL PLATES U.N.O.

GOUVIS engineering
consulting group, inc.
4400 Campus Drive
Newport Beach
CA 92660

Newport Beach
tel 949.752.1612
fax 949.752.5321

Palm Springs
tel 760.323.5090

REGISTERED PROFESSIONAL ENGINEER MICHAEL HOUSHMAND No. C042283 Exp. 3/31/20 CIVIL STATE OF CALIFORNIA

DATE SIGNED: 4/23/18

RESTRICTIVE NOTICE

THESE DESIGNS, DRAWINGS, AND SPECIFICATIONS ARE THE EXCLUSIVE PROPERTY OF GOUVIS ENGINEERING CONSULTING GROUP, AND ALL INFORMATION SHOWN IS CONFIDENTIAL TO ALL RECIPIENTS AND NO PART OF THESE DRAWINGS CAN BE COPIED, TRANSFERRED, OR REPRODUCED, NOR CAN ANY STRUCTURES BE BUILT FROM THEM WITHOUT WRITTEN CONSENT OF GOUVIS ENGINEERING CONSULTING GROUP

COPYRIGHT GOUVIS ENGINEERING CONSULTING GROUP 2008 ALL RIGHTS RESERVED

PROJECT:
The Colony
65

NOT FOR BID OR CONSTRUCTION

DEVELOPER:

ARCHITECT:
KPI

LOCATION:
Lancaster,
Los Angeles,
CA

REVISIONS

NO.	DATE	DESCRIPTION

SHEET NAME:
FOUNDATION PLAN
PLAN 2

PROJECT NUMBER:
64797

ENGINEER: HT
DRAFTER: HT

ISSUED DATE: 03/19/2018
PLOT DATE: 04/23/2018

SHEET NUMBER:
S-2.1

STUD AND TRIMMER SCHEDULE

24	2X4 STUD	226	2-2X6 STUD	14T	2X4 TRIMMER	26T	2-2X6 TRIMMER
26	2X6 STUD	324	3-2X4 STUD	16T	2X6 TRIMMER	34T	3-2X4 TRIMMER
224	2-2X4 STUD	326	3-2X6 STUD	24T	2-2X4 TRIMMER	36T	3-2X6 TRIMMER

POST AND TRIMMER SCHEDULE

44	4X4 POST	412	4X12 POST	44T	4X4 TRIMMER	42T	4X12 TRIMMER
46	4X6 POST	66	6X6 POST	46T	4X6 TRIMMER	66T	6X6 TRIMMER
48	4X8 POST	68	6X8 POST	48T	4X8 TRIMMER	68T	6X8 TRIMMER
410	4X10 POST	88	8X8 POST	41T	4X10 TRIMMER	88T	8X8 TRIMMER

SYMBOLS LEGEND

- POST OR TRIMMER AS NOTED
- DIRECTION OF ROOF MEMBER PER SCHEDULE, REFER TO HATCHED WALLS ON PLANS FOR INTERMEDIATE BR'G
- DIRECTION OF FLOOR MEMBER PER SCHEDULE, REFER TO HATCHED WALLS ON PLANS FOR INTERMEDIATE BR'G
- DIRECTION OF DECK MEMBER PER SCHEDULE, REFER TO HATCHED WALLS ON PLANS FOR INTERMEDIATE BR'G
- X-X" / X — SHEAR PANEL LENGTH AND NUMBER, REFER TO SN-1 FOR PANEL TYPE, MIN. 2-2x4 @ EA. END.
- X / SDX — DETAIL NUMBER / DETAIL SHEET NUMBER
- X — BEAM NUMBER, REFER TO GOUVIS ENGINEERING CALCULATIONS
- X — KEY NOTE NUMBER
- BEARING WALL
- CALIFORNIA FRAMING

KEY NOTES

1. CONTINUOUS TIMBERSTRAND OR SPLICE PER PLAN.
2. ALIGN STUD(S) / POST(S) WITH UPPER FLOOR STUD(S) / POST(S) AND PROVIDE SOLID BLOCKING BETWEEN FLOOR (PROVIDE E.N. WHEN POST IS LOCATED WITHIN S.W.)
3. CONTINUOUS JOIST W/ E.N.
4. DRAG STRUT W/E.N.. SEE PLANS/DETAILS FOR LENGTH. SUPPORT END W/ BLK'G
5. LINE OF 2X FLAT BLOCKING W/ EDGE NAIL. & CONTINUOUS CS16 STRAP OVER U.N.O. SEE PLAN FOR NUMBER OF BAYS.
6. CONTINUOUS FULL HT. BLKG. W/E.N. SEE PLANS FOR NUMBER OF BAYS (U.N.O.)
7. CONTINUOUS LINE OF BLOCKING W/ EDGE NAIL UNDER SHEAR WALL ABOVE W/ (1) CS16, U.N.O.
8. BLOCKED ROOF DIAPHRAGM W/ 8d's @ 4" O.C. B.N., 6" O.C. E.N. & 12" O.C. FIELD.
9. BLOCKED FLOOR DIAPHRAGM W/ 10d's @ 4" O.C. B.N., 6" O.C. E.N. & 12" O.C. FIELD.
10. SHEAR TRUSS W/E.N. TRUSS TO TRANSFER 180 PLF MIN. (U.N.O.)
11. TRUSS HANGER BY TRUSS SUPPLIER
12. (1) SIMPSON TS22 FLUSH BEAM TO DROP BEAM (U.N.O.)
13. PROVIDE SOLID BLOCKING
14. DRAG TRUSS W/E.N. TRUSS TO TRANSFER 1650# FORCE MIN. (U.N.O.)
15. BLOCKED OPENING SEE DETAIL 15/SD2

FRAMING SCHEDULE

1. DESIGNED ROOF TRUSSES @ 24" O.C.
2. 14" TJI 210 I-JOISTS (OR EQUAL) @ 19.2" O.C.
3. 14" TJI 210 I-JOISTS (OR EQUAL) @ 16" O.C.
4. 14" TJI 360 I-JOISTS (OR EQUAL) @ 16" O.C.
5. 14" TJI 560 I-JOISTS (OR EQUAL) @ 16" O.C.
6. 2 X 12 DECK JOISTS @ 16" O.C.
7. 2 X 10 ROOF JOISTS / RAFTERS @ 16" O.C.
8. 2 X 8 ROOF JOISTS / RAFTERS @ 16" O.C.
9. 2 X 6 ROOF RAFTERS @ 16" O.C.
10. -

MANUFACTURER		I LEVEL BY WEYERHAEUSER	LOUISIANA PACIFIC	BOISE CASCADE	ROSEBURG
ICC-ES REPORT		ESR-1153	ESR-1305	ESR-1336	ESR-1251
DEPTH	11 7/8"	TJI 210	LPI 36	BCI 6000-1.7	RFPI-400
		TJI 360	LPI 56	BCI 60-2.0	RFPI-70
		TJI 560	N/A	BCI 90-2.0	RFPI-90
	14" & 16"	TJI 210	LPI 32 PLUS	BCI 6000-1.8	RFPI-400
		TJI 360	LPI 56	BCI 60-2.0	RFPI-70
		TJI 560	N/A	N/A	RFPI-90

FRAMING NOTES

1. REFER TO STRUCTURAL GENERAL NOTES AND DETAIL SHEETS (SN-1 & SN-2) FOR MORE INFORMATION.
2. REFER TO DETAIL 3/SN2 FOR TYPICAL CONNECTION AT ALL INTERIOR NON-BEARING WALLS AT ROOF LEVEL.
3. SHEAR WALLS CANNOT BE USED AS PLUMBING WALLS, UNLESS APPROVED BY GOUVIS ENGINEERING CONSULTING GROUP IN WRITING.
4. AT DOUBLE SIDED SHEAR WALLS, POST W/E.N. PER PLAN TO RECEIVE E.N. FROM BOTH SIDES.
5. WHEN MULTIPLE STUDS ARE USED INSTEAD OF A SINGLE POST, PLYWOOD SHEAR WALL TO BE NAILED TO ALL STUDS RECEIVING HOLDOWNS.
6. APPLY SHEAR PRIOR TO FRAMING OF PERPENDICULAR WALLS. DO NOT BREAK SHEAR AT PERPENDICULAR WALL LOCATIONS UNLESS SPECIFICALLY DETAILED ON PLANS.

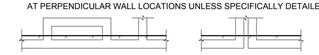

7. ALL VERTICAL PIPES THROUGH PLATES AND/OR SOLID RIM BEAMS MUST BE DRILLED CLEAN CUT W/ 1/16" TOLERANCE. DO NOT NOTCH OR CUT PLATES.
8. ALL BEAMS SHOWN ARE DROP (U.N.O.) ON PLANS.
9. AS AN ALTERNATE TO USING SIMPSON PRODUCTS OTHER CONNECTORS CAN BE USED, AS LONG AS THEIR CAPACITIES ARE EQUAL TO OR BETTER THAN SIMPSON'S, AND SUBJECTED TO THE APPROVAL OF GOUVIS ENGINERING.
10. USE SIMPSON " IUS/ITS/U310 " HANGERS FOR CONNECTION OF I-JOISTS TO OTHER FRAMING MEMBERS (U.N.O.) AND " LUS " HANGERS FOR CONNECTION OF SOLID JOISTS.
11. ALL WOOD I-JOISTS SHALL BE IN COMPLIANCE WITH THE PROVISIONS OF APA PRI-400, EWS-Z725B (PERFORMANCE RATED I-JOIST STANDARD) OR ASTM D5055. QUALIFIED PRI-400, MANUFACTURED. I-JOIST CAN BE ANY OF THOSE LISTED IN THE TABLE ABOVE.
12. THE FOLLOWING BEAMS/HEADERS/RIMS CAN BE FROM ANY MANUFACTURER WITH CURRENT APPROVED ICC ES - EVALUATION REPORT WITH THE FOLLOWING MECHANICAL PROPERTIES:
    FOR "LVL" & "PSL" BEAMS:
    Fb = 2900 psi (MIN), Fv = 290 psi (MIN), E = 2.0 x 10^6 psi (MIN).
    FOR "LSL" BEAMS/HEADERS:
    Fb = 2325 psi (MIN), Fv = 400 psi (MIN), E = 1.55 x 10^6 psi (MIN).
    FOR MANUFACTURED RIM BOARD WITH MIN 1 1/4" THICK, CONTINUOUSLY SUPPORTED BY WALL, AND MATCHES JOIST DEPTH:
    Fc ⊥ (PERPENDICULAR)..... = 680 psi (MIN)
    Fc // (PARALLEL)..... = 1400 psi (MIN)
    Ft = 1075 psi (MIN), E = 1.3 x 10^6 psi (MIN)
    GLU-LAM BEAM SHALL BE 24F-V4, DF/DF
    Fb = 2400 psi @ BOTTOM, Fb = 1850 psi @ TOP
    Fv = 265 psi (MIN), E = 1.8 x 10^6 psi (MIN).
13. A 4x6 (ALT. 2-2x6) HDR. SHOULD BE USED AT ALL OPENINGS IN EXTERIOR & INTERIOR BEARING WALLS U.N.O. ON PLANS. REFER TO THE FOLLOWING TABLE FOR OTHER COMMON HEADER SIZES.

PLAN DESIGNATION	HEADER SIZE	ALT. HEADER SIZE *
H1	4 x 4	2 - 2 x 4
H2	4 x 8	2 - 2 x 8

* 2-2 x SHALL BE PLACED ON END W/ 1/2" PLYWOOD SHIM BETWEEN. PROVIDE 16d NAILS @ 16" O.C., STAGG., BOTH SIDES.

14. THE FOLLOWING TRIMMER SCHEDULE SHOULD BE USED FOR HEADERS IN BEARING WALLS, U.N.O. ON THE PLAN. REQUIRED TRIMMER MUST BE APPLIED @ EACH END OF HEADER.

CLEAR SPAN, L		
L ≤ 6'-0"	6'-0" < L ≤ 10'-0"	L ≥ 10'-0"
2 x 4	2-2 x 4	SEE PLAN

15. FLOOR TO FLOOR HOLDOWN (X) APPLY DETAIL AT EACH END OF SHEAR WALL PER PLAN. (2) LOCATIONS PER WALL AS SHOWN BELOW. SEE TABLE FOR TYPE & DETAIL REFFERENCE. MIN. POST SIZE IS NOTED IN THE DETAIL

PER PLAN	REFERENCE & APPLY DETAIL	PER PLAN	REFERENCE & APPLY DETAIL	PER PLAN	REFERENCE & APPLY DETAIL
A	1A / SD-3	D	1D / SD-3	G	1G / SD-3
B	1B / SD-3	E	1E / SD-3		- -
C	1C / SD-3	F	1F / SD-3		- -

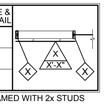

16. INTERIOR NON-BEARING & NON-SHEAR WALLS MAY BE FRAMED WITH 2x STUDS AT 24" O.C., MAX.
17. TOP PLATES AT ALL ROOF FRAMING LEVELS SHOULD BE SPLICED PER 9A/SD2 U.N.O. ON PLANS.
18. CONTINUOUS 1 ¼" LSL RIM JOISTS SHOULD BE USED AT ALL FLOOR FRAMING EDGES WHERE POSSIBLE. ALL RIM BREAKS SHOULD BE SPLICED WITH A SINGLE CS16 X36" STRAP, PER 4A/SD2 U.NO. ON PLANS.

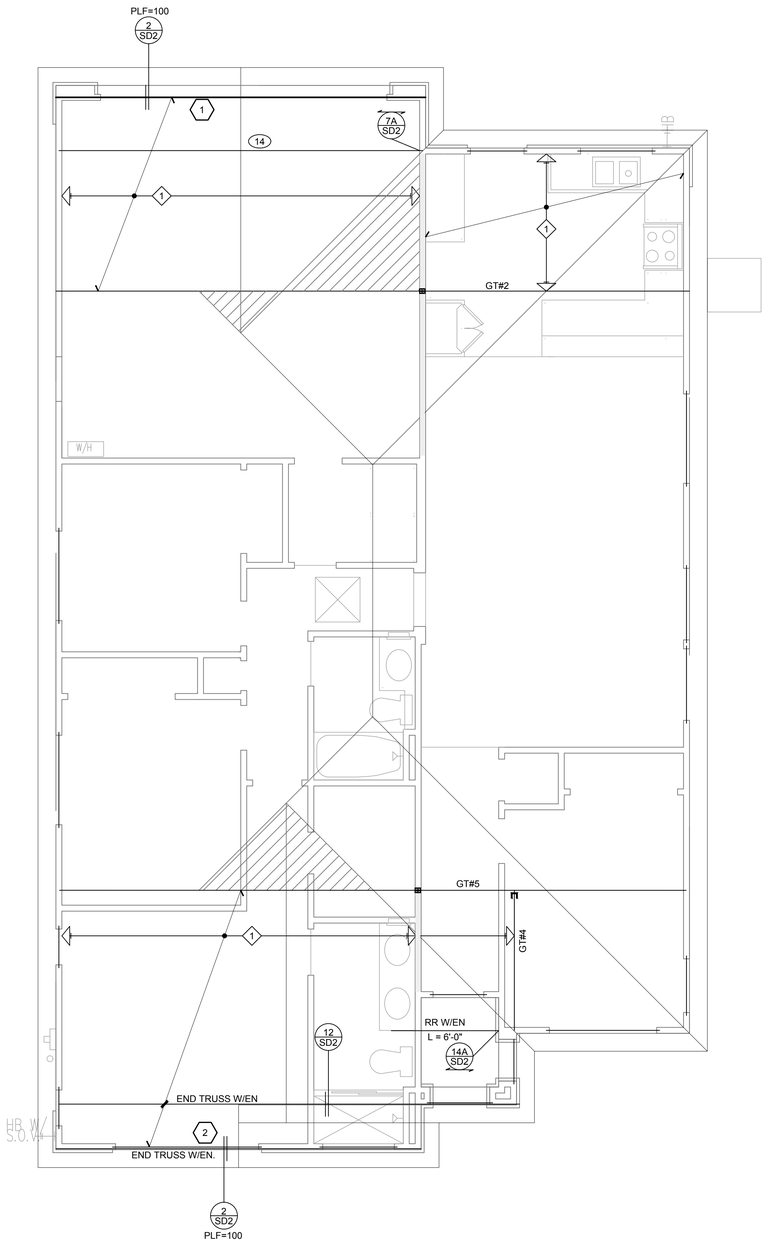

PARTIAL FRAMING PLAN
PLAN 2B

ALL INFORMATION FROM BASIC PLAN APPLIES TO ALTERNATE ELEVATION (U.N.O.)

SCALE : 1/4" = 1'-0"

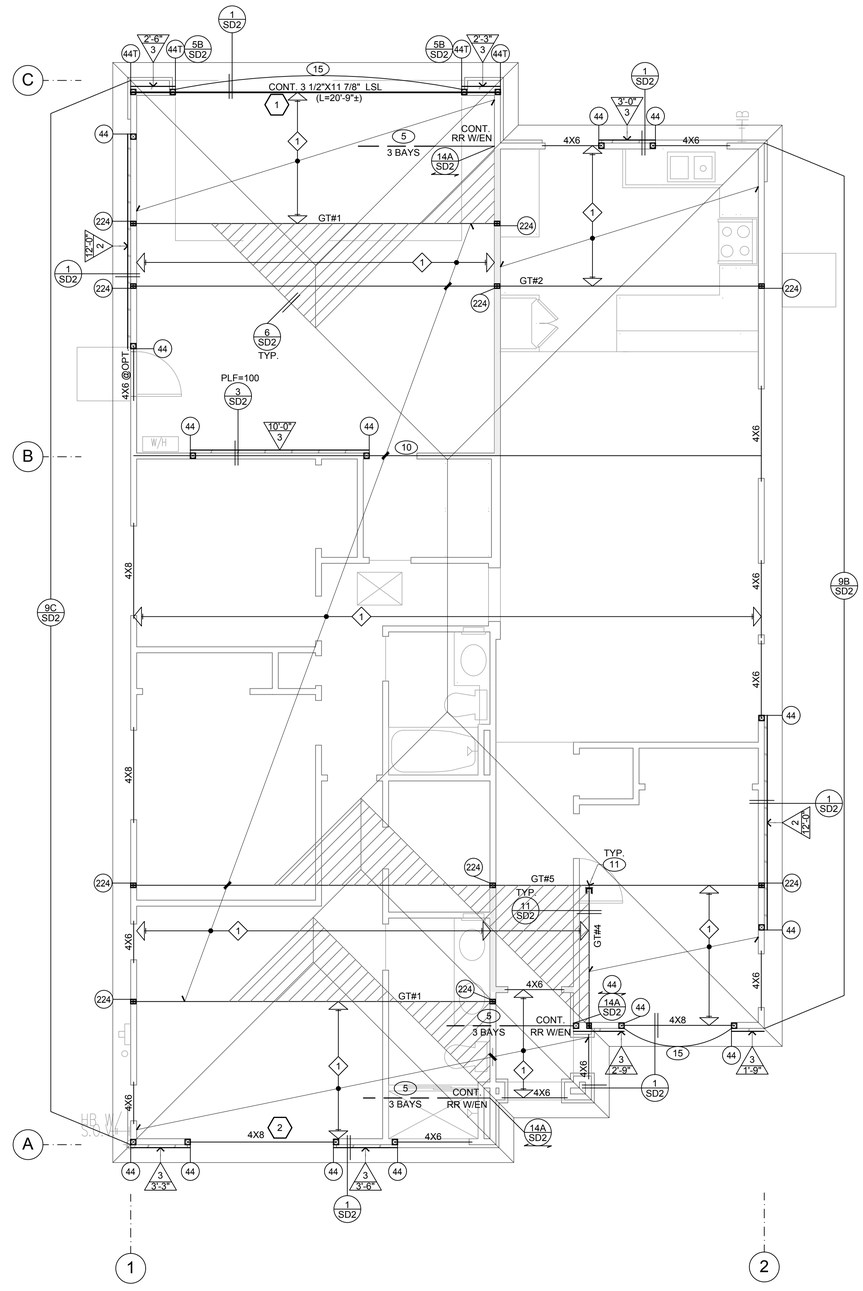

FRAMING PLAN
PLAN 2A

SCALE : 1/4" = 1'-0"

GOUVIS engineering consulting group, inc.

4400 Campus Drive
Newport Beach
CA 92660

Newport Beach
tel 949.752.1612
fax 949.752.5321

Palm Springs
tel 760.323.5090

REGISTERED PROFESSIONAL ENGINEER MIKE HOUSHMAND No. C042283 Exp. 3/31/20 CIVIL STATE OF CALIFORNIA

DATE SIGNED: 4/23/18

RESTRICTIVE NOTICE

THESE DESIGNS, DRAWINGS, AND SPECIFICATIONS ARE THE EXCLUSIVE PROPERTY OF GOUVIS ENGINEERING CONSULTING GROUP, AND ALL INFORMATION SHOWN IS CONFIDENTIAL TO ALL RECIPIENTS AND NO PART OF THESE DRAWINGS CAN BE COPIED, TRANSFERRED, OR REPRODUCED, NOR CAN ANY STRUCTURES BE BUILT FROM THEM WITHOUT WRITTEN CONSENT OF GOUVIS ENGINEERING CONSULTING GROUP

COPYRIGHT GOUVIS ENGINEERING CONSULTING GROUP 2008 ALL RIGHTS RESERVED

PROJECT:
The Colony
65

NOT FOR BID OR CONSTRUCTION

DEVELOPER:

ARCHITECT:
KPI

LOCATION:
Lancaster,
Los Angeles,
CA

REVISIONS

NO.	DATE	DESCRIPTION

SHEET NAME:
FRAMING PLAN
PLAN 2A & 2B

PROJECT NUMBER:
64797

ENGINEER: HT
DRAFTER: HT

ISSUED DATE: 03/19/2018
PLOT DATE: 04/23/2018

SHEET NUMBER:
S-2.2

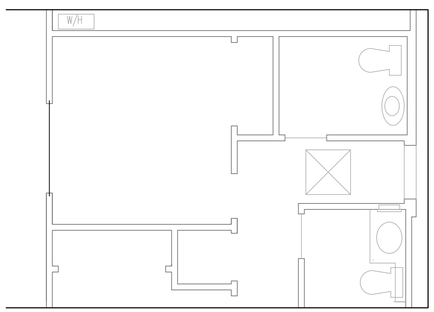

PARTIAL
FRAMING PLAN
OPT. POWDER

ALL INFORMATION FROM
BASIC PLAN APPLIES TO
OPTIONAL PLANS (U.N.O.)

SCALE : 1/4" = 1'-0"

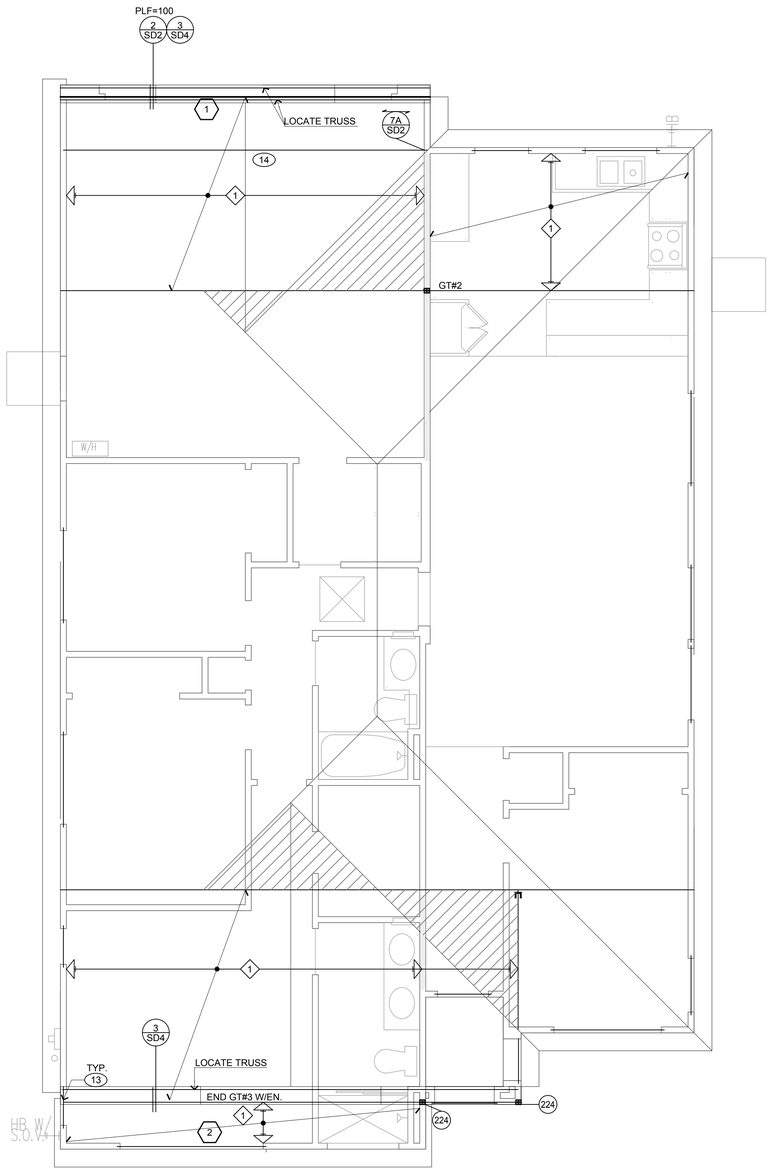

PARTIAL
FRAMING PLAN
PLAN 2D

ALL INFORMATION FROM
BASIC PLAN APPLIES TO
ALTERNATE ELEVATION (U.N.O.)

SCALE : 1/4" = 1'-0"

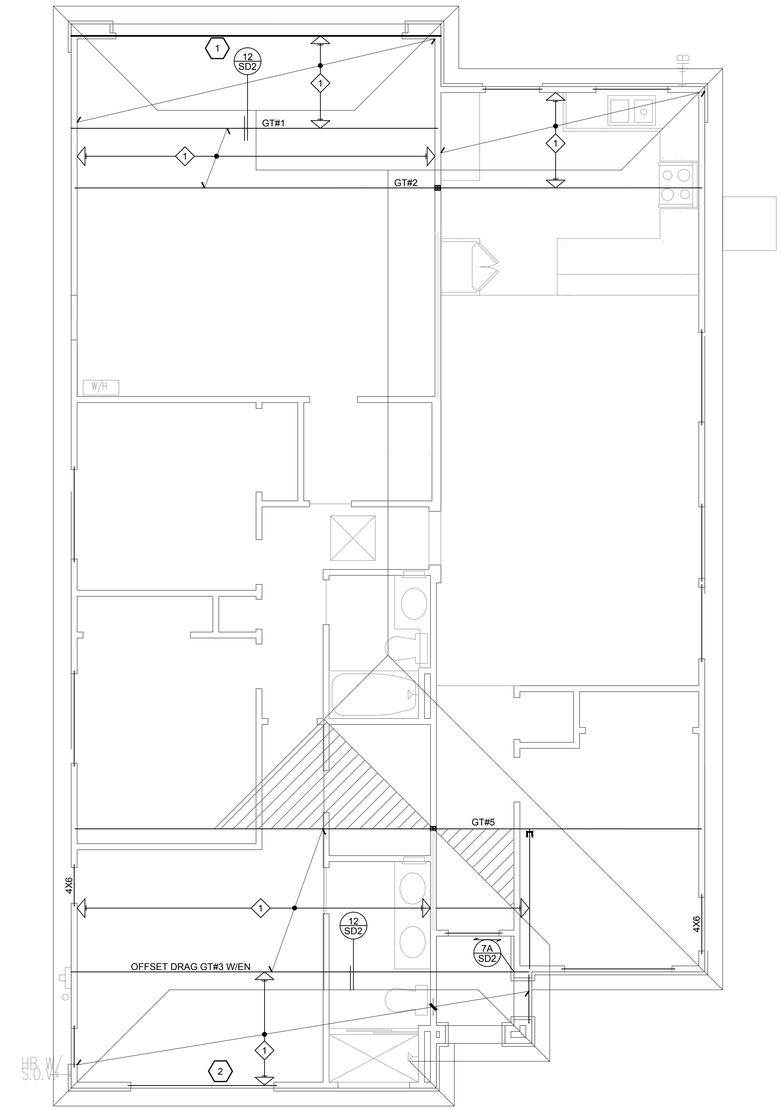

PARTIAL
FRAMING PLAN
PLAN 2C

ALL INFORMATION FROM
BASIC PLAN APPLIES TO
ALTERNATE ELEVATION (U.N.O.)

SCALE : 1/4" = 1'-0"

GOUVIS
engineering
consulting group, inc.

4400 Campus Drive
Newport Beach
CA 92660

Newport Beach
tel 949.752.1612
fax 949.752.5321

Palm Springs
tel 760.323.5090

REGISTERED PROFESSIONAL ENGINEER
MIKE HOUSHMAND
No. C042283
Exp. 3/31/20
CIVIL
STATE OF CALIFORNIA

DATE SIGNED: 4/23/18

RESTRICTIVE NOTICE

THESE DESIGNS, DRAWINGS, AND SPECIFICATIONS ARE THE EXCLUSIVE PROPERTY OF GOUVIS ENGINEERING CONSULTING GROUP, AND ALL INFORMATION SHOWN IS CONFIDENTIAL TO ALL RECIPIENTS AND NO PART OF THESE DRAWINGS CAN BE COPIED, TRANSFERRED, OR REPRODUCED, NOR CAN ANY STRUCTURES BE BUILT FROM THEM WITHOUT WRITTEN CONSENT OF GOUVIS ENGINEERING CONSULTING GROUP

COPYRIGHT GOUVIS ENGINEERING CONSULTING GROUP 2008 ALL RIGHTS RESERVED

PROJECT:
The Colony
65

NOT FOR BID OR CONSTRUCTION

DEVELOPER:

ARCHITECT:
KPI

LOCATION:
Lancaster,
Los Angeles,
CA

REVISIONS

NO.	DATE	DESCRIPTION

SHEET NAME:
PARTIAL
FRAMING PLAN
PLAN 2C, 2D & OPT.

PROJECT NUMBER:
64797

ENGINEER: HT
DRAFTER: HT

ISSUED DATE:	PLOT DATE:
03/19/2018	04/23/2018

SHEET NUMBER:
S-2.3

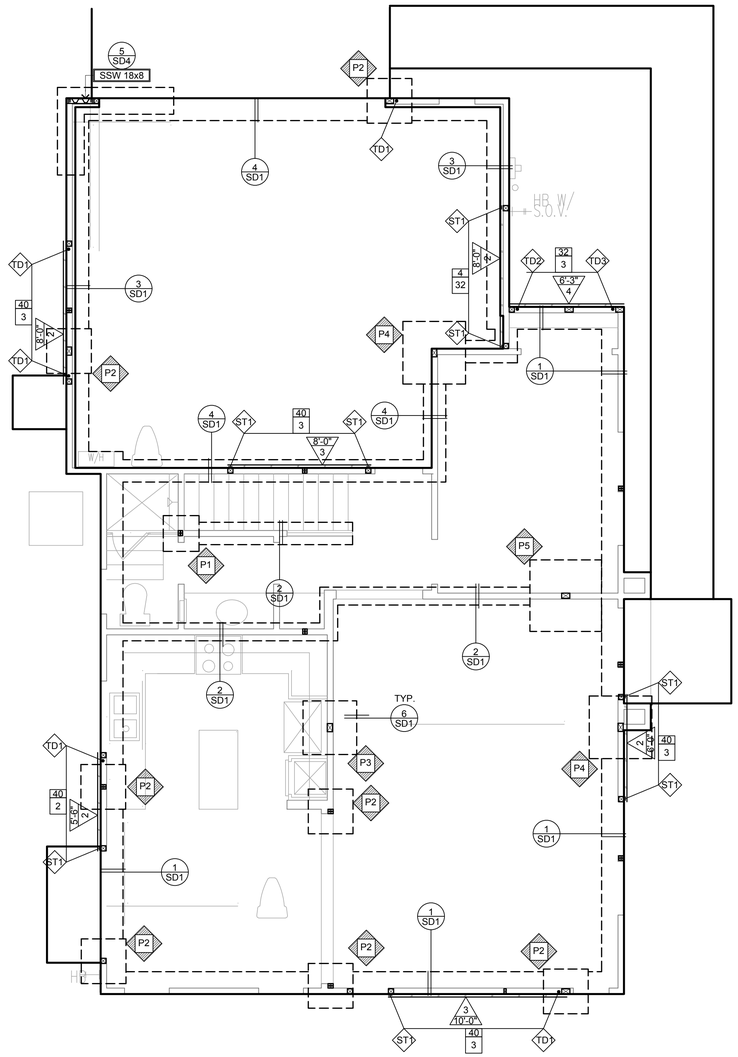

FOUNDATION PLAN
PLAN 3

SCALE : 1/4" = 1'-0"

SYMBOLS LEGEND

- FOOTING
- DROP IN SLAB (VERIFY PRIOR TO CONSTRUCTION)
- REBAR
- PX — PAD NUMBER
- X'-X" / X — SHEAR PANEL LENGTH AND NUMBER. REFER TO SN-1 FOR PANEL TYPE, MIN. 2-2x4 @ EA. END.
- X / SDX — DETAIL NUMBER / DETAIL SHEET NUMBER
- X — HOLDOWN NUMBER
- S — MAXIMUM SPACING\
- X — TOTAL MINIMUM NUMBER OF ANCHOR BOLTS EQUALLY SPACED AS POSSIBLE. SEE GENERAL NOTES ON SN-1 SHEET(S) FOR OTHER REQUIREMENTS. FOR NON-SHEAR WALLS, MASA/MASAP MUDSILL ANCHORS CAN BE USED IN LIEU OF ANCHOR BOLTS, ON A ONE TO ONE BASIS, WITH END DISTANCE OF 4" MIN. PER ESR #2555.

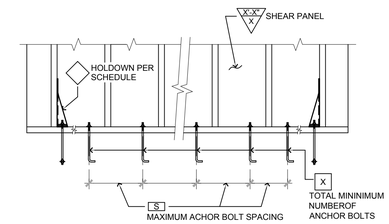

PAD SCHEDULE

SYM.	PAD TYPE
P1	2'-0" SQ. X 18" DEEP PAD W/ (4) #4 E.W.
P2	2'-6" SQ. X 18" DEEP PAD W/ (5) #4 E.W.
P3	3'-0" SQ. X 18" DEEP PAD W/ (6) #4 E.W.
P4	3'-6" SQ. X 18" DEEP PAD W/ (7) #4 E.W.
P5	4'-0" SQ. X 18" DEEP PAD W/ (8) #4 E.W.
P6	4'-6" SQ. X 18" DEEP PAD W/ (9) #4 E.W.
P7	5'-0" SQ. X 18" DEEP PAD W/ (10) #4 E.W.
P8	5'-6" SQ. X 18" DEEP PAD W/ (11) #4 E.W.

HOLDOWN SCHEDULE

SYM.	HOLDOWNS	MIN. POST SIZE (U.N.O. ON PLAN)	BOLT TYPES	CONC PAD SIZES FOR PAB BOLTS
ST1	STHD10	2-2 x 4 OR 4 x 4		
ST2	STHD14	2-2 x 4 OR 4 x 4		
ST3	STHD10RJ	2-2 x 4 OR 4 x 4		
ST4	STHD14RJ	2-2 x 4 OR 4 x 4		
TD1	HTT5	2-2 x 4 OR 4 x 4	SSTB24 OR PAB5	1'-6" SQ. x 12" DEEP
TD2	HDU8	4 x 4	SSTB28 OR PAB7	2'-3" SQ. x 15" DEEP
TD3	HDQ8	4 x 4	SSTB28 OR PAB7	2'-3" SQ. x 15" DEEP
TD4	HDU11	4 x 6	PAB8	2'-9" SQ. x 16" DEEP
TD5	HDU14	4 x 8	PAB8	2'-9" SQ. x 16" DEEP
TD6	HHDQ11	4 x 6	PAB8	2'-9" SQ. x 16" DEEP
TD7	HHDQ14	4 x 8	PAB8	2'-9" SQ. x 16" DEEP
TD8	HD12	4 x 6	PAB9	3'-2" SQ. x 18" DEEP
TD9	HD19	6 x 6	PAB10	3'-8" SQ. x 20" DEEP

NOTE: REFER TO 16/SD1 FOR TD HOLDOWNS AND 17/SD1 FOR ST HOLDOWNS.

FOUNDATION NOTES

1. REFER TO SN-1 SHEET FOR MORE INFO.
2. FOR SHEAR PANEL TYPE X'-X"/3, X'-X"/4 & X'-X"/5 ON BOTH SIDES OF WALL, USE MIN. 3X6 SILL PLATES U.N.O.

GOUVIS engineering
consulting group, inc.
4400 Campus Drive
Newport Beach
CA 92660

Newport Beach
tel 949.752.1612
fax 949.752.5321

Palm Springs
tel 760.323.5090

REGISTERED PROFESSIONAL ENGINEER
MIKE HOUSHMAND
No. C042283
Exp. 3/31/20
CIVIL
STATE OF CALIFORNIA

DATE SIGNED: 4/23/18

RESTRICTIVE NOTICE

THESE DESIGNS, DRAWINGS, AND SPECIFICATIONS ARE THE EXCLUSIVE PROPERTY OF GOUVIS ENGINEERING CONSULTING GROUP, AND ALL INFORMATION SHOWN IS CONFIDENTIAL TO ALL RECIPIENTS AND NO PART OF THESE DRAWINGS CAN BE COPIED, TRANSFERRED, OR REPRODUCED, NOR CAN ANY STRUCTURES BE BUILT FROM THEM WITHOUT WRITTEN CONSENT OF GOUVIS ENGINEERING CONSULTING GROUP

COPYRIGHT GOUVIS ENGINEERING CONSULTING GROUP 2008 ALL RIGHTS RESERVED

PROJECT:
The Colony
65

NOT FOR BID OR CONSTRUCTION

DEVELOPER:

ARCHITECT:
KPI

LOCATION:
Lancaster,
Los Angeles,
CA

REVISIONS

NO.	DATE	DESCRIPTION

SHEET NAME:
FOUNDATION PLAN
PLAN 3

PROJECT NUMBER:
64797

ENGINEER: H.V
DRAFTER: H.V

ISSUED DATE:	PLOT DATE:
03/19/2018	04/23/2018

SHEET NUMBER:
S-3.1

STUD AND TRIMMER SCHEDULE

24	2X4 STUD	226	2-2X6 STUD	14T	2X4 TRIMMER	26T	2-2X6 TRIMMER
26	2X6 STUD	324	3-2X4 STUD	16T	2X6 TRIMMER	34T	3-2X4 TRIMMER
224	2-2X4 STUD	326	3-2X6 STUD	24T	2-2X4 TRIMMER	36T	3-2X6 TRIMMER

POST AND TRIMMER SCHEDULE

44	4X4 POST	412	4X12 POST	44T	4X4 TRIMMER	42T	4X12 TRIMMER
46	4X6 POST	66	6X6 POST	46T	4X6 TRIMMER	66T	6X6 TRIMMER
48	4X8 POST	68	6X8 POST	48T	4X8 TRIMMER	68T	6X8 TRIMMER
410	4X10 POST	88	8X8 POST	41T	4X10 TRIMMER	88T	8X8 TRIMMER

SYMBOLS LEGEND

- POST OR TRIMMER AS NOTED
- DIRECTION OF ROOF MEMBER PER SCHEDULE, REFER TO HATCHED WALLS ON PLANS FOR INTERMEDIATE BR'G
- DIRECTION OF FLOOR MEMBER PER SCHEDULE, REFER TO HATCHED WALLS ON PLANS FOR INTERMEDIATE BR'G
- DIRECTION OF DECK MEMBER PER SCHEDULE, REFER TO HATCHED WALLS ON PLANS FOR INTERMEDIATE BR'G
- X-X" / X — SHEAR PANEL LENGTH AND NUMBER, REFER TO SN-1 FOR PANEL TYPE, MIN. 2-2x4 @ EA. END.
- X / SDX — DETAIL NUMBER / DETAIL SHEET NUMBER
- X — BEAM NUMBER, REFER TO GOUVIS ENGINEERING CALCULATIONS
- X — KEY NOTE NUMBER
- BEARING WALL
- CALIFORNIA FRAMING

KEY NOTES

1. CONTINUOUS TIMBERSTRAND OR SPLICE PER PLAN. ALIGN STUD(S) / POST(S) WITH UPPER FLOOR STUD(S) / POST(S) AND PROVIDE SOLID BLOCKING BETWEEN FLOOR (PROVIDE E.N. WHEN POST IS LOCATED WITHIN S.W.)
2. CONTINUOUS JOIST W/ E.N.
3. DRAG STRUT W/E.N.. SEE PLANS/DETAILS FOR LENGTH. SUPPORT END W/ BLK'G
4. LINE OF 2X FLAT BLOCKING W/ EDGE NAIL. & CONTINUOUS CS16 STRAP OVER U.N.O. SEE PLAN FOR NUMBER OF BAYS.
5. CONTINUOUS FULL HT. BLKG. W/E.N. SEE PLANS FOR NUMBER OF BAYS (U.N.O.)
6. CONTINUOUS LINE OF BLOCKING W/ EDGE NAIL UNDER SHEAR WALL ABOVE W/ (1) CS16, U.N.O.
7. BLOCKED ROOF DIAPHRAGM W/ 8d's @ 4" O.C. B.N., 6" O.C. E.N. & 12" O.C. FIELD.
8. BLOCKED FLOOR DIAPHRAGM W/ 10d's @ 4" O.C. B.N., 6" O.C. E.N. & 12" O.C. FIELD.
9. SHEAR TRUSS W/E.N. TRUSS TO TRANSFER 180 PLF MIN. (U.N.O.)
10. TRUSS HANGER BY TRUSS SUPPLIER
11. (1) SIMPSON TS22 FLUSH BEAM TO DROP BEAM (U.N.O.)
12. PROVIDE SOLID BLOCKING
13. DRAG TRUSS W/E.N. TRUSS TO TRANSFER 1650# FORCE MIN. (U.N.O.)
14. BLOCKED OPENING SEE DETAIL 15/SD2

FRAMING SCHEDULE

1. DESIGNED ROOF TRUSSES @ 24" O.C.
2. 14" TJI 210 I-JOISTS (OR EQUAL) @ 19.2" O.C.
3. 14" TJI 210 I-JOISTS (OR EQUAL) @ 16" O.C.
4. 14" TJI 360 I-JOISTS (OR EQUAL) @ 16" O.C.
5. 14" TJI 560 I-JOISTS (OR EQUAL) @ 16" O.C.
6. 2 X 12 DECK JOISTS @ 16" O.C.
7. 2 X 10 ROOF JOISTS / RAFTERS @ 16" O.C.
8. 2 X 8 ROOF JOISTS / RAFTERS @ 16" O.C.
9. 2 X 6 ROOF RAFTERS @ 16" O.C.
10. -

MANUFACTURER		I LEVEL BY WEYERHAEUSER	LOUISIANA PACIFIC	BOISE CASCADE	ROSEBURG
ICC-ES REPORT		ESR-1153	ESR-1305	ESR-1336	ESR-1251
DEPTH	11 7/8"	TJI 210	LPI 36	BCI 6000-1.7	RFPI-400
		TJI 360	LPI 56	BCI 60-2.0	RFPI-70
		TJI 560	N/A	BCI 90-2.0	RFPI-90
	14" & 16"	TJI 210	LPI 32 PLUS	BCI 6000-1.8	RFPI-400
		TJI 360	LPI 56	BCI 60-2.0	RFPI-70
		TJI 560	N/A	N/A	RFPI-90

FRAMING NOTES

1. REFER TO STRUCTURAL GENERAL NOTES AND DETAIL SHEETS (SN-1 & SN-2) FOR MORE INFORMATION.
2. REFER TO DETAIL 3/SN2 FOR TYPICAL CONNECTION AT ALL INTERIOR NON-BEARING WALLS AT ROOF LEVEL.
3. SHEAR WALLS CANNOT BE USED AS PLUMBING WALLS, UNLESS APPROVED BY GOUVIS ENGINEERING CONSULTING GROUP IN WRITING.
4. AT DOUBLE SIDED SHEAR WALLS, POST W/E.N. PER PLAN TO RECEIVE E.N. FROM BOTH SIDES.
5. WHEN MULTIPLE STUDS ARE USED INSTEAD OF A SINGLE POST, PLYWOOD SHEAR WALL TO BE NAILED TO ALL STUDS RECEIVING HOLDOWNS.
6. APPLY SHEAR PRIOR TO FRAMING OF PERPENDICULAR WALLS. DO NOT BREAK SHEAR AT PERPENDICULAR WALL LOCATIONS UNLESS SPECIFICALLY DETAILED ON PLANS.

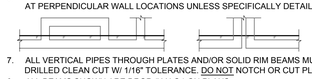

7. ALL VERTICAL PIPES THROUGH PLATES AND/OR SOLID RIM BEAMS MUST BE DRILLED CLEAN CUT W/ 1/16" TOLERANCE. DO NOT NOTCH OR CUT PLATES.
8. ALL BEAMS SHOWN ARE DROP (U.N.O.) ON PLANS.
9. AS AN ALTERNATE TO USING SIMPSON PRODUCTS OTHER CONNECTORS CAN BE USED, AS LONG AS THEIR CAPACITIES ARE EQUAL TO OR BETTER THAN SIMPSON'S, AND SUBJECTED TO THE APPROVAL OF GOUVIS ENGINERING.
10. USE SIMPSON " IUS/ITS/U310 " HANGERS FOR CONNECTION OF I-JOISTS TO OTHER FRAMING MEMBERS (U.N.O.) AND " LUS " HANGERS FOR CONNECTION OF SOLID JOISTS.
11. ALL WOOD I-JOISTS SHALL BE IN COMPLIANCE WITH THE PROVISIONS OF APA PRI-400, EWS-Z725B (PERFORMANCE RATED I-JOIST STANDARD) OR ASTM D5055. QUALIFIED PRI-400, MANUFACTURED. I-JOIST CAN BE ANY OF THOSE LISTED IN THE TABLE ABOVE.
12. THE FOLLOWING BEAMS/HEADERS/RIMS CAN BE FROM ANY MANUFACTURER WITH CURRENT APPROVED ICC ES - EVALUATION REPORT WITH THE FOLLOWING MECHANICAL PROPERTIES:
    FOR "LVL" & "PSL" BEAMS:
    Fb = 2900 psi (MIN), Fv = 290 psi (MIN), E = 2.0 x 10^6 psi (MIN).
    FOR "LSL" BEAMS/HEADERS:
    Fb = 2325 psi (MIN), Fv = 400 psi (MIN), E = 1.55 x 10^6 psi (MIN).
    FOR MANUFACTURED RIM BOARD WITH MIN 1 1/4" THICK, CONTINUOUSLY SUPPORTED BY WALL, AND MATCHES JOIST DEPTH:
    Fc ⊥ (PERPENDICULAR)..... = 680 psi (MIN)
    Fc // (PARALLEL)..... = 1400 psi (MIN)
    Ft = 1075 psi (MIN), E = 1.3 x 10^6 psi (MIN)
    GLU-LAM BEAM SHALL BE 24F-V4, DF/DF
    Fb = 2400 psi @ BOTTOM, Fb = 1850 psi @ TOP
    Fv = 265 psi (MIN), E = 1.8 x 10^6 psi (MIN).
13. A 4x6 (ALT. 2-2x6) HDR. SHOULD BE USED AT ALL OPENINGS IN EXTERIOR & INTERIOR BEARING WALLS U.N.O. ON PLANS. REFER TO THE FOLLOWING TABLE FOR OTHER COMMON HEADER SIZES.

PLAN DESIGNATION	HEADER SIZE	ALT. HEADER SIZE *
H1	4 x 4	2 - 2 x 4
H2	4 x 8	2 - 2 x 8

* 2-2 x SHALL BE PLACED ON END W/ 1/2" PLYWOOD SHIM BETWEEN. PROVIDE 16d NAILS @ 16" O.C., STAGG., BOTH SIDES.

14. THE FOLLOWING TRIMMER SCHEDULE SHOULD BE USED FOR HEADERS IN BEARING WALLS, U.N.O. ON THE PLAN. REQUIRED TRIMMER MUST BE APPLIED @ EACH END OF HEADER.

CLEAR SPAN, L		
L ≤ 6'-0"	6'-0" < L ≤ 10'-0"	L ≥ 10'-0"
2 x 4	2-2 x 4	SEE PLAN

15. FLOOR TO FLOOR HOLDOWN (X) APPLY DETAIL AT EACH END OF SHEAR WALL PER PLAN. (2) LOCATIONS PER WALL AS SHOWN BELOW. SEE TABLE FOR TYPE & DETAIL REFFERENCE. MIN. POST SIZE IS NOTED IN THE DETAIL

PER PLAN	REFERENCE & APPLY DETAIL	PER PLAN	REFERENCE & APPLY DETAIL	PER PLAN	REFERENCE & APPLY DETAIL
A	1A / SD-3	D	1D / SD-3	G	1G / SD-3
B	1B / SD-3	E	1E / SD-3		- -
C	1C / SD-3	F	1F / SD-3		- -

16. INTERIOR NON-BEARING & NON-SHEAR WALLS MAY BE FRAMED WITH 2x STUDS AT 24" O.C., MAX.
17. TOP PLATES AT ALL ROOF FRAMING LEVELS SHOULD BE SPLICED PER 9A/SD2 U.N.O. ON PLANS.
18. CONTINUOUS 1 ¼" LSL RIM JOISTS SHOULD BE USED AT ALL FLOOR FRAMING EDGES WHERE POSSIBLE. ALL RIM BREAKS SHOULD BE SPLICED WITH A SINGLE CS16 X36" STRAP, PER 4A/SD2 U.NO. ON PLANS.

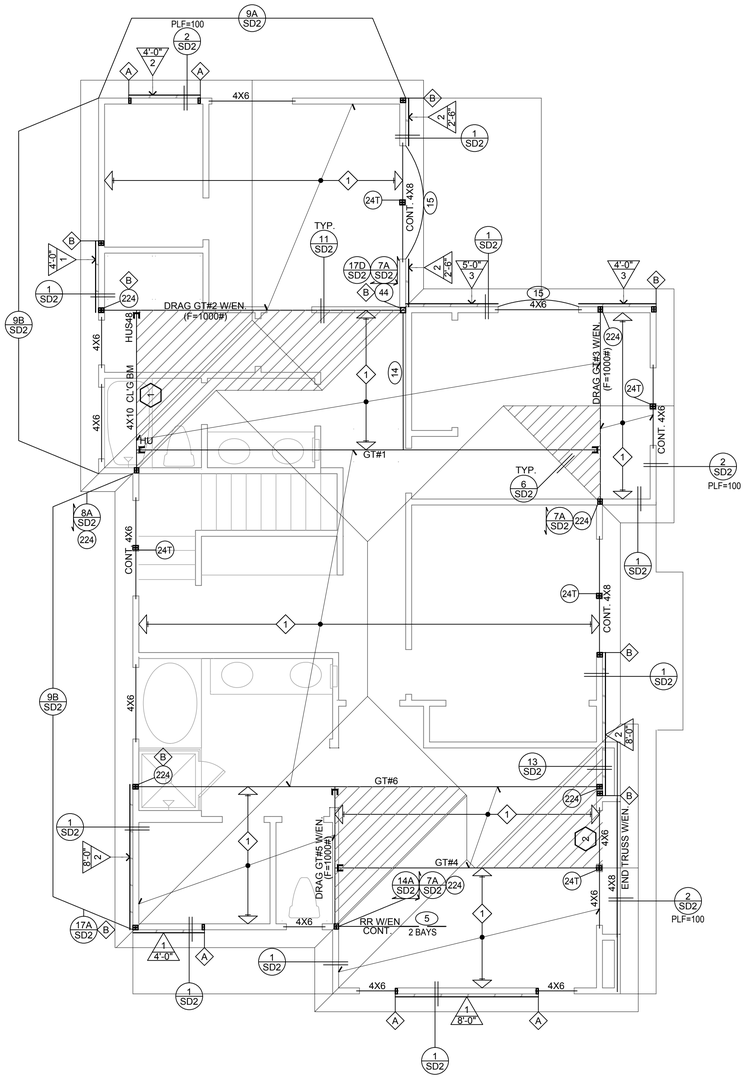

ROOF FRAMING PLAN
PLAN 3A

SCALE : 1/4" = 1'-0"

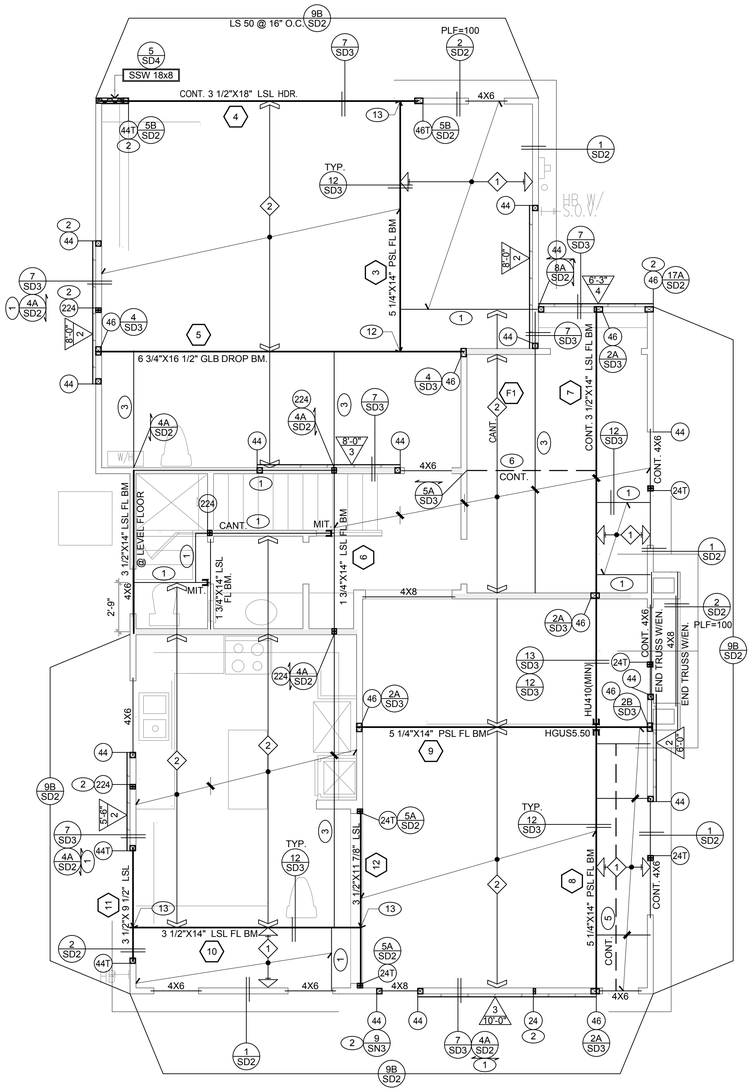

FLOOR FRAMING PLAN
PLAN 3A

SCALE : 1/4" = 1'-0"

GOUVIS engineering
consulting group, inc.
4400 Campus Drive
Newport Beach
CA 92660

Newport Beach
tel 949.752.1612
fax 949.752.5321

Palm Springs
tel 760.323.5090

REGISTERED PROFESSIONAL ENGINEER MIKE HOUSKAMP No. C042283 Exp. 3/31/20 CIVIL STATE OF CALIFORNIA

DATE SIGNED: 4/23/18

RESTRICTIVE NOTICE

THESE DESIGNS, DRAWINGS, AND SPECIFICATIONS ARE THE EXCLUSIVE PROPERTY OF GOUVIS ENGINEERING CONSULTING GROUP, AND ALL INFORMATION SHOWN IS CONFIDENTIAL TO ALL RECIPIENTS AND NO PART OF THESE DRAWINGS CAN BE COPIED, TRANSFERRED, OR REPRODUCED, NOR CAN ANY STRUCTURES BE BUILT FROM THEM WITHOUT WRITTEN CONSENT OF GOUVIS ENGINEERING CONSULTING GROUP

COPYRIGHT GOUVIS ENGINEERING CONSULTING GROUP 2008 ALL RIGHTS RESERVED

PROJECT:
The Colony
65

NOT FOR BID OR CONSTRUCTION

DEVELOPER:

ARCHITECT:
KPI

LOCATION:
Lancaster,
Los Angeles,
CA

REVISIONS

NO.	DATE	DESCRIPTION

SHEET NAME:
FRAMING PLAN
PLAN 3A

PROJECT NUMBER:
64797

ENGINEER: H.V
DRAFTER: H.V

ISSUED DATE:	PLOT DATE:
03/19/2018	04/23/2018

SHEET NUMBER:
S-3.2

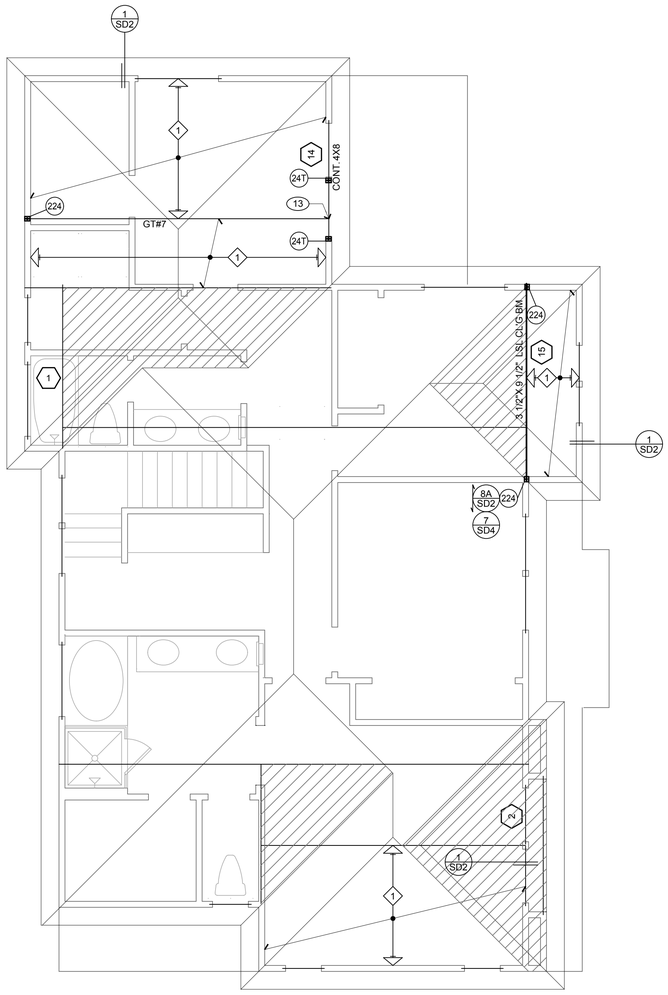

PARTIAL
ROOF FRAMING PLAN
PLAN 3B

ALL INFORMATION FROM BASIC PLAN APPLIES TO ALTERNATE ELEVATION (U.N.O.)

SCALE : 1/4" = 1'-0"

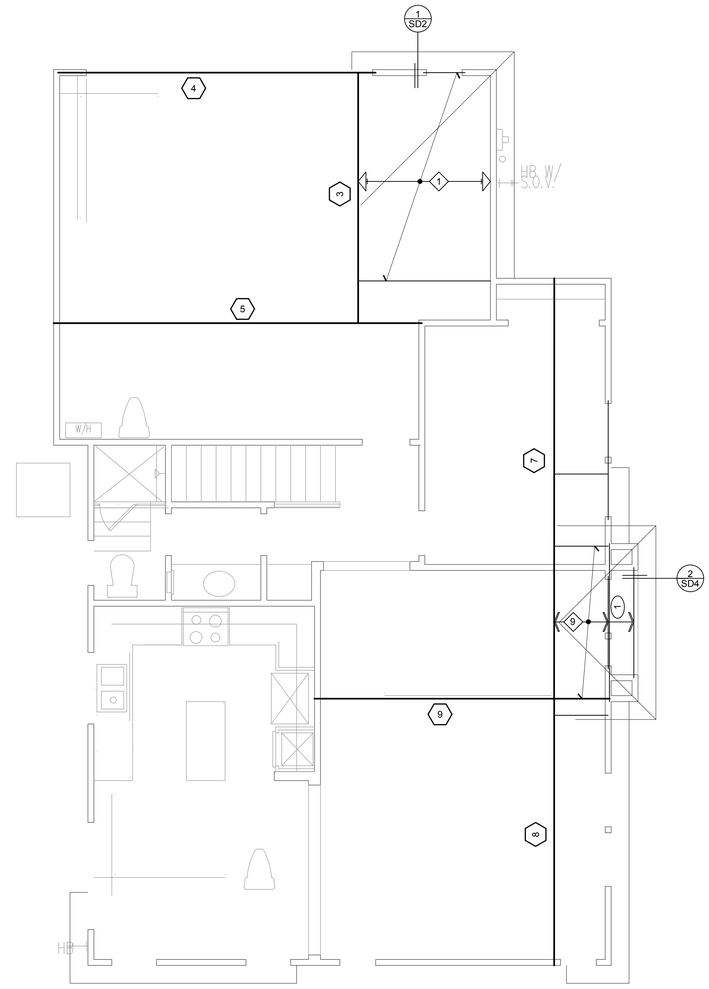

PARTIAL
FLOOR FRAMING PLAN
PLAN 3B

ALL INFORMATION FROM BASIC PLAN APPLIES TO ALTERNATE ELEVATION (U.N.O.)

SCALE : 1/4" = 1'-0"

GOUVIS engineering
consulting group, inc.

4400 Campus Drive
Newport Beach
CA 92660

Newport Beach
tel 949.752.1612
fax 949.752.5321

Palm Springs
tel 760.323.5090

REGISTERED PROFESSIONAL ENGINEER
MIKE HOUSHMAND
No. C042283
Exp. 3/31/20
CIVIL
STATE OF CALIFORNIA

DATE SIGNED: 4/23/18

RESTRICTIVE NOTICE

THESE DESIGNS, DRAWINGS, AND SPECIFICATIONS ARE THE EXCLUSIVE PROPERTY OF GOUVIS ENGINEERING CONSULTING GROUP, AND ALL INFORMATION SHOWN IS CONFIDENTIAL TO ALL RECIPIENTS AND NO PART OF THESE DRAWINGS CAN BE COPIED, TRANSFERRED, OR REPRODUCED, NOR CAN ANY STRUCTURES BE BUILT FROM THEM WITHOUT WRITTEN CONSENT OF GOUVIS ENGINEERING CONSULTING GROUP

COPYRIGHT GOUVIS ENGINEERING CONSULTING GROUP 2008 ALL RIGHTS RESERVED

PROJECT:
The Colony
65

NOT FOR BID OR CONSTRUCTION

DEVELOPER:

ARCHITECT:
KPI

LOCATION:
Lancaster,
Los Angeles,
CA

REVISIONS

NO.	DATE	DESCRIPTION

SHEET NAME:
PARTIAL FRAMING PLAN
PLAN 3B

PROJECT NUMBER:
64797

ENGINEER: H.V
DRAFTER: H.V

ISSUED DATE:	PLOT DATE:
03/19/2018	04/23/2018

SHEET NUMBER:
S-3.3

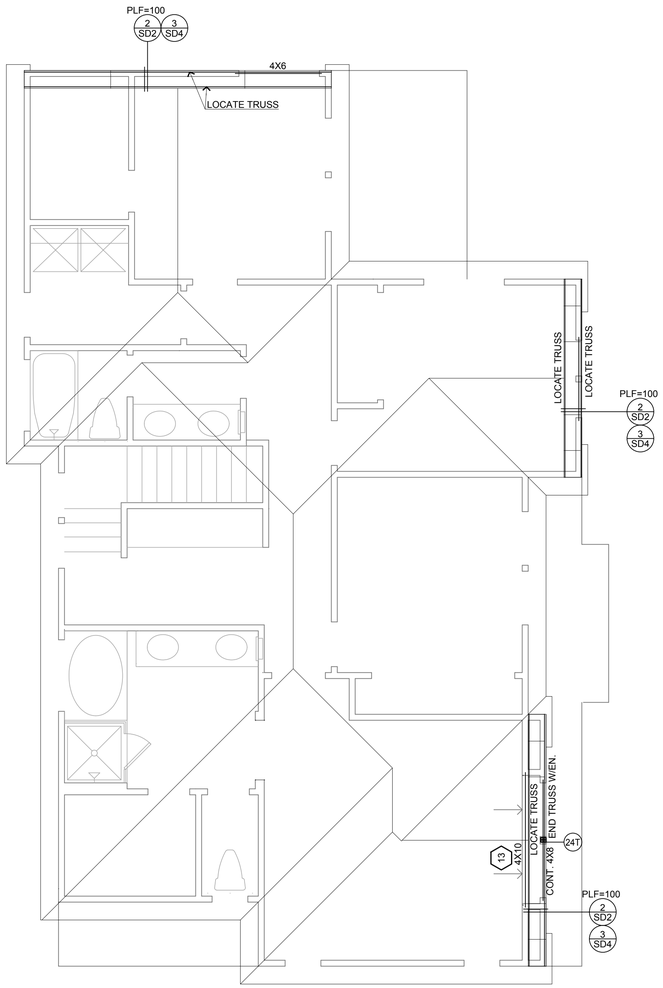

PARTIAL
ROOF FRAMING PLAN
PLAN 3D

ALL INFORMATION FROM BASIC PLAN APPLIES TO ALTERNATE ELEVATION (U.N.O.)

SCALE : 1/4" = 1'-0"

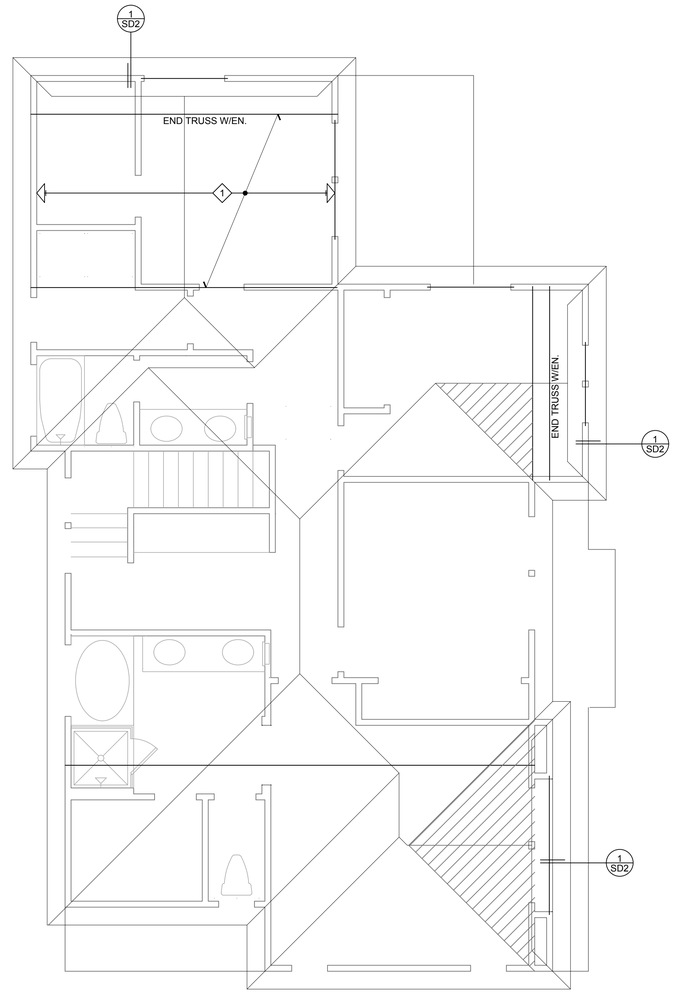

PARTIAL
ROOF FRAMING PLAN
PLAN 3C

ALL INFORMATION FROM BASIC PLAN APPLIES TO ALTERNATE ELEVATION (U.N.O.)

SCALE : 1/4" = 1'-0"

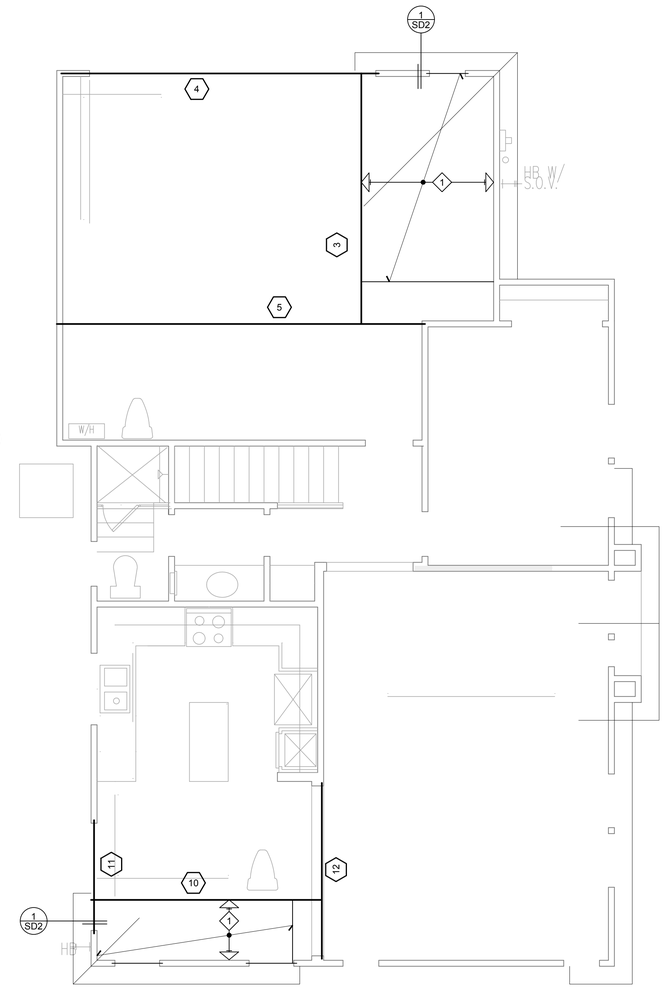

PARTIAL
FLOOR FRAMING PLAN
PLAN 3C

ALL INFORMATION FROM BASIC PLAN APPLIES TO ALTERNATE ELEVATION (U.N.O.)

SCALE : 1/4" = 1'-0"

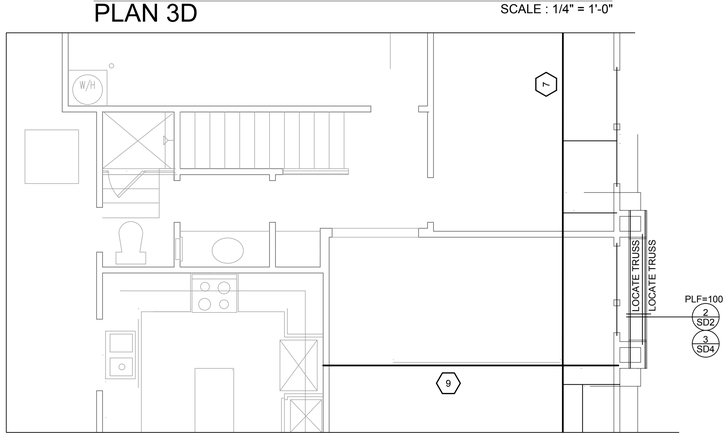

PARTIAL
FLOOR FRAMING PLAN
PLAN 3D

ALL INFORMATION FROM BASIC PLAN APPLIES TO ALTERNATE ELEVATION (U.N.O.)

SCALE : 1/4" = 1'-0"

GOUVIS engineering
consulting group, inc.

4400 Campus Drive
Newport Beach
CA 92660

Newport Beach
tel 949.752.1612
fax 949.752.5321

Palm Springs
tel 760.323.5090

REGISTERED PROFESSIONAL ENGINEER
MIKE HOUSHMAND
No. C042283
Exp. 3/31/20
CIVIL
STATE OF CALIFORNIA

DATE SIGNED: 4/23/18

RESTRICTIVE NOTICE

THESE DESIGNS, DRAWINGS, AND SPECIFICATIONS ARE THE EXCLUSIVE PROPERTY OF GOUVIS ENGINEERING CONSULTING GROUP, AND ALL INFORMATION SHOWN IS CONFIDENTIAL TO ALL RECIPIENTS AND NO PART OF THESE DRAWINGS CAN BE COPIED, TRANSFERRED, OR REPRODUCED, NOR CAN ANY STRUCTURES BE BUILT FROM THEM WITHOUT WRITTEN CONSENT OF GOUVIS ENGINEERING CONSULTING GROUP

COPYRIGHT GOUVIS ENGINEERING CONSULTING GROUP 2008 ALL RIGHTS RESERVED

PROJECT:
The Colony
65

NOT FOR BID OR CONSTRUCTION

DEVELOPER:

ARCHITECT:
KPI

LOCATION:
Lancaster,
Los Angeles,
CA

REVISIONS

NO.	DATE	DESCRIPTION

SHEET NAME:
PARTIAL FRAMING PLAN
PLAN 3C & PLAN 3D

PROJECT NUMBER:
64797

ENGINEER: H.V
DRAFTER: H.V

ISSUED DATE:	PLOT DATE:
03/19/2018	04/23/2018

SHEET NUMBER:
S-3.4

NOTE:
- 4x4 POSTS CAN BE REPLACED WITH 2-2x4 AS LONG AS NAILS ARE MAINTAINED WITH MIN. EDGE DISTANCE AS REQUIRED BY THE MANF. SPEC. & S.W. EDGE NAILS STAGG ON BOTH STUDS.
- FOR DUAL-POUR FOUNDATIONS, USE (2) #5 DOWELS PLACED WITHIN 2" FROM EACH STRAP. 18" / le

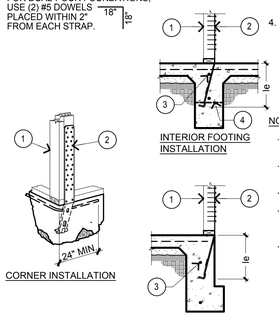

NOTES:
- INSTALL STRAPS OVER SHEAR PANEL.
- REFER TO DETAILS #1 & #2 FOR MORE INFORMATION
- MIN. f'c = 2500 psi.
- FOR MISSING OR MISLOCATED HOLDOWN STRAP, SEE DETAIL 18/SN-3.
- DEEPEN FOOTING AS REQUIRED TO ACHIEVE le+4, AND EXTEND THIS DEEPEN FOOTING 1.5 le BOTH SIDES OF STRAP PARALLEL TO FOOTING LONGITUDINAL DIRECTION. PROVIDE MIN. 3" CLR ALL AROUND FOR STEEL STRAP & BEND THE REBAR AT CORNER AS NEEDED.
- USE STHD10RJ & STHD14RJ FOR RIM JOIST APPLICATION.

SIMPSON HOLDOWN	le	16d SINKER NAILS	#4 BAR x 8'-0" MIN. CENTERED @ HD IN FOOTING*
STHD10	10"	20	(1) TOP & (1) BOTT.
STHD14	14"	24	(1) TOP & (1) BOTT.

* CONT. FOOTING REINFORCEMENT CAN BE COUNTED AS PART OF REBAR REQUIREMENT.

R HOLDOWN STRAP D5100–130204 17

1. MIN. 4X4 POST (U.N.O.).
2. REFER TO PLANS & TABLE BELOW FOR CONNECTION TYPE.
3. REBAR PER TABLE, CENTERED @ "HD" (BEND REBAR @ CORNER). LOCATE TOP BAR 3" TO 5" FROM TOP OF CONCRETE.
4. BOTTOM OF CONT. FOOTING BEFORE BEING DEEPENED WHERE OCCURS.

NOTES:
- 4x4 POSTS CAN BE REPLACED W/ 2-2x4 AS LONG AS NAILS ARE MAINTAINED W/ MIN. EDGE DISTANCE AS REQUIRED BY THE MANUF. SPEC. & S.W. EDGE NAILS STAGGERED ON BOTH STUDS.
- FOR NON-MONO POUR FOUNDATIONS, USE (2) #5 18" / le DOWELS PER EACH SSTB BOLT. PLACED WITHIN 2" FROM THE BOLT.

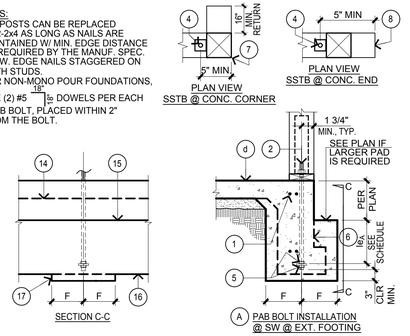

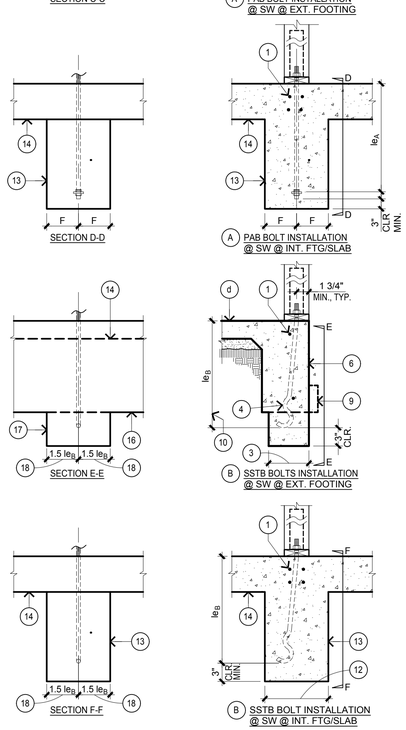

1. REBAR PER TABLE, CENTERED @ "HD" (BEND REBAR @ CORNER). FOR COND. B, LOCATE TOP REBAR 3" TO 5" FROM TOP OF CONCRETE.
2. SIMPSON PAB STD. STEEL BOLTS PER SCHED. (ALL THREAD A307-C/A36 RODS CAN BE USED IN LIEU OF PAB BOLTS).
3. CONCRETE STEM/FOOTING WIDTH (8" MIN. FOR 7/8"Ø BOLT, 6" MIN. FOR 5/8"Ø BOLT) ENTIRE EMBED. LENGTH.
4. SSTB BOLTS PER SCHEDULE.
5. DOUBLE HEX NUTS WITH WASHER. SEE SCHEDULE FOR SIZES.
6. EXTERIOR FOOTING EDGE.
7. CONCRETE CORNER.
8. CONCRETE END.
9. WIDEN FTG. WHERE OCCURS, SEE DETAIL #1.
10. 20 5/8" FOR SSTB24, 24 7/8" (MIN.) FOR SSTB28.
11. USE 16d SINKER NAILS. (0.148"x3 1/4") FOR HTT4 & HTT5.
12. FTG WIDTH (13" FOR 7/8"Ø BOLT, 9" FOR 5/8"Ø BOLT).
13. EDGE OF DEEPENED SLAB/FTG FOR HOLDOWN @ INT. SHEAR WALL.
14. BOTTOM OF SLAB.
15. TOP OF DEEPENED EXT. FTG FOR PAB BOLT INSTALLATION.
16. BOTTOM OF EXT. FOOTING/ MAT.
17. EDGE OF EXTENDED/ENLARGED EXTERIOR FOOTING.
18. FOR ANCHOR BOLT LOCATED LESS THAN 1.5 le_B FROM CONC CORNER/END, EXTEND THE FTG AS FOLLOWS: CORNER COND. - THE REMAINING BALANCE OF 1.5 le_B - (16" MAX.), INTO THE RETURN FOOTING. END. COND. - FOR SSTB LOCATED AT LESS THAN 1.5 le_B FROM CONC FOOTING END, THE EXTENDED FOOTING PER SEC. E-E & SEC. F-F, ENDS AT WHERE CONCRETE FOOTING END PER PLAN.

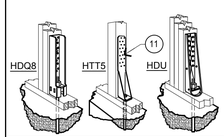

NOTES:
- SEE PLANS FOR HOLDOWN TYPES.
- SEE DETAIL #1 FOR LEGEND & INFO NOT SHOWN.
- FOR MISSING OR MISLOCATED HOLDOWN, SEE DETAIL 18/SN-3.
- REFER TO MANUFACTURER SPECIFICATIONS FOR INSTALLATION INFORMATION NOT SHOWN.
- WHEN 3-2X MEMBER IS USED FOR HDQ8 & HDU, 1/4"Ø x4 1/2" SDS SCREWS SHOULD BE USED.
- HEAVY HEX ANCHOR NUT IS REQUIRED ON LOAD TRANSFER PLATE FOR HDU11, HDU14, HHDQ11, & HHDQ14 HOLDOWNS.
- FOR HD12 AND HD19, USE 6X6 POST MIN.

SIMPSON HOLDOWN	(COND. A) PAB BOLTS SIZES	F (MIN)	le A	PL. WASHER SIZE(MIN.)	(COND. B) SSTB BOLTS SIZES	FTG EXTENSION	#4 BAR x 8'-0" CENTERED @ HD *	IN LIEU OF #4 USE #5 BAR x 8'-0" CENTERED @ HD *
HTT4/HTT5	PAB5	10"	6 3/4"	3/4"x3 3/4"x3/16"	SSTB24	SEE SECT. E-E & SECT. F-F	(2) TOP & (2) BOT.	(1) TOP & (1) BOT.
HDU8	PAB7	13 3/4"	9"	7/8"x2 1/2"x2 1/4"	SSTB28		(2) TOP & (2) BOT.	
HDQ8					SSTB28		(3) TOP & (3) BOT.	
HDU11 HHDQ11	PAB8	16 3/4"	11"	7/8"x2 3/4"x2 3/4"	SSTB BOLTS NOT APPLICABLE		(4) TOP & (4) BOT.	(2) TOP & (2) BOT.
HDU14 HHDQ14							N.A.	
HD12	PAB9	19"	12 3/4"	9/16"x3 3/4"x3 3/4"				(3) TOP & (3) BOT.
HD19	PAB10	22"	14 3/4"	7/8"x3 3/4"x3 3/4"				

* CONT. FOOTING REINFORCEMENT CAN BE COUNTED AS PART OF REBAR REQUIREMENT IF BAR SIZE ARE SAME AS THOSE REQUIRED PER SCHEDULE; OTHERWISE, BARS PER SCHEDULE ARE ADDITIONAL.

R TYP. HOLDOWN INSTALLATION D5107C–180201 16

NOTE:
PROVIDE CONTROL JOINT AT 10'-0" EACH WAY (U.N.O.)
SEE DETAIL #1 FOR LEGEND & INFORMATION NOT SHOWN
PROVIDE SAW CUT WITHIN 24 HOURS OF POUR

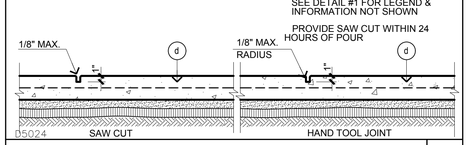

R TYP. CONTROL JOINT 10

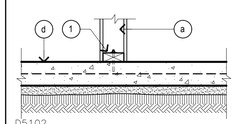

NOTE:
SEE DETAIL #1 FOR LEGEND & INFORMATION NOT SHOWN
1. SEE FOUNDATION NOTE 2 ON SHEET SN-1

R NON-BEARING INTERIOR WALL 11

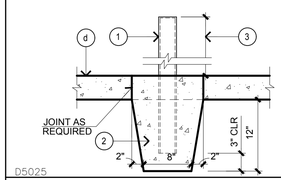

1. 3" DIA. CONCRETE FILLED PIPE BUMPER GUARD
2. CONCRETE FOOTING
3. 36" OR PER ARCHITECT

R PIPE COLUMN 12

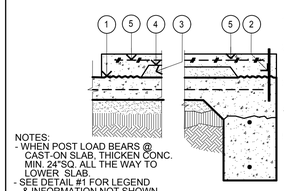

NOTES:
- WHEN POST LOAD BEARS @ CAST-ON SLAB, THICKEN CONC. MIN. 24"SQ. ALL THE WAY TO LOWER SLAB.
- SEE DETAIL #1 FOR LEGEND & INFORMATION NOT SHOWN.

1. ROUGHEN SLAB CONTACT SURFACES TO RECEIVE CAST -ON SLAB 2ND POUR.
2. ALL A.B., HD.B. & STRAPS MUST BE MADE LONG ENOUGH FOR MIN. EMBEB. INTO FIRST POUR OF SLAB OR FOOTINGS
3. SAND BASE MAY BE REPLACED W/SOLID CONC. AT CONTRACTOR'S OPTION
4. 4" THICK MIN. BUILT-UP SLAB OVER COMPACTED MOISTENED SAND BASE.
5. #4 REBARS @ 16" O.C. EA. WAY

R BUILT-UP SLAB D5135 13

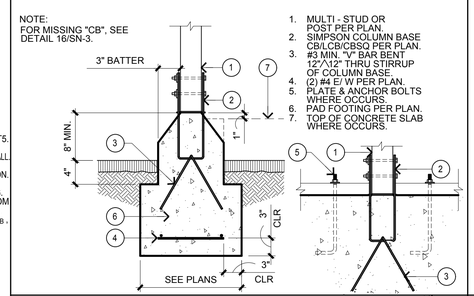

NOTE:
FOR MISSING "CB", SEE DETAIL 16/SN-3.

1. MULTI - STUD OR POST PER PLAN.
2. SIMPSON COLUMN BASE CB/LCB/CBSQ PER PLAN.
3. #3 MIN. "V" BAR BENT 12"/\12" THRU STIRRUP OF COLUMN BASE.
4. (2) #4 E/ W PER PLAN.
5. PLATE & ANCHOR BOLTS WHERE OCCURS.
6. PAD FOOTING PER PLAN.
7. TOP OF CONCRETE SLAB WHERE OCCURS.

R COLUMN BASE D5023–110901 14

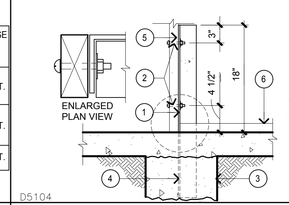

1. 3"X 3"X 1/4"X 30" LONG STEEL ANGLE
2. (2) 3/8" DIA. CARRIAGE BOLTS
3. SHOVEL FOOTING
4. 12" CONCRETE EMBEDMENT
5. 2X4 P.T.D.F. MEMBER
6. 2X4 P.T.D.F. PLATE (NOTCH AROUND STEEL ANGLE)

R PONY WALL 15

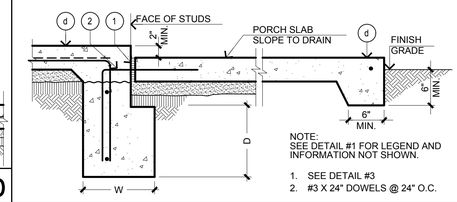

NOTE:
SEE DETAIL #1 FOR LEGEND AND INFORMATION NOT SHOWN.
1. SEE DETAIL #3
2. #3 X 24" DOWELS @ 24" O.C.

R HOUSE TO PORCH D5098N 5

NOTES:
- SEE DETAIL #1 FOR LEGEND AND INFORMATION NOT SHOWN.
- 4x4 POSTS CAN BE REPLACED WITH 2-2x4 AS LONG AS NAILS ARE MAINTAINED WITH MIN. EDGE DISTANCE AS REQUIRED BY THE MANF. SPEC. & S.W. EDGE NAILS STAGG ON BOTH STUDS.

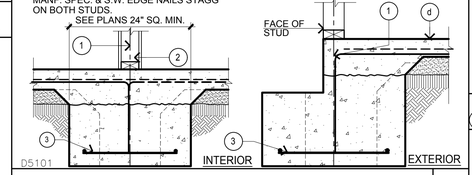

1. CENTERLINE OF POST AND PAD FOOTING.
2. POST IN WALL OR USE COLUMN BASE. SEE PLAN
3. REINFORCEMENT, SEE PLANS

R ISOLATED PAD FOOTING 6

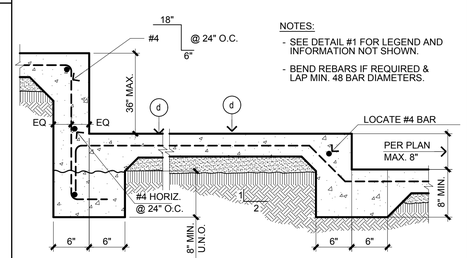

NOTES:
- SEE DETAIL #1 FOR LEGEND AND INFORMATION NOT SHOWN.
- BEND REBARS IF REQUIRED & LAP MIN. 48 BAR DIAMETERS.

R STEP AT CONCRETE SLAB D5099–110301 7

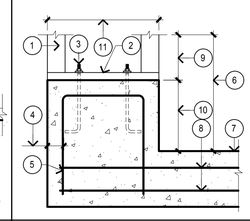

1. POST PER PLAN
2. SILL PLATE
3. ANCHOR BOLT. SEE PLANS FOR SIZE AND SPACING
4. 3" CLEARANCE. TYPICAL
5. ADD #4 BAR BENT DOWN INTO FOOTING AT CURB.
6. 7'-0" TO THE BOTTOM OF THE HEADER (U.N.O.)
7. TOP OF SLAB AT GARAGE
8. TYPICAL CONT. #4 TOP AND BOTTOM (U.N.O.)
9. 6'-6" TO THE BOTTOM OF THE HEADER
10. 7" CURB MIN.
11. 1'-10" MIN.

NOTE:
4x4 POSTS CAN BE REPLACED WITH 2-2x4 AS LONG AS NAILS ARE MAINTAINED WITH MIN. EDGE DISTANCE AS REQUIRED BY THE MANF. SPEC. & S.W. EDGE NAILS STAGG ON BOTH STUDS.

R RAISED CURB D5017 8

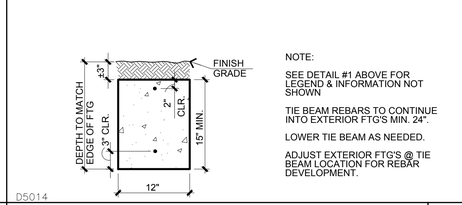

NOTE:
SEE DETAIL #1 ABOVE FOR LEGEND & INFORMATION NOT SHOWN
TIE BEAM REBARS TO CONTINUE INTO EXTERIOR FTG'S MIN. 24".
LOWER TIE BEAM AS NEEDED.
ADJUST EXTERIOR FTG'S @ TIE BEAM LOCATION FOR REBAR DEVELOPMENT.

R TIE BEAM 9

NOTES:
- FOR MISSING/MISLOCATED A.B. , SEE DET. 19/SN-3 FOR FIX.
- FOR OVERSIZED HOLE IN SILL PLATE, SEE DET. 15/SN-3 FOR FIX.
- VAPOR BARRIER TO HAVE MIN. 6" LAP AT ALL SEAMS PER MANUF. (U.N.O.).
- VERIFY ALL INFORMATION PER UPDATED SOILS REPORT.
- "D" IS EMBEDMENT DEPTH BELOW LOWEST ADJACENT GRADE.
- SAND OVER VISQUEEN CAN BE ELIMINATED UPON VERIFICATION W/ SOILS ENGINEER, & USE OF W/C RATIO OF .45 WHEN CONC. CAN BE ASSURED TO BE CURED PROPERLY.

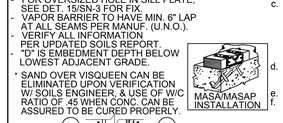

a. 2X STUDS @ 16" O.C.
b. INTERIOR FINISH.
c. 2X P.T.D.F. SILL (USE 3X WHERE INDICATED ON PLANS) W/ 5/8" DIA. ANCHOR BOLTS OR MASA/MASAP. SEE FOUNDATION PLAN & NOTES UNDER "FOUNDATION" ON SN-1 SHEET(S) FOR OTHER REQUIREMENTS.
d. 4" CONC. SLAB W/ #3 BARS @ 18" O.C. E/W @ MID HT. OF SLAB (U.N.O. PER SOILS REPORT.
e. CONT. REBAR T&B PER TABLE (U.N.O.).
f. MIN. 10 MIL VAPOR BARRIER OR AS RECOMMENDED BY SOILS ENGINEER. SEE ALSO THEIR RECOMMENDATIONS FOR SAND BELOW AND ABOVE VAPOR BARRIER.*
h. EXTERIOR FINISH W/ G.I. BASE SCREED. SEE ARCHITECTURAL.
p. 7" EMBEDMENT. (FOR DUAL POUR, THE 7" EMBEDMENT INTO THE 1st. POUR STARTS FROM THE COLD JOINT).
q. PLYWOOD PER PLAN.
r. TOP OF NATURAL GRADE OR COMPACT FILL.

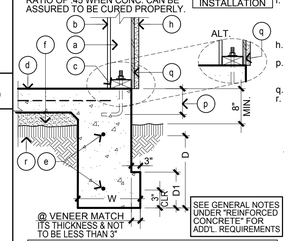

NOTES FOR DUAL POUR:
- (FOR DUAL POUR DEFINITION, SEE NOTE 14 UNDER FOUNDATION NOTES ON SN-1).
- USE #4 DOWELS 18" @ 18" O.C. EMBED MIN. 12" ON FIRST POUR. DOWELS ARE REQUIRED AT ANY OF THE FOLLOWING CONDITIONS:
  1. SOILS WITH 20 < E.I. < 50 & OR COMPRESSIVE SOILS W/ DIFF. SETTLEMENT OF 1" MAX. IN 40'-0".
  2. USING MASA/MASAP IN LIEU OF ANCHOR BOLTS.
  3. ANCHOR BOLT EMBEDMENT LESS THAN 7" INTO 1st POUR.

SEE GENERAL NOTES UNDER "REINFORCED CONCRETE" FOR ADD'L. REQUIREMENTS

FOOTING DIMENSIONS/REINF. U.N.O.				
# OF STORIES	W WIDTH	D DEPTH	D1 DEPTH	CONTINUOUS REBAR "e"
1	12"	12"	6"	1-#4 TOP & BOTTOM
2	15"	18"	8"	1-#5 TOP & BOTTOM
3 & 4	18"	24"	12"	2-#4 TOP & BOTTOM
5	SEE DESIGN			

R TYPICAL EXTERIOR FOOTING D5095–150826 1

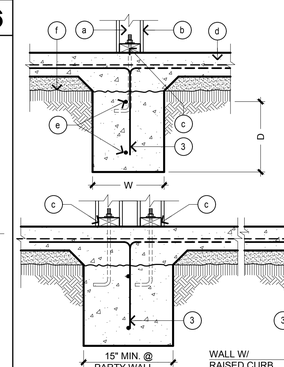

1. ADD #4 HORIZON.
2. #4 VERT. @ 12" O.C.
3. SEE NOTE FOR DUAL POUR ON DETAIL #1.

NOTES:
- SEE DETAIL #1 FOR LEGEND & INFORMATION NOT SHOWN.
- IN LIEU OF ANCHOR BOLTS USE SHOT PINS AS PER GENERAL NOTES FOR NON- SHEAR WALLS.

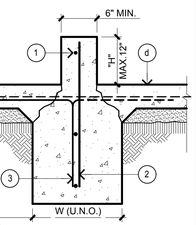

R INTERIOR BEARING FOOTING D5096–131107 2

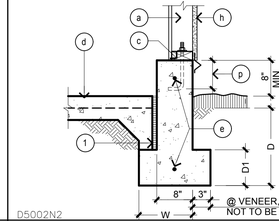

NOTE:
SEE DETAIL #1 FOR LEGEND & INFORMATION NOT SHOWN.
1. ISOLATED SLAB FROM STEM WALL (USE 1/2" FIBERBOARD MATERIAL)

R EXT. BEARING GARAGE CURB 3

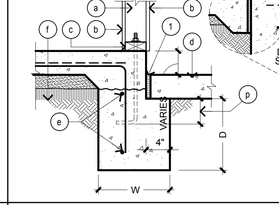

NOTE:
SEE DETAIL #1 FOR LEGEND & INFORMATION NOT SHOWN
1. SEE DETAIL #3

R HOUSE TO GARAGE/APRON D5097N 4

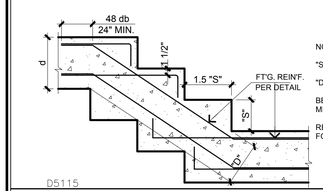

NOTES:
"S" SHOULD BE MAX 18"
"D" IS OVERALL DEPTH OF FT'G.
BEND REBARS IF REQUIRED & LAP MIN. 48 BAR DIAMETERS
REINFORCEMENT TO MATCH FOUNDATION DETAILS.

R STEPPED FOOTING 19

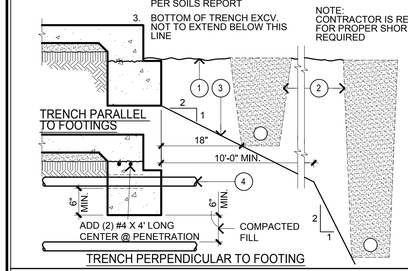

1. FINISH GRADE
2. BACKFILL TRENCH EXCV. PER SOILS REPORT
3. BOTTOM OF TRENCH EXCV. NOT TO EXTEND BELOW THIS LINE
4. CREATE PIPE SLEEVE 2" LARGER THAN PIPE

NOTE:
CONTRACTOR IS RESPONSIBLE FOR PROPER SHORING WHEN REQUIRED

R TYP. TRENCH @ FOOTINGS D5117 20

GOUVIS engineering
consulting group, inc.
4400 Campus Drive
Newport Beach
CA 92660

Newport Beach
tel 949.752.1612
fax 949.752.5321

Palm Springs
tel 760.323.5090

REGISTERED PROFESSIONAL ENGINEER MICHAEL HOUSTON-WARD No. C042283 Exp. 3/31/20 CIVIL STATE OF CALIFORNIA

DATE SIGNED: 4/23/18

RESTRICTIVE NOTICE

THESE DESIGNS, DRAWINGS, AND SPECIFICATIONS ARE THE EXCLUSIVE PROPERTY OF GOUVIS ENGINEERING CONSULTING GROUP, AND ALL INFORMATION SHOWN IS CONFIDENTIAL TO ALL RECIPIENTS AND NO PART OF THESE DRAWINGS CAN BE COPIED, TRANSFERRED, OR REPRODUCED, NOR CAN ANY STRUCTURES BE BUILT FROM THEM WITHOUT WRITTEN CONSENT OF GOUVIS ENGINEERING CONSULTING GROUP

COPYRIGHT GOUVIS ENGINEERING CONSULTING GROUP 2008 ALL RIGHTS RESERVED

PROJECT:
The Colony 65

NOT FOR BID OR CONSTRUCTION

DEVELOPER:

ARCHITECT:
KPI

LOCATION:
Lancaster, Los Angeles, CA

REVISIONS

NO.	DATE	DESCRIPTION

SHEET NAME:
STRUCTURAL FOUNDATION DETAILS FOR VERY LOW & LOW EXPANSIVE SOILS WITH E.I. < 20 & COMPRESSIVE SOILS OF UP TO 1" IN 40'

PROJECT NUMBER:
64797

ENGINEER: GE
DRAFTER: GE

ISSUED DATE: 03/19/2018
PLOT DATE: 04/23/2018

SHEET NUMBER:
SD-1

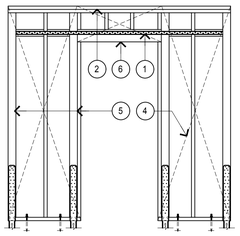

1. CS16 OVER SHEAR PANEL OVER 2X BLK'G W/8d @ 2 1/16" O.C. EXTEND ONTO RDR. OR WINDOW SILL & ACROSS SHEAR PANEL TYP. EACH CORNER OF OPENING. (ALT. INSTALL OVER 2X MIN. BLK'G ABOVE & BELOW OPENING FULL LENGTH OF SHEAR PANEL).
2. DOUBLE 2X TOP PLATE.
3. 2X STUD PER PLAN.
4. SHEAR PANEL TYPE PER PLAN ALL AROUND OPENING. PROVIDE B.N. AT BLK'G & EDGES OF SHEAR WALL.
5. CONT. STUD'S OR POST W/ B.N. & W/HOLDOWN PER PLAN AT OUTSIDE EDGES OF SHEAR PANEL & EDGES OF DOORWAYS.
6. HEADER PER PLAN.
7. WINDOW SILL WHERE OCCURS.
8. NAILING/SCREWS/BOLT PER PLAN.
9. STAGGERED FACE NAILS PER NOTE 5 OF DETAIL 2/SN3.
10. PANEL EDGE.

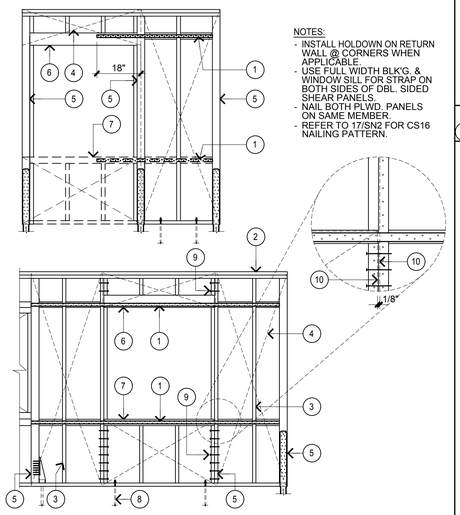

NOTES:
- INSTALL HOLDOWN ON RETURN WALL @ CORNERS WHEN APPLICABLE.
- USE FULL WIDTH BLK'G. & WINDOW SILL FOR STRAP ON BOTH SIDES OF DBL. SIDED SHEAR PANELS.
- NAIL BOTH PLWD. PANELS ON SAME MEMBER.
- REFER TO 17/SN2 FOR CS16 NAILING PATTERN.

OPENING @ SHEAR WALL — 15

GE100-120217

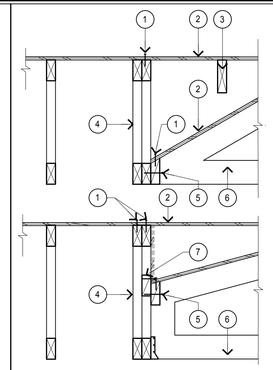

1. EDGE NAILING.
2. ROOF SHEATHING.
3. OVERFILL RAFTERS.
4. SHEAR/ GIRDER TRUSS PER MANUFACTURER.
5. 2X BLK'G. W/ 16d's SINKER NAILS AT 6" O.C. SEE DETAIL 13/SN2 FOR NON- BEVELED BLOCK.
6. MANUFACTURED TRUSS W/ APPROVED HANGER.
7. LINE OF BLK'G. INSTALLED BY TRUSS MANUFACTURER AND TO TRANSFER 250 PLF TO TOP CHORD. IF GIRDER TRUSS IS NOT DESIGNED TO TRANSFER THIS LOAD, APPLY SHEAR PANEL TYPE 2.

SHEAR TRANSFER — 11

D0044 100920

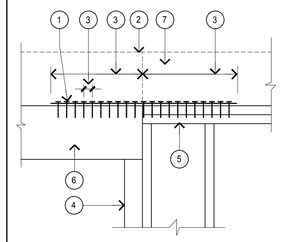

1. SIMPSON STRAP PER TABLE (2) ROWS OF NAILS FOR EA. STRAP.
2. SIMILAR CONDITION (FLUSH BEAM/ JOIST (S).
3. SPACING AND END LENGTH SEE TABLE.
4. POST OR MULTI STUD, SEE PLAN.
5. DBL. TOP PLATE.
6. BEAM OR JOIST (S), W/ LINE OF EDGE NAILING SEE PLAN.
7. CONT. JOIST OR BLOCKING, SEE FRAMING PLAN.

NOTES:
- MIN. 3 1/2" WIDE MEMBER FOR CONDITION C &D.
- REFER TO 17/SN2 FOR CS16 NAILING PATTERN.

* MIN. 1/2" SPACING BETWEEN ROWS OF NAILS.

	STRAP	END LENGTH	NAIL SIZE AND SPACING	CAPACITY
A	CS16	3'-0"	8d BOX/SINKER AT 4 1/8"	1700#
B*	(2) CS16	3'-0"	8d BOX/SINKER AT 4 1/8"	3400#
C	CMSTC16	6'-0"	10d BOX AT 4 1/2"	4585#
D	CMST14	6'-3"	10d BOX AT 3 1/2"	6490#

DRAG DETAIL — 8

D0032 100920

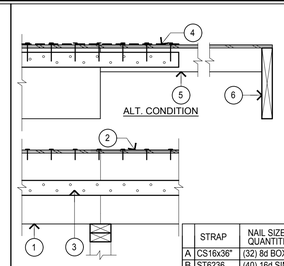

ALT. CONDITION

1. TIMBER STRAND, LSL OR 4X DRAG STRUT W/ E.N. PER PLANS. IF NOT CONTINUOUS SPLICE PER TABLE BELOW.
2. PLYWOOD SHEATHING W/ E.N. ALONG DRAG LINE.
3. SEE TABLE BELOW.
4. ALT. LOCATION.
5. 4X DRAG STRUT. ALT 2x FLAT @ CS16.
6. 2X FULL HT. HEAD OUT IF REQUIRED.

STRAP SHOULD BE CENTERED @ SPLICE POINT.

	STRAP	NAIL SIZE & QUANTITIES	CAPACITY	DRAG STRUT. LENGTH
A	CS16x36"	(32) 8d BOX/SINKER	1700#	8'-0" U.N.O.
B	ST6236	(40) 16d SINKER	3230#	14'-0"
C	MST48	(50) 16d SINKER	4460#	CONTINUOUS
D	MST60	(66) 16d SINKER	5653#	CONTINUOUS

DRAG DETAIL — 4

D0034 100920

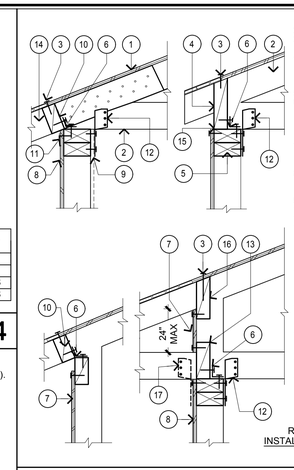

RBC INSTALLATION

MAX. 3/4" GAP

1. PLYWOOD SHEATHING.
2. TRUSS BY MANUFACTURER.
3. 8d COMMON NAILS AT 6" O.C. B.N. U.N.O.
4. 2X FULL HEIGHT BEVELED BLK'G. (IF BLK'G. IS NOT BEVELED SEE DETAIL 13-SN2) IF BLK'G. NOT TIGHT FIT., SEE ITEM #15.
5. DBL. TOP PLATE OR BEAM.
6. SIMPSON A35, LS50, OR LTP4. SPACING PER SW SCHEDULE (AT NON-SHEAR WALL, SPACING IS 48" O.C. MAX.). FOR VENT BLOCK SEE DETAIL 1A/SN-2
7. SHEAR PANEL TYPE 2 TYPICAL (U.N.O. ON PLANS) BETWEEN TRUSSES.
8. SEE PLAN FOR TYPE AND LOC. OF SHEAR PANEL ON 2X STUDS AT 16" O.C. MAX.
9. ALT. LOC. OF SHEAR PANEL
10. 2X FULL HEIGHT BLOCKING.
11. TYPICAL BOUNDARY NAILING
12. SIMPSON HI @ EVERY TRUSS. USE LGT FOR GIRDER TRUSS. WIDTH OF LGT TO MATCH NUMBER OF PLYS OF GIRDER TRUSS.
13. 2X BLK'G. & UPPER SHEATHING ABV. PLATE CAN BE REPLACED W/ PRE-FABRICATED FULL DEPTH BLOCKING.
14. 2X RAFTER TAIL W/ MIN. 3'-0" LAP W/ 16d's 6" O.C. STAGG. OR TRUSS TOP CHORD
15. MAX. GAP BETWEEN BLK'G. & TOP PLATE FOR HI & LS50 TO BE 1/2" & FOR A35, TO BE 1/4".
16. 2X BEVELED BLK'G. SEE 13-SN2 IF NOT BEVELED.
17. ALT. LOCATION OF HI/LGT.

SHEAR TRANSFER DETAIL — 1

D0022-110106

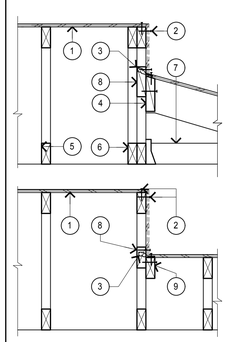

ALT. CONDITION

1. ROOF SHEATHING
2. EDGE NAILING
3. H2.5 @ 48" O.C. TYPICAL
4. 2X BEVELED BLK'G. W/ 16d's @ 6" O.C. IF NOT BEVELED, SEE DETAIL 13-SN2
5. TYP. TRUSSES PER TRUSS MANUFACTURER
6. SHEAR/ GIRDER TRUSS DESIGNED BY TRUSS ENGINEER
7. TRUSS/ JACK TRUSSES W/APPROVED HANGER BY TRUSS MANUFACTURER
8. LINE OF BLK'G. INSTALLED BY TRUSS MANUFACTURER & TO TRANSFER 250 PLF TO TOP CHORD OF GIRDER. IF GIRDER TRUSS IS NOT DESIGNED TO TRANSFER LOAD, APPLY PLWD. TYPE 2.
9. 2X CONT. NAILER OR TOP CHORD OF TRUSS W/ 16d's @ 6" O.C.
10. ALT. LOCATION OF PLYWOOD TYPE 2.
11. 2X FLAT BLK'G.

SHEAR TRANSFER — 12

D0103 100920

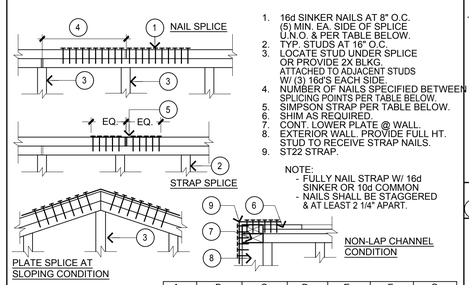

PLATE SPLICE AT SLOPING CONDITION

STRAP SPLICE

NON-LAP CHANNEL CONDITION

1. 16d SINKER NAILS AT 8" O.C. (5) MIN. EA. SIDE OF SPLICE U.N.O. & PER TABLE BELOW.
2. TYP. STUDS AT 16" O.C.
3. LOCATE STUD UNDER SPLICE OR PROVIDE 2X BLKG. ATTACHED TO ADJACENT STUDS W/ (3) 16d'S EACH SIDE.
4. NUMBER OF NAILS SPECIFIED BETWEEN SPLICING POINTS PER TABLE BELOW.
5. SIMPSON STRAP PER TABLE BELOW.
6. SHIM AS REQUIRED.
7. CONT. LOWER PLATE @ WALL.
8. EXTERIOR WALL. PROVIDE FULL HT. STUD TO RECEIVE STRAP NAILS.
9. ST22 STRAP.

NOTE:
- FULLY NAIL STRAP W/ 16d SINKER OR 10d COMMON
- NAILS SHALL BE STAGGERED & AT LEAST 2 1/4" APART.

	A	B	C	D	E	F	G
NO. OF 16d SINKER	10	16	22	24	32	36	42
MIN. PLATE LAP	4 FT.	4 FT.	6 FT.	6 FT.	8 FT.	8 FT.	9 FT.
ALT. STRAP W/ 16d SINKER	ST22	ST6224	ST6236	MST37	MSTC52	MST60	CMST12 OR ST22

TYPICAL SPLICE TOP PLATE — 9

D0083 100920

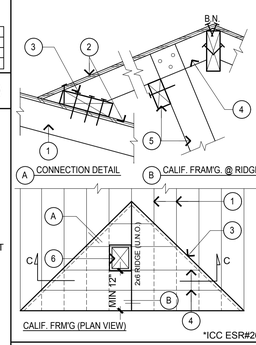

CONNECTION DETAIL

CALIF. FRAM'G. @ RIDGE

CALIF. FRM'G (PLAN VIEW)

1. R/R OR TRUSS PER PLAN.
2. ROOF SHEATHING.
3. MIN. 1X CONT. BOARD W/ (3)16d's TO EACH ROOF FRAMING ELEMENT.
4. 2X R/R @ CA. FRAMING. USE 2X4 @ 24" O.C. FOR MAX. SPAN OF 8'-0" & 2X6 @ 24" O.C. FOR MAX. SPAN OF 10'-0", & TOE NAIL W/ (3) 8d's.
5. 2X6 PURLIN & 2X4 KICKER @ 8'-0" O.C. MAX. TO LIMIT R/R SPAN @ CALIF. FRAMING.
6. (1) BAY WIDTH X 30" ACCESS & VENTILATION OPENING PER ARCHITECTURAL. PROVIDE 2X BLKG. & BOUNDARY NAILING OF ROOF SHEATHING AROUND OPENING.
7. PREFABRICATED VALLEY TRUSS PER MANUFACTURER.
8. SIMPSON "VTCR CLIPS @ EA. END OF VALLEY TRUSS WITH (5) 10dX1 1/2 NAILS TO VALLEY TRUSS & (4) 10dX1 1/2 NAILS TO ROOF FRAMING BELOW.

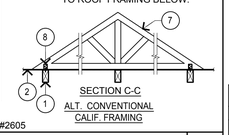

SECTION C-C

ALT. CONVENTIONAL CALIF. FRAMING

*ICC ESR#2605

CALIF. FRM'G SHEAR DETAIL — 6

D0025 100920

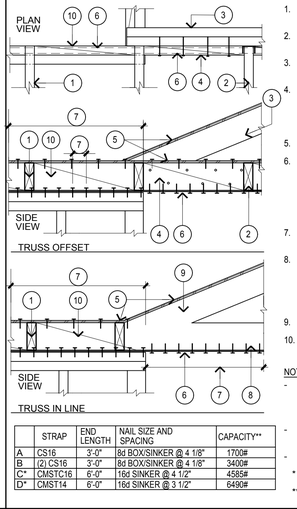

PLAN VIEW

SIDE VIEW

TRUSS OFFSET

TRUSS IN LINE

1. TYP. TRUSSES BEARING ON WALL
2. TYP. TRUSSES HANGING FROM GIRDER TRUSS OR BEAM
3. GIRDER TRUSS OR BEAM OFFSET FROM CORNER.
4. LINE OF BEVELED BLKG. W/E.N. OF ROOF SHT'G. SEE 13/SN2 IF NOT BEVELED. APPLY 16d's AT 8" O.C. TO THE GIRDER TRUSS (MIN. 5 BAYS).
5. ROOF SHEATHING
6. SIMPSON STRAP CUT TO FIT ON WALL AS SHOWN & ACROSS ALL BAYS OF BLKG. AS REQ'D. MIN. (4) BAYS W/ MIN. (3) NAILS TO EACH BLOCK. NAILS PER SCHEDULE. USE (2) ROWS OF NAILS EA. STRAP
7. END LENGTH & SPACING PER TABLE BELOW.
8. PROVIDE 2X4X4'-0" MEMBER NEXT TO TRUSS AT CONDITION B & NAIL TO TRUSS W/ 16d'S @ 4" O.C. STAGGERED & FOR CONDITION C & D USE DBL. TRUSS W/ NAILS @ 4" O.C.
9. DRAG TRUSS W/ LINE OF E.N.
10. LINE OF BEVELED BLKG. W/ E.N. , IF NOT BEVELED, SEE 13/SN2

NOTES:
- IF DRAG TRUSS IS A JACK TRUSS, PROVIDE PLYWOOD TYPE 2 FROM TOP TO BOTT. CHORD.
- USE DBL. BLKG. FOR CONDITION B, C & D
- REFER TO 17/SN2 FOR CS16 NAILING PATTERN.

* APPLY ONLY AT TRUSS IN LINE CONDITION.

** NAIL LATERAL VALUES BASED ON SPF/HF.

	STRAP	END LENGTH	NAIL SIZE AND SPACING	CAPACITY**
A	CS16	3'-0"	8d BOX/SINKER @ 4 1/8"	1700#
B	(2) CS16	3'-0"	8d BOX/SINKER @ 4 1/8"	3400#
C*	CMSTC16	6'-0"	16d SINKER @ 4 1/2"	4585#
D*	CMST14	6'-0"	16d SINKER @ 3 1/2"	6490#

DRAG DETAIL — 7

D0023-110906

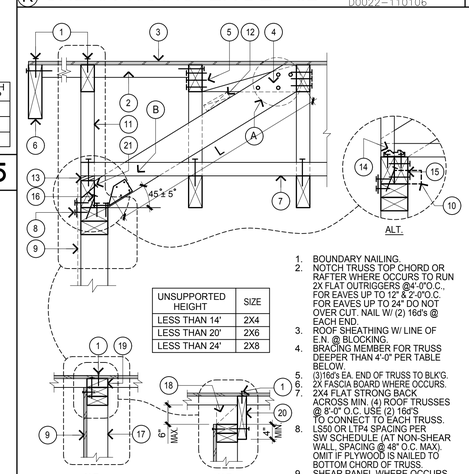

ALT.

ALT.

ALT.

UNSUPPORTED HEIGHT	SIZE
LESS THAN 14'	2X4
LESS THAN 20'	2X6
LESS THAN 24'	2X8

1. BOUNDARY NAILING.
2. NOTCH TRUSS TOP CHORD OR RAFTER WHERE OCCURS TO RUN 2X FLAT OUTRIGGERS @4'-0"O.C. FOR EAVES UP TO 12" & 2'-0"O.C. FOR EAVES UP TO 24" DO NOT OVER CUT. NAIL W/ (2) 16d's @ EACH END.
3. ROOF SHEATHING W/ LINE OF E.N. @ BLOCKING.
4. BRACING MEMBER FOR TRUSS DEEPER THAN 4'-0" PER TABLE BELOW.
5. (3)16d'S EA. END OF TRUSS TO BLK'G.
6. 2X FASCIA BOARD WHERE OCCURS.
7. 2X4 FLAT STRONG BACK ACROSS MIN. (4) ROOF TRUSSES @ 8'-0" O.C. USE (2) 16d'S TO CONNECT TO EACH TRUSS.
8. LS50 OR LTP4 SPACING PER SW SCHEDULE (AT NON-SHEAR WALL, SPACING @ 48" O.C. MAX). OMIT IF PLYWOOD IS NAILED TO BOTTOM CHORD OF TRUSS.
9. SHEAR PANEL WHERE OCCURS.
10. 2X BACKING W/ 8d COM @5"O.C. FACE NAILS TO TOP PLATES.
11. STRUCT. GABLE END SHEAR TRUSS TO TRANSFER 240 PLF FROM TOP TO BOTT. CHORD (U.N.O.).
12. MAX UNSUPPORTED LENGTH OF 2X4 TO BE 6'-0". USE LATERAL BRACING FOR LENGTH > 6'-0".
13. SHIM AS REQUIRED.
14. (1)A35 E/S OF EACH BRACE.
15. 2X4 x24" LONG CENTERED @ BRACE W/ (5)16d's TO TRUSS
16. 8d COM TOE NAILS @6" O.C.
17. FULL HT. BALLOON FRAME STUDS @ 16" O.C. MAX. U.N.O. TO BOTT. OF OUTRIGGER/GABLE END TRUSSS/SCISSOR TRUSS. SIZE PER SCHEDULE U.N.O.
18. SHIM AS REQUIRED.
19. 2X FLAT BLOCKS W/ 16d's @ 4" O.C. TO PLATE BELOW.
20. ALTERNATE COND. W/ ROOF RAFTER NEXT TO WALL W/16 d's @ 8" O.C. TO TOP PLATE.
21. (2) 16d SINKER TOE NAILS BRACE TO TRUSS BOTTM CHORD.

BRACE LENGTH	BRACE SPACING	BRACE SIZE	CONN. (A)	CONN. (B) *
L=5'-8"	6'-0" O.C.	2x4	(6) 16d's	H2.5A
L=10'-4"	6'-0" O.C.	(2) 2x4	(6) 16d's EA. BRACE	H2.5A EA. BRACE

* AS ALTERNATE TO H2.5, USE H3, A34 OR A35.

NOTES:
- DIAGONAL BRACE CAN BE OMITTED @ LOCATION OF INTERSECTING WALLS AND WHEN FULL HT. STUDS USED TO BOTT. OF OUTRIGGER.
- FOR FLAT CONC. TILE ROOFING, ALLOW ROOF RAFTERS TO FLOAT AND NAIL TO TOP PLATE AFTER ROOF IS LOADED TO AVOID UNEVEN RAFTER DEFLECTION.

SHEAR TRANSFER DETAIL — 2

D0015-130307

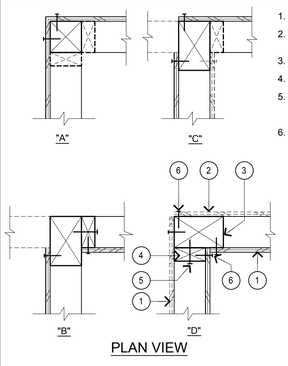

"A"

"C"

"B"

"D"

PLAN VIEW

1. SEE PLAN FOR SHEAR PANEL.
2. ALT. LOCATION OF SHEAR PANEL.
3. 4X6 POST MIN. AS SHOWN.
4. 2X4 STUD (U.N.O.).
5. 16d's @ 3" O.C. STAGGERED FOR SHEAR PANEL TYPE 5 . USE 1/4"Dx4" SDS @ 4" O.C.
6. SHEAR WALL B.N.

CONNECTION DETAILS — 17

D0102 100920

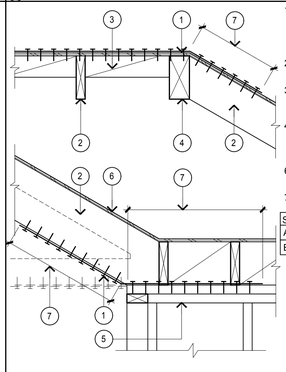

1. SIMPSON CS16 W/ (2) ROWS OF 8d SINKER NAILS @ 4 1/8" O.C. CUT TO FIT OVER ALL BAYS OF BLOCKING. WHERE APPLICABLE.
2. TYPICAL ROOF RAFTER OR TOP CHORD OF TRUSS.
3. 2X FLAT BLK'G. W/ E.N. SEE PLAN FOR NO. OF BAYS (MIN. 4 BAYS).
4. HIP BEAM OR TOP CHORD OF HIP TRUSS.
5. DBL. TOP PLATE OR BEAM.
6. ROOF SHEATHING W/ E.N. ALONG LINE OF DRAG.
7. END LENGTH.

	STRAP	CAPACITY**	END LENGTH
A	CS16	1700#	3'-6"
B*	(2)CS16	3400#	3'-6"

* ADD 2"X4"X48" LONG MEMBER TO RECEIVE 2ND. CS16 & NAIL W/16d's @ 4" O.C. STAGGERED TO ROOF RAFTER/TRUSS TOP CHORD.

* REFER TO 17/SN2 FOR CS16 NAILING PATTERN.

** NAIL LATERAL VALUES BASED ON SPF/HF.

DRAG DETAIL — 14

D0111 100920

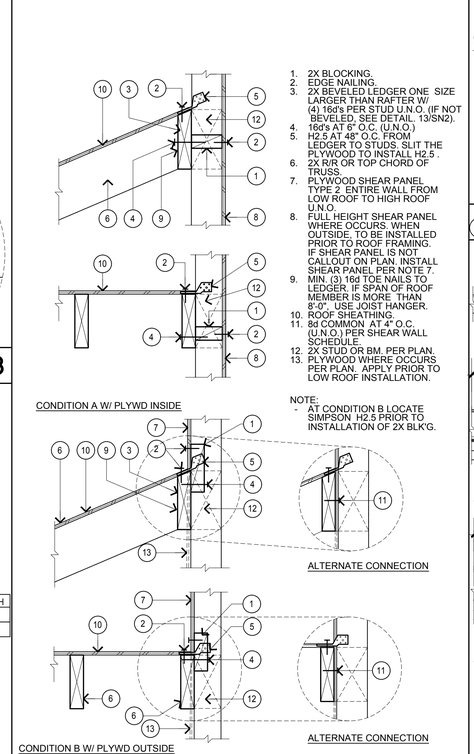

CONDITION A W/ PLYWD INSIDE

ALTERNATE CONNECTION

CONDITION B W/ PLYWD OUTSIDE

ALTERNATE CONNECTION

1. 2X BLOCKING.
2. EDGE NAILING.
3. 2X BEVELED LEDGER ONE SIZE LARGER THAN RAFTER W/ (4) 16d's PER STUD U.N.O. (IF NOT BEVELED, SEE DETAIL. 13/SN2).
4. 16d's AT 6" O.C. (U.N.O.)
5. H2.5 AT 48" O.C. FROM LEDGER TO STUDS. SLIT THE PLYWOOD TO INSTALL H2.5 .
6. 2X R/R OR TOP CHORD OF TRUSS.
7. PLYWOOD SHEAR PANEL TYPE 2 ENTIRE WALL FROM LOW ROOF TO HIGH ROOF U.N.O.
8. FULL HEIGHT SHEAR PANEL WHERE OCCURS. WHEN OUTSIDE, TO BE INSTALLED PRIOR TO ROOF FRAMING. IF SHEAR PANEL IS NOT CALLOUT ON PLAN. INSTALL SHEAR PANEL PER NOTE 7.
9. MIN. (3) 16d TOE NAILS TO LEDGER. IF SPAN OF ROOF MEMBER IS MORE THAN 8'-0" USE JOIST HANGER.
10. ROOF SHEATHING.
11. 8d COMMON AT 4" O.C. (U.N.O.) PER SHEAR WALL SCHEDULE.
12. 2X STUD OR BM. PER PLAN.
13. PLYWOOD WHERE OCCURS PER PLAN. APPLY PRIOR TO LOW ROOF INSTALLATION.

NOTE:
- AT CONDITION B LOCATE SIMPSON H2.5 PRIOR TO INSTALLATION OF 2X BLK'G.

HIGH TO LOW ROOF — 10

D0020 100920

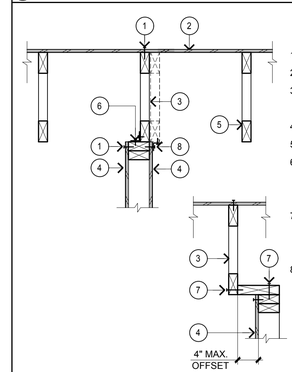

4" MAX. OFFSET

1. EDGE NAILING.
2. ROOF SHEATHING.
3. SHEAR TRUSS TO TRANSFER 200 PLF FROM TOP CHORD TO BOTTOM U.N.O.
4. SEE PLAN FOR TYPE.
5. TYPICAL TRUSSES.
6. A35'S EQUALLY SPACED PER SHEAR WALL SCHEDULE (AT NON-SHEAR WALL, @ 48" O.C. MAX.). CONNECT A35'S AFTER ROOF IS IN PLACE.
7. 2X8 (MAX.) NAILER WITH 10d COMMON NAILS TO PLATE & TRUSS. USE SAME SPACING AS EDGE NAILS OF SW TYPE BELOW.
8. ALT. LOCATION OF A35 IF TRUSS IS OFFSET.

SHEAR TRANSFER — 3

D0012 100904

GOUVIS engineering
consulting group, inc.
4400 Campus Drive
Newport Beach
CA 92660

Newport Beach
tel 949.752.1612
fax 949.752.5321

Palm Springs
tel 760.323.5090

REGISTERED PROFESSIONAL ENGINEER — MIKE HOUSKNECHT — No. C042283 — Exp. 3/31/20 — CIVIL — STATE OF CALIFORNIA

DATE SIGNED: 4/23/18

RESTRICTIVE NOTICE

THESE DESIGNS, DRAWINGS, AND SPECIFICATIONS ARE THE EXCLUSIVE PROPERTY OF GOUVIS ENGINEERING CONSULTING GROUP, AND ALL INFORMATION SHOWN IS CONFIDENTIAL TO ALL RECIPIENTS AND NO PART OF THESE DRAWINGS CAN BE COPIED, TRANSFERRED, OR REPRODUCED. NOR CAN ANY STRUCTURES BE BUILT FROM THEM WITHOUT WRITTEN CONSENT OF GOUVIS ENGINEERING CONSULTING GROUP

COPYRIGHT GOUVIS ENGINEERING CONSULTING GROUP 2008 ALL RIGHTS RESERVED

PROJECT:
The Colony
65

NOT FOR BID OR CONSTRUCTION

DEVELOPER:

ARCHITECT:
KPI

LOCATION:
Lancaster,
Los Angeles,
CA

REVISIONS

NO.	DATE	DESCRIPTION

SHEET NAME:
GENERAL DETAILS & NOTES

PROJECT NUMBER:
64797

ENGINEER: X
DRAFTER: X

ISSUED DATE:	PLOT DATE:
03/19/2018	04/23/2018

SHEET NUMBER:
SD-2

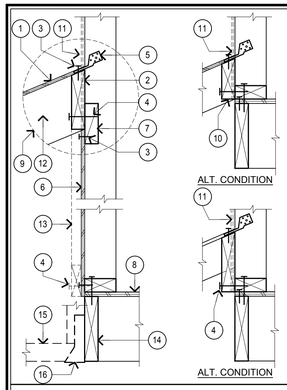

1. ROOF SHEATHING.
2. CONT.2X BEVELED LEDGER W/ (4) 16d's PER STUD U.N.O. (IF NOT BEVELED, SEE DETAIL 13/SN2) FOR SPLICING OF LEDGER (IF NEEDED) USE (1) CS16 X 24" LONG CENTERED @ SPLICE. SEE 17/SN2 FOR NAIL PATTERN.
3. EDGE NAILING.
4. 16d's @ 6" O.C. (U.N.O.).
5. H2.5 @ 48" O.C. FROM LEDGER TO STUDS.
6. PLYWOOD TYPE 2 ENTIRE LENGTH OF WALL U.N.O.
7. 2X BLOCKING.
8. FLOOR SHEATHING. & FLOOR SYSTEM.
9. FOR ALT. CONNECTIONS SEE DETAIL 10/SD2 CONDITION B.
10. 2X BEVELED BLOCKING AS SHOWN. SEE 13-SN2 FOR NON-BEVELED BLOCK.
11. PLYWOOD SHEAR WALL PER PLAN WHERE OCCURS APPLY PRIOR TO LOW ROOF INSTALLATION.
12. ROOF SYSTEM CAN BE PARALLEL OR PERPENDICULAR TO WALL.
13. SHEAR TRUSS OR TRUSS PANEL BLOCKS TO TRANSFER 380 PLF. CAN BE USED AS ALTERNATE TO PLYWOOD TYPE 2.
14. FLOOR BEAM PER PLAN.
15. TRUSS BOTT. CHORD W/ END WEB WHERE OCCURS.
16. TRUSS HANGER PER TRUSS MANUFACTURER.

R FLOOR TO ROOF S.T.

D0046–121017 **12**

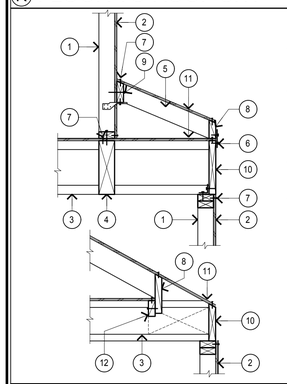

1. 2X STUD WALL.
2. SHEAR PANEL PER PLAN.
3. FLOOR SYSTEM PER PLAN WHEN NOTCHED USE FILLERS.
4. BEAM OR BLK'G. MIN. 1 3/4" WIDE PER PLAN. USE APPROVED HANGER @ FLUSH BEAM CONDITION.
5. 2 X R/R OR JACK TRUSS PER PLAN.
6. LS50 @ 32" O.C.
7. EDGE NAILING.
8. 2X BEVELED BLK'G. W/ E.N., IF NOT BEVELED, SEE 13/SN2.
9. 2X BEVELED LEDGER W/ (3) 16d's TO EACH STUD, IF NOT BEVELED, SEE 13/SN2 ATTACH LEDGER TO STUDS W/ H2.5 AT 48" O.C.
10. BLK'G/RIM JOIST PER PLAN W/ A35's AT 16" O.C. U.N.O. USE LS50/LTP4 IF THE INSTALLATION OF A35 IS IN CONFLICT W/ STEEL STRAP ON TOP PLATES.
11. PLYWOOD SHEATHING.
12. 2X BLK'G. W/ E.N. & W/ (3) 16d's TO BEVELED BLOCK.

R SHEAR TRANSFER DETAIL

GE55–120217 **13**

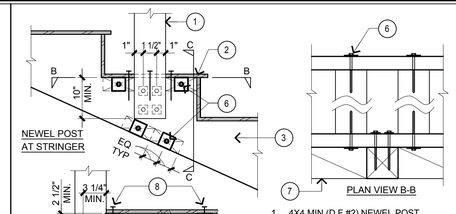

NOTES:

- ALTERNATE TO 1/4"Ø X5" LAG SCREWS SIMPSON 1/4"Ø X6" SDS SCREWS CAN BE USED. A 3/4" THK FULL BEARING PLYWOOD SHIM IS REQUIRED BETWEEN PLATE WASHER & STRINGER FOR SDS SCREWS TO NEWEL POST.
- VERIFY HEADROOM REQUIREMENT WITH ARCHITECTURAL PLANS & FRAMING LAYOUT PRIOR TO CONSTRUCTION.

1. 4X4 MIN.(D.F.#2) NEWEL POST.
2. PLYWOOD TREADS.
3. STRINGER PER DET 10/SD3.
4. 1/4"Ø X5" LAG SCREWS FROM STRINGER TO NEWEL POST. (4) TOTAL W/ PLATE WASHER 1 1/4" SQ. X 3/16" THK.
5. (2) 2X4 FLAT BLOCKING TOP & BOTTOM OF STRINGER (4) TOTAL.
6. 1/4"Ø X5" LAG SCREWS FROM STRINGERS TOP & BOTTOM TO 2X4 FLAT BLOCKINGS (8) TOTAL WITH PLATE WASHER 1 1/4" SQ.X3/16" THK.
7. INFILL BLK'G BETWEEN NEWEL POSTS.
8. (3) 10d NAILS EQUALLY SPACED EA. TREAD TO STRINGER (6) TOTAL.
9. BALUSTER PER ARCHITECT'S DETAIL. CONNECTIONS BY OTHERS (PER MANUF).
10. (2) H2.5A T&B NEWEL POST TO PERIMETER BM.
11. A35 BOTH FACES OF NEWEL POST TO PERIMETER BEAM.
12. PERIMETER BEAM/RIM JOIST PER PLAN.
13. CS16 WRAP AROUND TOP & BOTTOM OF PERIMETER BEAM & 4X4 ADD-ON AND W/ (2) ROWS OF 10d COMMON NAILS @ 2 1/16" O.C. ENTIRE LENGTH. MIN. 16" END LENGTH.
14. 4X4 ADD-ON W/ (9) 16d COM. NAILS @ TOP & BOTT. OF FLOOR JOIST. INSTALL FACE NAILS FROM FLOOR JOIST TO 4X4 ADD-ON.
15. 7/16" DIA. X 4" LONG LAG SCREW WITH WASHER @ 48" O.C. MAX. THROUGH DRY WALL OR PER HANDRAIL MANUFACTURER SPEC.
16. DOUBLE 2X STUDS/4X4 POST @ 4'-0" O.C. MAX.
17. 4X4 BLOCKING @ 4'-0" O.C. MAX. W/ (6) 16d SINKER TOE NAILS @ EA. END. (3) TOP & (3) BOTTOM.
18. (2) 16d SINKER NAILS EACH SIDE OF DOUBLE STUDS (4) TOTAL.
19. FLR. JOIST W/ B.N. ALONG JOIST LENGTH.
20. (2) H2.5A PERIMETER MBR. T&B TO THE IMMEDIATE (DBL.) ADJACENT FLOOR JOISTS (4) TOTAL @ EA. DBL. STUD LOCATION.
21. (2) ST18 BOTH EDGES OF STUDS/4X4 (4) TOTAL. NAIL ALL HOLES W/ 16d COMMON NAILS & SLIT CUT SHEATHING FOR STRAP INSTALLATION.
22. 4X NOMINAL (MIN.) FULL DEPTH PERIMETER MEMBER. ALT., PROVIDE DOUBLE RIM JOISTS W/ PLYWOOD SHIM IN BETWEEN.
23. (2) 16d TOE NAILS EA. SIDE OF DBL. STUDS TOP & BOTTOM.
24. DBL. 2X PLATES W/ (2) ROWS OF 10d NAILS @ 12" O.C. STAGG.
25. HANDRAIL BRACKET PER MANUF.
26. 2X ADD-ON W/ (2) ROWS OF 10d FACE NAILS @ 8" O.C. TO FLOOR JOIST IMMEDIATELY ADJACENT TO (DBL) 2X4 STUDS.

R HANDRAIL/GUARD RAIL-ONE & TWO FAMILY

D0027–160815 **9**

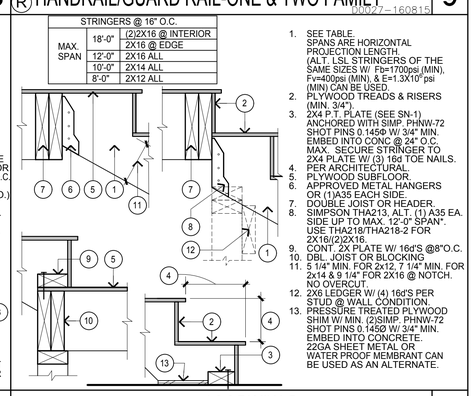

STRINGERS @ 16" O.C.		
MAX. SPAN	18'-0"	(2)2X16 @ INTERIOR
		2X16 @ EDGE
	12'-0"	2X16 ALL
	10'-0"	2X14 ALL
	8'-0"	2X12 ALL

1. SEE TABLE. SPANS ARE HORIZONTAL PROJECTION LENGTH. (ALT. LSL STRINGERS OF THE SAME SIZES W/ Fb=1700psi (MIN), F=400psi (MIN), & E=1.3X10^6 psi (MIN) CAN BE USED.
2. PLYWOOD TREADS & RISERS (MIN. 3/4").
3. 2X4 P.T. PLATE (SEE SN-1) ANCHORED WITH SIMP. PHNW-72 SHO'T PINS 0.145Ø W/ 3/4" MIN. EMBED INTO CONC @ 24" O.C. MAX. SECURE STRINGER TO 2X4 PLATE W/ (3) 16d TOE NAILS.
4. PER ARCHITECTURAL.
5. PLYWOOD SUBFLOOR.
6. APPROVED METAL HANGERS OR (1)A35 EACH SIDE.
7. DOUBLE JOIST OR HEADER.
8. SIMPSON THA213, ALT. (1) A35 EA. SIDE UP TO MAX. 12'-0" SPAN*. USE THA218/THA218-2 FOR 2X16/(2)2X16.
9. CONT. 2X PLATE W/ 16d'S @8"O.C.
10. DBL. JOIST OR BLOCKING.
11. 5 1/4" MIN. FOR 2x12, 7 1/4" MIN. FOR 2x14 & 9 1/4" FOR 2X16 @ NOTCH. NO OVERCUT.
12. 2X6 LEDGER W/ (4) 16d'S PER STUD @ WALL CONDITION.
13. PRESSURE TREATED PLYWOOD SHIM W/ MIN. (2)SIMP. PHNW-72 SHO'T PINS 0.145Ø W/ 3/4" MIN. EMBED INTO CONCRETE. 22GA SHEET METAL OR WATER PROOF MEMBRANT CAN BE USED AS AN ALTERNATE.

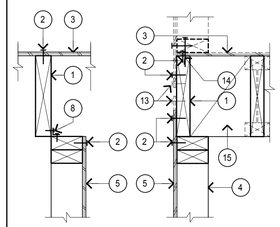

1. 2X MEMBER, 1 1/4" TIMBER STRAND OR L.V.L. CONT. RIM PER PLAN. (USE MIN. 1 1/2" WIDE RIM FOR BLOCKED DIAPHRAGM).
2. BOUNDARY NAILING.
3. FLOOR SHEATHING.
4. STUD WALL WHERE OCCURS.
5. SHEAR PANEL PER PLAN.
6. FLOOR SYSTEM PER PLAN. (CAN BE 2X CONV., I-JOIST OR OPEN WEB FLOOR TRUSS).
7. STAGG. SILL PLATE NAILING. WHERE SPAC'G IS < 6" O.C., PROVIDE 2X NAILER TO RECEIVE NAILS & CONNECT TO RIM W/ 16d SINKER NAILS W/ SAME SPACING AS SILL PLATE NAILING OF S.W. ABOVE. TO AVOID THIS, SPAC'G OF SILL PLATE NAILING CAN BE INCREASED TO MAX. 6" O.C. WHEN USING A CONT. SILL PLATE @ SHEAR WALL ABOVE WITH SAME NUMBER OF NAILS REQ.
8. SIMPSON A35 (ALT. LS50 OR LTP4) EQUALLY SPACED PER SHEAR WALL SCHEDULE/PLANS (AT NON-SHEAR WALL @ 48" O.C. MAX.). WHEN PLYWOOD EXTENDS TO THE SIDE OF RIM, A35 IS NOT REQUIRED (SEE NOTE 16).
9. STAGG. SILL PLATE NAILING PER SHEAR WALL SCHEDULE.
10. TJI-230 OR EQUIVALENT W/ 2 5/16" WIDE FLANGE. USE HANGERS TO SUPPORT PERPENDICULAR JOISTS SPANNING GREATER THAN OR EQUAL TO 10'-0" (SEE NOTE 16).
11. 10d COMMON NAILS, SPACING SAME AS EDGE NAILS OF SHEAR WALL BELOW.
12. SOLID BLOCKING.
13. WHEN USING 1 1/4" WIDE RIM, INCREASE QUANTITIES OF B.N. 20% FOR 8d NAILS & 30% FOR 10d NAILS. (ALT. USE 1 3/4" MIN. RIM BOARD).
14. 16d STD. S.P. NAILS @ 16" O.C. MIN.
15. BLOCKING, SEE DETAIL 6/SN2.
16. IF THE INSTALLATION OF BOTTOM FLANGE NAILS/A35 TO TOP PLATES IS IN CONFLICT WITH STEEL STRAP ON TOP PLATES, USE MIN. 2X FULL DEPTH BLOCKING WITH LS50/LTP4 PER SHEARWALL SCHEDULE.

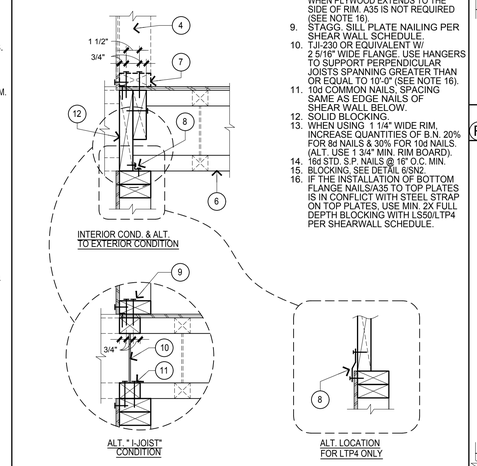

R SHEAR TRANSFER

D0016–120217 **7**

1. LS50 @ EACH CORNER SEE ITEM #12 FOR ALT.
2. LS50 FROM POST/MULTI STUD TO HDR. TOP & BOTTOM. ALT. (1) EACH FACE
3. TYP. 2X FLOAT @ EDGE OF OPENING.
4. FULL HT. POST OR MULTI STUD PER PLAN.
5. 2X TRIMMER W/ 16d @ 8" O.C. TO POST. IF THERE IS NO ROOM FOR TRIMMER, USE HUC (U.N.O.) HANGER TO CONNECT HDR. TO FULL HEIGHT POST & USE ST6236 TO CONNECT HDRS TOGETHER. CENTER STRAP @ POST.
6. 2X WINDOW SILL TYPICAL.
7. OPENING PER ARCHITECTURAL.
8. HEADER PER PLAN EXTEND TO POST.
9. (2) 2X TOP PLATE.
10. APPLY ST6236 CENTERED O/ POST IF WIDTH OF OPENING EXCEEDS 6'-0" & IF THERE IS NO TRIMMER.
11. 2X SILL PLATE TYPICAL (U.N.O.).
12. ALT. LOCATION OF LTP4 (1) EACH FACE OF EACH HDR TO POST.

NOTE:

USE APPROVED HANGER TO CONNECT HDR. TO POST IF THERE IS NO ROOM FOR TRIMMER.

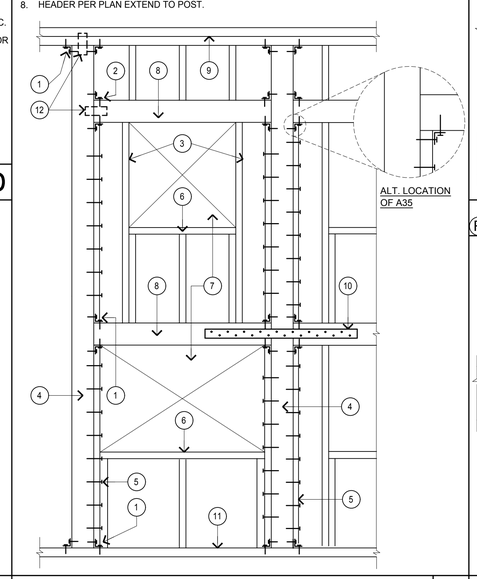

R WALL ELEVATION @ OPENING

GE50 100920 **8**

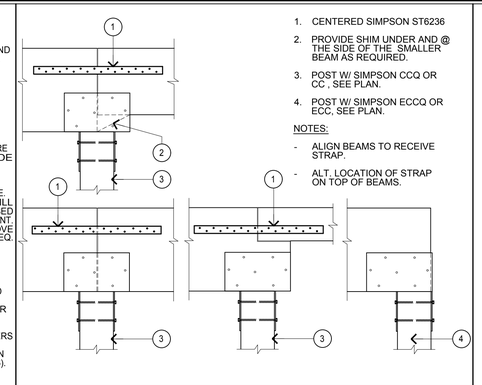

1. CENTERED SIMPSON ST6236
2. PROVIDE SHIM UNDER AND @ THE SIDE OF THE SMALLER BEAM AS REQUIRED.
3. POST W/ SIMPSON CCQ OR CC , SEE PLAN.
4. POST W/ SIMPSON ECCQ OR ECC, SEE PLAN.

NOTES:

- ALIGN BEAMS TO RECEIVE STRAP.
- ALT. LOCATION OF STRAP ON TOP OF BEAMS.

R CONNECTION DETAIL

D0043 100920 **3**

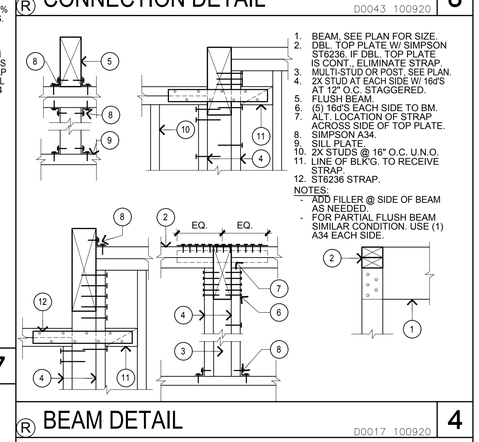

1. BEAM, SEE PLAN FOR SIZE.
2. DBL. TOP PLATE W/ SIMPSON ST6236, IF DBL. TOP PLATE IS CONT., ELIMINATE STRAP.
3. MULTI-STUD OR POST. SEE PLAN.
4. 2X STUD AT EACH SIDE W/ 16d'S AT 12" O.C. STAGGERED.
5. FLUSH BEAM.
6. (5) 16d'S EACH SIDE TO BM.
7. ALT. LOCATION OF STRAP ACROSS SIDE OF TOP PLATE.
8. SIMPSON A34.
9. SILL PLATE.
10. 2X STUDS @ 16" O.C. U.N.O.
11. LINE OF BLK'G. TO RECEIVE STRAP.
12. ST6236 STRAP.

NOTES:

- ADD FILLER @ SIDE OF BEAM AS NEEDED.
- FOR PARTIAL FLUSH BEAM SIMILAR CONDITION. USE (1) A34 EACH SIDE.

R BEAM DETAIL

D0017 100920 **4**

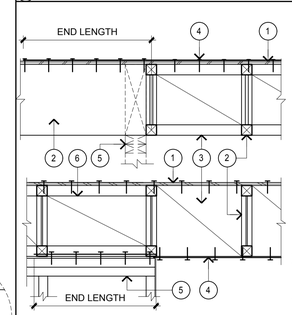

1. PLYWOOD SHEATHING W/ E.N. ALONG LINE OF BLOCKING.
2. TYPICAL JOIST, SEE PLAN.
3. LINE OF SOLID OR MIN 1 3/4" WIDE FULL HT. BLOCKING. SEE PLAN FOR NUMBER OF BAYS. (MIN. 4 BAYS).
4. SIMPSON STRAP CUT TO FIT OVER WALL OR BEAM. PER TABLE BELOW & @ ALL BAYS OF BLOCKING MIN. (3) NAILS PER BLOCKING. (2) ROWS OF NAILS EA. STRAP.
5. DOUBLE TOP PLATE OR BM.
6. USE MIN. 2X FULL HT. BLOCKING W/ LS50/LTP4 IF THE INSTALLATION OF A35 IS IN CONFLICT WITH THE STEEL STRAP ON TOP PLATES.

NOTES:

- USE DOUBLE BLOCKING FOR CONDITION B AND C.
- REFER TO DET. 17/SN2 FOR CS16 NAILING PATTERN.
- TJI BLKG (S) CAN BE USED WHEN STRAP IS APPLIED ON THE TOP.

	STRAP	END LENGTH	NAIL SIZE AND SPACING	CAPACITY*
A	CS16	3'-0"	8d BOX/SINKER AT 4 1/8"	1700#
B	(2) CS16	3'-0"	8d BOX/SINKER AT 4 1/8"	3400#
C	CMSTC16	6'-0"	16d SINKER AT 4 1/2"	4585#

*NAIL LATERAL VALUES BASED ON SPF/HF

R DRAG DETAIL

D0084–120217 **5**

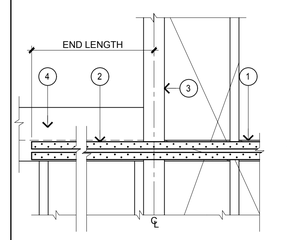

1. 2X BLKG. W/ LINE OF EDGE NAILING ALONG DRAG LINE MINIMUM (4) BAYS U.N.O.
2. SIMPSON CS16 W/ 8d SINKER NAILS AT 2 1/16" O.C.
3. STUD OR POST PER PLAN.
4. BEAM, DRAG TRUSS OR DBL. TOP PLATE.

NOTES:

- USE 2X FLAT BLOCKING FOR CONDITION "B" W/ MIN. 1 1/2" SPACE BETWEEN ROWS OF NAILS.
- LOCATE STRAP OVER PLWD. SHEAR PANEL. SEE PLAN FOR TYPE & LOCATION.
- REFER TO 17/SN2 FOR CS16 NAILING PATTERN.

	STRAP	CAPACITY	END LENGTH
A	(1)CS16	1700#	3'-0"
B	(2)CS16	3400#	3'-0"

R DRAG BEAM TO WALL DETAIL

GE2 100920 **6**

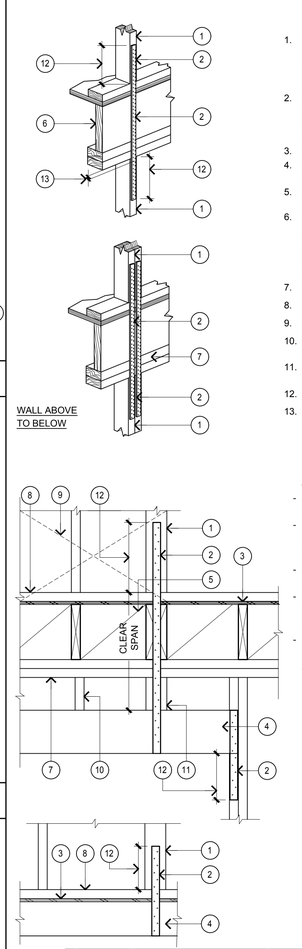

1. STUD, POST OR TRIMMER PER TABLE BELOW. DBL. STUDS & STRAPS @ CONDITION "B"&"C" PROVIDE EDGE NAILING OF SHEAR PANEL ALONG ALL STUDS.
2. REFER TO PLANS & TABLE BELOW FOR STRAP. # OF NAILS & END LENGTH AT EA. END. (2) ROWS OF NAILS EA. STRAP.
3. FLOOR SHTG. SEE PLAN.
4. MIN. 11 1/4" DEEP BM. OR HEADER. SEE PLAN.
5. LINE OF BLKG. UNDER SHEAR WALL.
6. SOLID RIM OR BLKG. SAME WIDTH AS POST ABV. & BLW. @ LOCATION OF STRAP. WHEN W/FLOOR TRUSS, PROVIDE WEB FILLERS AS NEEDED TO RECEIVE NAILING FROM STRAP.
7. DOUBLE TOP PLATE.
8. 2X SILL PLATE.
9. SEE PLAN FOR SHEAR WALL.
10. CRIPPLE WALL ABOVE HDR. WHERE OCCURS.
11. SOLID BLKG. UNDER POST OR STUDS ABOVE.
12. END LENGTH.
13. PROVIDE MIN. END DISTANCE OF 1 5/8" FOR 16d NAILS.

NOTES:

- ALL STRAPS ARE SIMPSON STRONG TIES.
- TOTAL LENGTH OF STRAP TO BE DETERMINED @ THE SITE BASED ON END LENGTH REQUIRED & CLEAR SPAN.
- ALL NAILS ARE SINKER OR BOX NAILS.
- SLIT CUT FLOOR SHEATHING TO RUN STRAP THROUGH @ INTERIOR CONDITION NO OVERCUT.
- LOCATE STRAP OVER PLWD. SHEAR PANEL & PROVIDE SHIM AS NECESSARY TO AVOID BENDING OF THE STRAP

	STRAP	STUD/ POST	# OF NAILS @ EA. END LENGTH	CAPACITY	END LENGTH
A	(1)CS16	2X4	(11)16d	1700#	13"
B	(2)CS16 **	(2)2X4	(11)16d P/STRAP	3400#	13"
C	(2)CS14 **	(2)2X4	(15)16d P/STRAP	4980#	18"
C	(3)CS14	4X6	(15)16d P/STRAP	7470#	18"
D	CMST14	4X4	(40)16d	6490#	38"
E	CMST12	4X6	(52)16d	9200#	48"
F	(2)CMST14	4X8	(40)16d P/STRAP	12980#	38"
G	(2)CMST12	6X8	(52)16d P/STRAP	18400#	48"
H	(4)CS14	4X8	(15)16d P/STRAP	9960#	18"

* CMST14 & CMST12 ARE ONLY APPLICABLE AT POST TO POST CONNECTION.

** AS AN ALT. TO B & C, USE D FOR POST TO POST CONDITION ONLY.

R HOLDOWN DETAIL

D0050–120217 **1**

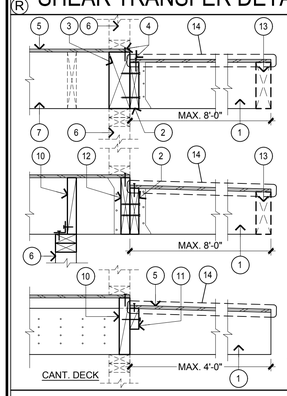

1. DECK W/SLOPE TO DRAIN OR FLOOR JOIST PER PLAN W/ APPROVED JOIST HANGER.
2. 2X LEDGER W/ (2) ROWS OF 1/4" SDS x 3" SCREWS @ 12" O.C.
3. BM. OR RIM JOIST PER PLAN AND PER DETAIL 7/SD3.
4. E.N. TYP.
5. PLYWOOD SHEATHING.
6. WALL OR BM. WHERE OCCURS.
7. FLOOR SYSTEM PER PLANS.
8. 2X NAIL SPACED DECKING WITH (2) 16d's PER CONN. PER ARCH. OR OTHER DETAILS.
9. CANT. JOIST PER PLAN W/ SLOPE TO DRAIN. NAIL TO SIDE OF FLOOR SYSTEM W/ (4) ROWS OF 16d's @ 4" O.C. (NOTE: BACK SPAN TO BE 2X LENGTH OF CANT. DECK U.N.O.)
10. 2X BLOCKING PER DETAIL 7/SD3
11. 2X4 BLOCKING W/ 16d's @ 4" O.C.
12. SUPPORT RIM JOIST FROM CANT. FLOOR JOIST W/ FULL HT. INVERTED "HU" HANGER.
13. FLUSH/DROP BEAM OR WALL PER PLAN.
14. SEE ALT. DECKING BELOW.

NOTE:

USE PLYWOOD FILLER @ I-JOIST TO RECEIVE HANGER OR OTHER MEMBERS.

R CONN. @ FLOOR CHANGE/DECK

GE40–110401 **14**

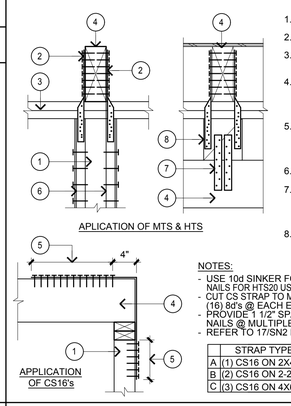

1. MULTI STUD OR POST.
2. STRAP TYPE, SEE TABLE.
3. DBL. TOP PLATE OR DROP BM. PER PLAN.
4. FLUSH BM/HDR PER PLAN. USE DETAIL 5/SD2 FOR CONNECTION OF BM/HDR TO POST (U.N.O.).
5. END LENGTH = 18". FOR SAWN LUMBER W/ SPACING @ 2 1/16" & 3'-6" FOR MF'G'R. PRODUCT W/ SPACING @ 4 1/8" O.C.
6. 2X STUD W/16 d's @ 6" O.C.
7. FOR (2) MTS12 USE (2) ST12, FOR (2) HTS20 USE (2) ST2122 AND FOR (4) HTS20 USE (2) ST6224.
8. MIN. 4X8 SOLID BLOCKING.

NOTES:

- USE 10d SINKER FOR MTS12 USE 10d COMMON NAILS FOR HTS20 USE 8d SINKER NAILS FOR CS16's.
- CUT CS STRAP TO MEET MIN. END LENGTH & USE MIN. (16) 8d's @ EACH END OF EACH STRAP.
- PROVIDE "1 1/2" SPACING BTWN ROWS OF NAILS @ MULTIPLE CS STRAPS.
- REFER TO 17/SN2 FOR CS16 NAILING PATTERN.

	STRAP TYPE	ALT.	CAPACITY
A	(1) CS16 ON 2X4	(2) MTS12	1705#
B	(2) CS16 ON 2-2X4	(2) HTS20	2666#
C	(3) CS16 ON 4X6	(4) HTS20	5115#

R HOLDOWN DETAIL

D0051–110801 **2**

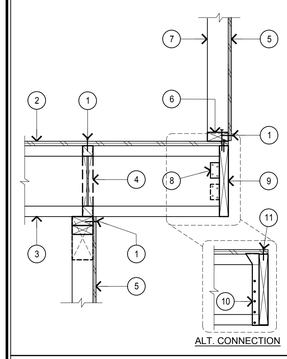

1. EDGE NAILING.
2. FLOOR SHEATHING.
3. FLOOR SYSTEM.
4. 2X MEMBER, 1 1/4" TIMBER STRAND OR I-JOIST BLOCKING PER PLAN. SEE DET. 7/SD3 FOR SHEAR TRANSFER. USE MIN. 2X BLOCKING OR 1 1/4" TIMBER STRAND FULL DEPTH BLOCKING W/ LS50/LTP4 IF THE INSTALLATION OF A35 OR NAILS W/ I-JOIST BLKG. IS IN CONFLICT W/ STEEL STRAP ON TOP PLATES.
5. SHEAR PANEL PER PLAN.
6. 2X SILL PLATE W/ NAILS PER PLAN.
7. 2X STUD WALL.
8. STAGGERED A35 RIM JOIST TO EVERY OTHER JOIST. PROVIDE WEB FILLER W/A35 NAILING.
9. 2x CONT. MEMBER, 1 1/4" TIMBERSTRAND OR LVL.
10. INVERTED IUT HANGER @ EVERY JOIST.
11. E.N. @ 3" O.C. MAX.

R SHEAR TRANSFER

GE56–120217 **15**

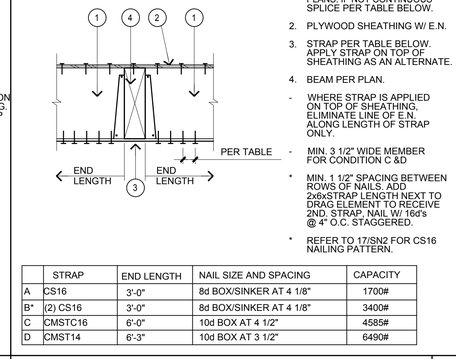

1. DRAG STRUT W/E.N. PER PLANS. IF NOT CONTINUOUS SPLICE PER TABLE BELOW.
2. PLYWOOD SHEATHING W/ E.N.
3. STRAP PER TABLE BELOW. APPLY STRAP ON TOP OF SHEATHING AS AN ALTERNATE.
4. BEAM PER PLAN.

- WHERE STRAP IS APPLIED ON TOP OF SHEATHING, ELIMINATE LINE OF E.N. ALONG LENGTH OF STRAP ONLY.
- MIN. 3 1/2" WIDE MEMBER FOR CONDITION C &D

* MIN. 1 1/2" SPACING BETWEEN ROWS OF NAILS. ADD 2x6xSTRAP LENGTH NEXT TO DRAG ELEMENT TO RECEIVE 2ND. STRAP, NAIL W/ 16d's @ 4" O.C. STAGGERED.

* REFER TO 17/SN2 FOR CS16 NAILING PATTERN.

	STRAP	END LENGTH	NAIL SIZE AND SPACING	CAPACITY
A	CS16	3'-0"	8d BOX/SINKER AT 4 1/8"	1700#
B*	(2) CS16	3'-0"	8d BOX/SINKER AT 4 1/8"	3400#
C	CMSTC16	6'-0"	10d BOX AT 4 1/2"	4585#
D	CMST14	6'-3"	10d BOX AT 3 1/2"	6490#

R DRAG DETAIL

D0042 100920 **11**

R STAIR DETAILS/ 1 & 2 FAMILY @ NON-COMMON AREA

D0002S–110801 **10**

GOUVIS engineering consulting group, inc.

4400 Campus Drive
Newport Beach
CA 92660

Newport Beach
tel 949.752.1612
fax 949.752.5321

Palm Springs
tel 760.323.5090

REGISTERED PROFESSIONAL ENGINEER MINE HOUSHMAND No. C042283 Exp. 3/31/20 CIVIL STATE OF CALIFORNIA

DATE SIGNED: 4/23/18

RESTRICTIVE NOTICE

THESE DESIGNS, DRAWINGS, AND SPECIFICATIONS ARE THE EXCLUSIVE PROPERTY OF GOUVIS ENGINEERING CONSULTING GROUP, AND ALL INFORMATION SHOWN IS CONFIDENTIAL TO ALL RECIPIENTS AND NO PART OF THESE DRAWINGS CAN BE COPIED, TRANSFERRED, OR REPRODUCED. NOR CAN ANY STRUCTURES BE BUILT FROM THEM WITHOUT WRITTEN CONSENT OF GOUVIS ENGINEERING CONSULTING GROUP

COPYRIGHT GOUVIS ENGINEERING CONSULTING GROUP 2008 ALL RIGHTS RESERVED

PROJECT:

The Colony
65

NOT FOR BID OR CONSTRUCTION

DEVELOPER:

ARCHITECT:

KPI

LOCATION:

Lancaster,
Los Angeles,
CA

REVISIONS

NO.	DATE	DESCRIPTION

SHEET NAME:

STRUCTURAL DETAILS

PROJECT NUMBER:

64797

ENGINEER: X

DRAFTER: X

ISSUED DATE:	PLOT DATE:
03/19/2018	04/23/2018

SHEET NUMBER:

SD-3

17 – NOTCH - SIDE VIEW 7

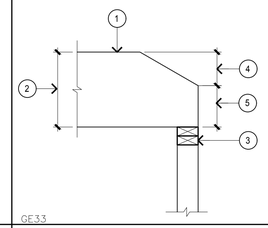

1. FLUSH BEAM NOTCHED AS SHOWN.
2. OVERALL BEAM DEPTH.
3. DBL. TOP PLATE, BEAM OR POST.
4. MATCH SLOPE OF ROOF
5. MIN. 5" FOR 14" DEEP BEAM & MIN. 4" FOR 11 7/8" DEEP BEAM. SEE PLANS HIGHER HEEL STAND IS REQ'D

NOTE:
DO NOT OVERCUT

CONNECTION DETAIL 4

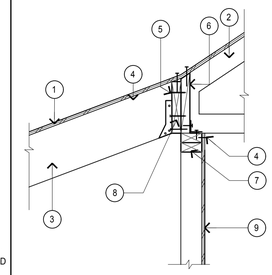

1. ROOF SHEATHING
2. TYPICAL TRUSS WHERE OCCURS W/ APPROVED HGR.
3. TYPICAL 2X RAFTER W/ (3) 16d's TOE NAILS FOR ROOF RAFTER W/ SPAN OF LESS THAN 4'-0". USE APPROVED HANGER FOR GREATER SPANS
4. E.N.
5. (2) ROWS OF 1/4" DIA.x4" LAG @ 16" O.C.
6. 2X BEVELED BLOCKING W/ E.N. AND A35's AT 48" O.C. U.N.O. PER PLAN. IF BLOCKING IS NOT BEVELED, SEE 13/SN2 FOR ALTERNATE
7. DBL. TOP PLATE
8. 2X LEDGER SAME SIZE AS R/R W/ 16d's AT 6" O.C. TO DBL TOP PLATE/BEAM AND AT 8" O.C. TO 2X BLOCKING
9. SHEAR PANEL, WHERE OCCURS

SHEAR TRANSFER 1

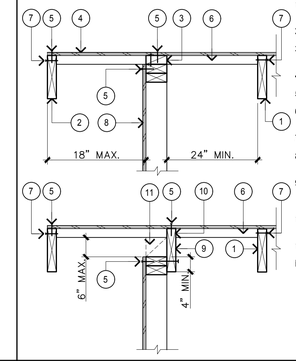

1. TYPICAL ROOF RAFTER PER PLAN.
2. 3X4 FASCIA BOARD.
3. 2X FLAT BLOCKS W/ 16d's @ 4" O.C. TO PLATE BELOW.
4. ROOF SHEATHING.
5. EDGE NAILING.
6. 2X FLAT OUTRIGGER @ 24" O.C.
7. (2) 16d's PER CONNECTION.
8. SEE PLAN FOR SHEAR PANEL TYPE AND LOCATION.
9. ALTERNATE COND. W/ ROOF RAFTER NEXT TO WALL W/16 d's @ 8" O.C. TO TOP PLATE.
10. NOTCH RAFTER @ OUTRIGGER DO NOT OVERCUT.
11. SHIM AS REQUIRED.

NOTE:
FOR FLAT CONCRETE TILE ROOFING, ALLOW ROOF RAFTERS TO FLOAT AND NAIL TO TOP PLATE AFTER ROOF IS LOADED TO AVOID UNEVEN RAFTER DEFLECTION.

18 – 8

1. (2) 2X CONT. TOP PLATE.
2. MAX. 7/8" SHIM AS REQUIRED.
3. SCREWS PER SCHEDULE. FOR 7/8"<SHIM BLOCK THK <1 3/4", USE 4 1/2" LONG SCREWS.
4. SHEAR PANEL TYPE 2 BETWEEN TOP PLATE & HEADER.
5. GARAGE HEADER PER PLAN. MULTIPLY HEADER IS ONLY PERMITTED FOR SEISMIC DESIGN CATEGORY A, B, & C.
6. SIMPSON STEEL STRONG WALL.
7. 2X KING STUD. USE PRESSURE TREATED MEMBER IF IN CONTACT W/ CONCRETE OR PROVIDE P.T. MUD SILL BELOW STUD.
8. JAMB WHERE OCCURS.
9. ST22 E/S, OR ST6224 ONE SIDE BEAM TO POST/TRIMMER.
10. (2)#5 TOP & (2)#5 BOTT. x4'-0" PAST HOLDOWN EA. WAY. EXTEND EXCESS INTO SIDE FOOTING.
11. POST/TRIMMER PER PLAN.
12. (4) 16d's KING STUD TO HEADER.
13. PRE-DRILLED HOLES.
14. STHD14 (U.N.O.).
15. 2X P.T.D.F. SILL PLATE.
16. 6" MIN. @ 12" & 15" PANELS & 8" MIN. FOR 18", 21" & 24".
17. HOLDOWN NUT
18. HOLDOWN BOLT PER "SSWAB" SCHED. WITH ADJUSTING NUT & WASHER.
19. WASHER PLATE W/ DOUBLE NUTS PER SIMPSON MANUFACTURER.
20. FOUNDATION PER PLAN. DEEPEN FOOTING AS REQUIRED TO ACHIEVE de & 3" MIN. CONC COVER. EXTEND "W/2" EA. WAY FROM HOLDOWNS.
21. TYP. A35 TOP & BOTT. OF K. STUD.
22. SHEAR REINF. PER SCHEDULE FOR EXT. FOOTING AND FOOTING STEM ONLY.
23. SDS 1/4"x3 1/2" SCREWS FOR MULTIPLE HEADER ONLY. 4 SCREWS TOTAL FOR SSW12 6 SCREWS TOT. FOR SSW15 TO SSW24.
24. 16d COMMON NAILS @ 16" O.C. ALONG EDGES FOR MULTIPLE HEADER ONLY.
25. EXT. FTG OR FTG STEM WHERE OCCURS.
26. 1 1/2" MIN. CLEAR OR EPOXY COATED SHEAR REINF. SHALL BE USED PER NOTE 22.

NOTE:
- ALL ANCHOR BOLTS ARE HIGH STRENGTH BOLTS.
- H=le-de, le PER SIMPSON "SSWAB".

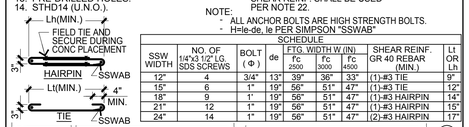

SCHEDULE

SSW WIDTH	NO. OF 1/4"x3 1/2" LG. SDS SCREWS	BOLT (Φ)	de	FTG. WIDTH W (IN). Fc 2500	Fc 3000	Fc 4500	SHEAR REINF. GR 40 REBAR (MIN.)	Lt OR Lh
12"	4	3/4"	13"	39"	36"	33"	(1)-#3 TIE	9"
15"	6	1"	19"	56"	51"	47"	(1)-#3 TIE	12"
18"	9	1'	19"	56"	51"	47"	(1)-#3 HAIRPIN	14"
21"	12	1"	19"	56"	51"	47"	(1)-#3 HAIRPIN	15"
24"	14	1"	19"	56"	51"	47"	(2)-#3 HAIRPIN	17"

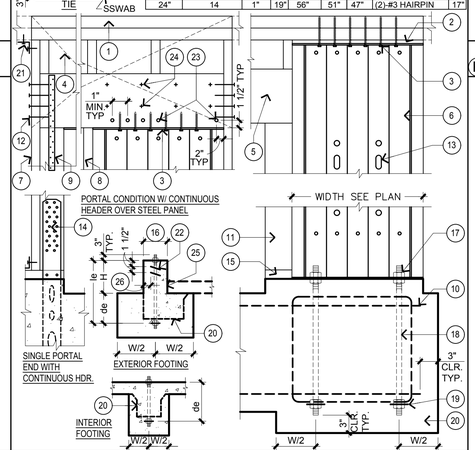

SHEAR TRANSFER 2

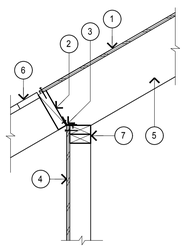

1. ROOF SHEATHING EXTENDED & EDGE NAILED TO BLOCKING.
2. FULL HEIGHT BLOCKING
3. A35, @ 24" O.C. AT NON-SHEAR WALL LOCATIONS SPACING AT TOP OF SHEAR WALL. PER SHEAR WALL SCHEDULE.
4. SHEAR PANEL PER PLAN.
5. ROOF RAFTERS PER PLAN.
6. STARTER BOARD WHERE OCCURS.
7. DBL TOP PLATE OR BM. PER PLAN

19 – 9

SIMPSON STEEL WALL 5

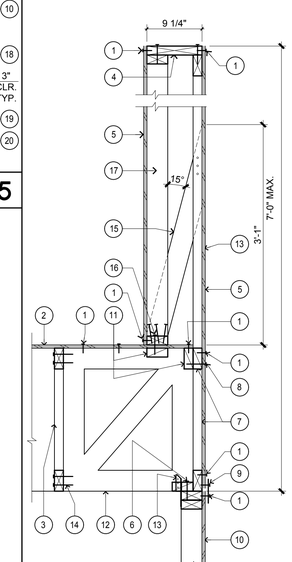

1. E.N.
2. ROOF SHEATHING
3. ROOF TRUSS PER PLAN
4. 2X10 TOP PLATE W/ 16d's NAILS @ 8" O.C TO 2X4 BOTTOM PLATE OR TRUSS TOP CHORD
5. SHEAR PANEL TYPE 1
6. MIN. 2X4 BLK'G W/ 16d's @ 4" O.C. TO TOP PLATE
7. SHEAR TRUSS TO TRANSFER 200 PLF FROM TOP CHORD TO BOTTOM U.N.O. DESIGNED BY TRUSS MANUF. W/ 2X4 WEB TRUSS BLK'G ALONG WITH ROOF LEVEL FOR POSITIVE NAILING AS SHOWN
8. 16d's SINKER NAILS @ 4" O.C.
9. SIMPSON LS50 AT 24" O.C.
10. SHEAR PANEL PER PLAN
11. 2X BLK'G
12. TRUSS PANEL BLK'G AT 48" O.C. TO TRANSFER 200 PLF FROM TOP CHORD TO BOTTOM DESIGNED BY TRUSS MANUF. W/ E.N. AT ROOF LEVEL
13. SIMP. H1 AT EACH TRUSS PANEL BLK'G TO TOP PLATE
14. 2 - 16d's AT TOP & BOTTOM
15. 2X4 DIAGONAL @ AT EACH VERTICAL WEB TRUSS (MAX. @ 24" O.C.) W/ (3) 16d's NAILS AT EACH END AS SHOWN
16. 2X SILL PLATE W/ 16d's NAILS AT 6" O.C.
17. 2X STUD WALL 16" O.C.

20 – 10 6 ROOF TRUSS TO WALL WITH PARAPET 3

GOUVIS engineering
consulting group, inc.
4400 Campus Drive
Newport Beach
CA 92660

Newport Beach
tel 949.752.1612
fax 949.752.5321

Palm Springs
tel 760.323.5090

REGISTERED PROFESSIONAL ENGINEER
MICHAEL HOUSMAN
No. C044283
Exp. 3/31/20
CIVIL
STATE OF CALIFORNIA

DATE SIGNED: 4/23/18

RESTRICTIVE NOTICE

THESE DESIGNS, DRAWINGS, AND SPECIFICATIONS ARE THE EXCLUSIVE PROPERTY OF GOUVIS ENGINEERING CONSULTING GROUP, AND ALL INFORMATION SHOWN IS CONFIDENTIAL TO ALL RECIPIENTS AND NO PART OF THESE DRAWINGS CAN BE COPIED, TRANSFERRED, OR REPRODUCED, NOR CAN ANY STRUCTURES BE BUILT FROM THEM WITHOUT WRITTEN CONSENT OF GOUVIS ENGINEERING CONSULTING GROUP

COPYRIGHT GOUVIS ENGINEERING CONSULTING GROUP 2008 ALL RIGHTS RESERVED

PROJECT:
The Colony
65

NOT FOR BID OR CONSTRUCTION

DEVELOPER:

ARCHITECT:
KPI

LOCATION:
Lancaster,
Los Angeles,
CA

REVISIONS

NO.	DATE	DESCRIPTION

SHEET NAME:
STRUCTURAL DETAILS

PROJECT NUMBER:
64797

ENGINEER: GE
DRAFTER: GE

ISSUED DATE: 03/19/2018
PLOT DATE: 04/23/2018

SHEET NUMBER:
SD-4

2016 Low-Rise Residential Mandatory Measures Summary

§ 150.0(j)2J:	**Interior Switches and Controls.** In bathrooms, garages, laundry rooms, and utility rooms, at least one luminaire in each of these spaces must be controlled by a vacancy sensor.
§ 150.0(k)2K:	**Interior Switches and Controls.** Dimmers or vacancy sensors must control all luminaires required to have light sources compliant with Reference Joint Appendix JA8, except luminaires in closets less than 70 square feet and luminaires in hallways.'
§ 150.0(k)2L:	**Interior Switches and Controls.** Undercabinet lighting must be switched separately from other lighting systems.
§ 150.0(k)3A:	**Residential Outdoor Lighting.** For single-family residential buildings, outdoor lighting permanently mounted to a residential building, or to other buildings on the same lot, must meet the requirement in item § 150.0(k)3Ai (ON and OFF switch) and the requirements in either item § 150.0(k)3Aii (photocell and motion sensor) or item § 150.0(k)3Aiii (photo control and automatic time switch control, astronomical time clock, or EMCS).
§ 150.0(k)3B:	**Residential Outdoor Lighting.** For low-rise multifamily residential buildings, outdoor lighting for private patios, entrances, balconies, and porches; and outdoor lighting for residential parking lots and residential carports with less than eight vehicles per site must comply with either § 150.0(k)3A or with the applicable requirements in §§ 110.9, 130.0, 130.2, 130.4, 140.7 and 141.0.
§ 150.0(k)3C:	**Residential Outdoor Lighting.** For low-rise residential buildings with four or more dwelling units, outdoor lighting not regulated by § 150.0(k)3B or § 150.0(k)3D must comply with the applicable requirements in §§ 110.9, 130.0, 130.2, 130.4, 140.7 and 141.0.
§ 150.0(k)3D:	**Residential Outdoor Lighting.** Outdoor lighting for residential parking lots and residential carports with a total of eight or more vehicles per site must comply with the applicable requirements in §§ 110.9, 130.0, 130.2, 130.4, 140.7, and 141.0.
§ 150.0(k)4:	**Internally illuminated address signs.** Internally illuminated address signs must comply with § 140.8; or must consume no more than 5 watts of power as determined according to § 130.0(c).
§ 150.0(k)5:	**Residential Garages for Eight or More Vehicles.** Lighting for residential parking garages for eight or more vehicles must comply with the applicable requirements for nonresidential garages in §§ 110.9, 130.0, 130.1, 130.4, 140.6, and 141.0.
§ 150.0(k)6A:	**Interior Common Areas of Low-rise Multi-Family Residential Buildings.** In a low-rise multifamily residential building where the total interior common area in a single building equals 20 percent or less of the floor area, permanently installed lighting for the interior common areas in that building must be high efficacy luminaires controlled by an occupant sensor.
§ 150.0(k)6B:	**Interior Common Areas of Low-rise Multi-Family Residential Buildings.** In a low-rise multifamily residential building where the total interior common area in a single building equals more than 20 percent of the floor area, permanently installed lighting in that building must: i. Comply with the applicable requirements in §§ 110.9, 130.0, 130.1, 140.6 and 141.0; and ii. Lighting installed in corridors and stairwells must be controlled by occupant sensors that reduce the lighting power in each space by at least 50 percent. The occupant sensors must be capable of turning the light fully on and off from all designed paths of ingress and egress.
Solar Ready Buildings:	
§ 110.10(a)1:	**Single Family Residences.** Single family residences located in subdivisions with ten or more single family residences and where the application for a tentative subdivision map for the residences has been deemed complete by the enforcement agency must comply with the requirements of § 110.10(b) through § 110.10(e).
§ 110.10(a)2:	**Low-rise Multi-Family Buildings.** Low-rise multi-family buildings must comply with the requirements of § 110.10(b) through § 110.10(d).
§ 110.10(b)1:	**Minimum Area.** The solar zone must have a minimum total area as described below. The solar zone must comply with access, pathway, smoke ventilation, and spacing requirements as specified in Title 24, Part 9 or other Parts of Title 24 or in any requirements adopted by a local jurisdiction. The solar zone total area must be comprised of areas that have no dimension less than 5 feet and are no less than 80 square feet each for buildings with roof areas less than or equal to 10,000 square feet or no less than 160 square feet each for buildings with roof areas greater than 10,000 square feet. For single family residences the solar zone must be located on the roof or overhang of the building and have a total area no less than 250 square feet. For low-rise multi-family buildings the solar zone must be located on the roof or overhang of the building, or on the roof or overhang of another structure located within 250 feet of the building, or on covered parking installed with the building project, and have a total area no less than 15 percent of the total roof area of the building excluding any skylight area.'
§ 110.10(b)2:	**Orientation.** All sections of the solar zone located on steep-sloped roofs must be oriented between 110 degrees and 270 degrees of true north.
§ 110.10(b)3A:	**Shading.** The solar zone must not contain any obstructions, including but not limited to: vents, chimneys, architectural features, and roof mounted equipment.'
§ 110.10(b)3B:	**Shading.** Any obstruction located on the roof or any other part of the building that projects above a solar zone must be located at least twice the distance, measured in the horizontal plane, of the height difference between the highest point of the obstruction and the horizontal projection of the nearest point of the solar zone, measured in the vertical plane.'
§ 110.10(b)4:	**Structural Design Loads on Construction Documents.** For areas of the roof designated as solar zone, the structural design loads for roof dead load and roof live load must be clearly indicated on the construction documents.
§ 110.10(c):	**Interconnection Pathways.** The construction documents must indicate: a location for inverters and metering equipment and a pathway for routing of conduit from the solar zone to the point of interconnection with the electrical service (for single family residences the point of interconnection will be the main service panel); and a pathway for routing of plumbing from the solar zone to the water-heating system.
§ 110.10(d):	**Documentation.** A copy of the construction documents or a comparable document indicating the information from § 110.10(b) through § 110.10(c) must be provided to the occupant.
§ 110.10(e)1:	**Main Electrical Service Panel.** The main electrical service panel must have a minimum busbar rating of 200 amps.
§ 110.10(e)2:	**Main Electrical Service Panel.** The main electrical service panel must have a reserved space to allow for the installation of a double pole circuit breaker for a future solar electric installation. The reserved space must be: positioned at the opposite (load) end from the input feeder location or main circuit location; and permanently marked as "For Future Solar Electric".

2016 Low-Rise Residential Mandatory Measures Summary

§ 150.0(m)13:	**Duct System Sizing and Air Filter Grille Sizing.** Space conditioning systems that use forced air ducts to supply cooling to an occupiable space must have a hole for the placement of a static pressure probe (PSPP), or a permanently installed static pressure probe (PSPP) in the supply plenum. The space conditioning system must also demonstrate airflow ≥ 350 CFM per ton of nominal cooling capacity through the return grilles, and an air-handling unit fan efficacy ≤ 0.58 W/CFM as confirmed by field verification and diagnostic testing, in accordance with Reference Residential Appendix RA3.3. This applies to both single zone central forced air systems and every zone for zonally controlled central forced air systems.'
§150.0(o):	**Ventilation for Indoor Air Quality.** All dwelling units must meet the requirements of ASHRAE Standard 62.2. Neither window operation nor continuous operation of central forced air system air handlers used in central fan integrated ventilation systems are permissible methods of providing whole-building ventilation.'
§ 150.0(o)1A:	**Field Verification and Diagnostic Testing.** Whole-building ventilation airflow must be confirmed through field verification and diagnostic testing, in accordance with Reference Residential Appendix RA3.7.
Pool and Spa Systems and Equipment Measures:	
§ 110.4(a):	**Certification by Manufacturers.** Any pool or spa heating system or equipment must be certified to have all of the following: a thermal efficiency that complies with the Appliance Efficiency Regulations; an on-off switch mounted outside of the heater that allows shutting off the heater without adjusting the thermostat setting; a permanent weatherproof plate or card with operating instructions; and must not use electric resistance heating.'
§ 110.4(b)1:	**Piping.** Any pool or spa heating equipment must be installed with at least 36 inches of pipe between the filter and the heater, or dedicated suction and return lines, or built-in or built-up connections to allow for future solar heating.
§ 110.4(b)2:	**Covers.** Outdoor pools or spas that have a heat pump or gas heater must have a cover.
§ 110.4(b)3:	**Directional inlets and time switches for pools.** Pools must have directional inlets that adequately mix the pool water, and a time switch that will allow all pumps to be set or programmed to run only during off-peak electric demand periods.
§ 110.5:	**Pilot Light.** Natural gas pool and spa heaters must not have a continuously burning pilot light.
§ 150.0(p):	**Pool Systems and Equipment Installation.** Residential pool systems or equipment must meet the specified requirements for pump sizing, flow rate, piping, filters, and valves.'
Lighting Measures:	
§ 110.9:	**Lighting Controls and Components.** All lighting control devices and systems, ballasts, and luminaires must meet the applicable requirements of § 110.9.'
§ 110.9(e):	**JA8 High Efficacy Light Sources.** To qualify as a JA8 high efficacy light source for compliance with § 150.0(k), a residential light source must be certified to the Energy Commission according to Reference Joint Appendix JA8.
§ 150.0(k)1A:	**Luminaire Efficacy.** All installed luminaires must be high efficacy in accordance with TABLE 150.0-A.
§ 150.0(k)1B:	**Blank Electrical Boxes.** The number of electrical boxes that are more than 5 feet above the finished floor and do not contain a luminaire or other device must be no greater than the number of bedrooms. These electrical boxes must be served by a dimmer, vacancy sensor control, or fan speed control.
§ 150.0(k)1C:	**Recessed Downlight Luminaires in Ceilings.** Luminaires recessed into ceilings must meet all of the requirements for: insulation contact (IC) labeling; air leakage; sealing; maintenance; and socket and light source as described in § 150.0(k)1C. A JA8-2016-E light source rated for elevated temperature must be installed by final inspection in all recessed downlight luminaires in ceilings.
§ 150.0(k)1D:	**Electronic Ballasts.** Ballasts for fluorescent lamps rated 13 watts or greater must be electronic and must have an output frequency no less than 20 kHz.
§ 150.0(k)1E:	**Night Lights.** Permanently installed night lights and night lights integral to installed luminaires or exhaust fans must be rated to consume no more than 5 watts of power per luminaire or exhaust fan as determined in accordance with § 130.0(c). Night lights do not need to be controlled by vacancy sensors.
§ 150.0(k)1F:	**Lighting Integral to Exhaust Fans.** Lighting integral to exhaust fans (except when installed by the manufacturer in kitchen exhaust hoods) must meet the applicable requirements of § 150.0(k).'
§ 150.0(k)1G:	**Screw based luminaires.** Screw based luminaires must not be recessed downlight luminaires in ceilings and must contain lamps that comply with Reference Joint Appendix JA8. Installed lamps must be marked with "JA8-2016" or "JA8-2016-E" as specified in Reference Joint Appendix JA8.'
§ 150.0(k)1H:	**Enclosed Luminaires.** Light sources installed in enclosed luminaires must be JA8 compliant and must be marked with "JA8-2016-E."
§ 150.0(k)2A:	**Interior Switches and Controls.** All forward phase cut dimmers used with LED light sources must comply with NEMA SSL 7A.
§ 150.0(k)2B:	**Interior Switches and Controls.** Exhaust fans must be switched separately from lighting systems.'
§ 150.0(k)2C:	**Interior Switches and Controls.** Luminaires must be switched with readily accessible controls that permit the luminaires to be manually switched ON and OFF.
§ 150.0(k)2D:	**Interior Switches and Controls.** Controls and equipment must be installed in accordance with manufacturer's instructions.
§ 150.0(k)2E:	**Interior Switches and Controls.** No control must bypass a dimmer or vacancy sensor function if the control is installed to comply with § 150.0(k).
§ 150.0(k)2F:	**Interior Switches and Controls.** Lighting controls must comply with the applicable requirements of § 110.9.
§ 150.0(k)2G:	**Interior Switches and Controls.** An energy management control system (EMCS) may be used to comply with dimmer requirements if it: functions as a dimmer according to § 110.9; meets the Installation Certificate requirements of § 130.4; meets the EMCS requirements of § 130.5f); and meets all other requirements in § 150.0(k)2.
§ 150.0(k)2H:	**Interior Switches and Controls.** An EMCS may be used to comply with vacancy sensor requirements in § 150.0(k) if it meets all of the following: it functions as a vacancy sensor according to § 110.9; the Installation Certificate requirements of § 130.4; the EMCS requirements of § 130.5f); and all other requirements in § 150.0(k)2.
§ 150.0(k)2I:	**Interior Switches and Controls.** A multiscene programmable controller may be used to comply with dimmer requirements in § 150.0(k) if it provides the functionality of a dimmer according to § 110.9, and complies with all other applicable requirements in § 150.0(k)2.

2016 Low-Rise Residential Mandatory Measures Summary

§ 150.0(h)3A:	**Clearances.** Installed air conditioner and heat pump outdoor condensing units must have a clearance of at least 5 feet from the outlet of any dryer vent.
§ 150.0(h)3B:	**Liquid Line Drier.** Installed air conditioner and heat pump systems must be equipped with liquid line filter driers if required, as specified by manufacturer's instructions.
§ 150.0(j)1:	**Storage Tank Insulation.** Unifired hot water tanks, such as storage tanks and backup storage tanks for solar water-heating systems, must have R-12 external insulation or R-16 internal insulation where the internal insulation R-value is indicated on the exterior of the tank.
§ 150.0(j)2A:	**Water piping and cooling system line insulation.** For domestic hot water system piping, whether buried or unburied, all of the following must be insulated according to the requirements of TABLE 120.3-A: the first 5 feet of hot and cold water pipes from the storage tank; all piping with a nominal diameter of 3/4 inch or larger; all piping associated with a domestic hot water recirculation system regardless of the pipe diameter; piping from the heating source to storage tank or between tanks; piping buried below grade; and all hot water pipes from the heating source to kitchen fixtures.'
§ 150.0(j)2B:	**Water piping and cooling system line insulation.** All domestic hot water pipes that are buried below grade must be installed in a water proof and non-crushable casing or sleeve.'
§ 150.0(j)2C:	**Water piping and cooling system line insulation.** Pipe for cooling system lines must be insulated as specified in § 150.0(j)2A. Distribution piping for steam and hydronic heating systems or hot water systems must meet the requirements in TABLE 120-3-A.'
§ 150.0(j)3:	**Insulation Protection.** Insulation must be protected from damage, including that due to sunlight, moisture, equipment maintenance, and wind.
§ 110.4(b)1:	**Insulation Protection.** Insulation exposed to weather must be installed with a cover suitable for outdoor service. For example, protected by aluminum, sheet metal, painted canvas, or plastic cover. The cover must be water retardant and provide shielding from solar radiation that can cause degradation of the material.
§ 150.0(j)3B:	**Insulation Protection.** Insulation covering chilled water piping and refrigerant suction piping located outside the conditioned space must have a Class I or Class II vapor retarder.
§ 150.0(n)1:	**Gas or Propane Systems.** Systems using gas or propane water heaters to serve individual dwelling units must include all of the following: a 120V electrical receptacle within 3 feet of the water heater; a Category III or IV vent, or a Type B vent with straight pipe between the outside termination and the space where the water heater is installed; a condensate drain that is no more than 2 inches higher than the base of the water heater, and allows natural draining without pump assistance; and a gas supply line with a capacity of at least 200,000 Btu/hr.
§ 150.0(n)2:	**Recirculating Loops.** Recirculating loops serving multiple dwelling units must meet the requirements of § 110.3c)5.
§ 150.0(n)3:	**Solar Water-heating Systems.** Solar water-heating systems and collectors must be certified and rated by the Solar Rating and Certification Corporation (SRCC) or by a listing agency that is approved by the Executive Director.
Ducts and Fans Measures:	
§ 110.8(d)3:	**Ducts.** Insulation installed on an existing space-conditioning duct must comply with § 604.0 of the California Mechanical Code (CMC). If a contractor installs the insulation, the contractor must certify to the customer, in writing, that the insulation meets this requirement.
§ 150.0(m)1:	**CMC Compliance.** All air-distribution system ducts and plenums must be installed, sealed, and insulated to meet the requirements of CMC §§ 601.0, 602.0, 603.0, 604.0, 605.0 and ANSI/SMACNA-006-2006 HVAC Duct Construction Standards Metal and Flexible 3rd Edition. Portions of supply-air and return-air ducts and plenums must be insulated to a minimum installed level of R-6.0 (or higher if required by CMC § 605.0) or a minimum installed level of R-4.2 when entirely in conditioned space as confirmed through field verification and diagnostic testing (RA3.1.4.3.8). Connections of metal ducts and inner core of flexible ducts must be mechanically fastened. Openings must be sealed with mastic, tape, or other duct-closure system that meets the applicable requirements of UL 181, UL 181A, or UL 181B or aerosol sealant that meets the requirements of UL 723. If mastic or tape is used to seal openings greater than ¼ inch, the combination of mastic and either mesh or tape must be used. Building cavities, support platforms for air handlers, and plenums designed or constructed with materials other than sealed sheet metal, duct board or flexible duct must not be used for conveying conditioned air. Building cavities and support platforms may contain ducts. Ducts installed in cavities and support platforms must not be compressed to cause reductions in the cross-sectional area of the ducts.'
§ 150.0(m)2:	**Factory-Fabricated Duct Systems.** Factory-fabricated duct systems must comply with applicable requirements for duct construction, connections, and closures; joints and seams of duct systems and their components must not be sealed with cloth back rubber adhesive duct tapes unless such tape is used in combination with mastic and draw bands.
§ 150.0(m)3:	**Field-Fabricated Duct Systems.** Field-fabricated duct systems must comply with applicable requirements for: pressure-sensitive tapes, mastics, sealants, and other requirements specified for duct construction.
§ 150.0(m)7:	**Backdraft Dampers.** All fan systems that exchange air between the conditioned space and the outside of the building must have backdraft or automatic dampers.
§ 150.0(m)8:	**Gravity Ventilation Dampers.** Gravity ventilating systems serving conditioned space must have either automatic or readily accessible, manually operated dampers in all openings to the outside, except combustion inlet and outlet air openings and elevator shaft vents.
§ 150.0(m)9:	**Protection of Insulation.** Insulation must be protected from damage, including that due to sunlight, moisture, equipment maintenance, and wind. Insulation exposed to weather must be installed with a cover suitable for outdoor service. For example, protected by aluminum, sheet metal, painted canvas, or plastic cover. Cellular foam insulation must be protected as above or painted with a coating that is water retardant and provides shielding from solar radiation.
§ 150.0(m)10:	**Porous Inner Core Flex Duct.** Porous inner core flex duct must have a non-porous layer between the inner core and outer vapor barrier.
§ 150.0(m)11:	**Duct System Sealing and Leakage Test.** When space conditioning systems use forced air duct systems to supply conditioned air to an occupiable space, the ducts must be sealed and duct leakage tested, as confirmed through field verification and diagnostic testing, in accordance with § 150.0(m)11and Reference Residential Appendix RA3.
§ 150.0(m)12:	**Air Filtration.** Mechanical systems that supply air to an occupiable space through ductwork exceeding 10 feet in length and through a thermal conditioning component, except evaporative coolers, must be provided with air filter devices that meet the design, installation, efficiency, pressure drop, and labeling requirements of § 150.0(m)12.

2016 Low-Rise Residential Mandatory Measures Summary

NOTE: Low-rise residential buildings subject to the Energy Standards must comply with all applicable mandatory measures, regardless of the compliance approach used. Review the respective section for more information. "Exceptions may apply."
(Original 08/2016)

Building Envelope Measures:	
§ 110.6(a)1:	**Air Leakage.** Manufactured fenestration, exterior doors, and exterior pet doors must limit air leakage to 0.3 cfm/ft² or less when tested per NFRC-400 or ASTM E283 or AAMA/WDMA/CSA 101/I.S.2/A440-2011.'
§ 110.6(a)5:	**Labeling.** Fenestration products must have a label meeting the requirements of § 10-111(a).
§ 110.6(b):	**Field fabricated exterior doors and fenestration** products must use U-factors and solar heat gain coefficient (SHGC) values from TABLES 110.6-A and 110.6-B for compliance and must be caulked and/or weatherstripped.'
§ 110.7:	**Air Leakage.** All joints, penetrations, and other openings in the building envelope that are potential sources of air leakage must be caulked, gasketed, or weather stripped.
§ 110.8(a):	**Insulation Certification by Manufacturers.** Insulation specified or installed must meet Standards for Insulating Material.
§ 110.8(g):	**Insulation Requirements for Heated Slab Floors.** Heated slab floors must be insulated per the requirements of § 110.8(g).
§ 110.8(i):	**Roofing Products Solar Reflectance and Thermal Emittance.** The thermal emittance and aged solar reflectance values of the roofing material must meet the requirements of § 110.8(i) when the installation of a cool roof is specified on the CF1R.
§ 110.8(j):	**Radiant Barrier.** A radiant barrier must have an emittance of 0.05 or less and be certified to the Department of Consumer Affairs.
§ 150.0(a):	**Ceiling and Rafter Roof Insulation.** Minimum R-22 insulation in wood-frame ceiling; or the weighted average U-factor must not exceed 0.043. Minimum R-19 or weighted average U-factor of 0.054 or less in a rafter roof alteration. Attic access doors must have permanently attached insulation using adhesive or mechanical fasteners. The attic access must be gasketed to prevent air leakage. Insulation must be installed in direct contact with a continuous roof or ceiling which is sealed to limit infiltration and exfiltration as specified in § 110.7, including but not limited to placing insulation either above or below the roof deck or on top of a drywall ceiling.'
§ 150.0(b):	**Loose-fill Insulation.** Loose fill insulation must meet the manufacturer's required density for the labeled R-value.
§ 150.0(c):	**Wall Insulation.** Minimum R-13 insulation in 2x4 inch wood framing wall or have a U-factor of 0.102 or less (R-19 in 2x6 or U-factor of 0.074 or less). Opaque non-framed assemblies must have an overall assembly U-factor not exceeding 0.102, equivalent to an installed value of R-13 in a wood framed assembly.'
§ 150.0(d):	**Raised-floor Insulation.** Minimum R-19 insulation in raised wood framed floor or 0.037 maximum U-factor.'
§ 150.0(f):	**Slab Edge Insulation.** Slab edge insulation must meet all of the following: have a water absorption rate, for the insulation material alone without facings, no greater than 0.3%; have a water vapor permeance no greater than 2.0 perm/inch; be protected from physical damage and UV light deterioration; and, when installed as part of a heated slab floor, meet the requirements of § 110.8(g).
§ 150.0(g)1:	**Vapor Retarder.** In Climate Zones 1-16, the earth floor of unvented crawl space must be covered with a Class I or Class II vapor retarder. This requirement also applies to controlled ventilation crawl space for buildings complying with the exception to § 150.0(d).
§ 150.0(g)2:	**Vapor Retarder.** In Climate Zones 14 and 16, a Class I or Class II vapor retarder must be installed on the conditioned space side of all insulation in all exterior walls, vented attics, and unvented attics with air-permeable insulation.
§ 150.0(q):	**Fenestration Products.** Fenestration, including skylights, separating conditioned space from unconditioned space or outdoors must have a maximum U-factor of 0.58; or the weighted average U-factor of all fenestration must not exceed 0.58.'
Fireplaces, Decorative Gas Appliances, and Gas Log Measures:	
§ 150.0(e)1A:	**Closable Doors.** Masonry or factory-built fireplaces must have a closable metal or glass door covering the entire opening of the firebox.
§ 150.0(e)1B:	**Combustion Intake.** Masonry or factory-built fireplaces must have a combustion outside air intake, which is at least six square inches in area and is equipped with a readily accessible, operable, and tight-fitting damper or combustion-air control device.'
§ 150.0(e)1C:	**Flue Damper.** Masonry or factory-built fireplaces must have a flue damper with a readily accessible control.'
§ 150.0(e)2:	**Pilot Light.** Continuous burning pilot lights and the use of indoor air for cooling a firebox jacket, when that indoor air is vented to the outside of the building, are prohibited.
Space Conditioning, Water Heating, and Plumbing System Measures:	
§ 110.0-§ 110.3:	**Certification.** Heating, ventilation and air conditioning (HVAC) equipment, water heaters, showerheads, faucets, and all other regulated appliances must be certified by the manufacturer to the Energy Commission.'
§ 110.2(a):	**HVAC Efficiency.** Equipment must meet the applicable efficiency requirements in TABLE 110.2-A through TABLE 110.2-K.'
§ 110.2(b):	**Controls for Heat Pumps with Supplementary Electric Resistance Heaters.** Heat pumps with supplementary electric resistance heaters must have controls that prevent supplementary heater operation when the heating load can be met by the heat pump alone; and in which the cut-on temperature for compression heating is higher than the cut-on temperature for supplementary heating, and the cut-off temperature for compression heating is higher than the cut-off temperature for supplementary heating.'
§ 110.2(c):	**Thermostats.** All unitary heating or cooling systems not controlled by a central energy management control system (EMCS) must have a setback thermostat.'
§ 110.3(c)5:	**Water Heating Recirculation Loops Serving Multiple Dwelling Units.** Water heating recirculation loops serving multiple dwelling units must meet the air release valve, backflow prevention, pump priming, pump isolation valve, and recirculation loop connection requirements of § 110.3(c)5.
§ 110.3(c)7:	**Isolation Valves.** Instantaneous water heaters with an input rating greater than 6.8 kBTUhr (2 kW) must have isolation valves with hose bibbs or other fittings on both cold water and hot water lines of water heating systems to allow for water tank flushing when the valves are closed.
§ 110.5:	**Pilot Lights.** Continuously burning pilot lights are prohibited for natural gas: fan-type central furnaces; household cooking appliances (appliances without an electrical supply voltage connection with pilot lights that consume less than 150 Btu/hr are exempt); and pool and spa heaters.'
§ 150.0(h)1:	**Building Cooling and Heating Loads.** Heating and/or cooling loads are calculated in accordance with ASHRAE Handbook, Equipment Volume, Applications Volume, and Fundamentals Volume; SMACNA Residential Comfort System Installation Standards Manual; or ACCA Manual J using design conditions specified in § 150.0(h)2.

TITLE 24 SHEET INDEX

NO.	SHEET	DESCRIPTION
1	T24-MM	MANDATORY MEASURES FORMS
2	T24-1	ENERGY COMPLIANCE FORMS - PLAN 1
3	T24-2	ENERGY COMPLIANCE FORMS - PLAN 2
4	T24-3	ENERGY COMPLIANCE FORMS - PLAN 3

GOUVIS engineering consulting group, inc.®

15 Studebaker
Irvine
CA 92618

Irvine
tel 949.752.1612
fax 949.752.5321

Palm Springs
tel 760.323.5090

RESTRICTIVE NOTICE

THESE DESIGNS, DRAWINGS, AND SPECIFICATIONS ARE THE EXCLUSIVE PROPERTY OF GOUVIS ENGINEERING CONSULTING GROUP, AND ALL INFORMATION SHOWN IS CONFIDENTIAL TO ALL RECIPIENTS AND NO PART OF THESE DRAWINGS CAN BE COPIED, TRANSFERRED, OR REPRODUCED. NOR CAN ANY STRUCTURES BE BUILT FROM THEM WITHOUT WRITTEN CONSENT OF GOUVIS ENGINEERING CONSULTING GROUP

COPYRIGHT GOUVIS ENGINEERING CONSULTING GROUP 2008 ALL RIGHTS RESERVED

PROJECT:
The Colony 65

DEVELOPER:
Imagine Development

ARCHITECT:
KPI

LOCATION:
Lancaster
CA

REVISIONS

NO.	DATE	DESCRIPTION

SHEET NAME:
TITLE 24 FORMS MANDATORY MEASURES

PROJECT NUMBER:
64797

ENGINEER:
DRAFTER:

ISSUED DATE:	PLOT DATE:
03/19/2018	04/23/2018

SHEET NUMBER:
T24-MM

HVAC - DISTRIBUTION SYSTEMS

01	02	03	04	05	06	07
Name	Type	Duct Leakage	Insulation R-value	Duct Location	Bypass Duct	HERS Verification
Air Distribution System 1	Ducts/Attic	Specified Lower Leakage Target	6	Attic	None	Air Distribution System 1-hers-dist

HVAC DISTRIBUTION - HERS VERIFICATION

01	02	03	04	05	06	07	08
Name	Duct Leakage Verification	Duct Leakage Target (%)	Verified Duct Location	Verified Duct Design	Buried Ducts	Deeply Buried Ducts	Low-leakage Air Handler
Air Distribution System 1-hers-dist	Required	5.0	Not Required	Not Required	Not Required	Not Required	Required

HVAC - FAN SYSTEMS

01	02	03	04
Name	Type	Fan Power (Watts/CFM)	HERS Verification
HVAC Fan 1	Single Speed PSC Furnace Fan	0.58	HVAC Fan 1-hers-fan

HVAC FAN SYSTEMS - HERS VERIFICATION

01	02	03
Name	Verified Fan Watt Draw	Required Fan Efficiency (Watts/CFM)
HVAC Fan 1-hers-fan	Required	0.58

IAQ (Indoor Air Quality) FANS

01	02	03	04	05	06
Dwelling Unit	IAQ CFM	IAQ Watts/CFM	IAQ Fan Type	IAQ Recovery Effectiveness(%)	HERS Verification
SFam IAQ/VentRpt	44	0.25	Default	0	Required

This Certificate of Compliance is not registered

OPAQUE SURFACES

01	02	03	04	05	06	07	08
Name	Zone	Construction	Azimuth	Orientation	Gross Area (ft^2)	Window & Door Area (ft^2)	Tilt (deg)
N Exterior Wall 2x4	Living Area	R-15 Wall	0	Front	90	48	90
E Exterior Wall 2x4	Living Area	R-15 Wall	90	Left	500	105	90
S Exterior Wall 2x4	Living Area	R-15 Wall	180	Back	300	88.5	90
W Exterior Wall 2x4	Living Area	R-15 Wall	270	Right	463.3	71	90
Interior Surface	Living Area>>__Garage__	R-11 Party Wall	n/a	n/a	256.7	0	n/a
Roof	Living Area	R-38 Roof Attic	n/a	n/a	1365	n/a	n/a
N Exterior Wall	__Garage__	R-0 Wall	0	Front	210	0	90
E Exterior Wall	__Garage__	R-0 Wall	90	Left	170	0	90
W Exterior Wall	__Garage__	R-0 Wall	270	Right	206.7	0	90
Roof 2	__Garage__	R-0 Roof Attic	n/a	n/a	435	n/a	n/a

ATTIC

01	02	03	04	05	06	07	08
Name	Construction	Type	Roof Rise	Roof Reflectance	Roof Emittance	Radiant Barrier	Cool Roof
Attic Living Area	Attic Roof/Living Area	Ventilated	5	0.3	0.75	No	Yes
Attic __Garage__	Attic Garage Roof Cons	Ventilated	5	0.1	0.85	No	No

GENERAL INFORMATION

01	Project Name	The Colony 65 Plan 1	
02	Calculation Description	Title 24 Analysis	
03	Project Location	__	
04	City	Lancaster	05 Standards Version: Compliance 2017
06	Zip Code		07 Compliance Manager Version: BEMCmpMgr 2016.3.0 (1016 SP2)
08	Climate Zone	CZ14	09 Software Version: EnergyPro 7.2
10	Building Type	Single Family	11 Front Orientation (deg/Cardinal): Cardinal
12	Project Scope	Newly Constructed	13 Number of Dwelling Units: 1
14	Total Cond. Floor Area (ft^2)	1365	15 Number of Zones: 1
16	Slab Area (ft^2)	1365	17 Number of Stories: 1
18	Addition Cond. Floor Area(ft^2)	n/a	19 Natural Gas Available: Yes
20	Addition Slab Area (ft^2)	n/a	21 Glazing Percentage (%): 21.1%

COMPLIANCE RESULTS

01	Building Complies with Computer Performance
02	This building incorporates features that require field testing and/or verification by a certified HERS rater under the supervision of a CEC-approved HERS provider.
03	This building incorporates one or more Special Features shown below

DOCUMENTATION AUTHOR'S DECLARATION STATEMENT

1. I certify that this Certificate of Compliance documentation is accurate and complete.

Documentation Author Name:	Documentation Author Signature:
Company: Gouvis Engineering Consulting Group, Inc.	Signature Date: 4/20/2018
Address:	CEA/HERS Certification Identification (if applicable):
City/State/Zip:	Phone:

RESPONSIBLE PERSON'S DECLARATION STATEMENT

I certify the following under penalty of perjury, under the laws of the State of California:
1. I am eligible under Division 3 of the Business and Professions Code to accept responsibility for the building design identified on this Certificate of Compliance.
2. I certify that the energy features and performance specifications identified on this Certificate of Compliance conform to the requirements of Title 24, Part 1 and Part 6 of the California Code of Regulations.
3. The building design features or system design features identified on this Certificate of Compliance are consistent with the information provided on other applicable compliance documents, worksheets, calculations, plans and specifications submitted to the enforcement agency for approval with this building permit application.

Responsible Designer Name:	Responsible Designer Signature:
Company:	Date Signed:
Address:	License:
City/State/Zip:	Phone:

FENESTRATION / GLAZING

01	02	03	04	05	06	07	08	09	10
Name	Type	Surface (Orientation-Azimuth)	Width (ft)	Height (ft)	Multiplier	Area (ft^2)	U-factor	SHGC	Exterior Shading
6080 SLD	Window	N Exterior Wall 2x4 (Front-0)	6.0	8.0	1	48.0	0.30	0.20	Insect Screen (default)
(2) 4650 SL	Window	E Exterior Wall 2x4 (Left-90)	----	----	1	45.0	0.30	0.20	Insect Screen (default)
(3) 4050 SL	Window	E Exterior Wall 2x4 (Left-90)	----	----	1	60.0	0.30	0.20	Insect Screen (default)
(2) 3050 SH	Window	S Exterior Wall 2x4 (Back-180)	----	----	1	30.0	0.30	0.20	Insect Screen (default)
(2) 2646 SH	Window	S Exterior Wall 2x4 (Back-180)	----	----	1	22.5	0.30	0.20	Insect Screen (default)
2060 FX	Window	S Exterior Wall 2x4 (Back-180)	----	----	1	12.0	0.30	0.20	Insect Screen (default)
3050 SH	Window	W Exterior Wall 2x4 (Right-270)	----	----	1	15.0	0.30	0.20	Insect Screen (default)
3050 SH 2	Window	W Exterior Wall 2x4 (Right-270)	----	----	1	15.0	0.30	0.20	Insect Screen (default)
2040 SH	Window	W Exterior Wall 2x4 (Right-270)	----	----	1	8.0	0.30	0.20	Insect Screen (default)
4020 SL	Window	W Exterior Wall 2x4 (Right-270)	----	----	1	8.0	0.30	0.20	Insect Screen (default)
5050 SL	Window	W Exterior Wall 2x4 (Right-270)	----	----	1	25.0	0.30	0.20	Insect Screen (default)

OPAQUE DOORS

01	02	03	04
Name	Side of Building	Area (ft^2)	U-factor
3080 SC DR	S Exterior Wall 2x4	24.0	0.50

OVERHANGS AND FINS

01	02	03	04	05	06	07	08	09	10	11	12	13	14
	Overhang					Left Fin				Right Fin			
Window	Depth	Dist Up	Left Extent	Right Extent	Flap Ht.	Depth	Top Up	Dist L	Bot Up	Depth	Top Up	Dist R	Bot Up
6080 SLD	15	1.5	1.5	1.5	0	0	0	0	0	0	0	0	0

ENERGY USE SUMMARY

Energy Use (kTDV/ft^2-yr)	Standard Design	Proposed Design	Compliance Margin	Percent Improvement
Space Heating	16.48	16.42	0.06	0.4%
Space Cooling	40.18	38.28	1.90	4.7%
IAQ Ventilation	1.47	1.47	0.00	0.0%
Water Heating	12.37	10.57	1.80	14.6%
PV Credit	----	0.00	0.00	----
North Facing Compliance Total	**70.50**	**66.74**	**3.76**	**5.3%**
Space Heating	16.48	16.89	-0.41	-2.5%
Space Cooling	40.18	32.64	7.54	18.8%
IAQ Ventilation	1.47	1.47	0.00	0.0%
Water Heating	12.37	10.57	1.80	14.6%
PV Credit	----	0.00	0.00	----
East Facing Compliance Total	**70.50**	**61.57**	**8.93**	**12.7%**
Space Heating	16.48	19.90	-3.42	-20.8%
Space Cooling	40.18	37.53	2.65	6.6%
IAQ Ventilation	1.47	1.47	0.00	0.0%
Water Heating	12.37	10.57	1.80	14.6%
PV Credit	----	0.00	0.00	----
South Facing Compliance Total	**70.50**	**69.47**	**1.03**	**1.5%**
Space Heating	16.48	18.04	-1.56	-9.5%
Space Cooling	40.18	31.17	9.01	22.4%
IAQ Ventilation	1.47	1.47	0.00	0.0%
Water Heating	12.37	10.57	1.80	14.6%
PV Credit	----	0.00	0.00	----
West Facing Compliance Total	**70.50**	**61.25**	**9.25**	**13.1%**

OPAQUE SURFACE CONSTRUCTIONS

01	02	03	04	05	06	07
Construction Name	Surface Type	Construction Type	Framing	Total Cavity R-value	Winter Design U-factor	Assembly Layers
R-0 Wall	Exterior Walls	Wood Framed Wall	2x4 @ 16 in. O.C.	none	0.361	• Inside Finish: Gypsum Board • Cavity / Frame: no insul. / 2x4 • Exterior Finish: 3 Coat Stucco
R-0 Roof Attic	Ceilings (below attic)	Wood Framed Ceiling	2x4 @ 16 in. O.C.	none	0.472	• Inside Finish: Gypsum Board • Cavity / Frame: no insul. / 2x4
Attic Garage Roof Cons	Attic Roofs	Wood Framed Ceiling	2x4 Top Chord of Roof Truss @ 24 in. O.C.	none	0.644	• Inside Finish: Gypsum Board • Cavity / Frame: no insul. / 2x4 Top Chrd • Roof Deck: Wood Sidling/sheathing/decking • Roofing: Light Roof (Asphalt Shingle)
Attic Roof,Living Area	Attic Roofs	Wood Framed Ceiling	2x4 Top Chord of Roof Truss @ 24 in. O.C.	R 13	0.072	• Around Roof Joists: R-0.0 insul. • Cavity / Frame: R-13.0 / 2x4 Top Chrd • Roof Deck: Wood Sidling/sheathing/decking • Tile Gap: present • Roofing: 10 PSF (RoofTile)
R-15 Wall	Exterior Walls	Wood Framed Wall	2x4 @ 16 in. O.C.	R 15	0.095	• Inside Finish: Gypsum Board • Cavity / Frame: R-15 / 2x4 • Exterior Finish: 3 Coat Stucco
R-38 Roof Attic	Ceilings (below attic)	Wood Framed Ceiling	2x4 @ 16 in. O.C.	R 38	0.025	• Inside Finish: Gypsum Board • Cavity / Frame: R-9.7 / 2x4 • Over Ceiling Joists: R-28.9 insul.
R-11 Party Wall	Interior Walls	Wood Framed Wall	2x4 @ 16 in. O.C.	R 11	0.099	• Inside Finish: Gypsum Board • Cavity / Frame: R-11 / 2x4 • Other Side Finish: Gypsum Board

SLAB FLOORS

01	02	03	04	05	06	07
Name	Zone	Area (ft^2)	Perimeter (ft)	Edge Insul. R-value & Depth	Carpeted Fraction	Heated
Slab-on-Grade	Living Area	1365	0.1	None	0.8	No
Slab-on-Grade 2	__Garage__	435	0.1	None	0	No

BUILDING ENVELOPE - HERS VERIFICATION

01	02	03	04
Quality Insulation Installation (QII)	Quality Installation of Spray Foam Insulation	Building Envelope Air Leakage	CFM50
Required	Not Required	Not Required	n/a

ENERGY DESIGN RATING

Energy Design Rating (EDR) is an alternate way to express the energy performance of a building using a scoring system where 100 represents the energy performance of the Residential Energy Services (RESNET) reference home characterization of the 2006 International Energy Conservation Code (IECC) with California modeling assumptions. A score of zero represents the energy performance of a building that combines high levels of energy efficiency with renewable generation to"zero out" its TDV energy. Because EDR includes consideration of renewable energy, EDR can go below 0. EDR does not include non-regulated loads (appliances and consumer electronics), it is not used to show compliance with Part 6 but may instead be used by local jurisdictions pursuing local ordinances under Title 24, Part 11 (CALGreen).
As a Standard Design building under the 2016 Building Energy Efficiency Standards is significantly more efficient than the baseline EDR building, the EDR of the Standard Design building is provided for information. Similarly, the EDR score of the Proposed Design is provided separately from the EDR value of installed PV so that the effects of efficiency and renewable energy can both be seen.

	EDR of Standard Efficiency	EDR of Proposed Efficiency	EDR Value of Proposed PV + Battery	Final Proposed EDR
North	54.2	52.7	0.0	52.7
East	54.2	50.5	0.0	50.5
South	54.2	53.9	0.0	53.9
West	54.2	50.4	0.0	50.4

☐	Design meets Tier 1 requirement of 15% or greater code compliance margin [CALGreen A4.203.1.2.1] and QII verification prerequisite.
☐	Design meets Tier 2 requirement of 30% or greater code compliance margin [CALGreen A4.203.1.2.2] and QII verification prerequisite.
☐	Design meets Zero Net Energy (ZNE) Design Designation requirement for Single Family in climate zone CZ14 (Palmdale) [CALGreen A4.203.1.2.3] including on-site photovoltaic (PV) renewable energy generation sufficient to achieve a Final Energy Design Rating (EDR) of zero or less. The PV System must be verified.

Notes:
- **Excess PV Generation EDR Credit: Bypassing PV size limit may violate Net Energy Metering (NEM) rules**

REQUIRED SPECIAL FEATURES

The following are features that must be installed as condition for meeting the modeled energy performance for this computer analysis.

- **Cool roof**
- **Insulation below roof deck**
- **Window overhange and/or fins**

WATER HEATING SYSTEMS

01	02	03	04	05	06
Name	System Type	Distribution Type	Water Heater	Number of Heaters	Solar Fraction (%)
DHW Sys 1	DHW	Standard	DHW Heater 1 (1)	1	0%

WATER HEATERS

01	02	03	04	05	06	07	08	09	10	11	12
Name	Heater Element Type	Tank Type	Number of Units	Tank Volume (gal)	Uniform Energy Factor / Energy Factor / Efficiency	Input Rating / Pilot / Thermal Efficiency	Tank Insulation R-value (hr/ft-k)	Standby Loss / Recovery Eff	First Hour Rating / Flow Rate	NEEA Heat Pump Brand / Model / Other	Tank Location or Ambient Condition
DHW Heater 1	Gas	Small Instantaneous	1	0	0.96 EF	199,000 Btu/hr	R-0/R-0	n/a	n/a	n/a	n/a

SPACE CONDITIONING SYSTEMS

01	02	03	04	05	06
SC Sys Name	System Type	Heating Unit Name	Cooling Unit Name	Fan Name	Distribution Name
3 Ton1	Other Heating and Cooling System	Heating Component 1	Cooling Component 1	HVAC Fan 1	Air Distribution System 1

HVAC - HEATING UNIT TYPES

01	02	03	04
Name	System Type	Number of Units	Efficiency
Heating Component 1	Ceil/Furnace	1	96.5 AFUE

HVAC - COOLING UNIT TYPES

01	02	03	04	05	06	07	08
			Efficiency				
Name	System Type	Number of Units	EER	SEER	Zonally Controlled	Compressor Type	HERS Verification
Cooling Component 1	Split/Air Cond	1	13	15.5	Not Zonal	Single Speed	Cooling Component 1-hers-cool

HVAC COOLING - HERS VERIFICATION

01	02	03	04	05	06
Name	Verified Airflow	Airflow Target	Verified EER	Verified SEER	Verified Refrigerant Charge
Cooling Component 1-hers-cool	Required	350	Required	Required	Required

HERS FEATURE SUMMARY

The following is a summary of the features that must be field-verified by a certified HERS Rater as a condition for meeting the modeled energy performance for this computer analysis. Additional detail is provided in the building components tables below.

Building-level Verifications:
- **High quality insulation installation (QII)**
- **IAQ mechanical ventilation**

Cooling System Verifications:
- **Minimum Airflow**
- **Verified EER**
- **Verified SEER**
- **Verified Refrigerant Charge**
- **Fan Efficacy Watts/CFM**

HVAC Distribution System Verifications:
- **-- None --**
- **Low-leakage Air Handling Unit**

Domestic Hot Water System Verifications:
- **-- None --**

BUILDING - FEATURES INFORMATION

01	02	03	04	05	06	07
Project Name	Conditioned Floor Area (ft^2)	Number of Dwelling Units	Number of Bedrooms	Number of Zones	Number of Ventilation Cooling Systems	Number of Water Heating Systems
The Colony 65 Plan 1	1365	1	3	1	0	1

ZONE INFORMATION

01	02	03	04	05	06	07
Zone Name	Zone Type	HVAC System Name	Zone Floor Area (ft^2)	Avg. Ceiling Height	Water Heating System 1	Water Heating System 2
Living Area	Conditioned	3 Ton1	1365	10	DHW Sys 1	n/a

GOUVIS engineering consulting group, inc.
15 Studebaker
Irvine
CA 92618

Irvine
tel 949.752.1612
fax 949.752.5321

Palm Springs
tel 760.323.5090

RESTRICTIVE NOTICE

THESE DESIGNS, DRAWINGS, AND SPECIFICATIONS ARE THE EXCLUSIVE PROPERTY OF GOUVIS ENGINEERING CONSULTING GROUP, AND ALL INFORMATION SHOWN IS CONFIDENTIAL TO ALL RECIPIENTS AND NO PART OF THESE DRAWINGS CAN BE COPIED, TRANSFERRED, OR REPRODUCED, NOR CAN ANY STRUCTURES BE BUILT FROM THEM WITHOUT WRITTEN CONSENT OF GOUVIS ENGINEERING CONSULTING GROUP

COPYRIGHT GOUVIS ENGINEERING CONSULTING GROUP 2008 ALL RIGHTS RESERVED

PROJECT:
The Colony 65

DEVELOPER:
Imagine Development

ARCHITECT:
KPI

LOCATION:
Lancaster
CA

REVISIONS

NO.	DATE	DESCRIPTION

SHEET NAME:
TITLE 24 ENERGY COMPLIANCE FORMS PLAN 1

PROJECT NUMBER:
64797

ENGINEER:

DRAFTER:

ISSUED DATE: 03/19/2018
PLOT DATE: 04/23/2018

SHEET NUMBER:
T24-1

GENERAL INFORMATION

01	Project Name	The Colony 65 Plan 2	
02	Calculation Description	Title 24 Analysis	
03	Project Location	_	
04	City	Lancaster	
05	Zip Code	_	
06	Climate Zone	CZ14	
07	Building Type	Single Family	
08	Project Scope	Newly Constructed	
09	Total Cond. Floor Area (ft^2)	1498	
10	Slab Area (ft^2)	1498	
11	Addition Cond. Floor Area(ft^2)	n/a	
12	Addition Slab Area (ft^2)	n/a	
13	Standards Version	Compliance 2017	
14	Compliance Manager Version	BEMCmpMgr 2016.3.0 (1016 SP2)	
15	Software Version	EnergyPro 7.2	
16	Building Type	Single Family	
17	Front Orientation (deg/Cardinal)	Cardinal	
18	Number of Dwelling Units	1	
19	Number of Zones	1	
20	Number of Stories	1	
21	Natural Gas Available	Yes	
22	Glazing Percentage (%)	20.7%	

COMPLIANCE RESULTS

01	Building Complies with Computer Performance
02	This building incorporates features that require field testing and/or verification by a certified HERS rater under the supervision of a CEC-approved HERS provider.
03	This building incorporates one or more Special Features shown below

ENERGY USE SUMMARY

Energy Use (kTDV/ft^2-yr)	Standard Design	Proposed Design	Compliance Margin	Percent Improvement
Space Heating	17.55	16.46	1.09	6.2%
Space Cooling	40.77	38.34	2.43	6.0%
IAQ Ventilation	1.61	1.61	0.00	0.0%
Water Heating	12.46	10.64	1.82	14.6%
PV Credit	----	0.00	0.00	----
North Facing Compliance Total	**72.39**	**67.05**	**5.34**	**7.4%**
Space Heating	17.55	18.12	-0.57	-3.2%
Space Cooling	40.77	37.50	3.27	8.0%
IAQ Ventilation	1.61	1.61	0.00	0.0%
Water Heating	12.46	10.64	1.82	14.6%
PV Credit	----	0.00	0.00	----
East Facing Compliance Total	**72.39**	**67.87**	**4.52**	**6.2%**
Space Heating	17.55	20.63	-3.08	-17.5%
Space Cooling	40.77	36.92	3.85	9.4%
IAQ Ventilation	1.61	1.61	0.00	0.0%
Water Heating	12.46	10.64	1.82	14.6%
PV Credit	----	0.00	0.00	----
South Facing Compliance Total	**72.39**	**69.80**	**2.59**	**3.6%**
Space Heating	17.55	18.68	-1.13	-6.4%
Space Cooling	40.77	35.48	5.29	13.0%
IAQ Ventilation	1.61	1.61	0.00	0.0%
Water Heating	12.46	10.64	1.82	14.6%
PV Credit	----	0.00	0.00	----
West Facing Compliance Total	**72.39**	**66.41**	**5.98**	**8.3%**

ENERGY DESIGN RATING

Energy Design Rating (EDR) is an alternate way to express the energy performance of a building using a scoring system where 100 represents the energy performance of the Residential Energy Services (RESNET) reference home characterization of the 2006 International Energy Conservation Code (IECC) with California modeling assumptions. A score of zero represents the energy performance of a building that combines high levels of energy efficiency with renewable generation to"zero out" its TDV energy. Because EDR includes consideration of renewable energy, EDR is not used to show compliance with Part 6 (Energy efficiency and consumer electronics), it is not used to show compliance with Part 6 but may instead be used by local jurisdictions pursuing local ordinances under Title 24, Part 11 (CALGreen).
As a Standard Design building under the 2016 Building Energy Efficiency Standards is significantly more efficient than the baseline EDR building, the EDR of the Standard Design building is provided for information. Similarly, the EDR score of the Proposed Design is provided separately from the EDR value of installed PV so that the effects of efficiency and renewable energy can both be seen.

	EDR of Standard Efficiency	EDR of Proposed Efficiency	EDR Value of Proposed PV + Battery	Final Proposed EDR
North	**55.5**	**53.3**	**0.0**	**53.3**
East	**55.5**	**53.7**	**0.0**	**53.7**
South	**55.5**	**54.5**	**0.0**	**54.5**
West	**55.5**	**53.1**	**0.0**	**53.1**

☐	**Design meets Tier 1 requirement of 15% or greater code compliance margin. [CALGreen A4.203.1.2.1] and QII verification prerequisite.**
☐	**Design meets Tier 2 requirement of 30% or greater code compliance margin. [CALGreen A4.203.1.2.2] and QII verification prerequisite.**
☐	**Design meets Zero Net Energy (ZNE) Design Designation requirement for Single Family in climate zone CZ14 (Palmdale) [CALGreen A4.203.1.2.3) including on-site photovoltaic (PV) renewable energy generation sufficient to achieve a Final Energy Design Rating (EDR) of zero or less. The PV System must be verified.**

Notes:
- **Excess PV Generation EDR Credit: Bypassing PV size limit may violate Net Energy Metering (NEM) rules**

REQUIRED SPECIAL FEATURES

The following are features that must be installed as condition for meeting the modeled energy performance for this computer analysis.

- **Cool roof**
- **Insulation below roof deck**

HERS FEATURE SUMMARY

The following is a summary of the features that must be field-verified by a certified HERS Rater as a condition for meeting the modeled energy performance for this computer analysis. Additional detail is provided in the building components tables below.

Building-level Verifications:
- **High quality insulation installation (QII)**
- **IAQ mechanical ventilation**

Cooling System Verifications:
- **Minimum Airflow**
- **Verified EER**
- **Verified SEER**
- **Verified Refrigerant Charge**
- **Fan Efficacy Watts/CFM**

HVAC Distribution System Verifications:
- **Duct Leakage**
- **Low-leakage Air Handling Unit**

Domestic Hot Water System Verifications:
- **-- None --**

BUILDING - FEATURES INFORMATION

01	02	03	04	05	06	07
Project Name	Conditioned Floor Area (ft^2)	Number of Dwelling Units	Number of Bedrooms	Number of Zones	Number of Ventilation Cooling Systems	Number of Water Heating Systems
The Colony 65 Plan 2	1498	1	4	1	0	1

ZONE INFORMATION

01	02	03	04	05	06	07
Zone Name	Zone Type	HVAC System Name	Zone Floor Area (ft^2)	Avg. Ceiling Height	Water Heating System 1	Water Heating System 2
Living Area	Conditioned	3 Ton1	1498	10	DHW Sys 1	n/a

OPAQUE SURFACES

01	02	03	04	05	06	07	08
Name	Zone	Construction	Azimuth	Orientation	Gross Area (ft^2)	Window & Door Area (ft^2)	Tilt (deg)
N Exterior Wall 2x4	Living Area	R-15 Wall	0	Front	147.5	40	90
E Exterior Wall 2x4	Living Area	R-15 Wall	90	Left	580	80	90
S Exterior Wall 2x4	Living Area	R-15 Wall	180	Back	354.2	144	90
W Exterior Wall 2x4	Living Area	R-15 Wall	270	Right	410	70	90
Interior Surface	Living Area>>__Garage__	R-11 Party Wall	n/a	n/a	383.4	0	n/a
Roof	Living Area	R-38 Roof Attic	n/a	n/a	1498	n/a	n/a
N Exterior Wall	__Garage__	R-0 Wall	0	Front	208.7	0	90
E Exterior Wall	__Garage__	R-0 Wall	90	Left	35	0	90
W Exterior Wall	__Garage__	R-0 Wall	270	Right	208.3	0	90
Roof 2	__Garage__	R-0 Roof Attic	n/a	n/a	417	n/a	n/a

ATTIC

01	02	03	04	05	06	07	08
Name	Construction	Type	Roof Rise	Roof Reflectance	Roof Emittance	Radiant Barrier	Cool Roof
Attic Living Area	Attic RoofLiving Area	Ventilated	5	0.3	0.75	No	Yes
Attic __Garage__	Attic Garage Roof Cons	Ventilated	5	0.1	0.85	No	No

FENESTRATION / GLAZING

01	02	03	04	05	06	07	08	09	10
Name	Type	Surface (Orientation-Azimuth)	Width (ft)	Height (ft)	Multiplier	Area (ft^2)	U-factor	SHGC	Exterior Shading
3080 FR DR	Window	N Exterior Wall 2x4 (Front-0)	----	----	1	24.0	0.30	0.20	Insect Screen (default)
4040 SL	Window	N Exterior Wall 2x4 (Front-0)	----	----	1	16.0	0.30	0.20	Insect Screen (default)
5050 SL	Window	E Exterior Wall 2x4 (Left-90)	----	----	1	25.0	0.30	0.20	Insect Screen (default)
(2) 4050 SL	Window	E Exterior Wall 2x4 (Left-90)	----	----	1	40.0	0.30	0.20	Insect Screen (default)
3050 SH	Window	E Exterior Wall 2x4 (Left-90)	----	----	1	15.0	0.30	0.20	Insect Screen (default)
8080 SLD	Window	S Exterior Wall 2x4 (Back-180)	----	----	1	64.0	0.31	0.20	Insect Screen (default)
4020 SL	Window	S Exterior Wall 2x4 (Back-180)	----	----	1	8.0	0.30	0.20	Insect Screen (default)
6080 SLD	Window	S Exterior Wall 2x4 (Back-180)	----	----	1	48.0	0.31	0.20	Insect Screen (default)
(2) 2050 SH	Window	W Exterior Wall 2x4 (Right-270)	----	----	1	20.0	0.30	0.20	Insect Screen (default)
(2) 5050 SL	Window	W Exterior Wall 2x4 (Right-270)	----	----	1	50.0	0.30	0.20	Insect Screen (default)

OPAQUE DOORS

01	02	03	04
Name	Side of Building	Area (ft^2)	U-factor
3080 SC DR	S Exterior Wall 2x4	24.0	0.50

OPAQUE SURFACE CONSTRUCTIONS

01	02	03	04	05	06	07
Construction Name	Surface Type	Construction Type	Framing	Total Cavity R-value	Winter Design U-factor	Assembly Layers
R-0 Wall	Exterior Walls	Wood Framed Wall	2x4 @ 16 in. O.C.	none	0.361	• *Inside Finish: Gypsum Board* • *Cavity / Frame: no insul. / 2x4* • *Exterior Finish: 3 Coat Stucco*
R-0 Roof Attic	Ceilings (below attic)	Wood Framed Ceiling	2x4 @ 16 in. O.C.	none	0.472	• *Inside Finish: Gypsum Board* • *Cavity / Frame: no insul. / 2x4*
Attic Garage Roof Cons	Attic Roofs	Wood Framed Ceiling	2x4 Top Chord of Roof Truss @ 24 in. O.C.	none	0.644	• *Cavity / Frame: no insul. / 2x4 Top Chrd* • *Roof Deck: Wood Sidling/sheathing/decking* • *Roofing: Light Roof (Asphalt Shingle)*
Attic RoofLiving Area	Attic Roofs	Wood Framed Ceiling	2x4 Top Chord of Roof Truss @ 24 in. O.C.	R 13	0.072	• *Around Roof Joists: R-0.0 insul.* • *Cavity / Frame: R-13.0 / 2x4 Top Chrd* • *Roof Deck: Wood Sidling/sheathing/decking* • *Tile Gap: present* • *Roofing: 10 PSF (RoofTile)*
R-15 Wall	Exterior Walls	Wood Framed Wall	2x4 @ 16 in. O.C.	R 15	0.095	• *Inside Finish: Gypsum Board* • *Cavity / Frame: R-15 / 2x4* • *Exterior Finish: 3 Coat Stucco*
R-38 Roof Attic	Ceilings (below attic)	Wood Framed Ceiling	2x4 @ 16 in. O.C.	R 38	0.025	• *Inside Finish: Gypsum Board* • *Cavity / Frame: R-9.7 / 2x4* • *Over Ceiling Joists: R-28.9 insul.*
R-11 Party Wall	Interior Walls	Wood Framed Wall	2x4 @ 16 in. O.C.	R 11	0.099	• *Inside Finish: Gypsum Board* • *Cavity / Frame: R-11 / 2x4* • *Other Side Finish: Gypsum Board*

SLAB FLOORS

01	02	03	04	05	06	07
Name	Zone	Area (ft^2)	Perimeter (ft)	Edge Insul. R-value & Depth	Carpeted Fraction	Heated
Slab-on-Grade	Living Area	1498	0.1	None	0.8	No
Slab-on-Grade 2	__Garage__	417	0.1	None	0	No

BUILDING ENVELOPE - HERS VERIFICATION

01	02	03	04
Quality Insulation Installation (QII)	Quality Installation of Spray Foam Insulation	Building Envelope Air Leakage	CFM50
Required	Not Required	Not Required	n/a

WATER HEATING SYSTEMS

01	02	03	04	05	06
Name	System Type	Distribution Type	Water Heater	Number of Heaters	Solar Fraction (%)
DHW Sys 1	DHW	Standard	DHW Heater 1 (1)	1	.0%

WATER HEATERS

01	02	03	04	05	06	07	08	09	10	11	12
Name	Heater Element Type	Tank Type	Number of Units	Tank Volume (gal)	Uniform Energy Factor / Energy Factor / Efficiency	Input Rating / Pilot / Thermal Efficiency	Tank Insulation R-value (hr/ft-sf)	Standby Loss / Recovery Eff	First Hour Rating / Flow Rate	NEEA Heat Pump Brand / Model / Other	Tank Location or Ambient Condition
DHW Heater 1	Gas	Small Instantaneous	1	0	0.96 EF	199,000 Btu/hr	R-0/R-0	n/a	n/a	n/a	n/a

SPACE CONDITIONING SYSTEMS

01	02	03	04	05	06
SC Sys Name	System Type	Heating Unit Name	Cooling Unit Name	Fan Name	Distribution Name
3 Ton1	Other Heating and Cooling System	Heating Component 1	Cooling Component 1	HVAC Fan 1	Air Distribution System 1

HVAC - HEATING UNIT TYPES

01	02	03	04
Name	System Type	Number of Units	Efficiency
Heating Component 1	Coil/Furnace	1	96.5 AFUE

HVAC - COOLING UNIT TYPES

01	02	03	04	05	06	07	08
			Efficiency				
Name	System Type	Number of Units	EER	SEER	Zonally Controlled	Compressor Type	HERS Verification
Cooling Component 1	Split/Air Cond	1	13	15.5	Not Zonal	Single Speed	Cooling Component 1-hers-cool

HVAC COOLING - HERS VERIFICATION

01	02	03	04	05	06
Name	Verified Airflow	Airflow Target	Verified EER	Verified SEER	Verified Refrigerant Charge
Cooling Component 1-hers-cool	Required	350	Required	Required	Required

HVAC - DISTRIBUTION SYSTEMS

01	02	03	04	05	06	07
Name	Type	Duct Leakage	Insulation R-value	Duct Location	Bypass Duct	HERS Verification
Air Distribution System 1	Ducts/Attic	Specified Lower Leakage Target	6	Attic	None	Air Distribution System 1-hers-dist

HVAC DISTRIBUTION - HERS VERIFICATION

01	02	03	04	05	06	07	08
Name	Duct Leakage Verification	Duct Leakage Target (%)	Verified Duct Location	Verified Duct Design	Buried Ducts	Deeply Buried Ducts	Low-leakage Air Handler
Air Distribution System 1-hers-dist	Required	5.0	Not Required	Not Required	Not Required	Not Required	Required

HVAC - FAN SYSTEMS

01	02	03	04
Name	Type	Fan Power (Watts/CFM)	HERS Verification
HVAC Fan 1	Single Speed PSC Furnace Fan	0.58	HVAC Fan 1-hers-fan

HVAC FAN SYSTEMS - HERS VERIFICATION

01	02	03
Name	Verified Fan Watt Draw	Required Fan Efficiency (Watts/CFM)
HVAC Fan 1-hers-fan	Required	0.58

IAQ (Indoor Air Quality) FANS

01	02	03	04	05	06
Dwelling Unit	IAQ CFM	IAQ Watts/CFM	IAQ Fan Type	IAQ Recovery Effectiveness(%)	HERS Verification
SFam IAQ/VentRpt	52	0.25	Default	0	Required

DOCUMENTATION AUTHOR'S DECLARATION STATEMENT

I. I certify that this Certificate of Compliance documentation is accurate and complete.

Documentation Author Name:	Documentation Author Signature:
Company: Gouvis Engineering Consulting Group, Inc.	Signature Date: 4/20/2018
Address:	CEA/HERS Certification Identification (if applicable):
City/State/Zip:	Phone:

RESPONSIBLE PERSON'S DECLARATION STATEMENT

I certify the following under penalty of perjury, under the laws of the State of California:
1. I am eligible under Division 3 of the Business and Professions Code to accept responsibility for the building design identified on this Certificate of Compliance.
2. I certify that the energy features and performance specifications identified on this Certificate of Compliance conform to the requirements of Title 24, Part 1 and Part 6 of the California Code of Regulations.
3. The building design features or system design features identified on this Certificate of Compliance are consistent with the information provided on other applicable compliance documents, worksheets, calculations, plans and specifications submitted to the enforcement agency for approval with this building permit application.

Responsible Designer Name:	Responsible Designer Signature:
Company:	Date Signed:
Address:	License:
City/State/Zip:	Phone:

This Certificate of Compliance is not registered

GOUVIS engineering consulting group, inc.
15 Studebaker
Irvine
CA 92618

Irvine
tel 949.752.1612
fax 949.752.5321

Palm Springs
tel 760.323.5090

RESTRICTIVE NOTICE

THESE DESIGNS, DRAWINGS, AND SPECIFICATIONS ARE THE EXCLUSIVE PROPERTY OF GOUVIS ENGINEERING CONSULTING GROUP, AND ALL INFORMATION SHOWN IS CONFIDENTIAL TO ALL RECIPIENTS AND NO PART OF THESE DRAWINGS CAN BE COPIED, TRANSFERRED, OR REPRODUCED, NOR CAN ANY STRUCTURES BE BUILT FROM THEM WITHOUT WRITTEN CONSENT OF GOUVIS ENGINEERING CONSULTING GROUP

COPYRIGHT GOUVIS ENGINEERING CONSULTING GROUP 2008 ALL RIGHTS RESERVED

PROJECT:
The Colony 65

DEVELOPER:
Imagine Development

ARCHITECT:
KPI

LOCATION:
Lancaster
CA

REVISIONS

NO.	DATE	DESCRIPTION

SHEET NAME:
TITLE 24 ENERGY COMPLIANCE FORMS PLAN 2

PROJECT NUMBER:
64797

ENGINEER:

DRAFTER:

ISSUED DATE: 03/19/2018
PLOT DATE: 04/23/2018

SHEET NUMBER:
T24-2

GENERAL INFORMATION

01	Project Name	The Colony 65 Plan 3	
02	Calculation Description	Title 24 Analysis	
03	Project Location	__	
04	City	Lancaster	05 Standards Version Compliance 2017
06	Zip Code	__	07 Compliance Manager Version BEMCmpMgr 2016.3.0 (1016 SP2)
08	Climate Zone	CZ14	09 Software Version EnergyPro 7.2
10	Building Type	Single Family	11 Front Orientation (deg/Cardinal) Cardinal
12	Project Scope	Newly Constructed	13 Number of Dwelling Units 1
14	Total Cond. Floor Area (ft^2)	2122	15 Number of Zones 2
16	Slab Area (ft^2)	948	17 Number of Stories 2
18	Addition Cond. Floor Area(ft^2)	n/a	19 Natural Gas Available Yes
20	Addition Slab Area (ft^2)	n/a	21 Glazing Percentage (%) 20.4%

COMPLIANCE RESULTS

01	Building Complies with Computer Performance
02	This building incorporates features that require field testing and/or verification by a certified HERS rater under the supervision of a CEC-approved HERS provider.
03	This building incorporates one or more Special Features shown below

ENERGY USE SUMMARY

Energy Use ($kTDV/ft^2$-yr)	Standard Design	Proposed Design	Compliance Margin	Percent Improvement
Space Heating	15.09	16.64	-1.55	-10.3%
Space Cooling	40.83	38.87	1.96	4.8%
IAQ Ventilation	1.43	1.43	0.00	0.0%
Water Heating	10.45	8.93	1.52	14.5%
PV Credit	----	0.00	0.00	----
North Facing Compliance Total	**67.80**	**65.87**	**1.93**	**2.8%**
Space Heating	15.09	16.11	-1.02	-6.8%
Space Cooling	40.83	32.44	8.39	20.5%
IAQ Ventilation	1.43	1.43	0.00	0.0%
Water Heating	10.45	8.93	1.52	14.5%
PV Credit	----	0.00	0.00	----
East Facing Compliance Total	**67.80**	**58.91**	**8.89**	**13.1%**
Space Heating	15.09	18.03	-2.94	-19.5%
Space Cooling	40.83	39.37	1.46	3.6%
IAQ Ventilation	1.43	1.43	0.00	0.0%
Water Heating	10.45	8.93	1.52	14.5%
PV Credit	----	0.00	0.00	----
South Facing Compliance Total	**67.80**	**67.76**	**0.04**	**0.1%**
Space Heating	15.09	17.52	-2.43	-16.1%
Space Cooling	40.83	31.72	9.11	22.3%
IAQ Ventilation	1.43	1.43	0.00	0.0%
Water Heating	10.45	8.93	1.52	14.5%
PV Credit	----	0.00	0.00	----
West Facing Compliance Total	**67.80**	**59.60**	**8.20**	**12.1%**

ENERGY DESIGN RATING

Energy Design Rating (EDR) is an alternate way to express the energy performance of a building using a scoring system where 100 represents the energy performance of the Residential Energy Services (RESNET) reference home characterization of the 2006 International Energy Conservation Code (IECC) with California modeling assumptions. A score of zero represents the energy performance of a building that combines high levels of energy efficiency with renewable generation to"zero out" its TDV energy. Because EDR includes consideration of building energy use beyond Title 24 (e.g. plug loads and consumer electronics), it is not used to show compliance with Part 6 but may instead be used by local jurisdictions pursuing local ordinances under Title 24, Part 11 (CALGreen).
As a Standard Design building under the 2016 Building Energy Efficiency Standards is significantly more efficient than the baseline EDR building, the EDR of the Standard Design building is provided for information. Similarly, the EDR score of the Proposed Design is provided separately from the EDR value of installed PV so that the effects of efficiency and renewable energy can both be seen

	EDR of Standard Efficiency	EDR of Proposed Efficiency	EDR Value of Proposed PV + Battery	Final Proposed EDR
North	**53.5**	**52.7**	**0.0**	**52.7**
East	**53.5**	**49.5**	**0.0**	**49.5**
South	**53.5**	**53.6**	**0.0**	**53.6**
West	**53.5**	**49.8**	**0.0**	**49.8**

☐	Design meets Tier 1 requirement of 15% or greater code compliance margin [CALGreen A4.203.1.2.1] and QII verification prerequisite.
☐	Design meets Tier 2 requirement of 30% or greater code compliance margin [CALGreen A4.203.1.2.2] and QII verification prerequisite.
☐	Design meets Zero Net Energy (ZNE) Design Designation requirement for Single Family in climate zone CZ14 (Palmdale) [CALGreen A4.203.1.2.3] including on-site photovoltaic (PV) renewable energy generation sufficient to achieve a Final Energy Design Rating (EDR) of zero or less. The PV System must be verified.

Notes:
- **Excess PV Generation EDR Credit: Bypassing PV size limit may violate Net Energy Metering (NEM) rules**

REQUIRED SPECIAL FEATURES

The following are features that must be installed as condition for meeting the modeled energy performance for this computer analysis.

- *Cool roof*
- **Insulation below roof deck**

HERS FEATURE SUMMARY

The following is a summary of the features that must be field-verified by a certified HERS Rater as a condition for meeting the modeled energy performance for this computer analysis. Additional detail is provided in the building components tables below.

Building-level Verifications:
- **High quality insulation installation (QII)**
- **IAQ mechanical ventilation**

Cooling System Verifications:
- **Minimum Airflow**
- **Verified EER**
- **Verified SEER**
- **Verified Refrigerant Charge**
- **Fan Efficacy Watts/CFM**

HVAC Distribution System Verifications:
- **-- None --**
- **Low-leakage Air Handling Unit**

Domestic Hot Water System Verifications:
- **-- None --**

BUILDING - FEATURES INFORMATION

01	02	03	04	05	06	07
Project Name	Conditioned Floor Area (ft^2)	Number of Dwelling Units	Number of Bedrooms	Number of Zones	Number of Ventilation Cooling Systems	Number of Water Heating Systems
The Colony 65 Plan 3	2122	1	5	2	0	1

ZONE INFORMATION

01	02	03	04	05	06	07
Zone Name	Zone Type	HVAC System Name	Zone Floor Area (ft^2)	Avg. Ceiling Height	Water Heating System 1	Water Heating System 2
Second Floor	Conditioned	2.5 Ton1	1174	9	DHW Sys 1	n/a
First Floor	Conditioned	2 Ton2	948	9	DHW Sys 1	n/a

OPAQUE SURFACES

01	02	03	04	05	06	07	08
Name	Zone	Construction	Azimuth	Orientation	Gross Area (ft^2)	Window & Door Area (ft^2)	Tilt (deg)
N Exterior Wall 2x4	Second Floor	R-15 Wall	0	Front	280.5	45	90
E Exterior Wall 2x4	Second Floor	R-15 Wall	90	Left	450.8	110	90
S Exterior Wall 2x4	Second Floor	R-15 Wall	180	Back	280.5	28	90
W Exterior Wall 2x4	Second Floor	R-15 Wall	270	Right	450.8	63	90
Roof	Second Floor	R-38 Roof Attic	n/a	n/a	1174	n/a	n/a
Interior Floor	Second Floor>>First Floor	R-0 Floor No Crawlspace	n/a	n/a	948	n/a	n/a
Interior Floor 2	Second Floor>>__Garage__	R-19 Floor No Crawlspace	n/a	n/a	130	n/a	n/a
N Exterior Wall 2x4 2	First Floor	R-15 Wall	0	Front	57.8	0	90
E Exterior Wall 2x4 2	First Floor	R-15 Wall	90	Left	345.8	91.5	90
S Exterior Wall 2x4 2	First Floor	R-15 Wall	180	Back	263.3	45	90
W Exterior Wall 2x4 2	First Floor	R-15 Wall	270	Right	261.7	74	90
Interior Surface	First Floor>>__Garage__	R-15 Party Wall	n/a	n/a	288.8	0	n/a
N Exterior Wall	__Garage__	R-0 Wall	0	Front	222.8	0	90
E Exterior Wall	__Garage__	R-0 Wall	90	Left	105	0	90
S Exterior Wall	__Garage__	R-0 Wall	180	Back	17.2	0	90
W Exterior Wall	__Garage__	R-0 Wall	270	Right	189	0	90
Roof 2	__Garage__	R-0 Roof Attic	n/a	n/a	353	n/a	n/a

ATTIC

01	02	03	04	05	06	07	08
Name	Construction	Type	Roof Rise	Roof Reflectance	Roof Emittance	Radiant Barrier	Cool Roof
Attic Second Floor	Attic RoofSecond Floor	Ventilated	5	0.3	0.75	No	Yes
Attic __Garage__	Attic Garage Roof Cons	Ventilated	5	0.1	0.85	No	No

FENESTRATION / GLAZING

01	02	03	04	05	06	07	08	09	10
Name	Type	Surface (Orientation-Azimuth)	Width (ft)	Height (ft)	Multiplier	Area (ft^2)	U-factor	SHGC	Exterior Shading
4650 SL	Window	N Exterior Wall 2x4 (Front-0)	----	----	1	22.5	0.30	0.20	Insect Screen (default)
4650 SL 2	Window	N Exterior Wall 2x4 (Front-0)	----	----	1	22.5	0.30	0.20	Insect Screen (default)
(2) 3050 SH	Window	E Exterior Wall 2x4 (Left-90)	----	----	1	30.0	0.30	0.20	Insect Screen (default)
(2) 3050 SH 2	Window	E Exterior Wall 2x4 (Left-90)	----	----	1	30.0	0.30	0.20	Insect Screen (default)
(2) 3050 SH 3	Window	E Exterior Wall 2x4 (Left-90)	----	----	1	30.0	0.30	0.20	Insect Screen (default)
(2) 2050 SH	Window	E Exterior Wall 2x4 (Left-90)	----	----	1	20.0	0.30	0.20	Insect Screen (default)
(2) 2050 SH 2	Window	S Exterior Wall 2x4 (Back-180)	----	----	1	20.0	0.30	0.20	Insect Screen (default)
2040 SH	Window	S Exterior Wall 2x4 (Back-180)	----	----	1	8.0	0.30	0.20	Insect Screen (default)
4050 SL	Window	W Exterior Wall 2x4 (Right-270)	----	----	1	20.0	0.30	0.20	Insect Screen (default)
(2) 2650 FK	Window	W Exterior Wall 2x4 (Right-270)	----	----	1	25.0	0.30	0.20	Insect Screen (default)
4020 SL	Window	W Exterior Wall 2x4 (Right-270)	----	----	1	8.0	0.30	0.20	Insect Screen (default)
2640 SH	Window	W Exterior Wall 2x4 (Right-270)	----	----	1	10.0	0.30	0.20	Insect Screen (default)
(2) 3050 SH 4	Window	E Exterior Wall 2x4 (Left-90)	----	----	1	30.0	0.30	0.20	Insect Screen (default)
(2) 3050 SH 5	Window	E Exterior Wall 2x4 (Left-90)	----	----	1	30.0	0.30	0.20	Insect Screen (default)
1650 SH	Window	E Exterior Wall 2x4 (Left-90)	----	----	1	7.5	0.30	0.20	Insect Screen (default)
(2) 2650 SH	Window	S Exterior Wall 2x4 (Back-180)	----	----	1	25.0	0.30	0.20	Insect Screen (default)
(2) 2050 SH 3	Window	S Exterior Wall 2x4 (Back-180)	----	----	1	20.0	0.30	0.20	Insect Screen (default)
6080 SLD	Window	W Exterior Wall 2x4 (Right-270)	----	----	1	48.0	0.30	0.20	Insect Screen (default)
4040 SL	Window	W Exterior Wall 2x4 (Right-270)	----	----	1	16.0	0.30	0.20	Insect Screen (default)
2640 SH 2	Window	W Exterior Wall 2x4 (Right-270)	----	----	1	10.0	0.30	0.20	Insect Screen (default)

OPAQUE DOORS

01	02	03	04
Name	Side of Building	Area (ft^2)	U-factor
3080 SC DR	E Exterior Wall 2x4 2	24.0	0.50

OPAQUE SURFACE CONSTRUCTIONS

01	02	03	04	05	06	07
Construction Name	Surface Type	Construction Type	Framing	Total Cavity R-value	Winter Design U-factor	Assembly Layers
R-0 Wall	Exterior Walls	Wood Framed Wall	2x4 @ 16 in. O.C.	none	0.361	• *Inside Finish: Gypsum Board* • *Cavity / Frame: no insul. / 2x4* • *Exterior Finish: 3 Coat Stucco*
R-0 Roof Attic	Ceilings (below attic)	Wood Framed Ceiling	2x4 @ 16 in. O.C.	none	0.472	• *Inside Finish: Gypsum Board* • *Cavity / Frame: no insul. / 2x4*
Attic Garage Roof Cons	Attic Roofs	Wood Framed Ceiling	2x4 Top Chord of Roof Truss @ 24 in. O.C.	none	0.644	• *Cavity / Frame: no insul. / 2x4 Top Chrd* • *Roof Deck: Wood Sidling/sheathing/decking* • *Roofing: Light Roof (Asphalt Shingle)*
Attic RoofSecond Floor	Attic Roofs	Wood Framed Ceiling	2x4 Top Chord of Roof Truss @ 24 in. O.C.	R 13	0.072	• *Around Roof Joists: R-0.0 insul.* • *Cavity / Frame: R-13.0 / 2x4 Top Chrd* • *Roof Deck: Wood Sidling/sheathing/decking* • *Tile Gap: present* • *Roofing: 10 PSF (RoofTile)*
R-15 Wall	Exterior Walls	Wood Framed Wall	2x4 @ 16 in. O.C.	R 15	0.095	• *Inside Finish: Gypsum Board* • *Cavity / Frame: R-15 / 2x4* • *Exterior Finish: 3 Coat Stucco*
R-0 Floor No Crawlspace	Interior Floors	Wood Framed Floor	2x12 @ 16 in. O.C.	none	0.196	• *Floor Surface: Carpeted* • *Floor Deck: Wood Sidling/sheathing/decking* • *Cavity / Frame: no insul. / 2x12* • *Ceiling Below Finish: Gypsum Board*
R-19 Floor No Crawlspace	Interior Floors	Wood Framed Floor	2x8 @ 16 in. O.C.	R 19 in 5-1/2 in. cavity (R-19)	0.049	• *Floor Surface: Carpeted* • *Floor Deck: Wood Sidling/sheathing/decking* • *Cavity / Frame: R-19 in 5-1/2 in. (R-18) / 2x8* • *Ceiling Below Finish: Gypsum Board*
R-38 Roof Attic	Ceilings (below attic)	Wood Framed Ceiling	2x4 @ 16 in. O.C.	R 38	0.025	• *Inside Finish: Gypsum Board* • *Cavity / Frame: R-9.1 / 2x4* • *Over Ceiling Joists: R-28.9 insul.*
R-11 Party Wall	Interior Walls	Wood Framed Wall	2x4 @ 16 in. O.C.	R 11	0.099	• *Inside Finish: Gypsum Board* • *Cavity / Frame: R-11 / 2x4* • *Other Side Finish: Gypsum Board*

SLAB FLOORS

01	02	03	04	05	06	07
Name	Zone	Area (ft^2)	Perimeter (ft)	Edge Insul. R-value & Depth	Carpeted Fraction	Heated
Slab-on-Grade	First Floor	948	0.1	None	0.8	No
Slab-on-Grade 2	__Garage__	483	0.1	None	0	No

BUILDING ENVELOPE - HERS VERIFICATION

01	02	03	04
Quality Insulation Installation (QII)	Quality Installation of Spray Foam Insulation	Building Envelope Air Leakage	CFM50
Required	Not Required	Not Required	n/a

WATER HEATING SYSTEMS

01	02	03	04	05	06
Name	System Type	Distribution Type	Water Heater	Number of Heaters	Solar Fraction (%)
DHW Sys 1	DHW	Standard	DHW Heater 1 (1)	1	0%

WATER HEATERS

01	02	03	04	05	06	07	08	09	10	11	12
Name	Heater Element Type	Tank Type	Number of Units	Tank Volume (gal)	Uniform Energy Factor / Energy Factor / Efficiency	Input Rating / Pilot / Thermal Efficiency	Tank Insulation R-value (hr\ft\f)	Standby Loss / Recovery Eff	First Hour Rating / Flow Rate	NEEA Heat Pump Brand / Model / Other	Tank Location or Ambient Condition
DHW Heater 1	Gas	Small Instantaneous	1	0	0.99 UEF	199,000 Btu/hr	R-0R-0	n/a	n/a	n/a	n/a

SPACE CONDITIONING SYSTEMS

01	02	03	04	05	06
SC Sys Name	System Type	Heating Unit Name	Cooling Unit Name	Fan Name	Distribution Name
2.5 Ton1	Other Heating and Cooling System	Heating Component 1	Cooling Component 1	HVAC Fan 1	Air Distribution System 1
2 Ton2	Other Heating and Cooling System	Heating Component 2	Cooling Component 2	HVAC Fan 2	Air Distribution System 2

HVAC - HEATING UNIT TYPES

01	02	03	04
Name	System Type	Number of Units	Efficiency
Heating Component 1	Crit/Furnace	1	96.5 AFUE
Heating Component 2	Crit/Furnace	1	96.5 AFUE

HVAC - COOLING UNIT TYPES

01	02	03	04	05	06	07	08
			Efficiency				
Name	System Type	Number of Units	EER	SEER	Zonally Controlled	Compressor Type	HERS Verification
Cooling Component 1	SplitAirCond	1	13	15.5	Not Zonal	Single Speed	Cooling Component 1-hers-cool
Cooling Component 2	SplitAirCond	1	13	15.5	Not Zonal	Single Speed	Cooling Component 2-hers-cool

HVAC COOLING - HERS VERIFICATION

01	02	03	04	05	06
Name	Verified Airflow	Airflow Target	Verified EER	Verified SEER	Verified Refrigerant Charge
Cooling Component 1-hers-cool	Required	350	Required	Required	Required
Cooling Component 2-hers-cool	Required	350	Required	Required	Required

HVAC - DISTRIBUTION SYSTEMS

01	02	03	04	05	06	07
Name	Type	Duct Leakage	Insulation R-value	Duct Location	Bypass Duct	HERS Verification
Air Distribution System 1	Ducts/Attic	Specified Lower Leakage Target	6	Attic	None	Air Distribution System 1-hers-dist
Air Distribution System 2	Ducts/Attic	Specified Lower Leakage Target	6	Attic	None	Air Distribution System 2-hers-dist

HVAC DISTRIBUTION - HERS VERIFICATION

01	02	03	04	05	06	07	08
Name	Duct Leakage Verification	Duct Leakage Target (%)	Verified Duct Location	Verified Duct Design	Buried Ducts	Deeply Buried Ducts	Low-leakage Air Handler
Air Distribution System 1-hers-dist	Required	5.0	Not Required	Not Required	Not Required	Not Required	Required
Air Distribution System 2-hers-dist	Required	5.0	Not Required	Not Required	Not Required	Not Required	Required

HVAC - FAN SYSTEMS

01	02	03	04
Name	Type	Fan Power (Watts/CFM)	HERS Verification
HVAC Fan 1	Single Speed PSC Furnace Fan	0.5	HVAC Fan 1-hers-fan
HVAC Fan 2	Single Speed PSC Furnace Fan	0.5	HVAC Fan 2-hers-fan

HVAC FAN SYSTEMS - HERS VERIFICATION

01	02	03
Name	Verified Fan Watt Draw	Required Fan Efficiency (Watts/CFM)
HVAC Fan 1-hers-fan	Required	0.50
HVAC Fan 2-hers-fan	Required	0.50

IAQ (Indoor Air Quality) FANS

01	02	03	04	05	06
Dwelling Unit	IAQ CFM	IAQ Watts/CFM	IAQ Fan Type	IAQ Recovery Effectiveness(%)	HERS Verification
SFam IAQ/VentRpt	66	0.25	Default	0	Required

DOCUMENTATION AUTHOR'S DECLARATION STATEMENT

I, I certify that this Certificate of Compliance documentation is accurate and complete.

Documentation Author Name:	Documentation Author Signature:
Company: Gouvis Engineering Consulting Group, Inc.	Signature Date: 4/20/2018
Address:	CEA/HERS Certification Identification (if applicable):
City/State/Zip: ,	Phone:

RESPONSIBLE PERSON'S DECLARATION STATEMENT

I certify the following under penalty of perjury, under the laws of the State of California:
1. I am eligible under Division 3 of the Business and Professions Code to accept responsibility for the building design identified on this Certificate of Compliance.
2. I certify that the energy features and performance specifications identified on this Certificate of Compliance conform to the requirements of Title 24, Part 1 and Part 6 of the California Code of Regulations.
3. The building design features or system design features identified on this Certificate of Compliance are consistent with the information provided on other applicable compliance documents, worksheets, calculations, plans and specifications submitted to the enforcement agency for approval with this building permit application.

Responsible Designer Name:	Responsible Designer Signature:
Company:	Date Signed:
Address:	License:
City/State/Zip: ,	Phone:

This Certificate of Compliance is not registered

GOUVIS engineering consulting group, inc.
15 Studebaker
Irvine
CA 92618

Irvine
tel 949.752.1612
fax 949.752.5321

Palm Springs
tel 760.323.5090

RESTRICTIVE NOTICE

THESE DESIGNS, DRAWINGS, AND SPECIFICATIONS ARE THE EXCLUSIVE PROPERTY OF GOUVIS ENGINEERING CONSULTING GROUP, AND ALL INFORMATION SHOWN IS CONFIDENTIAL TO ALL RECIPIENTS AND NO PART OF THESE DRAWINGS CAN BE COPIED, TRANSFERRED, OR REPRODUCED, NOR CAN ANY STRUCTURES BE BUILT FROM THEM WITHOUT WRITTEN CONSENT OF GOUVIS ENGINEERING CONSULTING GROUP

COPYRIGHT GOUVIS ENGINEERING CONSULTING GROUP 2008 ALL RIGHTS RESERVED

PROJECT:
The Colony 65

DEVELOPER:
Imagine Development

ARCHITECT:
KPI

LOCATION:
Lancaster
CA

REVISIONS

NO.	DATE	DESCRIPTION

SHEET NAME:
TITLE 24 ENERGY COMPLIANCE FORMS PLAN 3

PROJECT NUMBER:
64797

ENGINEER:

DRAFTER:

ISSUED DATE: 03/19/2018
PLOT DATE: 04/23/2018

SHEET NUMBER:
T24-3