RESIDENCE INN MARRIOT

AXISGFA ARCHITECTS

LANCASTER, CA.

PLAN CHECK SUBMITTAL

DATE: 02.16.18

STRUCTURAL DRAWING LIST

SHEET NO	SHEET NAME
S0 SERIES:	GENERAL
S0.00	COVER
S0.01	SHEET PUBLICATION MATRIX
S0.02	LEGEND & ABBREVIATIONS
S0.10	GENERAL NOTES
S0.11	GENERAL NOTES
S0.20	SPECIAL INSPECTIONS AND STRUCTURAL TESTING
S0.21	STRUCTURAL OBSERVATION
S0.40	LOADING DIAGRAMS
S0.51	LAP SPLICE, DEVELOPMENT LENGTH AND STANDARD HOOKS SCHEDULES
S2 SERIES:	STRUCTURAL PLANS
S2.01A	FOUNDATION PLAN - A
S2.01B	FOUNDATION PLAN - B
S2.01RA	FOUNDATION REINFORCING - A
S2.01RB	FOUNDATION REINFORCING - B
S2.02A	SECOND FLOOR FRAMING - A
S2.02B	SECOND FLOOR FRAMING - B
S2.02RA	SECOND FLOOR REINFORCING - A
S2.02RB	SECOND FLOOR REINFORCING - B
S2.02SWA	SECOND FLOOR SHEAR WALL PLAN - A
S2.02SWB	SECOND FLOOR SHEAR WALL PLAN - B
S2.03A	THIRD FLOOR FRAMING PLAN - A
S2.03B	THIRD FLOOR FRAMING PLAN - B
S2.03R	POOL DECK REINFORCING PLAN
S2.03SWA	THIRD FLOOR SHEAR WALL PLAN - A
S2.03SWB	THIRD FLOOR SHEAR WALL PLAN - B
S2.04A	FOURTH FLOOR FRAMING PLAN - A
S2.04B	FOURTH FLOOR FRAMING PLAN - B
S2.04SWA	FOURTH FLOOR SHEAR WALL PLAN - A
S2.04SWB	FOURTH FLOOR SHEAR WALL PLAN - B
S2.05A	FIFTH FLOOR FRAMING PLAN - A
S2.05B	FIFTH FLOOR FRAMING PLAN - B
S2.05SWA	FIFTH FLOOR SHEAR WALL PLAN - A
S2.05SWB	FIFTH FLOOR SHEAR WALL PLAN - B
S2.06A	ROOF FRAMING PLAN - A
S2.06B	ROOF FRAMING PLAN - B
S4 SERIES:	FOUNDATION DETAILS
S4.00	TYPICAL FOUNDATION DETAILS
S4.01	TYPICAL FOUNDATION DETAILS
S4.10	TYPICAL SLAB-ON-GRADE DETAILS
S4.11	TYPICAL SLAB-ON-GRADE DETAILS
S4.12	TYPICAL SLAB-ON-GRADE DETAILS
S4.40	TYPICAL GRADE BEAM DETAILS
S4.50	FOUNDATION DETAILS
S4.51	FOUNDATION DETAILS
S5 SERIES:	CONCRETE SECTION AND DETAILS
S5.00	TYPICAL CONCRETE COLUMN DETAILS
S5.01	CONCRETE COLUMN DETAILS
S5.10	TYPICAL WALL DETAILS
S5.20	TYPICAL CONCRETE SLAB DETAILS
S5.21	TYPICAL CONCRETE SLAB DETAILS
S5.22	TYPICAL CONCRETE SLAB DETAILS
S5.23	TYPICAL CONCRETE SLAB DETAILS
S5.24	TYPICAL CONCRETE SLAB REINFORCEMENT DETAILS
S5.25	CONCRETE SLAB REINFORCEMENT DETAILS
S5.40	TYPICAL CONCRETE BEAM DETAILS
S5.41	TYPICAL CONCRETE BEAM DETAILS
S5.42	TYPICAL CONCRETE BEAM DETAILS
S5.60	CONCRETE DETAILS
S6 SERIES:	MASONRY SCHEDULES, SECTIONS AND DETAILS
S6.00	TYPICAL CMU DETAILS
S7 SERIES:	STEEL DETAILS
S7.01	TYPICAL STEEL DETAILS
S7.10	TYPICAL STEEL DETAILS
S7.11	TYPICAL STEEL DETAILS
S7.20	TYPICAL STEEL DECK DETAILS (BARE DECK)
S7.30	TYPICAL STAIR DETAILS
S7.31	TYPICAL STAIR DETAILS
S7.40	ELEVATOR DETAILS
S7.50	STEEL DETAILS
S8 SERIES:	WOOD DETAILS
S8.00	TYPICAL WOOD DETAILS AND SCHEDULES
S8.01	TYPICAL WOOD DETAILS
S8.02	TYPICAL WOOD DETAILS
S8.03	TYPICAL STAIR DETAILS
S8.10	TYPICAL WOOD CONNECTIONS
S8.11	TYPICAL WOOD CONNECTIONS
S8.20	TYPICAL JOIST DETAILS
S8.21	TYPICAL JOIST DETAILS
S8.30	TYPICAL WOOD WALL DETAILS
S8.31	TYPICAL WOOD WALL DETAILS
S8.40	TYPICAL WOOD SHEAR WALL DETAILS
S8.41	TYPICAL WOOD SHEAR WALL DETAILS
S8.42	TYPICAL WOOD SHEAR WALL DETAILS
S8.43	TYPICAL WOOD SHEAR WALL DETAILS
S8.44	WOOD SHEAR WALL SCHEDULE
S8.45	WOOD SHEAR WALL SCHEDULE
S8.50	TYPICAL WOOD DETAILS
S8.51	TYPICAL WOOD DETAILS
S8.60	WOOD DETAILS
S8.61	WOOD DETAILS
S9 SERIES:	METAL STUD SCHEDULES, SECTIONS AND DETAILS
S9.10	TYPICAL EXTERIOR METAL STUD DETAILS
S9.11	TYPICAL EXTERIOR METAL STUD DETAILS
S9.20	TYPICAL INTERIOR METAL STUD DETAILS
S9.21	TYPICAL INTERIOR METAL STUD DETAILS
S9.22	TYPICAL INTERIOR SOFFIT AND CEILING DETAILS
S9.30	TYPICAL METAL STUD DETAILS
S9.31	TYPICAL METAL STUD DETAILS

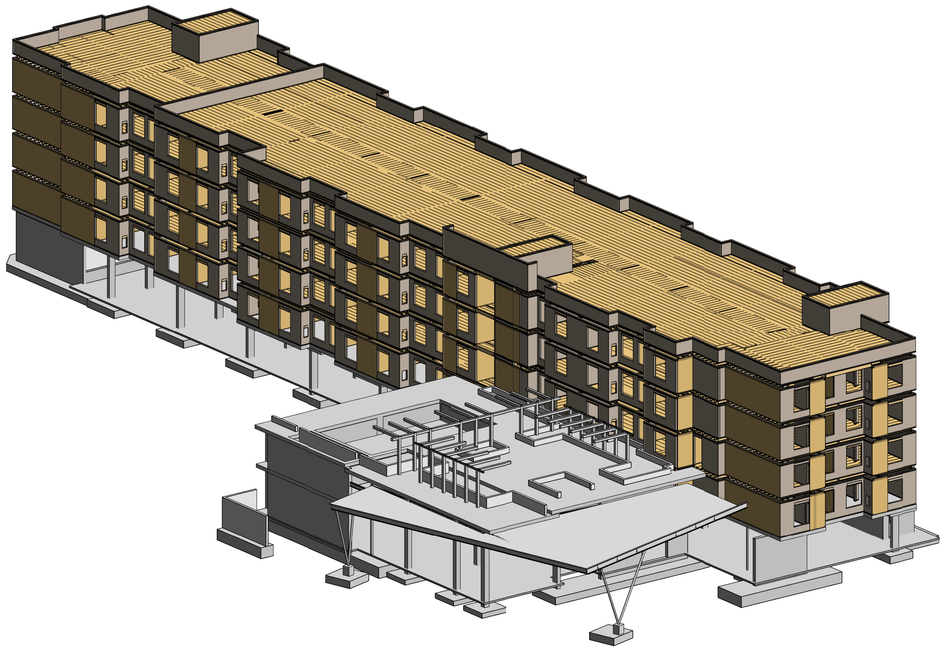

AXIS GFA

1130 WESTWOOD BLVD
LOS ANGELES, CA 90024
T 310.209.7520
F 310.209.7516
www.axisgfa.com

PROJECT NAME

Residence Inn® Marriott.

840 KILDARE STREET,
LANCASTER, CA

OWNER:

INSITE REAL STATE
DEVELOPMENT
6265 VARIEL AVENUE
WOODLAND HILLS, CA 91367

Thornton Tomasetti
Thornton Tomasetti, Inc.
707 Wilshire Blvd, Suite 4450
Los Angeles, CA 90017-3618
T 213.330.7000 F 213.330.7001

Project Status

REGISTERED PROFESSIONAL ENGINEER
CHARMAIN QUINTRIS
No. S4416
Exp. 6/30/18
STRUCTURAL
STATE OF CALIFORNIA

NO.	DATE	ISSUES AND REVISIONS	BY
	10.13.17	DESIGN DEVELOPMENT	
	11.20.17	CD PROGRESS SET	
	12.18.17	PLAN CHECK	
	02.16.18	PLAN CHECK	

DATE

SCALE AS NOTED

PROJECT NUMBER

COMPUTER FILE S17081

PROJECT NAME

DESCRIPTION
COVER

SHEET NUMBER
S0.00

ALL DRAWINGS AND WRITTEN MATERIAL APPEARING HEREIN CONSTITUTE ORIGINAL AND UNPUBLISHED WORK OF THE ARCHITECT AND MAY NOT BE DUPLICATED, USED OR DISCLOSED WITHOUT WRITTEN CONSENT OF THE ARCHITECT

	SHEET NAME	PLAN CHECK SUBMITTAL	CD PROGRESS SET	DESIGN DEVELOPMENT
S4.01	TYPICAL FOUNDATION DETAILS	●	●	
S4.10	TYPICAL SLAB-ON-GRADE DETAILS	●	●	●
S4.11	TYPICAL SLAB-ON-GRADE DETAILS	●	●	
S4.12	TYPICAL SLAB-ON-GRADE DETAILS	●	●	
S4.40	TYPICAL GRADE BEAM DETAILS			
S4.50	FOUNDATION DETAILS	●		●
S4.51	FOUNDATION DETAILS	●		
S5 SERIES: CONCRETE SECTION AND DETAILS				
S5.00	TYPICAL CONCRETE COLUMN DETAILS	●	●	●
S5.01	CONCRETE COLUMN DETAILS	●	●	●
S5.10	TYPICAL WALL DETAILS	●	●	●
S5.20	TYPICAL CONCRETE SLAB DETAILS	●	●	●
S5.21	TYPICAL CONCRETE SLAB DETAILS	●	●	●
S5.22	TYPICAL CONCRETE SLAB DETAILS	●	●	●
S5.23	TYPICAL CONCRETE SLAB DETAILS	●	●	●
S5.24	TYPICAL CONCRETE SLAB REINFORCEMENT DETAILS	●	●	●
S5.25	CONCRETE SLAB REINFORCEMENT DETAILS	●	●	●
S5.40	TYPICAL CONCRETE BEAM DETAILS	●	●	
S5.41	TYPICAL CONCRETE BEAM DETAILS	●	●	
S5.42	TYPICAL CONCRETE BEAM DETAILS	●	●	
S5.60	CONCRETE DETAILS	●		
S6 SERIES: MASONRY SCHEDULES, SECTIONS AND DETAILS				
S6.00	TYPICAL CMU DETAILS	●	●	●
S7 SERIES: STEEL DETAILS				
S7.01	TYPICAL STEEL DETAILS	●		●
S7.10	TYPICAL STEEL DETAILS	●		●
S7.11	TYPICAL STEEL DETAILS	●	●	●
S7.20	TYPICAL STEEL DECK DETAILS (BARE DECK)	●		●
S7.30	TYPICAL STAIR DETAILS	●	●	●
S7.31	TYPICAL STAIR DETAILS	●	●	●
S7.40	ELEVATOR DETAILS	●	●	●
S7.50	STEEL DETAILS	●		
S8 SERIES: WOOD DETAILS				
S8.00	TYPICAL WOOD DETAILS AND SCHEDULES	●	●	●
S8.01	TYPICAL WOOD DETAILS	●	●	
S8.02	TYPICAL WOOD DETAILS	●		●
S8.03	TYPICAL STAIR DETAILS	●	●	●
S8.10	TYPICAL WOOD CONNECTIONS	●	●	
S8.20	TYPICAL JOIST DETAILS	●	●	●
S8.21	TYPICAL JOIST DETAILS	●	●	●
S8.30	TYPICAL WOOD WALL DETAILS	●	●	●
S8.31	TYPICAL WOOD WALL DETAILS	●	●	●
S8.40	TYPICAL WOOD SHEAR WALL DETAILS	●	●	
S8.41	TYPICAL WOOD SHEAR WALL DETAILS	●	●	●
S8.42	TYPICAL WOOD SHEAR WALL DETAILS	●	●	
S8.43	TYPICAL WOOD SHEAR WALL DETAILS	●	●	
S8.44	WOOD SHEAR WALL SCHEDULE	●		
S8.45	WOOD SHEAR WALL SCHEDULE	●		
S8.50	TYPICAL WOOD DETAILS	●	●	●
S8.51	TYPICAL WOOD DETAILS	●	●	●
S8.60	WOOD DETAILS			
S8.61	WOOD DETAILS	●	●	
S8.11	TYPICAL WOOD CONNECTIONS	●		●
S9 SERIES: METAL STUD SCHEDULES, SECTIONS AND DETAILS				
S9.10	TYPICAL EXTERIOR METAL STUD DETAILS	●		●
S9.11	TYPICAL EXTERIOR METAL STUD DETAILS	●		
S9.20	TYPICAL INTERIOR METAL STUD DETAILS	●	●	●
S9.21	TYPICAL INTERIOR METAL STUD DETAILS	●	●	●
S9.22	TYPICAL INTERIOR SOFFIT AND CEILING DETAILS	●	●	●
S9.30	TYPICAL METAL STUD DETAILS	●	●	●
S9.31	TYPICAL METAL STUD DETAILS	●	●	●

	SHEET NAME	PLAN CHECK SUBMITTAL	CD PROGRESS SET	DESIGN DEVELOPMENT
S0 SERIES: GENERAL				
S0.00	COVER	●	●	
S0.01	SHEET PUBLICATION MATRIX	●	●	
S0.02	LEGEND & ABBREVIATIONS	●	●	●
S0.10	GENERAL NOTES	●	●	●
S0.11	GENERAL NOTES	●	●	●
S0.20	SPECIAL INSPECTIONS AND STRUCTURAL TESTING	●	●	●
S0.21	STRUCTURAL OBSERVATION	●	●	●
S0.40	LOADING DIAGRAMS	●		
S0.51	LAP SPLICE, DEVELOPMENT LENGTH AND STANDARD HOOKS SCHEDULES	●	●	●
S2 SERIES: STRUCTURAL PLANS				
S2.01A	FOUNDATION PLAN - A	●	●	
S2.01B	FOUNDATION PLAN - B	●	●	
S2.01RA	FOUNDATION REINFORCING - A	●		
S2.01RB	FOUNDATION REINFORCING - B	●		
S2.02A	SECOND FLOOR FRAMING - A	●	●	
S2.02B	SECOND FLOOR FRAMING - B	●	●	
S2.02RA	SECOND FLOOR REINFORCING - A	●	●	
S2.02RB	SECOND FLOOR REINFORCING - B	●	●	
S2.02SWA	SECOND FLOOR SHEAR WALL PLAN - A	●	●	
S2.02SWB	SECOND FLOOR SHEAR WALL PLAN - B	●	●	
S2.03A	THIRD FLOOR FRAMING PLAN - A	●	●	
S2.03B	THIRD FLOOR FRAMING PLAN - B	●	●	
S2.03R	POOL DECK REINFORCING PLAN	●	●	
S2.03SWA	THIRD FLOOR SHEAR WALL PLAN - A	●	●	
S2.03SWB	THIRD FLOOR SHEAR WALL PLAN - B	●	●	
S2.04A	FOURTH FLOOR FRAMING PLAN - A	●	●	
S2.04B	FOURTH FLOOR FRAMING PLAN - B	●	●	
S2.04SWA	FOURTH FLOOR SHEAR WALL PLAN - A	●	●	
S2.04SWB	FOURTH FLOOR SHEAR WALL PLAN - B	●	●	
S2.05A	FIFTH FLOOR FRAMING PLAN - A	●	●	
S2.05B	FIFTH FLOOR FRAMING PLAN - B	●	●	
S2.05SWA	FIFTH FLOOR SHEAR WALL PLAN - A	●	●	
S2.05SWB	FIFTH FLOOR SHEAR WALL PLAN - B	●	●	
S2.06A	ROOF FRAMING PLAN - A	●	●	
S2.06B	ROOF FRAMING PLAN - B	●	●	
S4 SERIES: FOUNDATION DETAILS				
S4.00	TYPICAL FOUNDATION DETAILS	●	●	

AXIS GFA

1130 WESTWOOD BLVD
LOS ANGELES, CA 90024
T 310.209.7520
F 310.209.7516
www.axisgfa.com

PROJECT NAME

Residence Inn® Marriott.

840 KILDARE STREET,
LANCASTER, CA

OWNER:

INSITE REAL STATE
DEVELOPMENT
6265 VARIEL AVENUE
WOODLAND HILLS, CA 91367

Thornton Tomasetti

Thornton Tomasetti, Inc.
707 Wilshire Blvd, Suite 4450
Los Angeles, CA 90017-3618
T 213.330.7000 F 213.330.7001

Project Status

REGISTERED PROFESSIONAL ENGINEER
STEPHANIE GRAUER
No. S4416
Exp. 6/30/18
STRUCTURAL
STATE OF CALIFORNIA

NO.	DATE	ISSUES AND REVISIONS	BY
	10.13.17	DESIGN DEVELOPMENT	
	11.20.17	CD PROGRESS SET	
	12.18.17	PLAN CHECK	
	02.16.18	PLAN CHECK	

DATE

SCALE AS NOTED

PROJECT NUMBER

COMPUTER FILE S17081

PROJECT NAME

DESCRIPTION
SHEET PUBLICATION MATRIX

SHEET NUMBER
S0.01

ALL DRAWINGS AND WRITTEN MATERIAL APPEARING HEREIN CONSTITUTE ORIGINAL AND UNPUBLISHED WORK OF THE ARCHITECT AND MAY NOT BE DUPLICATED, USED OR DISCLOSED WITHOUT WRITTEN CONSENT OF THE ARCHITECT

SYMBOLS	DESCRIPTION	REFERENCE
T/SLAB EL = 0' - 0"	ELEVATION	
AHU 1 1000 lbs	AIR HANDLING UNIT AND MAX OPERATING WEIGHT	
X"	X - INDICATES CHANGE IN T/STRUCTURAL SLAB ELEVATION	
UP DN	INDICATES SLOPE IN STRUCTURAL SLAB	
?	GRID NUMBER	
	WORK POINT	
OPEN	OPENING IN FLOOR OR ROOF	
	SLOPE	
	RIDGE AT SLOPED ROOF	
	VALLEY AT SLOPED ROOF	
SLRS	ALL COLUMNS, BEAMS, BRACES AND THEIR CONNECTIONS ON LINES DENOTED "SLRS" SHALL COMPLY WITH SPECIFICATION REQUIREMENTS FOR THE SEISMIC-LOAD-RESISTANCE SYSTEM	SEE SPECS
	SLOPED OR DEPRESSED SLAB	
PHD5A	HOLDOWN	
	CONCRETE CURB ON DECK OR SLAB	
F11 (-2'-6")	SPREAD FOOTING TYPE AND TOP OF FOOTING ELEVATION	
S S	STEP IN FOOTING	
GB-X	GRADE BEAM	
CF-X	CONTINUOUS FOOTING	
PX.XX	PILE AND CAP P2.80 — MINIMUM DESIGN PILE LENGTH; NUMBER OF PILES	
	PILE	
IP	INDICATOR PILE	
	PIER	
X-X	SLAB REINFORCING DIRECTION	
	CONCRETE WALL	
	CONCRETE MASONRY UNIT WALL	
	SHEAR OR BEARING WALL BELOW (AND NOT ABOVE)	
	SHEAR OR BEARING WALL (ABOVE AND BELOW)	
4	PLYWOOD SHEARWALL WITH INDICATED NAIL SPACING	

SYMBOLS	DESCRIPTION	REFERENCE
2-PD5A	2 HOLDOWNS	
PB-1	WOOD POST & POST BASE	
2x12 @ 24" OC	EXTENT OF RAFTER OR JOIST FRAMING	
PX	SPECIAL TOP OF WALL PLATES	
"X"	"X" TYPE METAL DECKING SPAN DIRECTION SEE DECK SCHEDULE	
c=X"	CAMBER	
(AESS)	DENOTES ARCHITECTURALLY EXPOSED STRUCTURAL STEEL. SEE SPECIFICATION SECTION 05 12 13 FOR REQUIREMENTS.	
(X,Y,Z) OR (X)	WELDED STUDS	
C-X C-X	STEEL COLUMN	
	WELDED CONNECTION AT T&B FLANGE OF MOMENT FRAME BEAM	
	WELDED CONNECTION AT T&B FLANGE OF NON-MOMENT FRAME BEAM	
	WELDED CONNECTION AT TOP AND BOTTOM FLANGE OF NON-MOMENT FRAME BEAM	
F	MODIFICATION TO SHEAR PLATE F= FULL DEPTH SHEAR PLATE 1=1" BOLTS	
-D	DROPPED BEAM "D" NUMBER OF INCHES	
WT	WT SECTION ON TOP OR BELOW BEAM	
	LOWER FLANGE BRACE TO ADJACENT BEAM	
	LOWER FLANGE BRACE TO SLAB	
	SPLICE IN MEMBER	
BF-#	BRACED FRAME	
MF-#	MOMENT FRAME	
	BRACED FRAME ABOVE	
	BRACED FRAME BELOW	
	BRACED AT CHANGE IN T/S. ELEVATIONS	
SLRS OR DCW	NOTCH-TOUGH ELECTRODES	SEE SPECS
B	MECHANICAL SCREEN BRACE	
	BEND IN BEAM	
A X'-XX"	INDICATES BEAM WEB PENETRATION AND PENETRATION LOCATION FROM END OF BEAM	

ABBREVIATION	DESCRIPTION
(E)	EXISTING
(N)	NEW
ABV	ABOVE
ADDL	ADDITIONAL
ADJ	ADJACENT
AESS	ARCHITECTURALLY EXPOSED STRUCTURAL STEEL
ALT	ALTERNATE
APPRX	APPROXIMATE
AR	ANCHOR RODS
ARCH	ARCHITECT OR ARCHITECTURAL
B/	BOTTOM OF
B/B	BACK TO BACK
BAL	BALANCE
BF	BRACED FRAME
BLDG	BUILDING
BLK	BLOCK
BLKG	BLOCKING
BLW	BELOW
BM	BEAM
BOT	BOTTOM
BRDG	BRIDGING
BRG	BEARING
BS	BOTH SIDES
BTWN	BETWEEN
C	COMPRESSION
C/C	CENTER TO CENTER
CIP	CAST-IN-PLACE
CJP	COMPLETE JOINT PENETRATION
CL	CENTER LINE
CLR	CLEAR OR CLEARANCE
CMU	CONCRETE MASONRY UNIT
COL	COLUMN
COMP	COMPRESSION
CONC	CONCRETE
CONN	CONNECTION(S)
CONST	CONSTRUCTION
CONT	CONTINUOUS
CTR	CENTER(ED)
CTRSK	COUNTERSINK
db	DIAMETER OF BOLT OR REBAR
DBL	DOUBLE
DCW	DEMAND CRITICAL WELD
DEG	DEGREE(S)
DET	DETAIL
DF	DOUGLAS FIR
DIA	DIAMETER
DIAG	DIAGONAL
DIM(S)	DIMENSION(S)
DL	DEAD LOAD
DWG(S)	DRAWING(S)
DWL	DOWEL(S)
EA	EACH
ECC	ECCENTRICITY
EF	EACH FACE
EL	ELEVATION
ELEC	ELECTRICAL
EN	EDGE NAIL
ENGR	ENGINEER
EOS	EDGE OF SLAB
EQ	EQUAL
EQUIP	EQUIPMENT
EW	EACH WAY
EXP	EXPANSION
EXT	EXTERIOR
F/	FACE OF
F/F	FACE TO FACE
FF	FINISH FLOOR
FIN	FINISH(ED)
FLR	FLOOR
FND	FOUNDATION
FP	FIREPROOF(ING)
FRM'G	FRAMING
FS	FAR SIDE
FTG	FOOTING
GA	GAGE, GAUGE
GALV	GALVANIZED
GB	GRADE BEAM
GEN	GENERAL
GLB	GLUE-LAMINATED BEAM
GR	GRADE
HD	HOLDOWN
HK	HOOK
HORIZ	HORIZONTAL
HP	HIGH POINT
HSS	HOLLOW STRUCTURAL SECTION (TUBE STEEL)
HT	HEIGHT
ID	INSIDE DIAMETER
IF	INSIDE FACE
INFO	INFORMATION
INT	INTERIOR
INTRM	INTERMEDIATE
JH	JOIST HANGER
JST(S)	JOIST(S)
JT	JOINT
K	KIPS (1,000 POUNDS)
KLF	KIP PER LINEAR FOOT
KSF	KIP PER SQUARE FOOT
LBS	POUNDS
LCS	LAP COMPRESSION SPLICE
LL	LIVE LOAD
LLH	LONG LEG HORIZONTAL
LLV	LONG LEG VERTICAL
LONG	LONGITUDINAL
LP	LOW POINT

ABBREVIATION	DESCRIPTION
LSL	LAMINATED STRAND LUMBER
LTS	LAP TENSION SPLICE OR CLASS "B" LAP SPLICE
LVL	LAMINATED VENEER LUMBER
LW	LIGHTWEIGHT
LWC	LIGHTWEIGHT CONCRETE
M	MOMENT
MATL	MATERIAL
MAX	MAXIMUM
MB	UNFINISHED MACHINE BOLT
MC	MOMENT CONNECTION(S)
MECH	MECHANICAL
MEP	MECHANICAL, ELECTRICAL, PLUMBING, FIRE PROTECTION
MEZZ	MEZZANINE
MFR	MANUFACTURER
MID	MIDDLE
MIN	MINIMUM
MISC	MISCELLANEOUS
NIC	NOT IN CONTRACT
NO	NUMBER
NOM	NOMINAL
NS	NEAR SIDE
NTS	NOT TO SCALE
Nvd	NUMBER OF DIAGONAL SHEAR REINF BARS IN LINK BEAM
NW	NORMAL WEIGHT
NWC	NORMALWEIGHT CONCRETE
OC	ON CENTER
OD	OUTSIDE DIAMETER
OF	OUTSIDE FACE
OH	OPPOSITE HAND
OPNG(S)	OPENING(S)
OPP	OPPOSITE
OSB	ORIENTED STRAND BOARD
OSL	OUTSTANDING LEG
P/T	POST-TENSIONED
PAF	POWDER ACTUATED FASTENER
PC	PIECE
PCY	POUNDS PER CUBIC YARD
PERP	PERPENDICULAR
PG	PLATE GIRDER
PJP	PARTIAL JOINT PENETRATION
PL	PLATE
PLY	PLYWOOD
PRC	PRECAST
PRLL	PARALLEL
PSF	POUNDS PER SQUARE FOOT
PSI	POUNDS PER SQUARE INCH
PSL	PARALLEL STRAND LUMBER
PT	POINT
RAD	RADIUS
REF	REFERENCE
REINF	REINFORCE(D) (ING) OR (MENT)
REQD	REQUIRED
RWD	REDWOOD
SCHED	SCHEDULE(D)
SDL	SUPERIMPOSED DEAD LOAD
SECT	SECTION
SER	STRUCTURAL ENGINEER OF RECORD
SF	SQUARE FOOT (FEET)
SHT	SHEET
SIM	SIMILAR
SLRS	SEISMIC LOAD RESISTING SYSTEM
SMRF	SPECIAL MOMENT RESISITNG FRAME
SMS	SHEET METAL SCREW(S)
SOG	SLAB ON GRADE
SP	SPACE
SPEC(S)	SPECIFICATION(S)
SQ	SQUARE
STD	STANDARD
STL	STEEL
STR	STRUCTURE
STRCTL	STRUCTURAL
SYMM	SYMMETRICAL
T	TENSION
T&B	TOP AND BOTTOM
T&G	TONGUE AND GROOVE
T/	TOP OF
TD	TIE DOWN
TEMP	TEMPERATURE OR TEMPORARY
TEN	TENSION
THK	THICK OR THICKNESS
THRD'D	THREADED
TRANSV	TRANSVERSE
TYP	TYPICAL
UON	UNLESS OTHERWISE NOTED
V	SHEAR
VERT	VERTICAL
VIF	VERIFY IN FIELD
W/	WITH
W/O	WITHOUT
WD	WOOD
WF	WIDE FLANGE
WP	WORK POINT
WPFG	WATERPROOFING
WS	WATERSTOP
WT	WEIGHT
WWR	WELDED WIRE REINFORCEMENT

AXIS GFA

1130 WESTWOOD BLVD
LOS ANGELES, CA 90024
T 310.209.7520
F 310.209.7516
www.axisgfa.com

PROJECT NAME

Residence Inn® Marriott.

840 KILDARE STREET,
LANCASTER, CA

OWNER:

INSITE REAL STATE
DEVELOPMENT
6265 VARIEL AVENUE
WOODLAND HILLS, CA 91367

Thornton Tomasetti

Thornton Tomasetti, Inc.
707 Wilshire Blvd, Suite 4450
Los Angeles, CA 90017-3618
T 213.330.7000 F 213.330.7001

Project Status

REGISTERED PROFESSIONAL ENGINEER
SUDHAKAR GAUTRE, GAUTRE
No. S4416
Exp. 6/30/18
STRUCTURAL
STATE OF CALIFORNIA

NO.	DATE	ISSUES AND REVISIONS	BY
	10.13.17	DESIGN DEVELOPMENT	
	11.20.17	CD PROGRESS SET	
	12.18.17	PLAN CHECK	
	02.16.18	PLAN CHECK	

DATE

SCALE AS NOTED

PROJECT NUMBER

COMPUTER FILE S17081

PROJECT NAME

DESCRIPTION
LEGEND & ABBREVIATIONS

SHEET NUMBER
S0.02

ALL DRAWINGS AND WRITTEN MATERIAL APPEARING HEREIN CONSTITUTE ORIGINAL AND UNPUBLISHED WORK OF THE ARCHITECT AND MAY NOT BE DUPLICATED, USED OR DISCLOSED WITHOUT WRITTEN CONSENT OF THE ARCHITECT

GR GENERAL REQUIREMENTS

GR-1) AS USED IN THESE GENERAL NOTES:
"DRAWINGS" MEANS THE LATEST STRUCTURAL DESIGN DRAWINGS, UON.
"SPECIFICATIONS" MEANS THE LATEST PROJECT SPECIFICATIONS, UON.
"CONTRACT DOCUMENTS" IS DEFINED AS THE DESIGN DRAWINGS AND THE SPECIFICATIONS
"SER" IS DEFINED AS THE STRUCTURAL ENGINEER OF RECORD FOR THE STRUCTURE IN ITS FINAL CONDITION.
"DESIGN PROFESSIONALS" IS DEFINED AS THE OWNER'S ARCHITECT AND SER.
"MEP" INCLUDES, BUT IS NOT LIMITED TO MECHANICAL, ELECTRICAL, PLUMBING, FIRE PROTECTION.
"CONTRACTOR" IS DEFINED TO INCLUDE ANY OF THE FOLLOWING: GENERAL CONTRACTOR AND THEIR SUBCONTRACTORS, CONSTRUCTION MANAGER AND THEIR SUBCONTRACTORS, STRUCTURAL STEEL FABRICATOR OR STRUCTURAL STEEL ERECTOR.
"BASE BUILDING STRUCTURE" IS DEFINED AS THE STRUCTURAL FRAME DESIGNED BY THORNTON TOMASETTI.
"STRUCTURE IN ITS FINAL CONDITION" MEANS ALL STRUCTURAL ELEMENTS SHOWN ON THE STRUCTURAL CONTRACT DOCUMENTS ARE INSTALLED AND COMPLETELY CONNECTED AND INSPECTED WITH NO OUTSTANDING NON-COMPLIANCE ISSUES.

GR-2) THE CONTRACTOR IS RESPONSIBLE FOR COORDINATION OF THE STRUCTURAL WORK WITH THE ARCHITECTURAL, CIVIL, MEP CONTRACT DOCUMENTS, AS WELL AS ANY OTHER APPLICABLE TRADES.

GR-3) THE CONTRACTOR IS RESPONSIBLE FOR THE STABILITY OF THE STRUCTURE UNTIL THE CONSTRUCTION OF THE STRUCTURE REACHES ITS FINAL CONDITION.

GR-4) THE CONTRACTOR IS SOLELY RESPONSIBLE FOR THE DESIGN, INSTALLATION, AND REMOVAL OF TEMPORARY BRACING AND CONSTRUCTION SUPPORTS, FOR NEW AND EXISTING STRUCTURES, AS NECESSARY TO COMPLETE THE PROJECT. NO PORTION OF THE PROJECT WHILE UNDER CONSTRUCTION IS INTENDED TO BE STABLE IN THE ABSENCE OF THE CONTRACTOR'S TEMPORARY SUPPORTS AND BRACES. CONTRACTOR SHALL RETAIN A STRUCTURAL ENGINEER LICENSED IN THE STATE IN WHICH THE PROJECT IS LOCATED TO DESIGN TEMPORARY BRACING AND CONSTRUCTION SUPPORTS.

GR-5) LATERAL LOAD RESISTANCE AND STABILITY OF THE STRUCTURE IN ITS FINAL CONDITION IS PROVIDED BY SHEARWALLS AND LATERAL STABILITY OF OTHER ELEMENTS IS PROVIDED THROUGH FLOOR SLABS; ROOF DECK.

GR-6) THE SPECIFICATIONS ARE AN INTEGRAL PART OF THE CONTRACT DOCUMENTS AND SHALL BE USED IN CONJUNCTION WITH THE STRUCTURAL DRAWINGS.

GR-7) THE CONTRACTOR SHALL VERIFY ALL EXISTING DIMENSIONS AND CONDITIONS AND COORDINATE WITH THE STRUCTURAL DRAWINGS, ARCHITECTURAL DRAWINGS, DRAWINGS FROM OTHER CONSULTANTS, PROJECT SHOP DRAWINGS AND FIELD CONDITIONS.

GR-8) IN CASES OF CONFLICT BETWEEN DRAWINGS AND/OR SPECIFICATIONS AND OTHER DISCIPLINES OR EXISTING CONDITIONS, CONTRACTOR SHALL NOTIFY THE DESIGN PROFESSIONALS AND OBTAIN CLARIFICATION PRIOR TO BIDDING AND PROCEEDING WITH WORK.

GR-9) APPLY DETAILS, SECTIONS, AND NOTES ON THE DRAWINGS WHERE CONDITIONS ARE SIMILAR TO THOSE INDICATED BY DETAIL, DETAIL TITLE OR NOTE.

GR-10) ONLY USE DIMENSIONS INDICATED ON THE DRAWINGS. DO NOT SCALE DRAWINGS.

GR-11) ASSUME EQUAL SPACING BETWEEN ESTABLISHED DIMENSIONS, IF NOT INDICATED ON DRAWINGS.

GR-12) CENTERLINES OF COLUMNS AND FOUNDATIONS COINCIDE WITH GRID LINE INTERSECTIONS, UON.

GR-13) CENTERLINES OF GRADE BEAMS AND WALLS COINCIDE WITH CENTERLINES OF FOUNDATIONS, UON.

GR-14) CENTERLINES OF FRAMING MEMBERS COINCIDE WITH COLUMN CENTERLINES, UON.

GR-15) THE CONTRACTOR SHALL PROTECT EXISTING FACILITIES, STRUCTURES AND UTILITIES FROM DAMAGE.

GR-16) THE CONTRACTOR SHALL VERIFY THAT CONSTRUCTION LOADS DO NOT EXCEED THE CAPACITY OF THE STRUCTURE AT THE TIME THE LOAD IS APPLIED.

GR-17) THE CONTRACTOR SHALL COORDINATE THE BOTTOM OF BASE PLATE ELEVATIONS WITH THE AS-BUILT TOP OF SUPPORT ELEVATIONS.

GR-18) THE CONTRACTOR SHALL VERIFY ALL OPENING SIZES AND LOCATIONS WITH OTHER DISCIPLINES. THE DRAWINGS DO NOT SHOW ALL OPENINGS REQUIRED. ADDITIONAL OPENINGS, BLOCKOUTS AND SLEEVES MAY BE REQUIRED BY OTHER DISCIPLINES AND SHALL BE CONSTRUCTED USING THE TYPICAL DETAILS AND/OR THE CRITERIA INDICATED ON THE DRAWINGS. OPENINGS REQUIRED BUT NOT SHOWN ON THE STRUCTURAL DRAWINGS MUST BE APPROVED BY THE STRUCTURAL ENGINEER.

GR-19) ELEVATIONS INDICATED ON STRUCTURAL DRAWINGS ARE BASED ON A PROJECT DATUM INDICATED ON THE ARCHITECTURAL DRAWINGS.

CD CODES AND DESIGN CRITERIA

CD-1) PERFORM ALL CONSTRUCTION IN CONFORMANCE WITH THE BUILDING AND DESIGN CODES REFERENCED WITHIN THESE DOCUMENTS. THE PROJECT DOCUMENTS REFER TO THE FOLLOWING CODES AND STANDARDS, UON:

2016 CALIFORNIA BUILDING CODE (CBC)

CD-2) RISK CATEGORY:II

CD-3) SEE DESIGN LOAD DIAGRAMS ON SHEET S0.40 FOR LOCATIONS AND EXTENT OF LIVE LOAD.

CD-4) SNOW LOADS:

FLAT ROOF SNOW LOAD (Pf):	**0** PSF
GROUND SNOW LOAD (Pg)	**0** PSF

CD-5) WIND LOAD DESIGN DATA:

MAIN WIND FORCE RESISTING SYSTEM	
BASIC WIND SPEED, V	**110** MPH
EXPOSURE	**B**
RISK/OCCUPANCY CATEGORY	**II**
WIND IMPORTANCE FACTOR (Iw)	**1.0**
BUILDING CATEGORY	ENCLOSED
INTERNAL PRESSURE COEFFICIENT	+0.18

COMPONENT AND CLADDING DESIGN PRESSURES a=19'-10"

EFFECTIVE WIND AREA=	1 PSF
WALL=	26.2 PSF
WALL END ZONE=	32.3 PSF

ROOF EFFECTIVE WIND AREA=	1 PSF
ROOF=	26.4 PSF
ROOF EDGE=	44.4 PSF
ROOF CORNER=	66.8 PSF

CD-7) SEISMIC LOAD DESIGN DATA:

SEISMIC IMPORTANCE FACTOR (Ie)	1.0
SUPERSTRUCTURE (WOOD FRAME)	
Ss	1.784
S1	0.628
SDS	1.189
SD1	0.628
SITE CLASS	D
SUPERSTRUCTURE	
SEISMIC DESIGN CATEGORY	D
LATERAL SYSTEM DESCRIPTION	LIGHT FRAMED BEARING WALLS SHEATHED WITH WOOD STRUCTURAL PANELS RATED FOR SHEAR RESISTANCE
SEISMIC RESPONSE COEFFICIENT (Cs)	0.183
RESPONSE MODIFICATION FACTOR (R)	6.5
ANALYSIS PROCEDURE DESCRIPTION	EQUIVALENT LATERAL FORCE,
DESIGN BASE SHEAR	645 KIPS
COMPONENT IMPORTANCE FACTOR (Ip)	1.0
SUBSTRUCTURE (CONCRETE)	
SEISMIC DESIGN CATEGORY	D
LATERAL SYSTEM DESCRIPTION	SPECIAL REINFORCED CONCRETE BEARING WALLS
RESPONSE COEFFICIENT (Cs)	0.238
RESPONSE MODIFICATION FACTOR (R)	5
ANALYSIS PROCEDURE DESCRIPTION	EQUIVALENT LATERAL FORCE,
DESIGN BASE SHEAR	2604 KIPS
COMPONENT IMPORTANCE FACTOR (Ip)	1.0

CD-8) IN CASES WHERE THE CONTRACTOR DETERMINES THAT SUSPENDED OR FLOOR MOUNTED MEP EQUIPMENT LOADS EXIST WHICH EXCEED DESIGN LOADS INDICATED ON CONTRACT DOCUMENTS, CONTRACTOR SHALL SUBMIT LOAD DATA TO DESIGN PROFESSIONALS FOR REVIEW PRIOR TO PROCEEDING WITH WORK.

CD-9) DISTRIBUTE THE MAXIMUM LOAD HUNG FROM ANY STRUCTURAL MEMBER FOR MEP DUCTWORK, PIPING ETC OVER THE MEMBER'S TRIBUTARY AREA IN A WAY THAT THE DESIGN SUPERIMPOSED DEAD LOADS LISTED IN CONTRACT DOCUMENTS ARE NOT EXCEEDED. THE CONTRACTOR SHALL COORDINATE THE LOADS OF ALL TRADES AND PROVIDE ADDITIONAL SUPPORT OR DISTRIBUTION FRAMING AS REQUIRED TO ACHIEVE THE ALLOWABLE LOAD DISTRIBUTION.

CD-10) ELEVATOR GUIDERAIL SUPPORTS, MACHINE ROOMS, PITS, AND PENTHOUSES ARE BASED ON ELEVATOR TYPES INDICATED ON ARCHITECTURAL CONTRACT DOCUMENTS. CONTRACTOR SHALL SUBMIT FOR REVIEW ANY PLANNED CHANGE TO ELEVATORS TO DESIGN PROFESSIONALS PRIOR TO SUBMITTING CORRESPONDING STRUCTURAL SHOP DRAWINGS FOR ACTION.

CD-11) STRUCTURAL COMPONENTS ARE NOT DESIGNED FOR VIBRATING EQUIPMENT. MOUNT VIBRATING EQUIPMENT ON VIBRATION ISOLATORS.

CD-12) SERVICEABILITY

LIVE LOAD DEFLECTION IS LESS THAN **L/360**

LONG-TERM TOTAL DEFLECTION IS LESS THAN **L/240**

EXTERIOR SPANDRELS HAVE BEEN DESIGNED TO LIMIT LIVE LOAD MIDSPAN VERTICAL DEFLECTION TO 1/**360** OF THE SPAN OR **1/4"**, WHICHEVER IS LESS.

EXTERIOR SPANDRELS HAVE BEEN DESIGNED TO LIMIT DEAD PLUS SUPERIMPOSED DEAD LOAD MIDSPAN VERTICAL DEFLECTION TO 1/**240** OF THE SPAN OR **3/4"**, WHICHEVER IS LESS.

LATERAL DRIFT DUE TO **WIND** LOADS IS LESS THAN OR EQUAL TO **H/400**

CD-13) CONNECTIONS OF SYSTEMS DESIGNED BY CONTRACTOR'S ENGINEER SUCH AS, BUT NOT LIMITED TO, CLADDING, STAIRS, ELEVATORS, ESCALATORS, PRECAST STADIA, AND MEP LOADS ARE ASSUMED TO IMPOSE VERTICAL AND/OR HORIZONTAL LOADS ON THE BASE BUILDING STRUCTURAL MEMBERS WITHOUT GENERATING TORSION IN THE SUPPORTING STRUCTURAL MEMBERS. CONTRACTOR IS RESPONSIBLE FOR FURNISHING AND INSTALLING ALL SUPPLEMENTARY BRACING MEMBERS AS REQUIRED TO PREVENT TORSION ON THE BASE BUILDING STRUCTURE.

CD-14) FOR FIRE RATING AND FIREPROOFING ASSEMBLY EVALUATIONS, CONSIDER THE FOLLOWING ASSEMBLIES RESTRAINED: COMPOSITE WIDE-FLANGE STEEL FRAMING, INTERIOR BAYS OF CONTINUOUS CAST-IN-PLACE CONCRETE CONSTRUCTION. CONSIDER ALL OTHER ASSEMBLIES UNRESTRAINED.

FN FOUNDATIONS

FN-1) THE FOUNDATION DESIGN IS BASED ON THE GEOTECHNICAL INVESTIGATION REPORT BY BRUIN GEOTECHNICAL SERVICES, INC DATED AUGUST 22, 2017.

FN-2) FOUNDATIONS HAVE BEEN DESIGNED BASED ON THE FOLLOWING DESIGN VALUES FROM THE GEOTECHNICAL INVESTIGATION REPORT:

NET ALLOWABLE BEARING CAPACITY: 1800-3333 PSF

SEE GEOTECHNICAL REPORT FOR ADDITIONAL REQUIREMENTS AND INFORMATION. DESIGN VALUES SHALL BE FIELD VERIFIED BY QUALIFIED GEOTECHNICAL CONSULTANT RETAINED BY THE OWNER .

FN-3) THE CONTRACTOR SHALL VERIFY FOUNDATION INSTALLATION AND CONSTRUCTION IS IN CONFORMANCE WITH THE RECOMMENDATIONS OUTLINED IN THE GEOTECHNICAL REPORT.

FN-4) CONTRACTOR SHALL BE RESPONSIBLE TO ADEQUATELY PROTECT ALL EXCAVATION. WHERE NECESSARY, SHEET AND SHORE THE EXCAVATION WITH ALL REQUIRED TIEBACKS AND BRACING AS DETERMINED BY CONTRACTOR'S STRUCTURAL ENGINEER.

FN-5) PROVIDE BRACING FOR ALL BASEMENT FOUNDATION WALLS PRIOR TO BACKFILLING. THIS BRACING SHALL REMAIN IN PLACE UNTIL ALL SLABS AND BEAMS FRAMING INTO WALL HAVE BEEN PLACED AND HAVE ATTAINED 100 PERCENT OF THEIR DESIGN STRENGTH.

FN-6) DO NOT BACKFILL AGAINST CANTILEVER RETAINING WALLS UNTIL THE CONCRETE HAS ATTAINED **[100]** PERCENT OF ITS DESIGN STRENGTH.

CM CONCRETE MATERIALS

CM-1) CONCRETE STRENGTHS AND WEIGHT (SEE SPECIFICATION SECTION 03 30 00 FOR ADDITIONAL CONCRETE PROPERTIES):

LOCATION	MIN COMPRESSIVE STRENGTH (PSI)	MAX WEIGHT (PCF)	MIN/MAX % CLASS F FLY ASH	MIN/MAX % SLAG	MAX TOTAL % FLY ASH AND SLAG
FOOTINGS / GRADE BEAMS	4000 @ 56 DAYS	145	15-25	0-30	40
SLAB ON GRADE	3000 @ 28 DAYS	145	15-25	0-30	40
WALLS / COLUMNS	4000 @ 28 DAYS	145	15-30	0-50	50
SHOTCRETE	4000 @ 28 DAYS	145	15-25	0-30	40
SLAB & BEAMS	5000 @ 28 DAYS	145	10-20	0-30	40

CM-2) ALL CONCRETE SHALL BE THOROUGHLY CONSOLIDATED.

CM-3) THE USE OF CALCIUM CHLORIDE AND OTHER CHLORIDE CONTAINING AGENTS IS PROHIBITED. THE USE OF RECYCLED CONCRETE IS PROHIBITED. PLACEMENT WITHIN AND CONTACT BETWEEN ALUMINUM ITEMS, INCLUDING ALUMINUM CONDUIT, AND CONCRETE IS PROHIBITED.

CM-4) SUBMIT CONCRETE MIX DESIGNS FOR EACH DESIGN AND STRENGTH OF CONCRETE. MIX DESIGNS SHALL BE PREPARED OR REVIEWED BY AN APPROVED INDEPENDENT TESTING AGENCY RETAINED BY THE CONTRACTOR IN ACCORDANCE WITH REQUIREMENTS OF ACI 301 AND ACI 318, SIGNED BY A REGISTERED DESIGN PROFESSIONAL LICENSED TO PRACTICE AS A PROFESSIONAL ENGINEER IN THE STATE WHERE THE PROJECT IS LOCATED, AND SHALL BE COORDINATED WITH DESIGN REQUIREMENTS AND CONTRACT DOCUMENTS. MIX DESIGN TO INCLUDE COMPRESSIVE STRENGTH TEST REPORTS IN ACCORDANCE WITH ACI 318
CHAPTER 5.

CM-5) CONCRETE PRODUCTS:

A. PORTLANT CEMENT: ASTM C150, TYPE I, TYPE II, TYPE II/V OR TYPE V.
B. AGGREGATES FOR NORMALWEIGHT CONCRETE: ASTM C 33. MAXIMUM AGGREGATE SIZE FOR FOOTINGS, PIERS, AND SLAB-ON-GRADE IS NO. 57. MAXIMUN AGGREGATE SIZE FOR ALL OTHER LOCATIONS IS NO. 67.
C. FINE AGGREGATE: NATURAL SAND, OR SAND PREPARED FROM STONE OR GRAVEL, CLEAN, HARD, DURABLE, UNCOATED AND FREE FROM SILT, LOAM AND CLAY.
D. FLY ASH: ASTM C 618, CLASS C OR CLASS F.
E. AIR ENTRAINING ADMIXTURE: ASTM C 260.
F. WATER-REDUCING ADMIXTURE: ASTM C 494,
G. SPRINKAGE REDUCING ADMIXTURES: ASTM C 157
H. WATER: ASTM C 94 AND ASTM C 1602.

CM-6) WATER-CEMENTITIOUS MATERAILS RATIO (W/C):

A. ALL CONCRETE EXPOSED TO FREEZING AND THAWING IN MOIST CONDITION AND/OR REQUIRED TO BE WATERTIGHT OR USED IN SLABS-ON-GRADE SHALL HAVE A MAXIMUM W/C RATIO OF 0.45.
B. ABSENT THE ABOVE CONDITIONS, ALL CONCRETE WITH REQUIRED STRENGTH OF 4000 PSI OR HIGHER SHALL HAVE A MAXIMUM W/C RATIO OF 0.50.

CM-7) SLUMP:

A. CONCRETE WITHOUT HIGH RANGE WATER-REDUCING ADMIXTURE TO HAVE A MAXIMUM SLUMP OF 8".
B. CONCRETE WITH HIGH RANGE WATER-REDUCING ADMIXTURE: CONCRETE SLUMP PRIOR TO ADDITION OF HIGH RANGE WATER-REDUCING ADMIXTURE SHALL NOT EXCEED 3" FOR NORMAL WEIGHT CONCRETE AND 4" FOR LIGHTWEIGHT CONCRETE AFTER
ADDITION OF WATER-REDUCING ADMIXTURE, THE CONCRETE SHALL HAVE A MAXIMUM SLUMP OF 9" UNLESS OTHERWISE APPROVED BY THE SER.
C. CONCRETE FOR DRILLED PIERS: 6" +/-1" MAXIMUM.

CM-8) CONDUCT STRENGTH TESTS OF CONCRETE AS FOLLOWS:

A. TEST CONCRETE FOR REQUIRED COMPRESSIVE STRENGTH IN ACCORDANCE WITH ACI 318 CHAPTER 5.
B. SECURE SAMPLE SETS IN ACCORDANCE WITH ASTM C 172. MOLD AND CURE CYLINDERS IN ACCORDANCE WITH ASTM C 31.
C. SAMPLES FOR EACH CONCRETE DESIGN MIX PLACED EACH DAY SHALL BE TAKEN NOT LESS THAN ONCE A DAY, NOR LESS THAN ONCE FOR EACH 100 CU.YD. OF CONCRETE, NOR LESS THAN ONCE FOR EACH 5000 SQUARE FEET OF SURFACE AREA FOR SLABS OR WALLS.
D. QUANTITY OF CYLINDERS SHALL BE AT LEAST TWO 6 INCH DIAMETER BY 12 INCH LONG CYLINDERS OR AT LEAST THREE 4 INCH DIAMETER BY 8 INCHES LONG CYLINDERS.
E. TRANSPORT SPECIMEN CYLINDERS FROM JOB TO LABORATORY AFTER CYLINDERS HAVE CURED FOR 24-HOURS ON SITE.
F. TEST CYLINDERS IN ACCORDANCE WITH ASTM C 39.

CM-9) MIXING:

A. ALL CONCRETE SHALL BE READY-MIXED CONFORMING TO ASTM C 94.
B. METHODS OF MIXING SHALL COMPLY WITH ACI 318 CHAPTER 5.8.

CM-10) PLACE CONCRETE CONTINUOUSLY WITHOUT INTERRUPTION BETWEEN PREDETERMINED CONSTRUCTION AND CONTRACTION JOINTS. DEPOSIT AND CONSOLIDATE CONCRETE SLABS IN A CONTINUOUS OPERATION, WITHIN LIMITS OF CONSTRUCTION JOINTS, UNTIL COMPLETING PLACEMENT OF A PANEL OR SECTION. EMPLOY MECHANICAL VIBRATING EQUIPMENT IN ACCORDANCE WITH ACI 309R AS REQUIRED TO ACHIEVE THOROUGH CONSOLIDATION.

CM-11) COMPLY WITH RECOMMENDATIONS FOR CONCRETE FINISHING ESTABLISHED BY ACI 302.1R AND ACI 304R.

CM-12) COMPLY WITH DIMENSIONAL TOLERANCE LIMITATIONS GIVEN BY ACI 117 EXCEPT AS MODIFIED IN THE CONSTRUCTION DOCUMENTS.

CM-13) PROTECT CONCRETE FROM PREMATURE DRYING, EXCESSIVE HOT OR COLD TEMPERATURE, AND DAMAGE.

CM-14) CONCRETE SHALL BE KEPT CONTINUOUSLY MOIST AND ABOVE 50°F FOR SEVEN DAYS (ASTM C 150 TYPE I CEMENT) OR FOR 10 DAYS (ASTM C 150 TYPE II CEMENT). HIGH EARLY STRENGTH CONCRETE USAGE SHALL BE MAINTAINED OVER 50°F FOR THREE DAYS.

CM-15) FORMWORK:

A. DESIGN OF FORMWORK AND ITS REMOVAL IS THE CONTRACTOR'S RESPONSIBILITY.
B. FORMWORK SHALL CONFORM TO AMERICAN CONCRETE INSTITUTE'S "RECOMMENDED PRACTUCE FOR CONCRETE FORMWORK" (ACI 347) AND ACI 318 CHAPTER 6.
C. USE PLYWOOD, FIBERGLASS, METAL, METAL-FRAMED PLYWOOD FACED, OR OTHER ACCEPTABLE PANEL-TYPE MATERIALS TO PROVIDE CONTINUOUS, STRAIGHT, SMOOTH, EXPOSED SURFACES.
D. PROVIDE FORMS FOR FOOTINGS WHEREVER CONCRETE CANNOT BE PLACED AGAINST SOLID EARTH EXCAVATION.
E. REMOVE LOOSE DIRT AND DEBRIS FROM FORMS PRIOR TO CONCRETE POURS.

TOPPING SLABS:
SHALL HAVE FC=2500 PSI MIN
FOR SLABS UP TO 3" THICK USE #3@16" EW
FOR SLABS UP TO 6" THICK USE #4@16" EW

RE CONCRETE REINFORCEMENT

RE-1) ALL CONCRETE SHALL INCLUDE REINFORCEMENT. IF REINFORCEMENT IS NOT SPECIFICALLY INDICATED ON THE DRAWINGS, VERIFY WITH THE STRUCTURAL ENGINEER BEFORE PROCEEDING WITH WORK.

RE-2) REINFORCEMENT SHALL CONFORM TO THE FOLLOWING STANDARDS AND MATERIAL PROPERTIES:

DEFORMED BARS:	ASTM A615, GRADE 60, UON
WELDABLE DEFORMED BARS:	ASTM A706, GRADE 60, UON
EPOXY COATED DEFORMED BARS:	ASTM A615, GRADE 60, UON / A775
WELDED WIRE REINFORCEMENT	ASTM A185
EPOXY COATED WELDED WIRE REINFORCEMENT	ASTM A185 / A884
WELDED BAR ANCHORS:	NELSON D2L DEFORMED BAR
ANCHORS	(ICC-ES REPORT ER-5217)

RE-3) DETAIL REINFORCEMENT BASED ON THE PROJECT REQUIREMENTS, ACI-318 AND ACI-315, UON.

RE-4) WHERE A 90-DEG, 135 -DEG OR 180-DEG HOOK IS GRAPHICALLY INDICATED, PROVIDE CORRESPONDING ACI STANDARD HOOKS, UON.

RE-5) DOWELS SHALL MATCH SIZE AND SPACING OF MAIN REINFORCEMENT, UON.

RE-6) REINFORCEMENT SHALL HAVE CONCRETE PROTECTION (CLEAR COVER) PER ACI 318 UNLESS OTHERWISE INDICATED ON THE DRAWINGS.

LOCATION	COVER
CONCRETE CAST AGAINST AND PERMANENTLY EXPOSED TO EARTH	3"
CONCRETE EXPOSED TO EARTH OR WEATHER:	
NO 5 BARS OR SMALLER	1 1/2"
NO 6 BARS AND LARGER	2"
CONCRETE NOT EXPOSED TO WEATHER OR IN CONTACT WITH GROUND	
SLABS, WALLS, JOISTS:	
NO 11 BARS OR SMALLER	3/4"
NO 14 BARS AND LARGER	1 1/2"
BEAMS, COLUMNS: PRIMARY REINFORCEMENT, TIES, STIRRUPS, SPIRALS	1 1/2"
SHELLS, FOLDED PLATE MEMBERS:	
NO 11 BARS OR SMALLER	1/2"
NO 14 BARS AND LARGER	3/4"

RE-7) REBAR SHOP DRAWINGS: SUBMIT SHOP DRAWINGS THAT SHALL CLEARLY INDICATE ALL DETAILS, DIMENSIONS AND INFORMATION REQUIRED FOR FABRICATION AND PLACEMENT OF CONCRETE REINFORCEMENT IN ACCORDANCE WITH CONTRACT DOCUMENTS, PREPARED IN ACCORDANCE WITH ACI 315 REQUIREMENTS.

RE-8) REINFORCING STEEL SHALL NOT BE PERMITTED TO RUST WHERE THERE IS DANGER OF STAINING EXPOSED SURFACES OF ADJACENT CONCRETE. THE CONTRACTOR SHALL REPLACE RUST-STAINED CONCRETE AT HIS EXPENSE.

RE-9) REINFORCEMENT SHALL BE FREE OF FORM COATINGS, SEALERS, POWDERED AND SCALED RUST, LOOSE MILL SCALE, EARTH, ICE, AND OTHER MATERIALS WHICH WILL REDUCE OR DESTROY BOND WITH CONCRETE.

RE-10) PLACE REINFORCEMENT IN ACCORDANCE WITH APPROVED SHOP DRAWINGS, ACI 318, AND CRSI RECOMMENDED PRACTICE FOR "PLACING REINFORCING BARS". PLACE REINFORCEMENT BARS WITHIN TOLERANCES SPECIFIED IN ACI 117 AND ACI 318 SECTION 7.5.

RE-11) POSITION, SUPPORT AND SECURE REINFORCEMENT IN A MANNER TO PREVENT DISPLACEMENT BEFORE AND DURING PLACEMENT OF CONCRETE.

RE-12) WELDING ELECTRODES: SHALL BE IN CONFORMANCE WITH AWS D1.4 AND AWS A5.1. WELDED JOINTS OF ASTM A706, GRADE 60 BARS SHALL BE MADE WITH LOW HYDROGEN WELD FILLER METALS CLASSIFIED AS E80 ELECTRODES WITH A MINIMUM TENSILE STRENGTH OF 80K.

RE-13) LAP REINFORCEMENT AS SPECIFICALLY DETAILED ON THE DRAWINGS. SEE REBAR OFFSET AND LAP SPLICE SCHEDULE, 1/S0-51

RE-14) UNLESS OTHERWISE NOTED ALL LAP SPLICES ARE TO BE CLASS "B" SPLICES PER REBAR OFFSET AND LAP SPLICE SCHEDULE, 1/S0.51.

RE-15) PROVIDE MECHANICAL SPLICES FOR BARS LARGER THAN #11 OR WHERE INDICATED.
PROVIDE TENSILE, PRE-QUALIFIED, WELDED OR THREADED MECHANICAL SPLICES UON.

RE-16) PROVIDE LAP LOCATIONS AS FOLLOWS, UON:

A. GRADE BEAM / WALL (TOP HORIZONTAL REINFORCEMENT): AT CENTER OF SPAN
B. GRADE BEAM / WALL (BOTTOM HORIZONTAL REINFORCEMENT): AT SUPPORTS
C. WALL INSIDE FACE (VERTICAL REINFORCEMENT): AT SUPPORT
D. WALL OUTSIDE FACE (VERTICAL REINFORCEMENT): AT MIDHEIGHT OF WALL
E. UNLESS OTHERWISE NOTED TERMINATE BARS AT DISCONTINUOUS ENDS WITH STANDARD HOOKS

RE-17) PROVIDE EPOXY COATED REINFORCEMENT AND ACCESSORIES IN AREAS OF DIRECT EXPOSURE TO THE ENVIRONMENT, CHEMICALS, OR DE-ICING FOR THE AREAS INDICATED
ON THE DRAWINGS.

RE-18) TERMINATION OF REINFORCEMENT, UON:

A. TERMINATE ALL BARS IN LAPS, 90 DEGREE BENDS, OR WITH DOWELS INTO EXISTING CONCRETE.

B. BEND TOP MAT OR FOOTING BARS DOWN TO BOTTOM BARS AT ENDS.

C. BEND BOTTOM MAT OR FOOTING BARS UP WITH STANDARD 90 DEGREE BENDS.

D. PROVIDE DOWELS FROM FOOTINGS AND SLABS INTO WALLS AND COLUMNS TO MATCH SIZE AND SPACING OF VERTICAL REINFORCEMENT.

CJ CONCRETE CONSTRUCTION JOINTS

CJ-1) PROVIDE CONSTRUCTION JOINTS IN ACCORDANCE WITH ACI-318. SUBMIT SHOP DRAWINGS SHOWING PROPOSED CONSTRUCTION JOINT LOCATIONS, DETAILS AND THE PLACEMENT SEQUENCE FOR THE STRUCTURAL ENGINEER'S APPROVAL PRIOR TO PROCEEDING WITH WORK.

CJ-2) NO HORIZONTAL CONSTRUCTION JOINTS WILL BE PERMITTED IN BEAMS, UPTURNED BEAMS, WALLS AND SLABS UNLESS SPECIFICALLY SHOWN ON THE DRAWINGS OR APPROVED IN WRITING BY THE DESIGN PROFESSIONALS PRIOR TO CONSTRUCTION.

CJ-3) PLACE VERTICAL CONSTRUCTION JOINTS IN WALLS TO PROVIDE A 60 FT MAXIMUM LENGTH OF CONCRETE PLACEMENT AND LOCATE AS FOLLOWS:

A. FOUNDATION WALLS: MINIMUM OF 8 FT FROM ANY COLUMN LINE OR WALL OPENING

B. GRADE BEAMS SUPPORTING FOUNDATION WALLS: AT CENTERLINES BETWEEN SUPPORTS

C. RETAINING WALLS: 60 FT MAXIMUM LENGTH OF CONCRETE PLACEMENT

CJ-4) PROVIDE CONTINUOUS WATERSTOPS AT ALL CONSTRUCTION JOINTS EXPOSED TO SOIL OR WATER, AS DESCRIBED IN THE SPECIFICATIONS.

MA MASONRY

MA-1) LOAD BEARING AND BACKUP WALL CONCRETE MASONRY CONSTRUCTION SHALL CONFORM TO THE FOLLOWING MATERIAL STANDARDS:

CONCRETE BLOCK:	ASTM C90, MEDIUM WEIGHT - TYPE I
MORTAR:	ASTM C270, TYPE S OR M PORTLAND CEMENT / LIME ONLY (USE TYPE M MORTAR WHEN MASONRY IS IN DIRECT CONTACT WITH SOIL; TYPE S IN ALL OTHER CONDITIONS)
GROUT:	ASTM C476 (MINIMUM 28 DAY COMPRESSIVE STRENGTH OF 2000 PSI)
REINFORCEMENT:	ASTM A615, GRADE 60
JOINT REINFORCEMENT:	ASTM A82, TRUSS OR LADDER TYPE
EXTERIOR JT REINF:	GALVANIZE PER ASTM A153
INTERIOR JT REINF:	GALVANIZE PER ASTM A641

M2-) THE MINIMUM COMPRESSIVE STRENGTH OF THE MASONRY (F' M) SHALL BE 2,000 PSI, UON, AS DETERMINED IN ACCORDANCE WITH THE ABOVE REFERENCED SPECIFICATIONS FOR MASONRY STRUCTURES.

MA-3) PLACE MASONRY UNITS WITH FULL FACESHELL MORTAR COVERAGE ON HORIZONTAL AND VERTICAL FACE SHELLS. WEBS SHALL ALSO HAVE FULL MORTAR COVERAGE AROUND ALL GROUTED CELLS.

MA-4) LAY MASONRY UNITS IN RUNNING BOND UON.

MA-5) ALL MASONRY SHALL INCLUDE REINFORCEMENT. IF REINFORCEMENT IS NOT SPECIFICALLY INDICATED ON THE DRAWINGS, VERIFY WITH THE STRUCTURAL ENGINEER.

MA-6) CALCIUM CHLORIDE SHALL NOT BE USED IN MORTAR OR GROUT.

MA-7) ALL CELLS SHALL BE FULLY GROUTED.

SS STRUCTURAL STEEL

SS-1) STEEL MATERIALS:

SHAPE	MATERIAL
WIDE FLANGES & WT'S	ASTM A992, GRADE 50
MISCELLANEOUS PLATES	ASTM A36
CONTINUITY PLATES	ASTM A572, GRADE 50
ANGLES & CHANNELS	ASTM A36
RECTANGULAR HSS (TUBES)	ASTM A500, GRADE B
ROUND HSS	ASTM A500, GRADE B
BOLTS	ASTM A325 N, UON
ANCHOR RODS	ASTM F1554, Fy=36ksi, UON
THREADED RODS	ASTM A36
STEEL JOIST	PER STEEL JOIST INSTITUTE'S SPECIFICATIONS
WELDING ELECTRODES	E70, SEE SPECIFICATIONS FOR CVN REQUIREMENTS
WELDED STUDS	ASTM A108 HEADED STUDS: TYPE H4L OR S3L BY NELSON OR EQUAL.

SS-2) WHERE NO CAMBER IS INDICATED, FABRICATE BEAMS SO THAT ANY NATURAL CAMBER IS UPWARD AFTER ERECTION.

SS-3) SPLICES SHALL BE ALLOWED ONLY AT LOCATIONS SPECIFICALLY INDICATED ON THE STRUCTURAL DRAWINGS UNLESS APPROVED OTHERWISE BY THE SER IN WRITING.

SS-4) FOR STEEL MEMBERS AND EMBEDMENTS EXPOSED TO WEATHER, PROVIDE HOT-DIPPED GALVANIZED FINISH.

SS-5) PROVIDE HOLES IN ALL STEEL AS REQUIRED TO PREVENT ANY ACCUMULATION OF WATER. ALL PENETRATIONS THROUGH MAIN MEMBERS SHALL NOT EXCEED 1 1/8"Ø AND SHALL BE GROUND SMOOTH. THESE DRAINS MUST BE KEPT CLEAN AND OPEN.

SS-6) SHOW ALL COPES, HOLES, OPENINGS AND MODIFICATIONS REQUIRED IN STRUCTURAL STEEL MEMBERS FOR ERECTION OR THE WORK OF OTHER TRADES ON THE SHOP DRAWINGS FOR APPROVAL BY THE ARCHITECT AND STRUCTURAL ENGINEER.

SS-7) FIELD MODIFICATION OF STR

SC STRUCTURAL STEEL CONNECTIONS

SC-1) ALL WELDING SHALL CONFORM TO THE REQUIREMENTS OF THE STRUCTURAL WELDING CODE, ANSI/AWS D1.1, LATEST EDITION. ALL WELD SIZES SHALL BE THE LARGER OF THE SIZE REQUIRED BY CONNECTION FORCES, THE MINIMUM SIZE PER ANSI/AWS D1.1, OR 3/16 INCH MINIMUM FILLET WELD UON. ANY WELD SIZES SHOWN ON THE DESIGN DRAWINGS ARE CONSIDERED EFFECTIVE WELD SIZES AND SHALL BE INCREASED IN ACCORDANCE WITH AWS AS REQUIRED BY GAPS OR SKEWS BETWEEN COMPONENTS.

SC-2) WELDING EXPOSED TO LOW (OUTDOOR) TEMPERATURES IN SERVICE SHALL CONFORM TO AWS D1.5.

WD WOOD

WD-1) ALL FRAMING LUMBER SHALL BE DOUGLAS FIR, UON. GRADE SHALL BE AS FOLLOWS:

JOIST AND RAFTERS: NO. 1
POST, BEAMS, HEADERS: NO. 1
STUDS, PLATES, BLOCKS
LIGHT FRAMING AND MISC: NO. 2

WD-2) ALL LUMBER IN CONTACT WITH CONCRETE OR MASONRY 6'-0" OR LESS ABOVE GROUND SHALL BE PRESSURE TREATED.

WD-3) LUMBER MOISTURE CONTENT: MAINTAIN UNIFORM MOISTURE CONTENT OF LUMBER AT NOT MORE THAN 19-PERCENT DURING AND AFTER INSTALLATION. NEW LUMBER ADJACENT AND CONNECTED TO EXISTING LUMBER SHALL HAVE A MOISTURE CONTENT OF NOT MORE THAN 15-PERCENT AT TIME OF INSTALLATION.

WD-4) REJECTION OF WOOD MEMBERS: THE PROVISION IN DOC PS 20 (AS REFERENCED BY CBC 2303.1.1) WHICH PERMITS 5 PERCENT OF THE MATERIAL TO FALL BELOW GRADE SHALL NOT BE CONSTRUED TO PERMIT BELOW-GRADE MATERIAL TO BE USED AS LOAD-CARRYING MEMBERS WHICH HAVE BEEN DESIGNED FOR SPECIFIED ALLOWABLE STRESSES AND ACCEPTABLE SAFETY FACTORS. MATERIALS WHICH FALL BELOW GRADE SHALL BE REJECTED FOR LOAD-CARRYING USE. WOOD MEMBERS WHICH ARE REQUIRED TO CARRY DESIGN LOADS AND WHICH THE PROJECT ARCHITECT, ENGINEER OR INSPECTOR JUDGE TO BE MISGRADED SHALL BE REINSPECTED BY A QUALIFIED LUMBER GRADING INSPECTOR TO VERIFY THE PROPER GRADING OF THE MATERIAL. WOOD MEMBERS WHICH HAVE PERMISSIBLE GRADE CHARACTERISTICS OR DEFECTS IN SUCH COMBINATION AS TO AFFECT THE SERVICEABILITY OF THE MEMBER SHALL BE REJECTED BY THE PROJECT INSPECTOR WITH THE CONCURRENCE OF THE ARCHITECT OR STRUCTURAL ENGINEER.

WD-5) STRUCTURAL SHEATHING:

A. ROOF SHEATHING: 19/32" APA RATED STRUCTURAL 1 SHEATHING 32/16", EXPOSURE 1, PS1(LATEST EDITION, 5 PLY PLYWOOD
B. FLOOR SHEATHING: 23/32" APA RATED, STRUCTURAL 1 SHEATHING, EXPOSURE 1, PS1 (LATEST EDITION)
C. WALL SHEATHING: 15/32" APA RATED STRUCTURAL 1SHEATHING, EXPOSURE 1, PS1 (LATEST EDITION), 4 PLY PLYWOOD.
D. FIRE TREATED WALL SHEATHING: 19/32 APA RATED STRUCTURAL I SHEATHING EXPOSURE 1, PS1 (LATEST EDITION), 5 PLY PLYWOOD.

WD-6) PREFABRICATED WOOD I-JOIST: AS MANUFACTURED BY WEYERHAEUSER (ICC-ES EVALUATION REPORT ESR-1153) OR APPROVED EQUAL.

WD-7) MICROLAM LAMINATED VENEER LUMBER (LVL): AS MANUFACTURED BY WEYERHAEUSER, ICC-ES EVALUATION REPORT ESR-1387 OR APPROVED EQUAL.

WD-8) PARALLAM PARALLEL STRAND LUMBER (PSL): AS MANUFACTURED BY WEYERHAEUSER, ICC-ES EVALUATION REPORT ESR-1387, OR APPROVED EQUAL.

WD-9) TIMBERSTRAND LAMINATED STRAND LUMBER (LSL): AS MANUFACTURED BY WEYERHAEUSER, ICC-ES EVALUATION REPORT ESR-1387, OR APPROVED EQUAL.

WD-10) XL-3 STUDS: AS MANUFACTURED BY STANDARD STRUCTURES, SANTA ROSA, CALIFORNIA, ICC-ES REPORT ER-4901.

WD-11) GLUED-LAMINATED BEAMS:

A. 24FV4 FOR SIMPLE SPANS AND 24FV8 FOR CANTILEVERED AND CONTINUOUS BEAMS.
B. APPEARANCE: INDUSTRIAL GRADE TYP.; ARCHITECTURAL GRADE IF EXPOSED.
C. CAMBER TO RADIUS OF 3500' UON
D. GLULAM BEAMS SHALL BE CONTINUOUSLY INSPECTED PER 1704A6.2.1 BY A GLUE FABRICATION INSPECTOR APPROVED BY DSA. ALL GLULAM BEAMS SHALL BE STAMPED WITH AN IDENTIFICATION MARK.

WD-12) PREFABRICATED WOOD TRUSSES: TRUSS DESIGN AND SPECS BY SUPPLIER

WD-13) FRAMING HARDWARE: AS MANUFACTURED BY SIMPSON CO. OR APPROVED EQUAL. SIMPSON DESIGNATIONS USED.

WD-14) NAILS: COMMON WIRE GAGE UON. NAILING TO CONFORM TO CBC TABLE 2304.9.1, UON.

USE OF MACHINE NAILING IS SUBJECT TO A SATISFACTORY JOBSITE DEMONSTRATION FOR EACH PROJECT AND THE APPROVAL OF THE PROJECT ARCHITECT OR STRUCTURAL ENGINEER AND. THE APPROVAL IS SUBJECT TO CONTINUED SATISFACTORY PERFORMANCE. IF THE NAIL HEADS PENETRATE THE OUTER PLY MORE THAN WOULD BE NORMAL FOR A HAND-HELD HAMMER, OR IF MINIMUM ALLOWABLE EDGE DISTANCES ARE NOT MAINTAINED, THE PERFORMANCE WILL BE DEEMED UNSATISFACTORY AND MACHINE NAILING SHALL BE DISCONTINUED.

WD-15) BOLTS: ASTM A307. ANCHOR RODS = ASTM F1554, FY = 36 KSI.

WD-16) PROVIDE LATERAL SUPPORT FOR BEAMS, JOISTS AND RAFTERS PER CBC 2308.8.5.

WD-17) GLUE FLOOR SHEATHING AT T&G JOINTS AND TO SUPPORTING MEMBERS.

WD-18) NAILS, BOLTS AND SCREWS FOR PRESSURE PRESERVATIVE TREATED AND FIRE RETARDANT TREATED WOOD SHALL BE HOT-DIPPED ZINC COATED GALVANIZED.

WD-19) ROUGH HARDWARE: ALL EXTERIOR HARDWARE SHALL BE HOT-DIPPED GALVANIZED.

WD-20) BOLT HOLES TO BE 1/16-INCH OVERSIZE. THREADS SHALL NOT BEAR ON WOOD. USE STANDARD MALLEABLE IRON WASHERS AGAINST WOOD.

WD-21) NAIL HEADS SHALL BE DRIVEN FLUSH WITH PLYWOOD SURFACE. OVERDRIVEN NAILS (NAILS WHICH FRACTURE THE OUTER PLY LAYER) SHALL BE REPLACED ONE FOR ONE.

WD-22) SHOP DRAWINGS - SUBMIT SHOP DRAWINGS OF ALL MANUFACTURED LUMBER. SHOP DRAWINGS SHALL INCLUDE PLAN LAYOUT OF MEMBERS AND BRIDGING, DETAILS OF MEMBER CONNECTIONS, STIFFENERS, BLOCKING, WEB OPENINGS, AND ALL INFORMATION NECESSARY FOR FABRICATION AND INSTALLATION.

WD-23) ALL WOOD MEMEBERS WHICH REQUIRE 2 HOUR FIRE PROTECTION SHALL BE FIRE TREATED. FIRE TREATED WOOD AND PLYWOOD SHALL BE TREATED WITH PYROGUARD FIRE TREATED WOOD (ICC ESR 1791, LARR 25150) OR EQUIVALENT. ALL FASTENERS IN AFRTW SHALL BE IN CONFORMANCE TO THE ICC REORT OF THE FIRE TREATMENT.

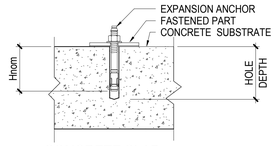

CONCRETE SLAB

PA POST-INSTALLED ANCHORS

PA-1) POST-INSTALLED ANCHORS INCLUDE EXPANSION ANCHORS, SCREW ANCHORS, EPOXY ANCHORS/DOWELS, AND POWDER-ACTUATED FASTENERS.

PA-2) INSTALL POST-INSTALLED ANCHORS IN ACCORDANCE WITH THE APPLICABLE ICC-ES REPORT AND THE MANUFACTURER'S RECOMMENDATIONS.

PA-3) USE SCANNING EQUIPMENT OR OTHER MEANS TO LOCATE AND AVOID CUTTING OR DAMAGING REINFORCING BARS. SER APPROVAL IS REQUIRED PRIOR TO CUTTING OR DAMAGING REINFORCING.

PA-4) SPECIAL INSPECTION IS REQUIRED FOR ALL POST-INSTALLED ANCHOR INSTALLATIONS, UON.

PA-5) FIELD TESTING OF POST-INSTALLED ANCHORS IS REQUIRED, UON. TEST INSTALLED ANCHORS IN ACCORDANCE WITH THE FOLLOWING:

A. TEST 100% OF ANCHORS AT ALL STRUCTURAL APPLICATIONS, UON.
B. TEST 50% OF ANCHORS AT ALL NON-STRUCTURAL APPLICATIONS (SUCH AS EQUIPMENT ANCHORAGE), UON.
C. TEST 10% OF ANCHORS AT SILL PLATE BOLTING APPLICATIONS, UON.
D. IF ANY ANCHOR FAILS TESTING, TEST ALL ANCHORS OF THE SAME TYPE NOT PREVIOUSLY TESTED UNTIL 20 CONSECUTIVE ANCHORS PASS.
E. FIELD TESTS SHALL BE EITHER TENSION TESTS OR TORQUE TESTS, AS REQUIRED FOR THE SPECIFIC ANCHOR TYPE.
F. TENSION TESTS: APPLY TEST LOADS TO ANCHORS WITHOUT REMOVING THE NUT IF POSSIBLE. IF NOT, REMOVE NUT AND INSTALL A THREADED COUPLER TO THE SAME TIGHTNESS AS THE ORIGINAL NUT USING A TORQUE WRENCH. REACTION LOADS FROM TEST FIXTURES MAY BE APPLIED CLOSE TO THE ANCHOR BEING TESTED, PROVIDED THE ANCHOR IS NOT RESTRAINED FROM WITHDRAWING BY THE FIXTURES. TO BE ACCEPTABLE, ANCHORS SHALL HAVE NO OBSERVABLE MOVEMENT AT THE APPLICABLE TEST LOAD (OBSERVABLE MOVEMENT IS DEFINED AS THE WASHER UNDER THE NUT BECOMING LOOSE).
G. TORQUE TESTS: TO BE ACCEPTABLE, THE APPLICABLE TEST TORQUE MUST BE REACHED WITHIN ONE-HALF TURN OF THE NUT.
H. TEST EQUIPMENT IS TO BE CALIBRATED BY AN APPROVED TESTING LABORATORY IN ACCORDANCE WITH STANDARD RECOGNIZED PROCEDURES.
I. FIELD TESTING SHALL BE DONE IN THE PRESENCE OF THE PROJECT INSPECTOR.
J. TESTING SHOULD OCCUR A MINIMUM OF 24 HOURS AFTER INSTALLATION OF THE SUBJECT ANCHOR.

PA-6) EXPANSION ANCHORS

A. EXPANSION ANCHORS SHALL BE EITHER ONE OF THE FOLLOWING, UON:

HILTI KWIK BOLT TZ
(ICC-ES REPORT ESR-1917)

SIMPSON STRONG-BOLT 2
(ICC-ES REPORT ESR-3037)

USE OF CARBON STEEL EXPANSION ANCHORS IS LIMITED TO DRY, INTERIOR LOCATIONS. USE STAINLESS STEEL EXPANSION ANCHORS AT EXTERIOR, WEATHER-EXPOSED, OR DAMP LOCATIONS.

B. ANCHOR EMBEDMENTS BELOW ARE TO BE USED WHEN EXPLICITLY SPECIFIED IN THE STRUCTURAL DRAWINGS. FOR LOCATIONS WHERE TENSION TEST VALUES ARE NOT SPECIFIED IN THE DRAWINGS, CONSULT WITH THE SER.

HILTI KWIK BOLT TZ IN NORMAL-WEIGHT CONCRETE			
ANCHOR DIAMETER	Hnom	MINIMUM HOLE DEPTH	TORQUE TEST VALUE (FT-LBS)
3/8"	2 5/16"	2 5/8"	25
1/2"	2 3/8"	2 5/8"	40
5/8"	4 7/16"	4 3/4"	60
3/4"	5 9/16"	5 3/4"	110

HILTI KWIK BOLT TZ IN LIGHTWEIGHT CONCRETE			
ANCHOR DIAMETER	Hnom	MINIMUM HOLE DEPTH	TORQUE TEST VALUE (FT-LBS)
3/8"	2 5/16"	2 5/8"	25
1/2"	2 3/8"	2 5/8"	40
5/8"	3 9/16"	3 7/8"	60
3/4"	4 5/16"	4 1/2"	110

SIMPSON STRONG-BOLT 2 IN NORMAL-WEIGHT CONCRETE			
ANCHOR DIAMETER	Hnom	MINIMUM HOLE DEPTH	TORQUE TEST VALUE (FT-LBS)
3/8"	1 7/8"	2"	30
1/2"	2 3/4"	3"	60
5/8"	5 1/8"	5 3/8"	90
3/4"	5 3/4"	6"	150

SIMPSON STRONG-BOLT 2 IN LIGHTWEIGHT CONCRETE			
ANCHOR DIAMETER	Hnom	MINIMUM HOLE DEPTH	TORQUE TEST VALUE (FT-LBS)
3/8"	1 7/8"	2"	30
1/2"	2 3/4"	3"	60
5/8"	3 3/8"	3 5/8"	90
3/4"	4 1/8"	4 3/8"	150

C. Hnom IS MEASURED FROM FACE OF CONCRETE SUBSTRATE TO THE END OF THE BOLT.
D. CONTRACTOR SHALL PROVIDE ANCHORS WITH SUFFICIENT TOTAL LENGTH FOR THE SPECIFIED EMBEDMENT LENGTH, THICKNESS OF FASTENED PART, WASHER AND NUT.

PA-7) EXPANSION ANCHORS IN MASONRY

A. EXPANSION ANCHORS SHALL BE EITHER ONE OF THE FOLLOWING, UON:

HILTI KWIK BOLT 3
(ICC-ES REPORT ESR-1385)

SIMPSON WEDGE-ALL
(ICC-ES REPORT ESR-1396)

USE OF ZINC-PLATED CARBON STEEL EXPANSION ANCHORS IS LIMITED TO DRY, INTERIOR LOCATIONS. USE MECHANICALLY GALVANIZED EXPANSION ANCHORS AT EXTERIOR, WEATHER-EXPOSED, OR DAMP LOCATIONS.

B. ANCHOR EMBEDMENTS BELOW ARE TO BE USED WHEN EXPLICITLY SPECIFIED IN THE STRUCTURAL DRAWINGS. FOR LOCATIONS WHERE TENSION TEST VALUES ARE NOT SPECIFIED IN THE DRAWINGS, CONSULT WITH THE SER.

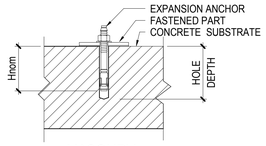

MASONRY

HILTI KWIK BOLT 3 IN MASONRY			
DIAMETER	Hnom	MINIMUM HOLE DEPTH	TORQUE TEST VALUE (FT-LBS)
1/4"	2"	2 1/4"	4
3/8"	2 1/2"	2 7/8"	15
1/2"	3 1/2"	4"	25
5/8"	4"	4 5/8"	65
3/4"	4 3/4"	5 1/2"	120

SIMPSON WEDGE-ALL IN MASONRY			
ANCHOR DIAMETER	Hnom	MINIMUM HOLE DEPTH	TORQUE TEST VALUE (FT-LBS)
3/8"	2 5/8"	3 1/8"	30
1/2"	3 1/2"	4"	35
5/8"	4 3/8"	5 1/8"	55
3/4"	5 1/4"	6"	120

C. Hnom IS MEASURED FROM FACE OF CONCRETE SUBSTRATE TO THE END OF THE BOLT.
D. CONTRACTOR SHALL PROVIDE ANCHORS WITH SUFFICIENT TOTAL LENGTH FOR THE SPECIFIED EMBEDMENT LENGTH, THICKNESS OF FASTENED PART, WASHER AND NUT.
E. THE DEPTH OF THE DRILLED HOLES MUST EXCEED THE SPECIFIED ANCHOR EMBEDMENT LENGTH BY A SUFFICIENT AMOUNT TO PERMIT THE ANCHORS TO BE INSTALLED TO A MINIMUM OF SIX THREADS BELOW THE SUBSTRATE SURFACE

PA-8) SCREW ANCHORS

A. SCREW ANCHORS SHALL BE EITHER ONE OF THE FOLLOWING, UON:

SIMPSON TITEN HD
(ICC-ES REPORT ESR-2713)

HILTI KWIK HUS-EZ
(ICC-ES REPORT ESR-3027)

B. ANCHOR EMBEDMENTS AND TENSION TEST VALUES BELOW ARE TO BE USED WHEN EXPLICITLY SPECIFIED IN THE STRUCTURAL DRAWINGS. FOR LOCATIONS WHERE TENSION TEST VALUES ARE NOT SPECIFIED IN THE DRAWINGS, CONSULT WITH THE SER.

SIMPSON TITEN HD IN NORMAL WEIGHT CONCRETE (3000 PSI MIN)			
ANCHOR DIAMETER	Hnom	MINIMUM HOLE DEPTH	TENSION TEST VALUE (LBS)
3/8"	2 1/2"	3"	1100
1/2"	3 1/4"	3 3/4"	2730
5/8"	4 1/2"	4 1/2"	3460
3/4"	5 1/2"	6"	5410

HILTI KWIK HUS-EZ IN NORMAL WEIGHT CONCRETE (3000 PSI MIN)			
ANCHOR DIAMETER	Hnom	MINIMUM HOLE DEPTH	TENSION TEST VALUE (LBS)
1/4"	2 1/2"	2 7/8"	1040
3/8"	2 1/2"	2 3/4"	1920
1/2"	3"	3 3/8"	2405
5/8"	3 1/4"	3 5/8"	2800
3/4"	4"	4 3/8"	3780

PA-9) EPOXY ANCHORS AND DOWELS

A. EPOXY SHALL BE EITHER ONE OF THE FOLLOWING, UON:

HILTI HIT-HY 200 (ICC-ES REPORT ESR-3187)

HILTI HIT-RE 500-SD (ICC-ES REPORT ESR-2322)

SIMPSON SET-XP (ICC-ES REPORT ESR-2508)

B. RODS EMBEDDED IN EPOXY SHALL BE CARBON STEEL THREADED RODS PER THE EPOXY MANUFACTURER'S ICC-ES REPORT. FOR HILTI HIT-HY 200 EPOXY, HILTI HIT-Z ANCHOR RODS MAY BE SUBSTITUTED FOR THREADED RODS AT CONTRACTOR'S OPTION.

C. REINFORCING STEEL BARS EMBEDDED IN EPOXY SHALL BE ASTM A615, GRADE 60, UON.

D. ANCHOR EMBEDMENT AND TENSION TEST VALUES BELOW ARE TO BE USED WHEN EXPLICITLY SPECIFIED IN THE STRUCTURAL DRAWINGS. FOR LOCATIONS WHERE TENSION TEST VALUES ARE NOT SPECIFIED IN THE DRAWINGS, CONSULT WITH THE SER.

EPOXY ANCHORS IN NORMAL-WEIGHT CONCRETE (3000 PSI MIN)				
		TENSION TEST VALUE (LBS)		
REBAR SIZE	EMBEDMENT (IN)	HILTI HIT-HY 200	HILTI HIT-RE 500-SD	SIMPSON SET-XP
#3	3	2900	940	1040
#4	4	5180	1670	3740
#5	5	8130	2600	5260
#6	6	11120	3750	6740
#7	7	12260	4320	8020
* LISTED EPOXY ADHESIVE MAY NOT BE USED WITH NOTED REBAR SIZES				

EPOXY ANCHORS IN NORMAL-WEIGHT CONCRETE (3000 PSI MIN)				
		TENSION TEST VALUE (LBS)		
THREADED ROD DIAMETER (IN)	EMBEDMENT (IN)	HILTI HIT-HY 200	HILTI HIT-RE 500-SD	SIMPSON SET-XP
3/8	3	2500	1230	1700
1/2	4	4480	2110	2600
5/8	5	7030	3170	3450
3/4	6	10180	4450	4440
7/8	7	11710	4720	5540

E. TESTING OF EPOXY DOWELS AT JOINTS BETWEEN NEW AND EXISTING SLABS-ON-GRADE IS NOT REQUIRED.
F. TESTING OF #3 EPOXY DOWELS AT CURBS IS NOT REQUIRED.
G. TESTING SHALL OCCUR AFTER EPOXY HAS CURED, AS PER MANUFACTURER'S RECOMMENDATIONS.
H. OVERHEAD AND/OR CONSTANT TENSION EPOXY ANCHOR INSTALLATIONS NOT SHOWN ON THE DRAWINGS SHALL NOT BE PERMITTED UNLESS EACH CONDITION IS REVIEWED AND APPROVED IN WRITTING BY SER.
I. EPOXY ANCHORS SHALL BE INSTALLED IN CONCRETE HAVING A MINIMUM AGE OF 21 DAYS AT TIME OF ANCHOR INSTALLATION.
J. INSTALLATION AND INSPECTION OF EPOXY ANCHORS SHALL COMPLY WITH ACI 318-11 APPENDIX D SECTIONS D.9.2.2 AND D.9.2.4.
K. FOR USES OF EPOXY DOWELS NOT EXPLICITLY SPECIFIED IN THE STRUCTURAL DRAWINGS, CONTACT THE SER.

PA-10) POWDER-ACTUATED FASTENERS (PAF):

A. POWDER-ACTUATED FASTENERS SHALL BE EITHER ONE OF THE FOLLOWING, UON:
HILTI X-U (ICC-ES REPORT ESR-2269, LARR 25675, LARR 25708) AT METAL.
HILTI X-CP72 (ICC-ES REPORT ESR-2379) AT PTDF.
SIMPSON POWER-DRIVEN FASTENERS (ICC-ES REPORT ESR-2138), LARR 25469
B. PROVIDE 0.08" THICK x 1.1" SQUARE OR 1.425" ROUND WASHERS FOR ALL POWDER-ACTUATED FASTENERS.
C. THE MINIMUM EMBEDMENT OF POWDER-ACTUATED FASTENERS INTO CONCRETE SHALL BE 1", UON.
D. THE EMBEDMENT OF POWDER-ACTUATED FASTENERS INTO STEEL SHALL BE THAT REQUIRED BY THE PAF MANUFACTURER, UON.
E. TESTING OF POWDER-ACTUATED FASTENERS IS NOT REQUIRED.

SU SUBMITTALS

SU-1) TWENTY WORKING DAYS PRIOR TO SUBMITTING SHOP DRAWINGS, THE CONTRACTOR SHALL SUBMIT FOR STRUCTURAL ENGINEER' S REVIEW A SCHEDULE WHICH DETAILS THE ESTIMATED QUANTITY OF SHOP DRAWINGS AND THE DATE THE SHOP DRAWINGS WILL BE RECEIVED BY THE STRUCTURAL ENGINEER. THE STRUCTURAL ENGINEER SHALL HAVE THE OPPORTUNITY TO REVIEW THE PROPOSED SCHEDULE AND SUBMIT COMMENTS TO THE CONTRACTOR. THE FINAL SHOP DRAWING SCHEDULE SHALL BE DEVELOPED AND SUBMITTED TO THE STRUCTURAL ENGINEER. IN ACCORDANCE WITH THE SHOP DRAWING SCHEDULE, THE STRUCTURAL ENGINEER WILL RETURN THE SHOP DRAWING ITEMS WITHIN TEN WORKING DAYS AFTER HAVING RECEIVED THE REPRODUCIBLE SHOP DRAWING.

SU-2) THE CONTRACTOR IS TO REVIEW EACH SUBMITTAL PRIOR TO FORWARDING TO ARCHITECT AND STRUCTURAL ENGINEER. THE CONTRACTOR IS TO STAMP EACH SUBMITTAL VERIFYING THAT THE FOLLOWING IS ADDRESSED:

1. THE SHOP DRAWING IS REQUESTED.
2. THE SHOP DRAWING IS BASED ON THE LATEST DESIGN.
3. THE ARCHITECT' S AND STRUCTURAL ENGINEER' S COMMENTS FROM ANY PREVIOUS SUBMITTALS ARE ADDRESSED.
4. THE WORK IS COORDINATED AMONG ALL CONSTRUCTION TRADES.
5. REVISIONS FROM PREVIOUS SUBMITTALS ARE CLEARLY MARKED BY CIRCLING OR CLOUDS.
6. SUBMITTAL IS COMPLETE.
7. SUBMITTAL DOES NOT INCLUDE SUBSTITUTION REQUEST
8. SUBMITTAL SHALL INCLUDE A STAMP INDICATING PROJECT NAME AND LOCATION, SUBMITTAL NUMBER, SPECIFICATION SECTION NUMBER.

THE STRUCTURAL ENGINEER SHALL RETURN, WITHOUT COMMENT, SUBMITTALS WHICH THE CONTRACTOR HAS NOT STAMPED OR WHICH DO NOT MEET THE ABOVE REQUIREMENTS. THE STRUCTURAL ENGINEER' S REVIEW OF SUBMITTALS SHALL BE FOR GENERAL CONFORMANCE WITH THE DESIGN INTENT. NO WORK SHALL BE STARTED WITHOUT SUCH REVIEW.

SU-3) FOR COMPONENTS THAT REQUIRE ENGINEERING BY THE CONTRACTOR, PROVIDE A NOTE ON EACH SHOP DRAWING, WRITTEN AND SIGNED BY THE SUPPLIER' S ENGINEER, INDICATING THAT THE SHOP DRAWING IS IN CONFORMANCE WITH THE CALCULATIONS OF THE CONTRACTOR' S ENGINEER.

SU-4) THE FOLLOWING ITEMS REQUIRE SUBMITTALS FOR STRUCTURAL REVIEW AS OUTLINED IN THE SPECIFICATIONS:

[03 10 00	S	CALC	CONCRETE FORMWORK
03 20 00	S		CONCRETE REINFORCING LAYOUT
03 30 00	S		CONCRETE MIX DESIGNS
03 30 00	S		CONCRETE CONSTRUCTION JOINT LAYOUT
04 10 00	S		MASONRY REINFORCEMENT LAYOUT
04 10 00	S		GROUT MIX DESIGNS
05 12 00	S		STRUCTURAL STEEL
05 31 00	S		STEEL DECK

S = SHOP DRAWINGS AND/OR PRODUCT DATA REQUIRED

CALC = SUPPORTING CALCULATIONS REQUIRED, SIGNED AND SEALED BY A LICENSED [PROFESSIONAL, STRUCTURAL] ENGINEER IN THE STATE IN WHICH THE PROJECT IS LOCATED.

THE ITEMS IN THIS SECTION REQUIRE SHOP DRAWINGS, SUBMITTED FOR REVIEW OF INTERACTION WITH THE BASE BUILDING STRUCTURE.
SU-5) THE FOLLOWING SHOP DRAWINGS SHALL SHOW THE MAGNITUDES, DIRECTIONS, LOCATIONS AND CONNECTION CONDITIONS OF ALL LOADS IMPOSED ON THE ARCHITECTURAL ORNAMENTATION (FLAGPOLES, BANNERS,MASTS, ETC.)
ELEVATOR REACTIONS
ESCALATOR REACTIONS
SKYLIGHTS
WINDOW WASHING DAVIT SYSTEMS

IN ADDITION TO THE SHOP DRAWING REQUIREMENTS ABOVE, THE FOLLOWING SUBMITTALS SHALL ALSO LIST THE DESIGN LOADS USED AND BE SIGNED AND SEALED BY A LICENSED [PROFESSIONAL, STRUCTURAL] ENGINEER IN THE STATE IN WHICH THE PROJECT IS LOCATED:

ARCHITECTURAL PRECAST CONCRETE AND CONNECTIONS
COLD-FORMED METAL FRAMING
EXTERIOR CLADDING SYSTEMS
METAL STAIRS

SU-6) DEFERRED SUBMITTALS SHALL FIRST BE SUBMITTED TO THE PROJECT ARCHITECT AND/OR THE ENGINEER OF RECORD FOR REVIEW AND COORDINATION. FOLLOWING THE COMPLETION OF THE ARCHITECT'S OR ENGINEER'S REVIEW, A SUBMITTAL TO THE PLAN CHECK AUTHORITY SHALL BE MADE FOR REVIEW AND APPROVAL. THIS SUBMITTAL SHALL BE PROCESSED IN ACCORDANCE WITH CBC APPENDIX CHAPTER 1, SECTION 106.3.4.2. FOR A LIST OF DEFERRED ITEMS, SEE ARCHITECTURAL DRAWINGS.

PI PERFORMANCE ITEMS

PI-1) THE CONTRACTOR SHALL EMPLOY OR RETAIN A LICENSED STRUCTURAL ENGINEER IN THE STATE IN WHICH THIS PROJECT IS LOCATED TO DESIGN AND DETAIL PERFORMANCE ITEMS AS PART OF THE BASE BUILDING STRUCTURE INDICATED IN THE CONTRACT DOCUMENTS INCLUDING BUT NOT LIMITED TO:

[AUGERCAST PILES
POST-TENSIONING TENDON LAYOUT AND EFFECTIVE FORCE,
FRICTION LOSS CALCULATIONS
STRUCTURAL PRECAST CONCRETE AND CONNECTIONS
STEEL JOISTS, BRIDGING AND CONNECTIONS]

DE DEMOLITION

DE-1) THE CONTRACTOR IS FULLY RESPONSIBLE FOR THE MEANS AND METHODS OF
DEMOLITION AND THE INTEGRITY AND STABILITY OF THE EXISTING STRUCTURE DURING DEMOLITION UNTIL THE WORK IS COMPLETED. THE CONTRACTOR SHALL PROVIDE SHORING IN REQUIRED LOCATIONS WHERE EXISTING CONSTRUCTION TO
REMAIN WILL BE AFFECTED BY DEMOLITION.

DE-2) THE CONTRACTOR IS RESPONSIBLE FOR REPAIRS TO ANY STRUCTURAL ELEMENTS WHICH ARE TO REMAIN AND THAT HAVE BEEN DAMAGED DURING THE DEMOLITION PROCESS TO THE COMPLETE SATISFACTION OF THE OWNER. THE REPAIRS SHALL BE AT NO EXPENSE TO THE OWNER. ALL REPAIR WORK SHALL BE DESIGNED BY A LICENSED STRUCTURAL ENGINEER IN THE STATE OF [STATE] AND SUBMITTED TO THE STRUCTURAL ENGINEER OF RECORD FOR REVIEW AND APPROVAL PRIOR TO COMMENCING REPAIR WORK.

DE-3) ALL EXISTING FRAMING IS INDICATED FOR REFERENCE ONLY AND IS TO BE FIELD VERIFIED BY THE CONTRACTOR. VERIFY THE EXACT EXTENT OF DEMOLITION AT THE SITE. DETERMINE THE NATURE AND EXTENT OF DEMOLITION THAT WILL BE NECESSARY BY COMPARING THE CONTRACT DOCUMENTS WITH THE EXISTING CONSTRUCTION.

DE-4) THE CONTRACTOR SHALL USE THE STRUCTURAL CONTRACT DOCUMENTS IN CONJUNCTION WITH THE ARCHITECTURAL AND MEP DEMOLITION CONTRACT DOCUMENTS. IN THE EVENT OF CONFLICTS, THE CONTRACTOR SHALL IMMEDIATELY NOTIFY THE ARCHITECT AND STRUCTURAL ENGINEER.

DE-5) THE CONTRACTOR SHALL USE QUALIFIED, EXPERIENCED PERSONNEL FOR DEMOLITION AND REMOVAL OPERATIONS. PERFORM DEMOLITION AND REMOVAL OPERATIONS IN A CAREFUL AND ORDERLY MANNER TO PREVENT HAZARDS TO PERSONS, DAMAGE TO PROPERTY, AND THE SPREADING OF DUST AND DEBRIS.

DE-6) DO NOT PERMIT PORTIONS OF THE STRUCTURE TO FALL NOR DEBRIS TO DROP EXCEPT BY METHODS WHICH WILL INSURE INTEGRITY OF THE STRUCTURE.

DE-7) PRIOR TO THE START OF WORK, VERIFY THAT THE SCOPE OF DEMOLITION INDICATED ON THE CONTRACT DOCUMENTS SHALL NOT DAMAGE, CUT OR DISRUPT SERVICE OF ANY MECHANICAL SYSTEM, ELECTRICAL SYSTEM OR UTILITY EMBEDDED IN THE EXISTING STRUCTURE.

DE-8) DO NOT REMOVE MORE OF THE EXISTING STRUCTURE THAN INDICATED ON CONTRACT DOCUMENTS. DO NOT DAMAGE, MAR, CUT OR DEFACE THE REMAINING STRUCTURE OR MATERIALS TO BE REUSED.

DE-9) THE CONTRACTOR SHALL INCLUDE IN HIS BID THE COST OF REMOVING DEMOLISHED MATERIALS FROM THE SITE IN ACCORDANCE WITH ALL APPLICABLE LAWS, CODES AND, AND REGULATIONS.

DE-10) WHERE NEW OPENINGS IN EXISTING CONCRETE SLABS OR WALLS ARE TO BE CREATED, THE DEMOLITION CONTRACTOR SHALL CORE HOLES AT THE OUTSIDE CORNERS OF THE NEW OPENING PRIOR TO DEMOLITION. SAW-CUT AND DEMOLISH SLAB OR WALL ONLY AFTER THE INSTALLATION OF ALL REQUIRED NEW STRUCTURAL FRAMING AND/OR REINFORCEMENT IN PLAN OR SECTION, UON. SAW CUTTING SHALL BE STRAIGHT AND SHALL NOT EXTEND INTO EXISTING SLAB OR WALL TO REMAIN NOR BEYOND THE HOLES CORED AT THE CORNERS OF THE NEW OPENING.

LA CITY OF LANCASTER REQUIREMENTS

LA-1) CONTRACTORS RESPONSIBLE FOR THE CONSTRUCION OF A WIND AND/OR SEISMIC FORCE RESISTING SYSTEM / COMPONENT LISTED IN THE "STATEMENT OF SPECIAL INSPECTION" SHALL SUBMIT A WRITTEN STATEMENT OF RESPONSIBILITY TO THE LADBS INSPECTORS AND THE OWNER PRIOR TO THE COMMENCEMENT OF WORK ON SUCH SYSTEMS OR COMPONENT PER SEC 1709.1

LA-2) CONTINUOUS SPECIAL INSPECTION BY A REGISTERED DEPUTY INSPECTOR IS REQUIRED FOR FIELD WELDING, CONCRETE STRENGTH F'C > 2500 PSI, HIGH STRENGTH BOLTING, SPRAYED-ON FIREPROOFING, ENGINEERED MASONRY, HIGH-LIFT GROUTING, PRE-STRESSED CONCR

SI SPECIAL INSPECTIONS AND STRUCTURAL TESTING

SI-1) SPECIAL INSPECTIONS SHALL BE PERFORMED BY A SPECIAL INSPECTOR PER CBC SECTIONS 1704 AND 1705. THE SPECIAL INSPECTOR SHALL BE EMPLOYED BY THE OWNER AND NOT BY THE CONTRACTOR OR ANY OTHER PERSON RESPONSIBLE FOR THE WORK.

SI-2) THE SPECIAL INSPECTOR SHALL BE A QUALIFIED (LICENSED) PERSON WHO SHALL PROVIDE WRITTEN DOCUMENTATION TO THE BUILDING OFFICIAL DEMONSTRATING HIS OR HER COMPETENCE AND RELEVANT TRAINING OR EXPERIENCE TO THE SATISFACTION OF THE BUILDING OFFICIAL. EXPERIENCE SHALL BE FOR SPECIAL INSPECTION OF THE PARTICULAR TYPE OF CONSTRUCTION OR OPERATION REQUIRING SPECIAL INSPECTION.

SI-3) THE CONTRACTOR SHALL SUBMIT A WRITTEN STATEMENT OF RESPONSIBILITY PER CBC SECTION 1704.4 TO THE BUILDING OFFICIAL AND THE OWNER PRIOR TO THE COMMENCEMENT OF WORK WHEN RESPONSIBLE FOR THE CONSTRUCTION OF A MAIN WIND FORCE OR SEISMIC FORCE RESISTING SYSTEM. THE STATEMENT OF RESPONSIBILITY SHALL CONTAIN ACKNOWLEDGEMENT OF AWARENESS OF THE SPECIAL REQUIREMENTS CONTAINED IN THE STATEMENT OF SPECIAL INSPECTION.

SI-4) THE FOLLOWING WORK REQUIRES STRUCTURAL TESTS. FOR SPECIFIC REQUIREMENTS OF STRUCTURAL TESTS, SEE THE SPECIFICATIONS AND GENERAL NOTES.

1. CONCRETE REINFORCEMENT
2. CAST-IN-PLACE CONCRETE
3. SHOTCRETE
4. POST-INSTALLED ANCHORS
5 GROUTED DOWELS
6. CONCRETE UNIT MASONRY
7. STRUCTURAL STEEL MATERIALS AND FABRICATION
8 WELDING: STRUCTURAL STEEL AND REINFORCING STEEL
9. STEEL DECKING
10 COLD FORMED METAL FRAMING

SI-5) THE FOLLOWING ITEMS SHALL RECEIVE SPECIAL INSPECTION BY A CERTIFIED SPECIAL INSPECTOR IN ACCORDANCE WITH CBC 1704 AND 1705.

REQUIRED VERIFICATION AND INSPECTION OF CONCRETE CONSTRUCTION

VERIFICATION AND INSPECTION	CONTINUOUS	PERIODIC	REFERENCED STANDARD	CBC REFERENCE
1. INSPECTION OF REINFORCING STEEL, INCLUDING PRESTRESSING TENDONS, AND PLACEMENT.	—	X	ACI 318: 3.5, 7.1-7.7	1910.4
2. INSPECTION OF REINFORCING STEEL WELDING IN ACCORDANCE WITH TABLE 1705.2.2, ITEM 2B.	—	—	AWS D1.4, ACI 318: 3.5.2	—
3. INSPECTION OF ANCHORS CAST IN CONCRETE WHERE ALLOWABLE LOADS HAVE BEEN INCREASED OR WHERE STRENGTH DESIGN HAS BEEN USED.	—	X	ACI 318: 8.1.3, 21.2.8	1908.5, 1909.1
4. INSPECTION OF ANCHORS POST-INSTALLED IN HARDENED CONCRETE MEMBERS.	—	X	ACI 318: 3.8.6, 8.1.3, 21.2.8	1909.1
5. VERIFYING USE OF REQUIRED DESIGN MIX.	—	X	ACI 318: Ch. 4, 5.2-5.4	1904.2, 1910.2, 1910.3
6. AT THE TIME FRESH CONCRETE IS SAMPLED TO FABRICATE SPECIMENS FOR STRENGTH TESTS, PERFORM SLUMP AND AIR CONTENT TESTS, AND DETERMINE THE TEMPERATURE OF THE CONCRETE.	X	—	ASTM C 172, ASTM C 31, ACI 318: 5.6, 5.8	1910.10
7. INSPECTION OF CONCRETE AND SHOTCRETE PLACEMENT FOR PROPER APPLICATION TECHNIQUES.	X	—	ACI 318: 5.9, 5.10	1910.6, 1910.7 1910.8
8. INSPECTION FOR MAINTENANCE OF SPECIFIED CURING TEMPERATURE AND TECHNIQUES.	—	X	ACI 318: 5.11-5.13	1910.9
9. INSPECTION OF PRESTRESSED CONCRETE:				
A. APPLICATION OF PRESTRESSING FORCES.	X	—	ACI 318: 18.20 ACI 318: 18.18.4	—
B. GROUTING OF BONDED PRESTRESSING TENDONS IN THE SEISMIC-FORCE-RESISTING SYSTEM.	X	—		
10. ERECTION OF PRECAST CONCRETE MEMBERS.	—	X	ACI 318: CH.16	—
11. VERIFICATION OF IN-SITU CONCRETE STRENGTH, PRIOR TO STRESSING OF TENDONS IN POST-TENSIONED CONCRETE AND PRIOR TO REMOVAL OF SHORES AND FORMS FROM BEAMS AND STRUCTURAL SLABS.	—	X	ACI 318: 6.2	—
12. INSPECT FORMWORK FOR SHAPE, LOCATION AND DIMENSIONS OF THE CONCRETE MEMBER BEING FORMED.	—	X	ACI 318: 6.1.1	—

REQUIRED VERIFICATION AND INSPECTION OF STEEL CONSTRUCTION

VERIFICATION AND INSPECTION	CONTINUOUS	PERIODIC	REFERENCED STANDARD	CBC REFERENCE
1. MATERIAL VERIFICATION OF HIGH-STRENGTH BOLTS, NUTS AND WASHERS:				
A. IDENTIFICATION MARKINGS TO CONFORM TO ASTM STANDARDS SPECIFIED IN THE APPROVED CONSTRUCTION DOCUMENTS.	—	X	AISC 360, SECTION A3.3 AND APPLICABLE ASTM MATERIAL STANDARDS	—
B. MANUFACTURER'S CERTIFICATE OF COMPLIANCE REQUIRED.	—	X	—	—
2. INSPECTION OF HIGH-STRENGTH BOLTING:				
A. SNUG-TIGHT JOINTS	—	X	AISC 360, SECTION M2.5	—
B. SLIP-CRITICAL CONNECTIONS.	X	X		
C. PRETENSIONED AND SLIP-CRITICAL JOINTS USING TURN-OF-NUT WITH MATCHMARKING, TWIST-OFF BOLT OR DIRECT TENSION INDICATOR METHODS OF INSTALLATION.	X	—		
3. MATERIAL VERIFICATION OF STRUCTURAL STEEL AND COLD-FORMED STEEL DECK:				
A. FOR STRUCTURAL STEEL, IDENTIFICATION MARKINGS TO CONFORM TO AISC 360.	—	X	AISC 360, SECTION A3.1H	2203.1
B. FOR OTHER STEEL, IDENTIFICATION MARKINGS TO CONFORM TO ASTM STANDARDS SPECIFIED IN THE APPROVED CONSTRUCTION DOCUMENTS.	—	X	APPLICABLE ASTM MATERIAL STANDARDS	—
C. MANUFACTURER'S CERTIFIED MILL TEST REPORTS.	—	—	ASTM A 6 OR ASTM A 568	
4. MATERIAL VERIFICATION OF WELD FILLER MATERIALS:				
A. IDENTIFICATION MARKINGS TO CONFORM TO AWS SPECIFICATION IN THE APPROVED CONSTRUCTION DOCUMENTS.	—	—	AISC 360, SECTION A3.5 AND APPLICABLE AWS A5 DOCUMENTS	—
B. MANUFACTURER'S CERTIFICATE OF COMPLIANCE REQUIRED.	—	X	—	—
5. INSPECTION OF WELDING:	—	—		
A. STRUCTURAL STEEL AND COLD-FORMED STEEL DECK:	—	—		
1. COMPLETE AND PARTIAL PENETRATION GROOVE WELDS.	X	—	AWS D1.1	1705.2.1
2. MULTIPASS FILLET WELDS.	X	—		
3. SINGLE-PASS FILLET WELDS > 5/16"	X	—		
4. PLUG AND SLOT WELDS.	X	—		
5. SINGLE-PASS FILLET WELDS ≤ 5/16"	—	X		
6. FLOOR AND ROOF DECK WELDS.	—	X	AWS D1.3	—
B. REINFORCING STEEL:	—	—	AWS D1.4, ACI 318: 3.5.2	—
1. VERIFICATION OF WELDABILITY OF REINFORCING STEEL OTHER THAN ASTM A 706.	—	X		
2. REINFORCING STEEL-RESISTING FLEXURAL AND AXIAL FORCES IN INTERMEDIATE AND SPECIAL MOMENT FRAMES, AND BOUNDARY ELEMENTS OF SPECIAL REINFORCED CONCRETE SHEAR WALLS AND SHEAR REINFORCEMENT.	X	—		
3. SHEAR REINFORCEMENT.	X	—		
4. OTHER REINFORCING STEEL.	—	X		
6. INSPECTION OF STEEL FRAME JOINT DETAILS FOR COMPLIANCE WITH APPROVED CONSTRUCTION DOCUMENTS:	—	X	—	1705.2.1
DETAILS SUCH AS BRACING AND STIFFENING.	—	X		
B. MEMBER LOCATIONS.	—	X		
C. APPLICATION OF JOINT DETAILS AT EACH CONNECTION.	—	X		

LEVEL B REQUIRED VERIFICATION AND INSPECTION OF MASONRY CONSTRUCTION

INSPECTION TASK	FREQUENCY[a] CONTINUOUS	FREQUENCY[a] PERIODIC	REFERENCE FOR CRITERIA TMS 402/ACI 530 /ASCE 5	REFERENCE FOR CRITERIA TMS 602/ACI 530.1 /ASCE 6
1. VERIFY COMPLIANCE WITH THE APPROVED SUBMITTALS.	—	X	—	ART. 1.5
2. AS MASONRY CONSTRUCTION BEGINS, THE FOLLOWING ARE IN COMPLIANCE:				
A. PROPORTIONS OF SITE-PREPARED MORTAR	—	X	—	ART. 2.1, 2.6A
B. CONSTRUCTION OF MORTAR JOINTS	—	X	—	ART. 3.3B
C. GRADE AND SIZE OF PRESTRESSING TENDONS AND ANCHORAGES	—	X	—	ART. 2.4B, 2.4H
D. LOCATION OF REINFORCEMENT, CONNECTORS, AND PRESTRESSING TENDONS AND ANCHORAGES	—	X	—	ART. 3.4, 3.6A
E. PRESTRESSING TECHNIQUE	—	X	—	ART. 3.6B
F. PROPERTIES OF THIN-BED MORTAR FOR AAC MASONRY	X[b]	X[c]	—	ART. 2.1C
3. PRIOR TO GROUTING, VERIFY THAT THE FOLLOWING ARE IN COMPLIANCE:				
A. GROUT SPACE	—	X	—	ART. 3.2D, 3.2F
B. GRADE,TYPE, AND SIZE OF REINFORCEMENT AND ANCHOR BOLTS, AND PRESTRESSING TENDONS AND ANCHORAGES	—	X	SEC. 1.16	ART. 2.4, 3.4
C. PLACEMENT OF REINFORCEMENT, CONNECTORS, PRESTRESSING TENDONS AND ANCHORAGES	—	X	SEC. 1.16	ART. 3.2E, 3.4, 3.6A
D. PROPORTION OF SITE-PREPARED GROUT AND PRESTRESSING GROUT FOR BONDED TENDONS	—	X	—	ART. 2.6B, 2.4G.1.B
E. CONSTRUCTION OF MORTAR JOINTS	—	X	—	ART. 3.3B
4. VERIFY DURING CONSTRUCTION:				
A. SIZE AND LOCATION OF STRUCTURAL ELEMENTS	—	X	—	ART. 3.3F
B. TYPE, SIZE AND LOCATION OF ANCHORS, INCLUDING OTHER DETAILS OF ANCHORAGE OF MASONRY TO STRUCTURAL MEMBERS, FRAMES OR OTHER CONSTRUCTION.	—	X	SEC. 1.16.4.3, 1.17.1	—
C. WELDING OF REINFORCEMENT	X	—	SEC. 2.1.7.7.2, 3.3.3.4(c), 8.3.3.4 (b)	—
D. PREPARATION, CONSTRUCTION AND PROTECTION OF MASONRY DURING COLD WEATHER (TEMPERATURE BELOW 40°F (4.4°C)) OR HOT WEATHER (TEMPERATURE ABOVE 90°F (32.2°C)).	—	X	—	ART. 1.8C, 1.8D
E. APPLICATION AND MEASUREMENT OF PRESTRESSING FORCE.	X	—	—	ART. 3.6B
F. PLACEMENT OF GROUT AND PRESTRESSING GROUT FOR BONDED TENDONS IS IN COMPLIANCE	X	—	—	ART.3.5, 3.6C
G. PLACEMENT OF AAC MASONRY UNITS AND CONSTRUCTION OF THIN-BED MORTAR JOINTS	X[b]	X[c]	—	ART. 3.3B.8
5. OBSERVE PREPARATION OF GROUT SPECIMENS, MORTAR SPECIMENS, AND/OR PRISMS	—	X	—	ART. 1.4B.2.A.3, 1.4B.2.B.3, 1.4B.2.C.3 1.4B.3, 1.4B.4

(a) FREQUENCY REFERS TO THE FREQUENCY OF INSPECTION, WHICH MAY BE CONTINUOUS DURING THE TASK LISTED OR PERIODICALLY DURING THE LISTED TASK, AS DEFINED IN THE TABLE.
(b) REQUIRED FOR THE FIRST 5000 SQUARE FEET (465 SQUARE METERS) OF AAC MASONRY.
(c) REQUIRED AFTER THE FIRST 5000 SQUARE FEET (465 SQUARE METERS) OF AAC MASONRY.

REQUIRED VERIFICATION AND INSPECTION OF SOILS

VERIFICATION AND INSPECTION TASK	CONTINUOUS DURING TASK LISTED	PERIODICALLY DURING TASK LISTED
1. VERIFY MATERIALS BELOW SHALLOW FOUNDATIONS ARE ADEQUATE TO ACHIEVE THE DESIGN BEARING CAPACITY.	—	X
2. VERIFY EXCAVATIONS ARE EXTENDED TO PROPER DEPTH AND HAVE REACHED PROPER MATERIAL.	—	X
3. PERFORM CLASSIFICATION AND TESTING OF COMPACTED FILL MATERIALS.	—	X
4. VERIFY USE OF PROPER MATERIALS, DENSITIES AND LIFT THICKNESSES DURING PLACEMENT AND COMPACTION OF COMPACTED FILL.	X	—
5. PRIOR TO PLACEMENT OF CONTROLLED FILL, OBSERVE SUBGRADE AND VERIFY THAT SITE HAS BEEN PREPARED PROPERLY.	—	X

REQUIRED VERIFICATION AND INSPECTION OF WOOD CONSTRUCTION

VERIFICATION AND INSPECTION	CBC REFERENCE
1. INSPECTION OF PREFABRICATED WOOD STRUCTURAL ELEMENTS AND ASSEMBLIES	1704.2.5
2. INSPECTION OF HIGH-LOAD DIAPHRAGMS	1705.5.1
A. VERIFY SHEATHING GRADE AND THICKNESS	—
B. VERIFY NOMINAL SIZE OF FRAMING MEMBERS AT PANEL EDGES	—
C. VERIFY NAIL OR STAPLE DIAMETER AND LENGTH	—
D. VERIFY NUMBER OF FASTENER LINES AND SPACING BETWEEN FASTENERS	—
3. INSPECTION OF METAL-PLATE-CONNECTED WOOD TRUSSES SPANNING 60 FEET OR GREATER: VERIFY THAT TEMPORARY INSTALLATION RESTRAIN/BRACING AND THE PERMANENT TRUSS MEMBERS RESTRAINT/BRACING ARE INSTALLED IN ACCORDANCE WITH THE APPROVED TRUSS SUBMITTAL PACKAGE	1705.5.2

REQUIRED VERIFICATION AND INSPECTION FOR WIND FORCE-RESISTING SYSTEMS

VERIFICATION AND INSPECTION	CONTINUOUS	PERIODIC	CBC REFERENCE
1. STRUCTURAL WOOD:			
A. FIELD GLUING OPERATIONS OF THE MAIN WIND FORCE-RESISTING SYSTEM	X	—	1705.10.1
B. NAILING, BOLTING, ANCHORING AND OTHER FASTENING OF COMPONENTS WITHIN THE MAIN WIND FORCE-RESISTING SYSTEM, INCLUDING WOOD SHEAR WALLS, WOOD DIAPHRAGMS, DRAG STRUTS, BRACES, AND HOLDOWNS	—	X	1705.10.1
2. COLD-FORMED STEEL LIGHT-FRAME CONSTRUCTION:			
A. WELDING OPERATIONS OF ELEMENTS OF THE MAIN WIND FORCE-RESISTING SYSTEM	—	X	1705.10.2
B. SCREW ATTACHMENT, BOLTING, ANCHORING AND OTHER FASTENING OF COMPONENTS WITHIN THE MAIN WIND FORCE-RESISTING SYSTEM, INCLUDING WOOD SHEAR WALLS, DIAPHRAGMS, DRAG STRUTS, BRACES, AND HOLDOWNS	—	X	1705.10.2

REQUIRED VERIFICATION AND INSPECTION FOR SEISMIC FORCE-RESISTING SYSTEMS

VERIFICATION AND INSPECTION	CONTINUOUS	PERIODIC	CBC REFERENCE
1. STRUCTURAL WOOD:			
A. FIELD GLUING OPERATIONS OF THE MAIN WIND FORCE-RESISTING SYSTEM	X	—	1705.11.2
B. NAILING, BOLTING, ANCHORING AND OTHER FASTENING OF COMPONENTS WITHIN THE MAIN WIND FORCE-RESISTING SYSTEM, INCLUDING WOOD SHEAR WALLS, WOOD DIAPHRAGMS, DRAG STRUTS, BRACES, AND HOLDOWNS	—	X	1705.11.2
2. COLD-FORMED STEEL LIGHT-FRAME CONSTRUCTION:			
A. WELDING OPERATIONS OF ELEMENTS OF THE MAIN WIND FORCE-RESISTING SYSTEM	—	X	1705.11.3
B. SCREW ATTACHMENT, BOLTING, ANCHORING AND OTHER FASTENING OF COMPONENTS WITHIN THE MAIN WIND FORCE-RESISTING SYSTEM, INCLUDING WOOD SHEAR WALLS, DIAPHRAGMS, DRAG STRUTS, BRACES, AND HOLDOWNS	—	X	1705.11.3

REQUIRED VERIFICATION OF STEEL CONSTRUCTION OTHER THAN STRUCTURAL STEEL

VERIFICATION AND INSPECTION TASK	CONTINUOUS	PERIODIC	REFERENCED STANDARD
1. MATERIAL VERIFICATION OF COLD-FORMED STEEL DECK:			
A. IDENTIFICATION MARKINGS TO CONFORM TO ASTM STANDARDS SPECIFIED IN THE APPROVED CONSTRUCTION DOCUMENTS	—	X	APPLICABLE ASTM MATERIAL STANDARDS
B. MANUFACTURER'S CERTIFIED TEST REPORTS	—	X	
2. INSPECTION OF WELDING:			
A. COLD-FORMED STEEL DECK:			
1. FLOOR AND ROOF DECK WELDS	—	X	AWS D1.3
B. REINFORCING STEEL:			
1. VERIFICATION OF WELDABILITY OF REINFORCING STEEL OTHER THAN ASTM A706	—	X	AWS D1.4, ACI 318: CBC SECTION 3.5.2
2. REINFORCING STEEL RESISTING FLEXURAL AND AXIAL FORCES IN INTERMEDIATE AND SPECIAL MOMENT FRAMES, AND BOUNDARY ELEMENTS OF SPECIAL STRUCTURAL WALLS OF CONCRETE AND SHEAR REINFORCEMENT	X	—	
3. SHEAR REINFORCEMENT	X	—	
4. OTHER REINFORCING STEEL	—	X	

AXIS GFA
1130 WESTWOOD BLVD
LOS ANGELES, CA 90024
T 310.209.7520
F 310.209.7516
www.axisgfa.com

PROJECT NAME

Residence Inn® Marriott.

840 KILDARE STREET,
LANCASTER, CA

OWNER:

INSITE REAL STATE DEVELOPMENT
6265 VARIEL AVENUE
WOODLAND HILLS, CA 91367

Thornton Tomasetti
Thornton Tomasetti, Inc.
707 Wilshire Blvd, Suite 4450
Los Angeles, CA 90017-3618
T 213.330.7000 F 213.330.7001

Project Status

REGISTERED PROFESSIONAL ENGINEER
GOKHAN GANTRU ERKMEN
No. S4416
Exp. 6/30/18
STRUCTURAL
STATE OF CALIFORNIA

NO.	DATE	ISSUES AND REVISIONS	BY
	10.13.17	DESIGN DEVELOPMENT	
	11.20.17	CD PROGRESS SET	
	12.18.17	PLAN CHECK	
	02.16.18	PLAN CHECK	

DATE
SCALE AS NOTED
PROJECT NUMBER
COMPUTER FILE S17081
PROJECT NAME

DESCRIPTION
SPECIAL INSPECTIONS AND STRUCTURAL TESTING

SHEET NUMBER
S0.20

ALL DRAWINGS AND WRITTEN MATERIAL APPEARING HEREIN CONSTITUTE ORIGINAL AND UNPUBLISHED WORK OF THE ARCHITECT AND MAY NOT BE DUPLICATED, USED OR DISCLOSED WITHOUT WRITTEN CONSENT OF THE ARCHITECT

SO STRUCTURAL OBSERVATION

S0-1) STRUCTURAL OBSERVATION IS REQUIRED FOR THE STRUCTURAL SYSTEM IN ACCORDANCE WITH THE CBC SECTION 1710. STRUCTURAL OBSERVATION IS THE VISUAL OBSERVATION AT THE CONSTRUCTION SITE OF THE ELEMENTS AND CONNECTIONS OF THE STRUCTURAL SYSTEM AT SIGNIFICANT CONSTRUCTION STAGES, AND THE COMPLETE STRUCTURE FOR GENERAL CONFORMANCE TO THE APPROVED PLANS AND SPECIFICATIONS. STRUCTURAL OBSERVATION DOES NOT WAIVE THE RESPONSIBILITY FOR THE INSPECTIONS REQUIRED CBC SECTIONS 110 AND 1704.

SO-2) THE OWNER SHALL EMPLOY A STATE OF CALIFORNIA REGISTERED CIVIL OR STRUCTURAL ENGINEER OR LICENSED ARCHITECT TO PERFORM THE STRUCTURAL OBSERVATION. ENFORCEMENT AGENCY REQUIRES THE USE OF THE ENGINEER OR ARCHITECT, OR HIS/HER DESIGNEE RESPONSIBLE FOR THE STRUCTURAL DESIGN WHO ARE INDEPENDENT OF THE CONTRACTOR.

S0-3) THE STRUCTURAL OBSERVER SHALL PROVIDE EVIDENCE OF EMPLOYMENT BY THE OWNER OR THE OWNER'S REPRESENTATIVE. A LETTER FROM THE OWNER, THE OWNER'S REPRESENTATIVE, OR A COPY OF THE AGREEMENT FOR SERVICES SHALL BE SENT TO THE BUILDING INSPECTOR BEFORE THE FIRST SITE VISIT.

SO-4) THE OWNER OR OWNER'S REPRESENTATIVE SHALL COORDINATE AND CALL FOR A MEETING BETWEEN THE ENGINEER OR ARCHITECT RESPONSIBLE FOR THE STRUCTURAL DESIGN, STRUCTURAL OBSERVER, CONTRACTOR, AFFECTED SUBCONTRACTORS AND DEPUTY INSPECTORS. THE PURPOSE OF THE MEETING SHALL BE TO IDENTIFY THE MAJOR STRUCTURAL ELEMENTS AND CONNECTIONS THAT AFFECT THE VERTICAL AND LATERAL LOAD SYSTEMS OF THE STRUCTURE AND TO REVIEW SCHEDULING OF THE REQUIRED OBSERVATIONS. A RECORD OF THE MEETING SHALL BE INCLUDED IN THE FIRST OBSERVATION REPORT SUBMITTED TO THE BUILDING INSPECTOR.

SO-5) THE STRUCTURAL OBSERVER SHALL PERFORM SITE VISITS AT THOSE STEPS IN THE PROGRESS OF THE WORK THAT ALLOW FOR CORRECTION OF DEFICIENCIES WITHOUT SUBSTANTIAL EFFORT OR UNCOVERING OF THE WORK INVOLVED. AT A MINIMUM, THE LISTED SIGNIFICANT CONSTRUCTION STAGES TABLE BELOW OBSERVATION/SIGNIFICANT CONSTRUCTION STAGES" FORM OR THE "STRUCTURAL OBSERVATION PROGRAM AND REQUIRE A SITE VISIT AND AN OBSERVATION REPORT FROM THE STRUCTURAL OBSERVER

SO-6) THE STRUCTURAL OBSERVER SHALL PREPARE A REPORT FOR EACH SIGNIFICANT STAGE OF CONSTRUCTION OBSERVED. THE ORIGINAL OF THE STRUCTURAL OBSERVATION REPORT SHALL BE SENT TO THE BUILDING INSPECTOR'S OFFICE AND SHALL BE SIGNED AND SEALED (WET STAMP) BY THE RESPONSIBLE STRUCTURAL OBSERVER. ONE COPY OF THE OBSERVATION REPORT SHALL BE ATTACHED TO THE APPROVED PLANS. THE COPY ATTACHED TO THE PLANS SHALL BE SIGNED AND SEALED (WET STAMP) BY THE RESPONSIBLE STRUCTURAL OBSERVER OR THEIR DESIGNEE. COPIES OF THE REPORT SHALL ALSO BE GIVEN TO THE OWNER, CONTRACTOR, AND DEPUTY INSPECTOR. ANY DEFICIENCY NOTED ON THE OBSERVATION REPORT WILL BECOME THE RESPONSIBILITY OF THE STRUCTURAL ENGINEER OR ARCHITECT OF RECORD TO VERIFY ITS COMPLETION BY THE STRUCTURAL OBSERVER.

S0-7) A FINAL OBSERVATION REPORT MUST BE SUBMITTED WHICH SHOWS THAT ALL OBSERVED DEFICIENCIES WERE RESOLVED AND STRUCTURAL SYSTEM GENERALLY CONFORMS WITH THE APPROVED PLANS AND SPECIFICATIONS. STRUCTURAL WORK WILL NOT BE ACCEPTED WITHOUT THIS FINAL OBSERVATION REPORT AND THE CORRECTION OF SPECIFIC DEFICIENCIES NOTED DURING NORMAL BUILDING INSPECTION.

S0-8) THE STRUCTURAL OBSERVER SHALL PROVIDE THE ORIGINAL STAMPED AND SIGNED STRUCTURAL OBSERVATION REPORT TO THE BUILDING INSPECTOR.

S0-9) WHEN THERE IS A NEED TO REPLACE THE STRUCTURAL OBSERVER OF RECORD, THE OWNER SHALL:

a) NOTIFY THE BUILDING INSPECTOR IN WRITING BEFORE THE NEXT INSPECTION
b) CALL AN ADDITIONAL PRECONSTRUCTION MEETING, AND
c) FURNISH THE REPLACEMENT STRUCTURAL OBSERVER WITH A COPY OF ALL PREVIOUS OBSERVATION REPORTS.
d) THE REPLACEMENT STRUCTURAL OBSERVER SHALL APPROVE THE CORRECTION OF THE ORIGINAL OBSERVED DEFICIENCIES SHALL BE CORRECTED ANY PROPERLY NOTED DEFICIENCIES WITHOUT CONSIDERATION OF THEIR SOURCE.

SO-10) THE ENGINEER OR ARCHITECT OF RECORD SHALL DEVELOP ALL CHANGES RELATING TO THE STRUCTURAL SYSTEMS. THE ENFORCEMENT AGENCY SHALL REVIEW AND APPROVE ALL CHANGES TO THE APPROVED PLANS AND SPECIFICATIONS.

S0-11) STRUCTURAL OBSERVATION/SIGNIFICANT CONSTRUCTION STAGES:

CONSTRUCTION STAGE	CONSTRUCTION TYPE	ELEMENTS/CONNECTIONS TO BE OBSERVED
FOUNDATIONS	■ FOOTING, STEM WALLS PIERS ☐ MAT FOUNDATION ☐ CAISSON, PILE, GRADE BEAMS ☐ FOUNDATION ☐ ANCHORS ☐ OTHERS	REINFORCEMENT IN PLACE PRIOR TO FIRST SIGNIFICANT FOUNDATION POUR
WALLS	■ CONCRETE ■ MASONRY ■ WOOD ☐ OTHERS	REINFORCEMENT IN PLACE PRIOR TO FIRST SIGNIFICANT WALL POUR SHEAR WALL NAILING AND TIEDOWNS FOR LOWEST LEVEL OF WOOD CONSTRUCTION
FRAMES	☐ STEEL MOMENT FRAME ☐ STEEL BRACED FRAME ☐ CONCRETE MOMENT FRAME ☐ OTHERS	
DIAPHRAGMS	■ CONCRETE ☐ METAL DECK ■ WOOD ☐ OTHERS	REINFORCEMENT IN PLACE PRIOR TO FIRST SIGNIFICANT POUR OF PODIUM LEVEL (LEVEL2) REINFORCEMENT IN PLACE PRIOR TO POUR OF POOL DECK (LEVEL3) DIAPHRAGM NAILING FOR LOWEST LEVEL OF WOOD CONSTRUCTION DIAPHRAGM NAILING FOR ROOF LEVEL
COMPLETION		ALL OBSERVED DEFICIENCIES RESOLVED

CONDITIONS SIMILAR TO THOSE FOR WHICH STRUCTURAL OBSERVATION HAS BEEN PREVIOUSLY PERFORMED MAY BE INSPECTED BY THE SPECIAL INSPECTOR WITHOUT STRUCTURAL OBSERVATION AT THE DISCRETION OF THE ENFORCEMENT AGENCY

AXIS GFA

1130 WESTWOOD BLVD
LOS ANGELES, CA 90024
T 310.209.7520
F 310.209.7516
www.axisgfa.com

PROJECT NAME

Residence Inn® Marriott.

840 KILDARE STREET,
LANCASTER, CA

OWNER:

INSITE REAL STATE
DEVELOPMENT
6265 VARIEL AVENUE
WOODLAND HILLS, CA 91367

Thornton Tomasetti

Thornton Tomasetti, Inc.
707 Wilshire Blvd, Suite 4450
Los Angeles, CA 90017-3618
T 213.330.7000 F 213.330.7001

Project Status

REGISTERED PROFESSIONAL ENGINEER
CHANDRA GANTRI TRAVER
No. S4416
Exp. 6/30/18
STRUCTURAL
STATE OF CALIFORNIA

NO.	DATE	ISSUES AND REVISIONS	BY
	10.13.17	DESIGN DEVELOPMENT	
	11.20.17	CD PROGRESS SET	
	12.18.17	PLAN CHECK	
	02.16.18	PLAN CHECK	

DATE

SCALE AS NOTED

PROJECT NUMBER

COMPUTER FILE **S17081**

PROJECT NAME

DESCRIPTION
STRUCTURAL OBSERVATION

SHEET NUMBER
S0.21

ALL DRAWINGS AND WRITTEN MATERIAL APPEARING HEREIN CONSTITUTE ORIGINAL AND UNPUBLISHED WORK OF THE ARCHITECT AND MAY NOT BE DUPLICATED, USED OR DISCLOSED WITHOUT WRITTEN CONSENT OF THE ARCHITECT

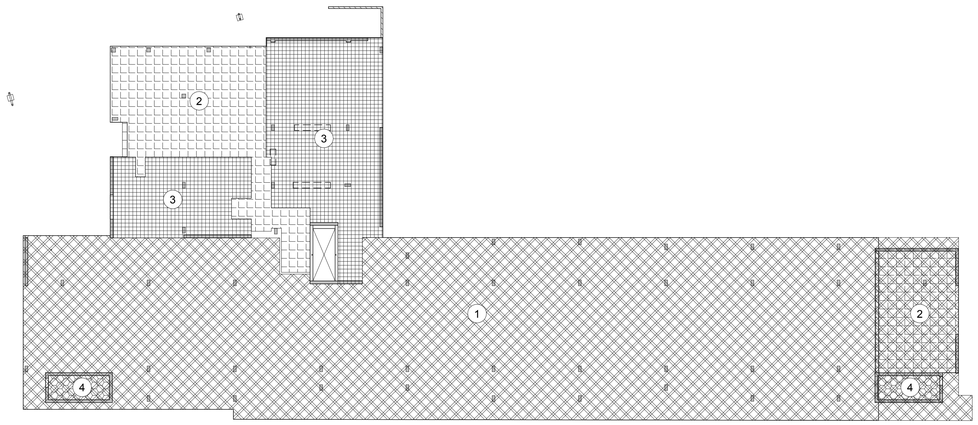

1 FIRST FLOOR LOADING PLAN
3/64" = 1'-0"

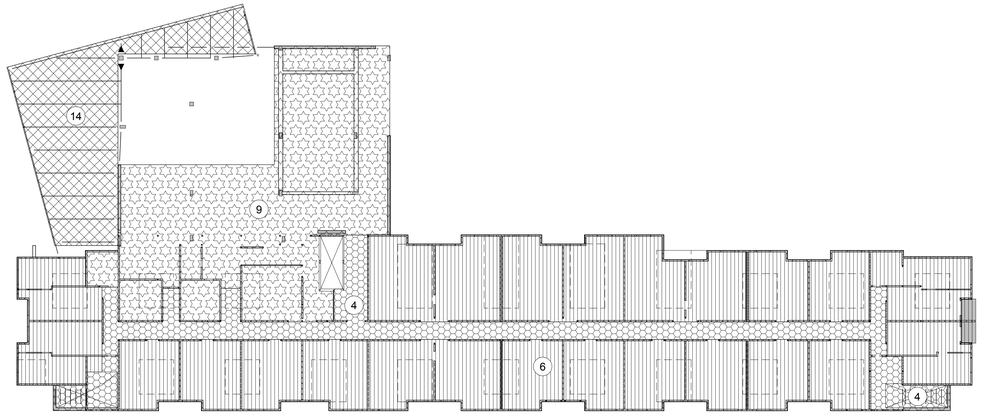

2 SECOND FLOOR LOADING PLAN
3/64" = 1'-0"

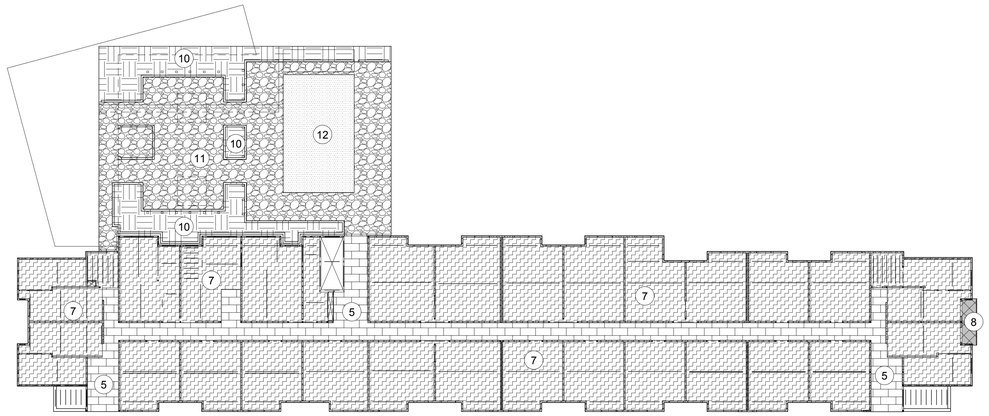

3 THIRD FLOOR LOADING PLAN
3/64" = 1'-0"

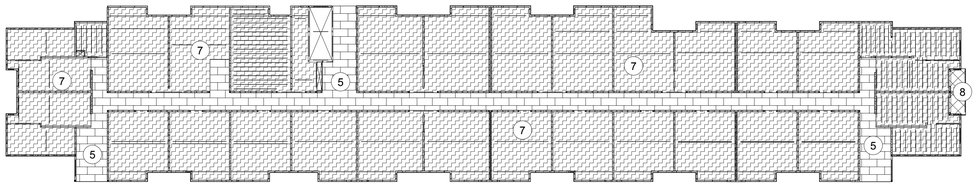

4 FOURTH & FIFTH FLOOR LOADING PLAN
3/64" = 1'-0"

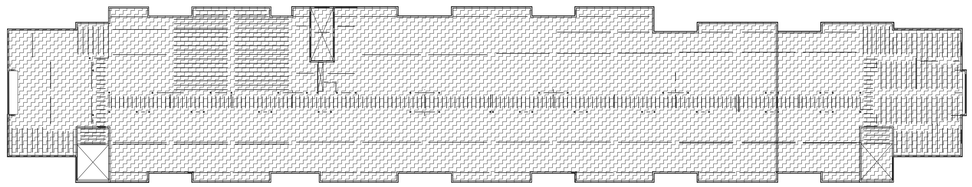

5 ROOF LOADING PLAN
3/64" = 1'-0"

DESIGN LOAD SCHEDULE

USE	DESIGNATION	LIVE LOAD (PSF)	SUPERIMPOSED LOAD (psf / kPa)				NOTES
			SUPERIMPOSED DEAD LOAD PSF				
		LL	CEILING / LIGHTING / MEP	FLOOR FINISHES	PARTITION	TOTAL SDL	
PARKING	1	40	5	-		5	
LOBBY/RETAIL	2	100 (NOT REDUCED)	5	-		5	
OFFICE	3	50	5	-		5	
CORRIDORS / STAIRS (CONCRETE)	4	100 (NOT REDUCED)	5	2		7	
CORRIDORS / STAIRS (WOOD)	5	100 (NOT REDUCED)	8	16		24	
RESIDENTIAL (CONCRETE)	6	40	8	5		7	
RESIDENTIAL (WOOD FRAME)	7	40	10	20		30	
RESIDENTIAL BALCONIES	8	60	8	16		24	
STORAGE/GYMNASIUM	9	100 (NOT REDUCED)	8	20		28	
PLANTERS	10	20 (NOT REDUCED)	8	240		248	
POOL DECK	11	100 (NOT REDUCED)	5	24		29	
POOL	12	100 (NOT REDUCED)	5	325		330	
ROOF	13	20 (NOT REDUCED)	15	6		23	
CANOPY ROOF	14	20 (NOT REDUCED)	15	-		15	

7 DESIGN LOAD SCHEDULE
1" = 1'-0"

AXIS GFA

1130 WESTWOOD BLVD
LOS ANGELES, CA 90024
T 310.209.7520
F 310.209.7516
www.axisgfa.com

PROJECT NAME

Residence Inn® Marriott.

840 KILDARE STREET,
LANCASTER, CA

OWNER:

INSITE REAL STATE
DEVELOPMENT
6265 VARIEL AVENUE
WOODLAND HILLS, CA 91367

Thornton Tomasetti
Thornton Tomasetti, Inc.
707 Wilshire Blvd, Suite 4450
Los Angeles, CA 90017-3618
T 213.330.7000 F 213.330.7001

Project Status

REGISTERED PROFESSIONAL ENGINEER
STEPHANIE TAYLOR-ZIEGLER
No. S4416
Exp. 6/30/18
STRUCTURAL
STATE OF CALIFORNIA

NO.	DATE	ISSUES AND REVISIONS	BY
	10.13.17	DESIGN DEVELOPMENT	
	11.20.17	CD PROGRESS SET	
	12.18.17	PLAN CHECK	
	02.16.18	PLAN CHECK	

DATE

SCALE AS NOTED

PROJECT NUMBER

COMPUTER FILE S17081

PROJECT NAME

DESCRIPTION
LOADING DIAGRAMS

SHEET NUMBER
S0.40

ALL DRAWINGS AND WRITTEN MATERIAL APPEARING HEREIN CONSTITUTE ORIGINAL AND UNPUBLISHED WORK OF THE ARCHITECT AND MAY NOT BE DUPLICATED, USED OR DISCLOSED WITHOUT WRITTEN CONSENT OF THE ARCHITECT

GRADE 60 REINFORCING

CONCRETE STRENGTH	f'c = 3000 PSI				f'c = 4000 PSI				f'c = 5000 PSI			
CLASS OF LAP SPLICE	CLASS "A"		CLASS "B"		CLASS "A"		CLASS "B"		CLASS "A"		CLASS "B"	
BAR SIZE \ CASE	TOP BARS	OTHER BARS	TOP BARS	OTHER BARS	TOP BARS	OTHER BARS	TOP BARS	OTHER BARS	TOP BARS	OTHER BARS	TOP BARS	OTHER BARS
#3	1'-10"	1'-5"	2'-4"	1'-10"	1'-7"	1'-3"	2'-1"	1'-7"	1'-5"	1'-1"	1'-10"	1'-5"
#4	2'-5"	1'-10"	3'-1"	2'-5"	2'-1"	1'-7"	2'-9"	2'-1"	1'-11"	1'-5"	2'-5"	1'-11"
#5	3'-0"	2'-4"	3'-11"	3'-0"	2'-7"	2'-0"	3'-5"	2'-7"	2'-4"	1'-10"	3'-0"	2'-4"
#6	3'-7"	2'-9"	4'-8"	3'-7"	3'-1"	2'-5"	4'-1"	3'-1"	2'-10"	2'-2"	3'-8"	2'-10"
#7	5'-3"	4'-0"	6'-9"	5'-3"	4'-6"	3'-6"	5'-11"	4'-6"	4'-1"	3'-2"	5'-3"	4'-1"
#8	6'-0"	4'-7"	7'-9"	6'-0"	5'-2"	4'-0"	6'-9"	5'-2"	4'-8"	3'-7"	6'-0"	4'-8
#9	6'-9"	5'-2"	8'-9"	6'-9"	5'-10"	4'-6"	7'-7"	5'-10"	5'-3"	4'-0"	6'-9"	5'-3"
#10	7'-7"	5'-10"	9'-10"	7'-7"	6'-7"	5'-1'	8'-6"	6'-7"	5'-11"	4'-6"	7'-8"	5'-11"
#11	8'-5"	6'-6"	10'-11"	8'-5"	7'-3"	5'-7"	9'-5"	7'-3"	6'-6"	5'-0"	8'-6"	6'-6"

GRADE 60 REINFORCING

CONCRETE STRENGTH	f'c = 5500 PSI				f'c = 6000 PSI				f'c = 8000 PSI			
CLASS OF LAP SPLICE	CLASS "A"		CLASS "B"		CLASS "A"		CLASS "B"		CLASS "A"		CLASS "B"	
BAR SIZE \ CASE	TOP BARS	OTHER BARS	TOP BARS	OTHER BARS	TOP BARS	OTHER BARS	TOP BARS	OTHER BARS	TOP BARS	OTHER BARS	TOP BARS	OTHER BARS
#3	1'-4"	1'-1"	1'-9"	1'-5"	1'-3"	1'-0"	1'-8"	1'-4"	1'-1"	0'-10"	1'-6"	1'-2"
#4	1'-10"	1'-4"	2'-4"	1'-10"	1'-8"	1'-3"	2'-3"	1'-9"	1'-5"	1'-1"	1'-11"	1'-6"
#5	2'-3"	1'-9"	2'-11"	2'-3"	2'-1"	1'-7"	2'-9"	2'-2"	1'-10"	1'-5"	2'-5"	1'-10"
#6	2'-8"	2'-9"	3'-6"	2'-9"	2'-6"	1'-11"	3'-4"	2'-7"	2'-2"	1'-8"	2'-11"	2'-3"
#7	3'-11"	3'-0"	5'-1"	3'-11"	3'-8"	2'-10"	4'-10"	3'-9"	3'-2"	2'-5"	4'-2"	3'-3"
#8	4'-5"	3'-5"	5'-9"	4'-5"	4'-2"	3'-3"	5'-6"	4'-3"	3'-8"	2'-10"	4'-9"	3'-8
#9	5'-0"	3'-10"	6'-6"	5'-0"	4'-9"	3'-8"	6'-2"	4'-9"	4'-1"	3'-2"	5'-4"	4'-2"
#10	5'-8"	4'-3"	7'-4"	5'-8"	5'-4"	4'-1"	7'-0"	5'-4"	4'-7"	3'-7"	6'-0"	4'-8"
#11	6'-3"	4'-10"	8'-2"	6'-3"	5'-11"	4'-7"	7'-9"	5'-11"	5'-1"	3'-11"	6'-8"	5'-2"

NOTES:

1. UNLESS INDICATED OTHERWISE, USE THE CLASS "B" LAP SPLICE LENGTHS, MULTIPLIED BY THE APPLICABLE FACTOR(S) LISTED BELOW.
2. INCREASE THE LAP SPLICE OR DEVELOPMENT LENGTH BY 50% FOR ANY OF THE FOLLOWING CONDITIONS:
   A. THE BAR COVER IS LESS THAN OR EQUAL TO THE BAR DIAMETER.
   B. WHERE STIRRUPS OR TIES ARE SHOWN IN THE DRAWINGS THROUGHOUT LAP SPLICE OR DEVELOPMENT LENGTH AND THE CLEAR SPACING OF BARS PER (A) IS LESS THAN 1 BAR DIAMETER.
   C. WHERE STIRRUPS OR TIES ARE NOT SHOWN THROUGHOUT LAP SPLICE OR DEVELOPMENT LENGTH AND THE CLEAR SPACING OF BARS PER (A) IS LESS THAN 2 BAR DIAMETERS.
3. A CLASS "A" SPLICE MAY BE USED ONLY WHERE NOTED ON THE DRAWINGS. WHERE DEVELOPMENT LENGTH (Ld) IS REQUIRED OR CALLED OUT ON THE DRAWINGS, USE CLASS "A" LAP SPLICE LENGTH.
4. CLASS "B" LAP SPLICE EQUALS "LTS".
5. TOP BARS ARE HORIZONTAL BARS WITH MORE THAN 12 INCHES OF CONCRETE CAST BELOW THE BARS.
6. LAP SPLICE LENGTHS IN TABLE ARE FOR NORMAL WEIGHT CONCRETE. WHERE LIGHTWEIGHT AGGREGATE CONCRETE IS USED, INCREASE LAP SPLICE LENGTH BY 33%.
7. SPLICES OF HORIZONTAL REINFORCEMENT IN WALLS SHALL BE STAGGERED.
8. SPLICES OF HORIZONTAL REINFORCEMENT IN WALLS CONTAINING TWO CURTAINS OF REINFORCEMENT SHALL NOT OCCUR IN THE SAME LOCATION.
9. IN SHOTCRETE WALLS SPLICES IN REINFORCING BARS SHALL BE BY THE NON-CONTACT LAP SPLICE METHOD WITH AT LEAST 2 INCHES CLEARANCE BETWEEN BARS. THE BUILDING OFFICIAL ANY PERMIT THE USE OF CONTACT LAP SPLICES WHEN NECESSARY FOR THE SUPPORT OF THE REINFORCING PROVIDED IT CAN BE DEMONSTRATED BY MEANS OF PRE-CONSTRUCTION TESTING, THAT ADEQUATE ENCASEMENT OF THE BARS AT THE SPLICE CAN BE ACHIEVED, AND PROVIDED THAT THE SPLICES ARE PLACED SO THAT A LINE THROUGH THE CENTER OF THE TWO SPLICED BARS IS PERPENDICULAR TO
10. THE SURFACE OF THE SHOTCRETE WORK.

    MECHANICAL BAR COUPLERS (ICC APPROVED) MAY BE USED AS AN ALTERNATE TO LAP SPLICES. MECHANICAL COUPLER SHALL BE ADEQUATE TO TRANSFER 125% OF THE YIELD STRENGTH OF THE
11. REINFORCING BARS WHICH ARE SPLICED.

    WHEN BARS OF DIFFERENT SIZE ARE LAP SPLICED, THE SPLICE LENGTH SHALL BE THE LARGER OF THE FOLLOWING:
    A. Ld OF THE LARGER BAR.
    B. LAP SPLICE LENGTH OF THE SMALLER BAR.

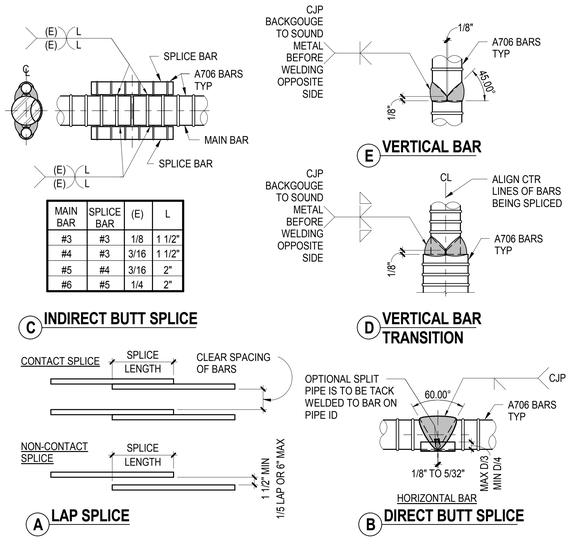

MAIN BAR	SPLICE BAR	(E)	L
#3	#3	1/8	1 1/2"
#4	#3	3/16	1 1/2"
#5	#4	3/16	2"
#6	#5	1/4	2"

C INDIRECT BUTT SPLICE

E VERTICAL BAR

D VERTICAL BAR TRANSITION

A LAP SPLICE

B DIRECT BUTT SPLICE

1 REBAR OFFSET, LAP SPLICE, DEVELOPMENT LENGTH, AND BUTT SPLICE
NOT TO SCALE

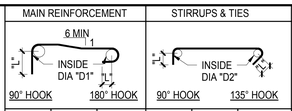

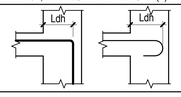

BAR SIZE	MAIN REINFORCEMENT: 90° HOOK LENGTH "L"	INSIDE DIA "D1"	180° HOOK LENGTH "L"	STIRRUPS & TIES: 90° HOOK LENGTH "L"	INSIDE DIA "D2"	135° HOOK LENGTH "L"	Ldh, DEVELOPMENT LENGTH (1) CONCRETE STRENGTH: f'c = 3000 PSI	f'c = 4000 PSI	f'c = 5000 PSI	f'c = 6000 PSI	f'c = 8000 PSI
#3	4 1/2"	2 1/4"	2 1/2"	3"	1 1/2"	3"	0'-8"	0'-7"	0'-6"	0'-6"	0'-5"
#4	6"	3"	2 1/2"	3"	2"	3"	0'-11"	0'-9"	0'-9"	0'-8"	0'-7"
#5	7 1/2"	3 3/4"	2 1/2"	3 3/4"	2 1/2"	3 3/4"	1'-2"	1'-0"	0'-11"	0'-10"	0'-8"
#6	9"	4 1/2"	3"	9"	4 1/2"	4 1/2"	1'-4"	1'-2"	1'-1"	1'-0"	0'-10"
#7	10 1/2"	5 1/4"	3 1/2"	10 1/2"	5 1/4"	5 1/4"	1'-7"	1'-5"	1'-3"	1'-2"	1'-0"
#8	1'-0"	6"	4"	1'-0"	6"	6"	1'-10"	1'-7"	1'-5"	1'-4"	1'-1"
#9	1'-1 1/2"	9 1/2"	4 1/2"	-	-	-	2'-1"	1'-9"	1'-7"	1'-6"	1'-3"
#10	1'-3 1/4"	10 3/4"	5 1/4"	-	-	-	2'-3"	2'-0"	1'-10"	1'-7"	1'-5"
#11	1'-5"	1'-0"	5 3/4"	-	-	-	2'-6"	2'-2"	2'-0"	1'-9"	1'-7"

NOTE:

1. DEVELOPMENT LENGTHS IN TABLE ARE FOR NORMAL WEIGHT CONCRETE.
   WHERE LIGHTWEIGHT AGGREGATE CONCRETE IS USED, INCREASE DEVELOPMENT LENGTH BY 33%.

4 HOOKED DEVELOPMENT LENGTH
NOT TO SCALE

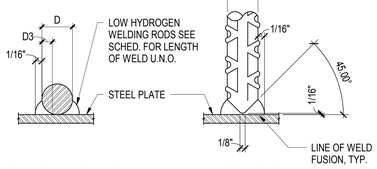

FLARE BEVEL WELD

BUTT WELD

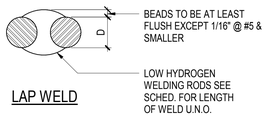

LAP WELD

MINIMUM WELD REQUIREMENTS FOR LAP WELDING	
BAR SIZE	WELD LENGTH (EACH SIDE)
#3	2"
#4	2 1/2"
#5	3"
#6	3 1/2"
#7	4"

6 REBAR WELD TO PLATE
3/4" = 1'-0"

AXIS GFA
1130 WESTWOOD BLVD
LOS ANGELES, CA 90024
T 310.209.7520
F 310.209.7516
www.axisgfa.com

PROJECT NAME

Residence Inn® Marriott.

840 KILDARE STREET,
LANCASTER, CA

OWNER:

INSITE REAL STATE DEVELOPMENT
6265 VARIEL AVENUE
WOODLAND HILLS, CA 91367

Thornton Tomasetti
Thornton Tomasetti, Inc.
707 Wilshire Blvd, Suite 4450
Los Angeles, CA 90017-3618
T 213.330.7000 F 213.330.7001

Project Status

REGISTERED PROFESSIONAL ENGINEER
CHARLES QIAN TRU
No. S4416
Exp. 6/30/18
STRUCTURAL
STATE OF CALIFORNIA

NO.	DATE	ISSUES AND REVISIONS	BY
	10.13.17	DESIGN DEVELOPMENT	
	11.20.17	CD PROGRESS SET	
	12.18.17	PLAN CHECK	
	02.16.18	PLAN CHECK	

DATE

SCALE AS NOTED

PROJECT NUMBER

COMPUTER FILE S17081

PROJECT NAME

DESCRIPTION
LAP SPLICE, DEVELOPMENT LENGTH AND STANDARD HOOKS SCHEDULES

S0.51

ALL DRAWINGS AND WRITTEN MATERIAL APPEARING HEREIN CONSTITUTE ORIGINAL AND UNPUBLISHED WORK OF THE ARCHITECT AND MAY NOT BE DUPLICATED, USED OR DISCLOSED WITHOUT WRITTEN CONSENT OF THE ARCHITECT

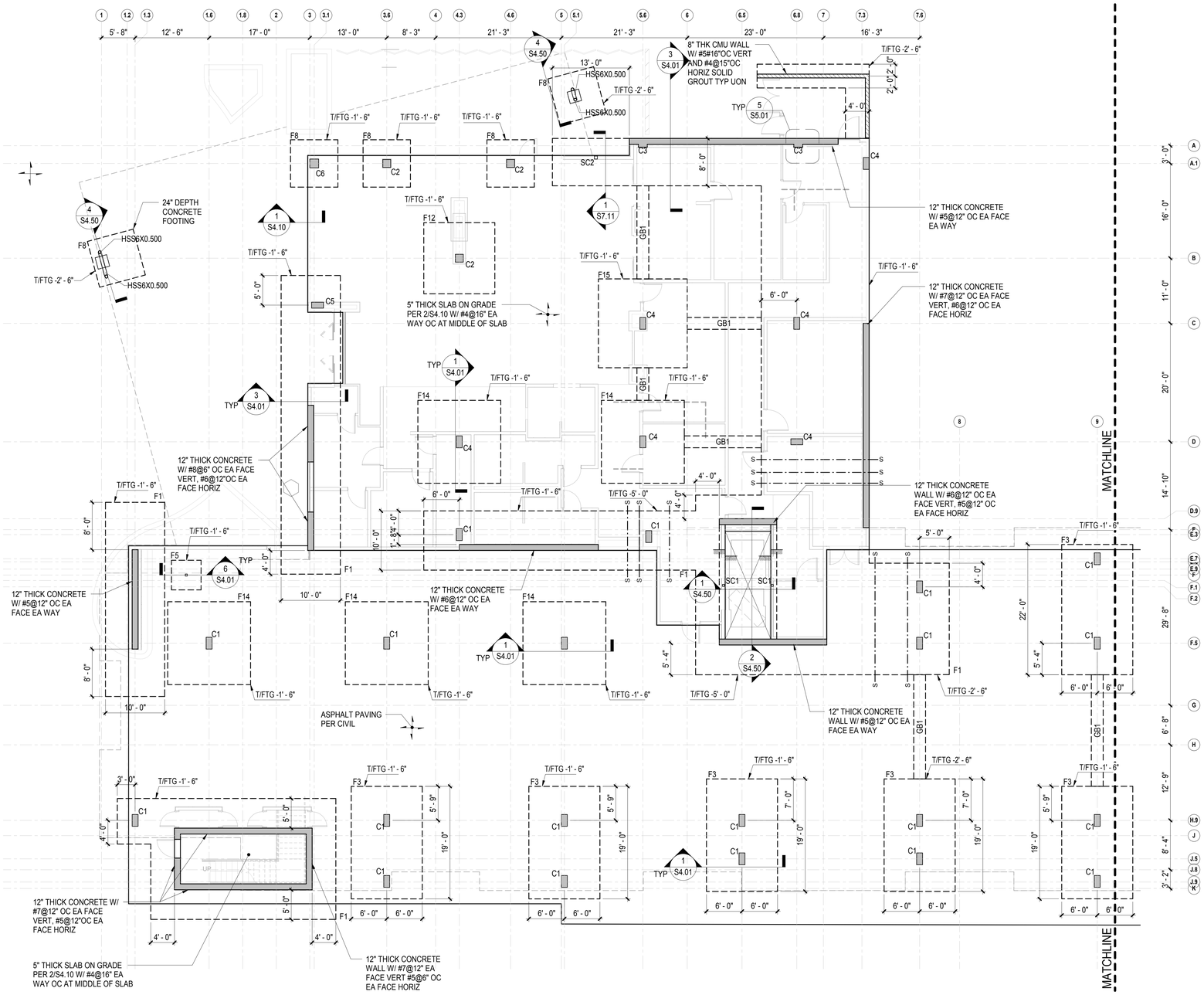

1 FIRST FLOOR FOUNDATION PLAN - A

1/8" = 1'-0"

FOUNDATION PLAN NOTES

1. SEE GENERAL NOTES ON SHEETS S0.10 TO S0.11.
2. SEE TYPICAL FOUNDATION AND SLAB ON GRADE DETAILS ON S4 SERIES SHEETS.
3. VERIFY ALL DIMENSIONS AND ELEVATIONS WITH ARCHITECTURAL DRAWINGS
4. FOUNDATION PLAN IS TAKEN ABOVE SLAB-ON-GRADE. NOMINAL TOP OF SLAB ELEVATION IS CALLED OUT IN PLAN. RELATIVE SLAB ELEVATIONS WITH RESPECT TO SLAB REFERENCE ELEVATION ARE SHOWN THUS: [-X'-X"] SEE ARCHTECTURAL DRAWINGS FOR REFERENCE ELEVATIONS.
5. ELEVATIONS OF TOP OF FOOTINGS WITH RESPECT TO SLAB REFERENCE. ELEVATIONS ARE SHOWN THUS: [T/FTG-X'-X"].
6. EXCAVATIONS SHALL BE MADE AS NEAR AS POSSIBLE TO THE NEAT LINES REQUIRED BY THE SIZE AND SHAPE OF THE STRUCTURE. NO MATERIAL IS TO BE EXCAVATED UNNECESSARILY.
7. ALL FOUNDATION EXCAVATIONS MUST BE REVIEWED AND APPROVED BY THE SOILS ENGINEER PRIOR TO PLACEMENT OF CONCRETE.
8. VERIFY LOCATION OF UNDERGROUND UTILITIES BEFORE EXCAVATIONS. NOTIFY ARCHITECT PRIOT TO EXCAVATION IN THE EVENT SUCH UTILITIES ARE ENCOUNTERED.
9. CONTRACTOR SHALL COORDINATE ALL UTILITY PENETRATIONS THROUGH FOOTINGS, CONCRETE WALLS, AND SLABS WITH DETAILS ON SHEET S4.01
10. FOR DRAINAGE DETAILS, SUMPS, PITS, DAMP PROOFING, TRENCHES, CURBS, EXTERIOR WALKS, UTILITIES, EQUIPMENT DETAILS, STEPS, ETC., SEE DRAWINGS OTHER THAN STRUCTURAL.
11. SLAB CONSTRUCTION AND CONTROL JOINT LOCATIONS SHALL BE APPROVED THE THE ARCHITECT PRIOR TO PLACING ANY CONCRETE.
12. CURBS AND DEPRESSIONS ARE SHOWN FOR REFERENCE ONLY. SEE ARCH DWGS FOR LOCATIONS, HEIGHT, AND THICKNESS.
13. FOR NON-BEARING INTERIOR METAL STUD DETAILS SEE S9 SERIES.
14. C2, ETC. DENOTE CONCRETE COLUMN TYPE. SEE SHEET S5.00 FOR COLUMN SCHEDULE.
15. MARKS SC1, ETC DENOTE STEEL COLUMN TYPE. SEE SCHEDULE ON SHEET S7.11
16. MARKS F1, ETC. DENOTE SPREAD FOOTING TYPE. SEE SCHDULE ON SHEET S4.01
17. MARKS GB1, ETC. DENOTE GRADE BEAM TYPE. SEE SHEET S4.40 FOR GRADE BEAM SCHEDULE AND DETAILS
18. MARKS S-----S DENOTE STEP IN FOUNDATION. SEE SHEET S4.00.
19. FOR STAIR DETAILS SEE S7.30 & S7.31.
20. FOR ELEVATOR DETAILS SEE S7.40.

AXIS GFA
1130 WESTWOOD BLVD
LOS ANGELES, CA 90024
T 310.209.7520
F 310.209.7516
www.axisgfa.com

PROJECT NAME

Residence Inn® Marriott.

840 KILDARE STREET,
LANCASTER, CA

OWNER:

INSITE REAL STATE DEVELOPMENT
6265 VARIEL AVENUE
WOODLAND HILLS, CA 91367

Thornton Tomasetti
Thornton Tomasetti, Inc.
707 Wilshire Blvd, Suite 4450
Los Angeles, CA 90017-3618
T 213.330.7000 F 213.330.7001

Project Status

REGISTERED PROFESSIONAL ENGINEER
CONRAD A. GANTRI, JR.
No. S4416
Exp. 6/30/18
STRUCTURAL
STATE OF CALIFORNIA

NO.	DATE	ISSUES AND REVISIONS	BY
		10.13.17 DESIGN DEVELOPMENT	
		11.20.17 CD PROGRESS SET	
		12.18.17 PLAN CHECK	
		02.16.18 PLAN CHECK	

DATE

SCALE AS NOTED

PROJECT NUMBER

COMPUTER FILE S17081

PROJECT NAME

DESCRIPTION
FOUNDATION PLAN - A

SHEET NUMBER
S2.01A

ALL DRAWINGS AND WRITTEN MATERIAL APPEARING HEREIN CONSTITUTE ORIGINAL AND UNPUBLISHED WORK OF THE ARCHITECT AND MAY NOT BE DUPLICATED, USED OR DISCLOSED WITHOUT WRITTEN CONSENT OF THE ARCHITECT

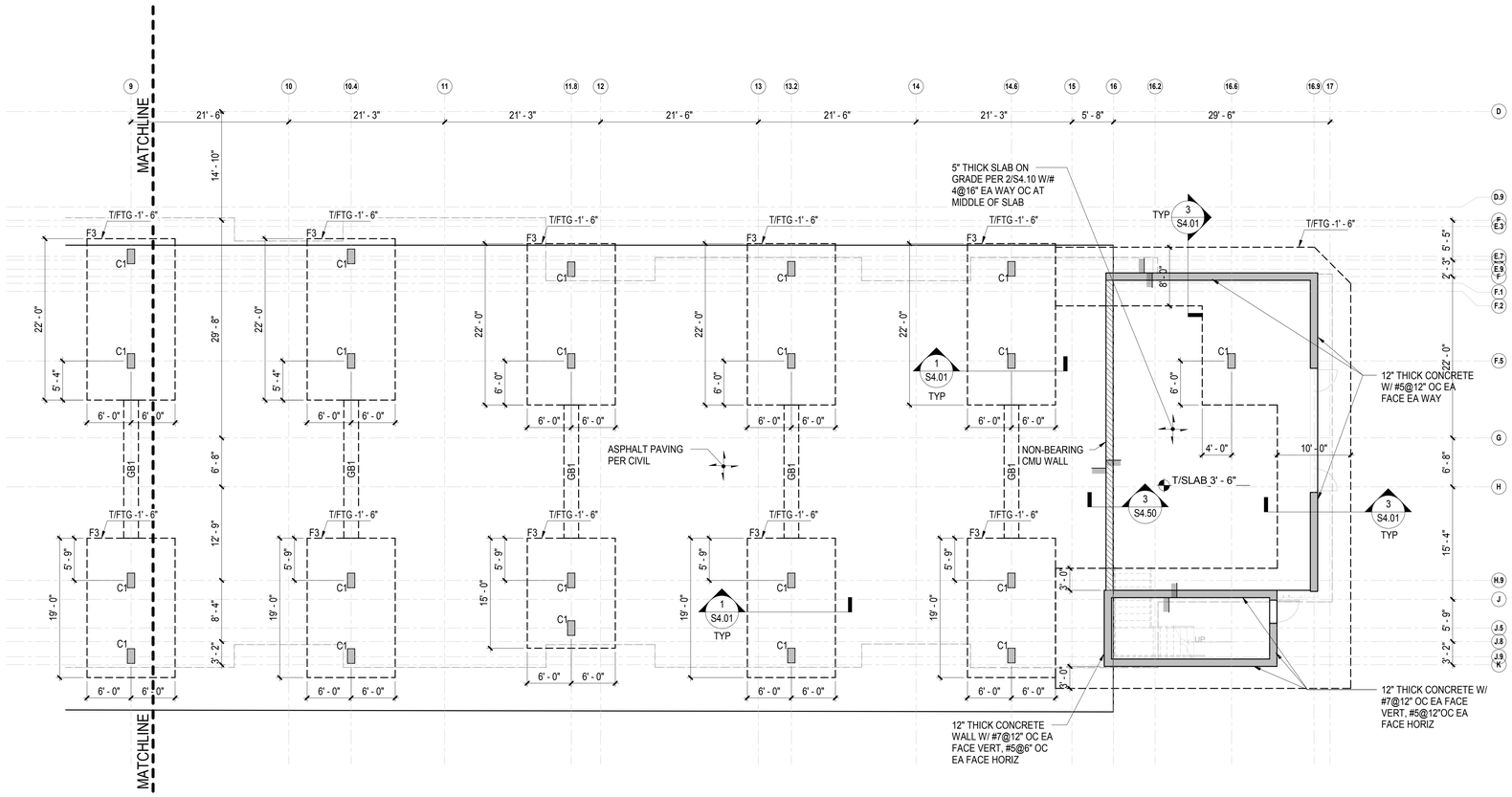

FOUNDATION PLAN NOTES

1. SEE GENERAL NOTES ON SHEETS S0.10 TO S0.11.
2. SEE TYPICAL FOUNDATION AND SLAB ON GRADE DETAILS ON S4 SERIES SHEETS.
3. VERIFY ALL DIMENSIONS AND ELEVATIONS WITH ARCHITECTURAL DRAWINGS
4. FOUNDATION PLAN IS TAKEN ABOVE SLAB-ON-GRADE. NOMINAL TOP OF SLAB ELEVATION IS CALLED OUT IN PLAN. RELATIVE SLAB ELEVATIONS WITH RESPECT TO SLAB REFERENCE ELEVATION ARE SHOWN THUS: [-X'-X"] SEE ARCHTECTURAL DRAWINGS FOR REFERENCE ELEVATIONS.
5. ELEVATIONS OF TOP OF FOOTINGS WITH RESPECT TO SLAB REFERENCE. ELEVATIONS ARE SHOWN THUS: [T/FTG-X'-X"].
6. EXCAVATIONS SHALL BE MADE AS NEAR AS POSSIBLE TO THE NEAT LINES REQUIRED BY THE SIZE AND SHAPE OF THE STRUCTURE. NO MATERIAL IS TO BE EXCAVATED UNNECESSARILY.
7. ALL FOUNDATION EXCAVATIONS MUST BE REVIEWED AND APPROVED BY THE SOILS ENGINEER PRIOR TO PLACEMENT OF CONCRETE.
8. VERIFY LOCATION OF UNDERGROUND UTILITIES BEFORE EXCAVATIONS. NOTIFY ARCHITECT PRIOT TO EXCAVATION IN THE EVENT SUCH UTILITIES ARE ENCOUNTERED.
9. CONTRACTOR SHALL COORDINATE ALL UTILITY PENETRATIONS THROUGH FOOTINGS, CONCRETE WALLS, AND SLABS WITH DETAILS ON SHEET S4.01
10. FOR DRAINAGE DETAILS, SUMPS, PITS, DAMP PROOFING, TRENCHES, CURBS, EXTERIOR WALKS, UTILITIES, EQUIPMENT DETAILS, STEPS, ETC., SEE DRAWINGS OTHER THAN STRUCTURAL.
11. SLAB CONSTRUCTION AND CONTROL JOINT LOCATIONS SHALL BE APPROVED THE THE ARCHITECT PRIOR TO PLACING ANY CONCRETE.
12. CURBS AND DEPRESSIONS ARE SHOWN FOR REFERENCE ONLY. SEE ARCH DWGS FOR LOCATIONS, HEIGHT, AND THICKNESS.
13. FOR NON-BEARING INTERIOR METAL STUD DETAILS SEE S9 SERIES.
14. C2, ETC. DENOTE CONCRETE COLUMN TYPE. SEE SHEET S5.00 FOR COLUMN SCHEDULE.
15. MARKS SC1, ETC DENOTE STEEL COLUMN TYPE. SEE SCHEDULE ON SHEET S7.11
16. MARKS F1, ETC. DENOTE SPREAD FOOTING TYPE. SEE SCHDULE ON SHEET S4.01
17. MARKS GB1, ETC. DENOTE GRADE BEAM TYPE. SEE SHEET S4.40 FOR GRADE BEAM SCHEDULE AND DETAILS
18. MARKS S-----S DENOTE STEP IN FOUNDATION. SEE SHEET S4.00.
19. FOR STAIR DETAILS SEE S7.30 & S7.31.
20. FOR ELEVATOR DETAILS SEE S7.40.

1 FIRST FLOOR FOUNDATION PLAN - B

1/8" = 1'-0"

AXIS GFA

1130 WESTWOOD BLVD
LOS ANGELES, CA 90024
T 310.209.7520
F 310.209.7516
www.axisgfa.com

PROJECT NAME

Residence Inn® Marriott.

840 KILDARE STREET,
LANCASTER, CA

OWNER:

INSITE REAL STATE DEVELOPMENT
6265 VARIEL AVENUE
WOODLAND HILLS, CA 91367

Thornton Tomasetti
Thornton Tomasetti, Inc.
707 Wilshire Blvd, Suite 4450
Los Angeles, CA 90017-3618
T 213.330.7000 F 213.330.7001

Project Status

REGISTERED PROFESSIONAL ENGINEER
CHANDAN GANTRI, ENGINEER
No. S4416
Exp. 6/30/18
STRUCTURAL
STATE OF CALIFORNIA

NO.	DATE	ISSUES AND REVISIONS	BY
		10.13.17 DESIGN DEVELOPMENT	
		11.20.17 CD PROGRESS SET	
		12.18.17 PLAN CHECK	
		02.16.18 PLAN CHECK	

DATE

SCALE AS NOTED

PROJECT NUMBER

COMPUTER FILE **S17081**

PROJECT NAME

DESCRIPTION
FOUNDATION PLAN - B

SHEET NUMBER
S2.01B

ALL DRAWINGS AND WRITTEN MATERIAL APPEARING HEREIN CONSTITUTE ORIGINAL AND UNPUBLISHED WORK OF THE ARCHITECT AND MAY NOT BE DUPLICATED, USED OR DISCLOSED WITHOUT WRITTEN CONSENT OF THE ARCHITECT

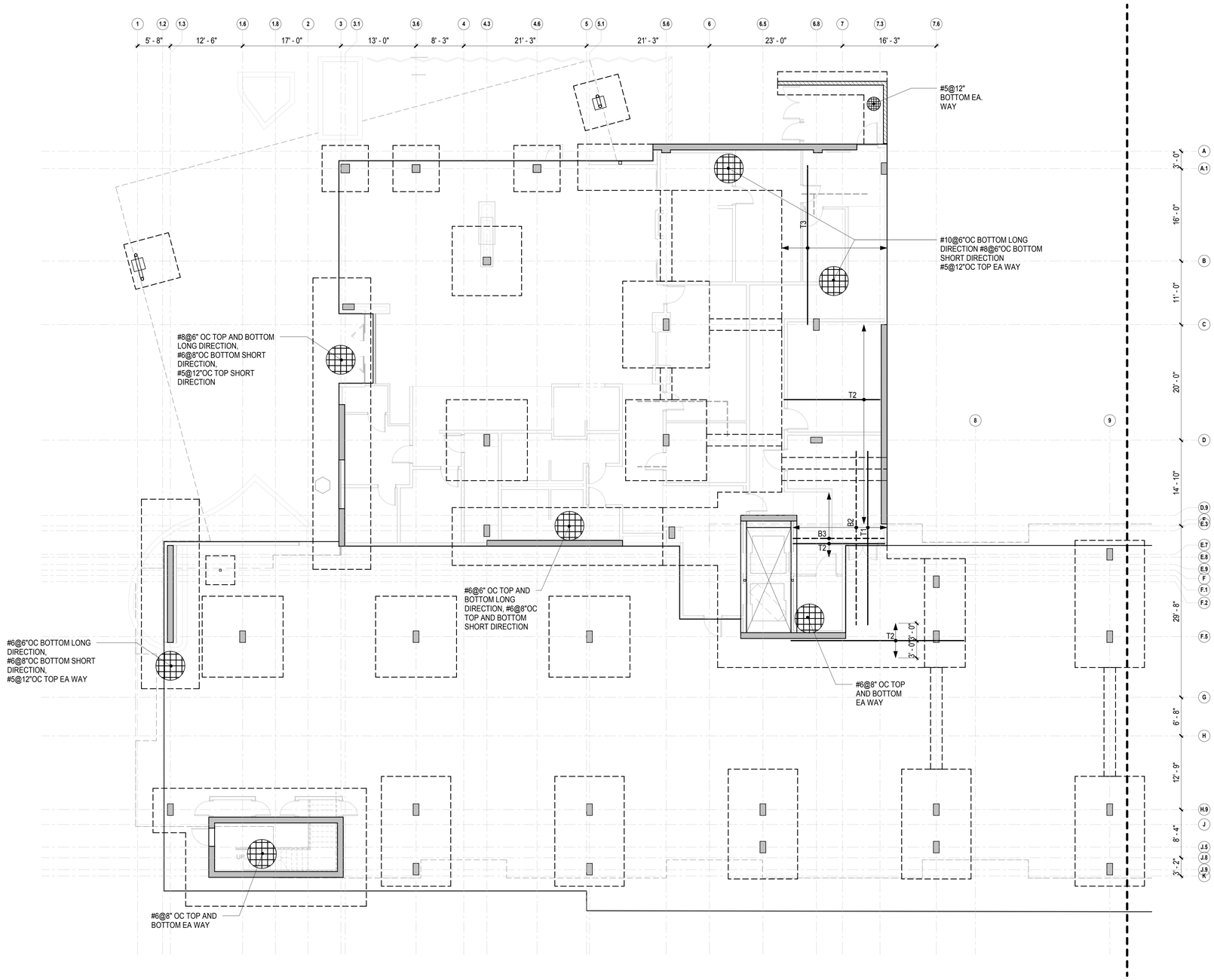

REINFORCEMENT PLAN NOTES:

1. ADDITIONAL BAR SHOWN EXPLICITLY. PLACE ADDITIONAL BARS MIDWAY BETWEEN CONTINUOUS BARS.
2. CENTERLINE OF COLUMN MAY NOT COINCIDE W/ GRIDLINES. REFER TO DRAWINGS FOR OFFSET DIMENSION.
3. LENGTHS OF BARS SHOWN DO NOT INCLUDE HOOKS @ ENDS OF BARS.

BOTTOM REINFORCING SCHEDULE

MARK	REINFORCEMENT	REMARKS
B1	ADD #9X30'-0"@12"	-
B2	ADD #8X30'-0"@12"	-
B3	ADD #8@12"	-
B4	ADD #10X30'-0"@12"	-
B5	ADD 4#8X20'-0"@12"	-

TOP REINFORCING SCHEDULE

MARK	REINFORCEMENT	REMARKS
T1	ADD #8X30'-0"@12"	-
T2	ADD #5@12"	-
T3	ADD #8X20'-0" @ 12"	-

1 FOUNDATION REINFORCING - A

1/8" = 1'-0"

AXIS GFA
1130 WESTWOOD BLVD
LOS ANGELES, CA 90024
T 310.209.7520
F 310.209.7516
www.axisgfa.com

PROJECT NAME

Residence Inn® Marriott.

840 KILDARE STREET,
LANCASTER, CA

OWNER:

INSITE REAL STATE DEVELOPMENT
6265 VARIEL AVENUE
WOODLAND HILLS, CA 91367

Thornton Tomasetti
Thornton Tomasetti, Inc.
707 Wilshire Blvd, Suite 4450
Los Angeles, CA 90017-3618
T 213.330.7000 F 213.330.7001

Project Status

REGISTERED PROFESSIONAL ENGINEER
CHARLES GANTRI
No. S4416
Exp. 6/30/18
STRUCTURAL
STATE OF CALIFORNIA

NO.	DATE	ISSUES AND REVISIONS	BY
		10.13.17 DESIGN DEVELOPMENT	
		11.20.17 CD PROGRESS SET	
		12.18.17 PLAN CHECK	
		02.16.18 PLAN CHECK	

DATE

SCALE AS NOTED

PROJECT NUMBER

COMPUTER FILE S17081

PROJECT NAME

DESCRIPTION
FOUNDATION REINFORCING - A

SHEET NUMBER
S2.01RA

ALL DRAWINGS AND WRITTEN MATERIAL APPEARING HEREIN CONSTITUTE ORIGINAL AND UNPUBLISHED WORK OF THE ARCHITECT AND MAY NOT BE DUPLICATED, USED OR DISCLOSED WITHOUT WRITTEN CONSENT OF THE ARCHITECT

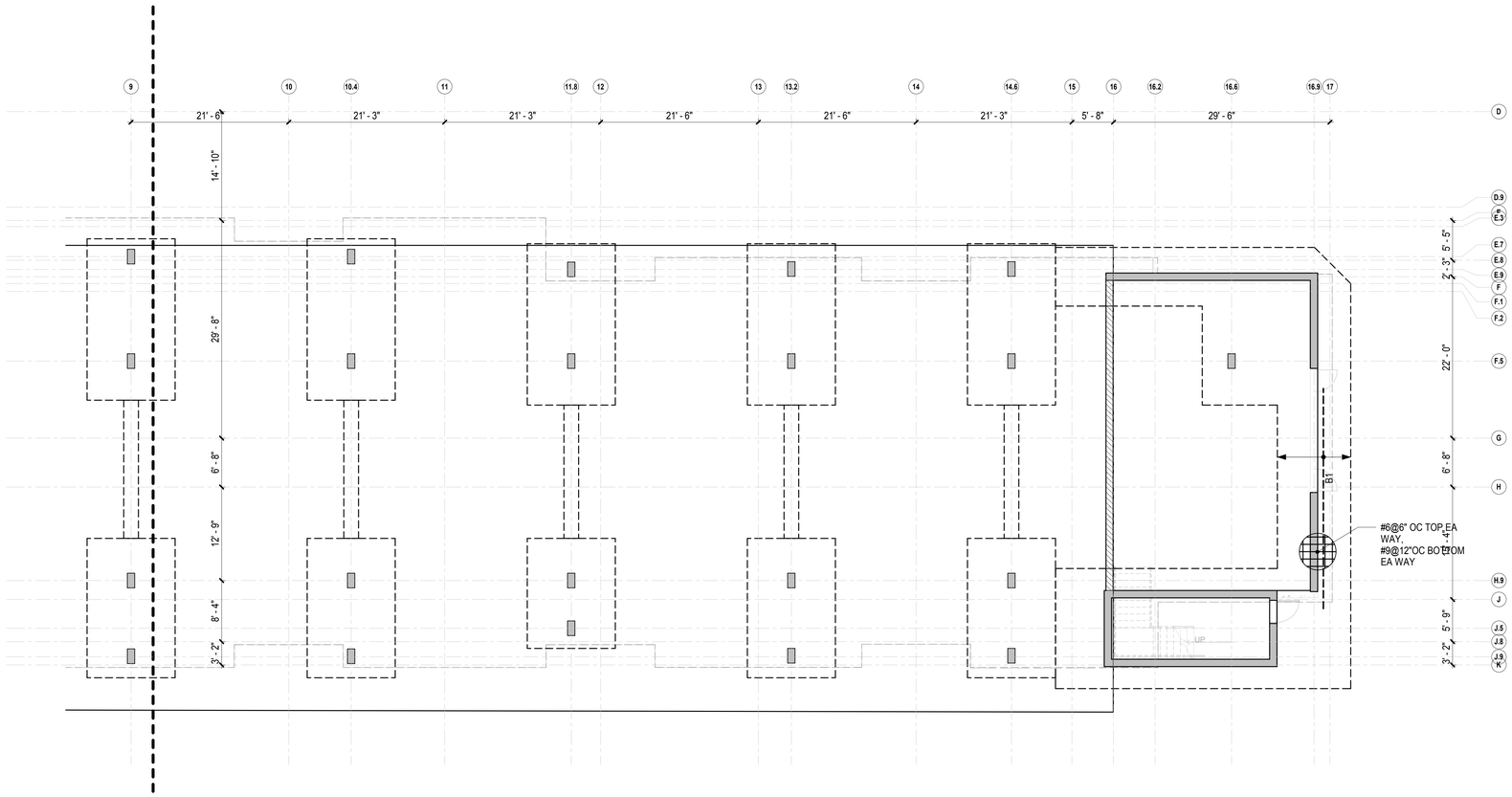

REINFORCEMENT PLAN NOTES:

1. ADDITIONAL BAR SHOWN EXPLICITLY. PLACE ADDITIONAL BARS MIDWAY BETWEEN CONTINUOUS BARS.
2. CENTERLINE OF COLUMN MAY NOT COINCIDE W/ GRIDLINES. REFER TO DRAWINGS FOR OFFSET DIMENSION.
3. LENGTHS OF BARS SHOWN DO NOT INCLUDE HOOKS @ ENDS OF BARS.

BOTTOM REINFORCING SCHEDULE

MARK	REINFORCEMENT	REMARKS
B1	ADD #9X30'-0"@12"	-
B2	ADD #8X30'-0"@12"	-
B3	ADD #8@12"	-
B4	ADD #10X30'-0"@12"	-
B5	ADD 4#8X20'-0"@12"	-

TOP REINFORCING SCHEDULE

MARK	REINFORCEMENT	REMARKS
T1	ADD #8X30'-0"@12"	-
T2	ADD #5@12"	-
T3	ADD #8X20'-0" @ 12"	-

1 **FOUNDATION REINFORCING - B**
1/8" = 1'-0"

AXIS GFA
1130 WESTWOOD BLVD
LOS ANGELES, CA 90024
T 310.209.7520
F 310.209.7516
www.axisgfa.com

PROJECT NAME

Residence Inn® Marriott.

840 KILDARE STREET,
LANCASTER, CA

OWNER:

INSITE REAL STATE
DEVELOPMENT
6265 VARIEL AVENUE
WOODLAND HILLS, CA 91367

Thornton Tomasetti
Thornton Tomasetti, Inc.
707 Wilshire Blvd, Suite 4450
Los Angeles, CA 90017-3618
T 213.330.7000 F 213.330.7001

Project Status

REGISTERED PROFESSIONAL ENGINEER
CHARLES GANTRI
No. S4416
Exp. 6/30/18
STRUCTURAL
STATE OF CALIFORNIA

NO.	DATE	ISSUES AND REVISIONS	BY
	10.13.17	DESIGN DEVELOPMENT	
	11.20.17	CD PROGRESS SET	
	12.18.17	PLAN CHECK	
	02.16.18	PLAN CHECK	

DATE
SCALE AS NOTED
PROJECT NUMBER
COMPUTER FILE S17081
PROJECT NAME

DESCRIPTION
FOUNDATION
REINFORCING - B

SHEET NUMBER
S2.01RB

ALL DRAWINGS AND WRITTEN MATERIAL APPEARING HEREIN CONSTITUTE ORIGINAL AND UNPUBLISHED WORK OF THE ARCHITECT AND MAY NOT BE DUPLICATED, USED OR DISCLOSED WITHOUT WRITTEN CONSENT OF THE ARCHITECT

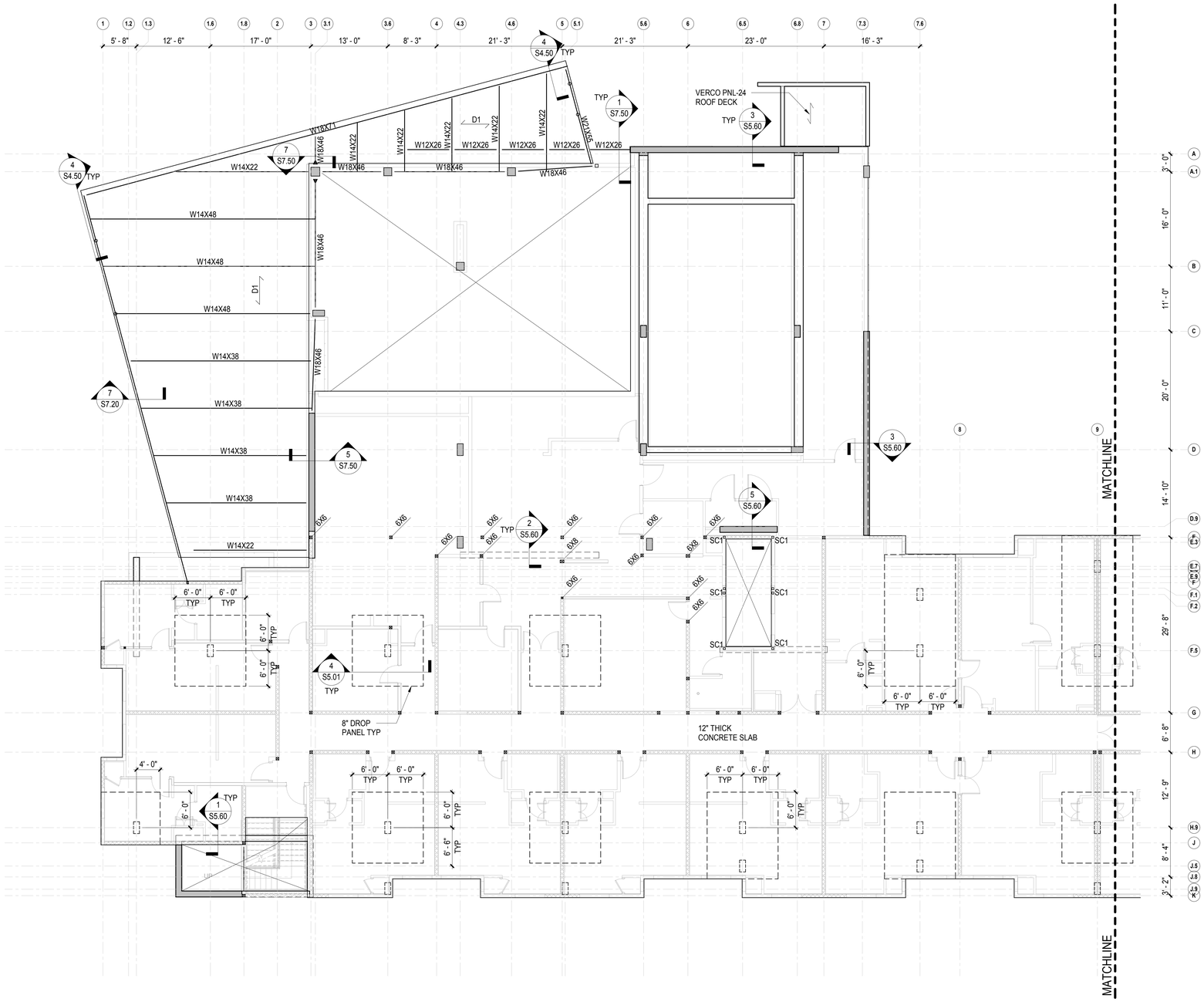

FLOOR FRAMING NOTES

1. SEE GENERAL NOTES ON SHEET S0.10 TO S0.11
2. SEE TYPICAL CONCRETE DETAILS ON SHEET S5 SERIES.
3. VERIFY ALL DIMENSIONS AND ELEVATIONS WITH ARCHITECTURAL DRAWINGS
4. TOP OF SLAB ELEVATION IS CALLED OUT IN PLAN. RELATIVE SLAB ELEVATIONS WITH RESPECT TO SLAB REFERENCE ELEVATION ARE SHOWN THUS: [X'-X"]
5. TOP OF CONCRETE BEAMS ARE FLUSH WITH TOP OF STRUCTURAL SLAB.
6. MARKS "B1" ETC. INDICATE CONCRETE BEAMS. SEE BEAM SCHEDULE ON SHEET S5.30. SEE S5.31 FOR TYPICAL CONCRETE BEAM DETAILS
7. DEPRESSIONS, CURBS AND OPENINGS SHOWN ON THIS PLAN ARE NOT COMPLETE AS TO NUMBER, SIZE, AND LOCATION. FOR COMPLETE INFORMATION, REFER TO DRAWINGS OTHER THAN STRUCTURAL.
8. EDGE OF SLAB LOCATIONS ARE APPROXIMATE, SEE ARCH DWGS FOR EDGE OF SLAB DIMENSIONS.
9. SLAB CAMBER SHOWN THUS: C= "X" SEE DETAIL 3/S5.23. FOR TYPICAL CAMBER WHERE NOT NOTED
10. INDICATES CMU WALL
11. HOLD-DOWN HARDWARE MUST BE SECURED IN PLACE PRIOR TO FOUNDATION INSPECTION
12. SLAB FORMS SHOULD NOT BE REMOVED UNLESS THE SPECIFIED COMPRESSIVE STRENGTH IS REACHED, 28 DAYS HAVE PASSED, AND AN APPROVAL IS OBTAINED FROM THE ENGINEER OF RECORD.
13. INDICATES WOOD SHEAR WALL SEE SHEET S8.40
14. INDICATES WOOD BEARING WALL SEE SHEET S8.30
15. FOR STAIR FRAMING SEE SHEET S8.03
16. FOR ELEVATOR FRAMING SEE S7.40
17. FOR NON-BEARING METAL STUDS SEE S9 SERIES.
18. FOR RAILING SEE SHEET S8.60
19. INDICATES WOOD POST PLACE 6X POST UNDER ALL 6X NOMINAL OR ENGINEERED BEAMS. PLACE 4X POST UNDER ALL 4X NOMINAL OR ENGINEERED BEAMS, UON.
20. INDICATES DEPRESSED SLAB PER ARCH'L
21. D1 DENOTES DECK SPAN DIRECTION AND TYPE PER SCHEDULE ON 3/S7.20
22. MARKS SC1, ETC DENOTE STEEL COLUMN TYPE. SEE SCHEDULE ON SHEET S7.11

1 SECOND FLOOR FRAMING PLAN - A

1/8" = 1'-0"

AXIS GFA
1130 WESTWOOD BLVD
LOS ANGELES, CA 90024
T 310.209.7520
F 310.209.7516
www.axisgfa.com

PROJECT NAME

Residence Inn® Marriott.

840 KILDARE STREET,
LANCASTER, CA

OWNER:

INSITE REAL STATE
DEVELOPMENT
6265 VARIEL AVENUE
WOODLAND HILLS, CA 91367

Thornton Tomasetti
Thornton Tomasetti, Inc.
707 Wilshire Blvd, Suite 4450
Los Angeles, CA 90017-3618
T 213.330.7000 F 213.330.7001

Project Status

REGISTERED PROFESSIONAL ENGINEER
CHARLES GANTRU TAMASHIRO
No. S4416
Exp. 6/30/18
STRUCTURAL
STATE OF CALIFORNIA

NO.	DATE	ISSUES AND REVISIONS	BY
	10.13.17	DESIGN DEVELOPMENT	
	11.20.17	CD PROGRESS SET	
	12.18.17	PLAN CHECK	
	02.16.18	PLAN CHECK	

DATE

SCALE AS NOTED

PROJECT NUMBER

COMPUTER FILE S17081

PROJECT NAME

DESCRIPTION
SECOND FLOOR FRAMING - A

SHEET NUMBER
S2.02A

ALL DRAWINGS AND WRITTEN MATERIAL APPEARING HEREIN CONSTITUTE ORIGINAL AND UNPUBLISHED WORK OF THE ARCHITECT AND MAY NOT BE DUPLICATED, USED OR DISCLOSED WITHOUT WRITTEN CONSENT OF THE ARCHITECT

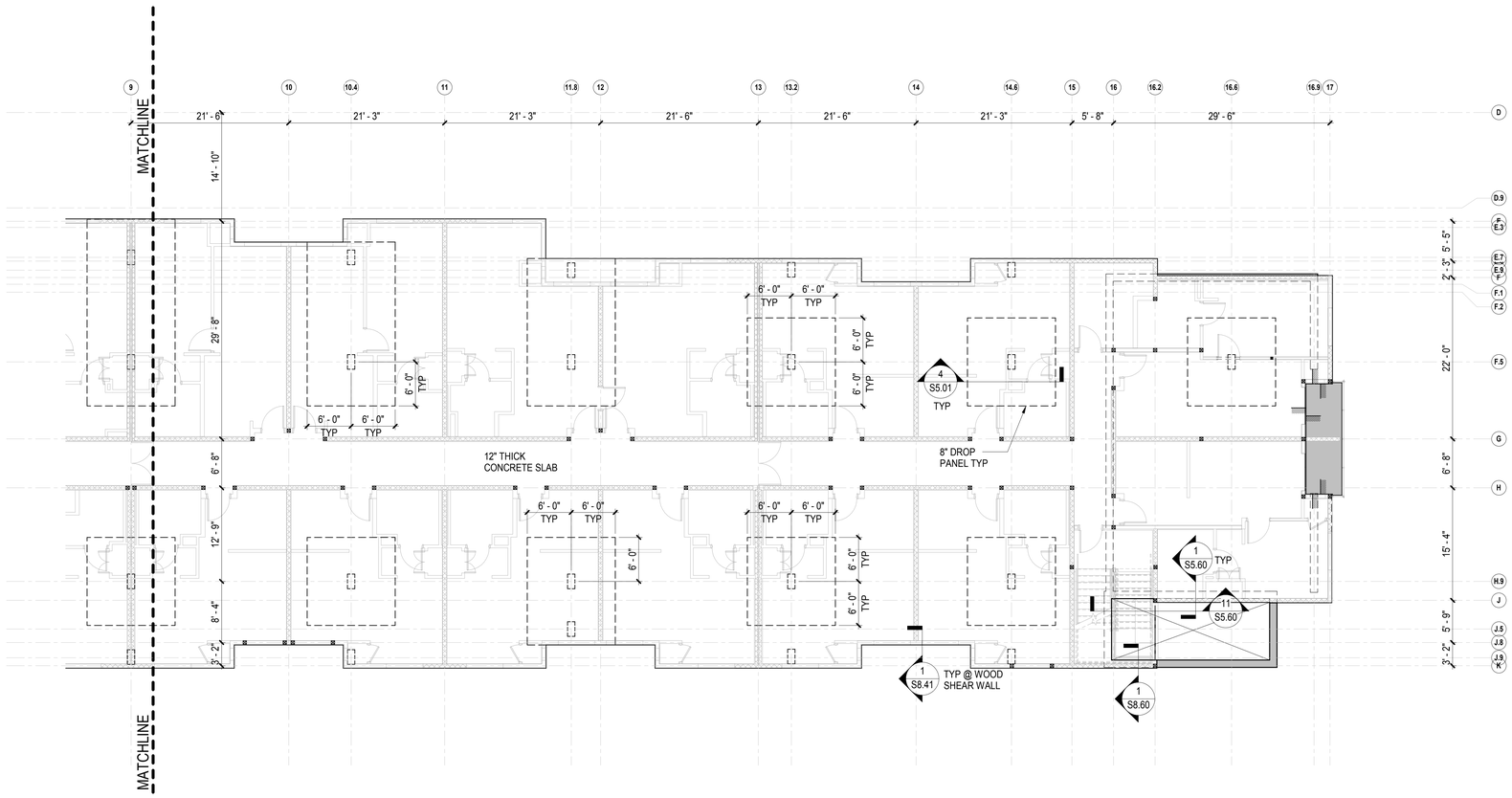

FLOOR FRAMING NOTES

1. SEE GENERAL NOTES ON SHEET S0.10 TO S0.11
2. SEE TYPICAL CONCRETE DETAILS ON SHEET S5 SERIES.
3. VERIFY ALL DIMENSIONS AND ELEVATIONS WITH ARCHITECTURAL DRAWINGS
4. TOP OF SLAB ELEVATION IS CALLED OUT IN PLAN. RELATIVE SLAB ELEVATIONS WITH RESPECT TO SLAB REFERENCE ELEVATION ARE SHOWN THUS: [X'-X"]
5. TOP OF CONCRETE BEAMS ARE FLUSH WITH TOP OF STRUCTURAL SLAB.
6. MARKS "B1" ETC. INDICATE CONCRETE BEAMS. SEE BEAM SCHEDULE ON SHEET S5.30. SEE S5.31 FOR TYPICAL CONCRETE BEAM DETAILS
7. DEPRESSIONS, CURBS AND OPENINGS SHOWN ON THIS PLAN ARE NOT COMPLETE AS TO NUMBER, SIZE, AND LOCATION. FOR COMPLETE INFORMATION, REFER TO DRAWINGS OTHER THAN STRUCTURAL.
8. EDGE OF SLAB LOCATIONS ARE APPROXIMATE, SEE ARCH DWGS FOR EDGE OF SLAB DIMENSIONS.
9. SLAB CAMBER SHOWN THUS: C= "X" SEE DETAIL 3/S5.23. FOR TYPICAL CAMBER WHERE NOT NOTED
10. INDICATES CMU WALL
11. HOLD-DOWN HARDWARE MUST BE SECURED IN PLACE PRIOR TO FOUNDATION INSPECTION
12. SLAB FORMS SHOULD NOT BE REMOVED UNLESS THE SPECIFIED COMPRESSIVE STRENGTH IS REACHED, 28 DAYS HAVE PASSED, AND AN APPROVAL IS OBTAINED FROM THE ENGINEER OF RECORD.
13. INDICATES WOOD SHEAR WALL SEE SHEET S8.40
14. INDICATES WOOD BEARING WALL SEE SHEET S8.30
15. FOR STAIR FRAMING SEE SHEET S8.03
16. FOR ELEVATOR FRAMING SEE S7.40
17. FOR NON-BEARING METAL STUDS SEE S9 SERIES.
18. FOR RAILING SEE SHEET S8.60
19. INDICATES WOOD POST PLACE 6X POST UNDER ALL 6X NOMINAL OR ENGINEERED BEAMS. PLACE 4X POST UNDER ALL 4X NOMINAL OR ENGINEERED BEAMS, UON.
20. INDICATES DEPRESSED SLAB PER ARCH'L
21. D1 DENOTES DECK SPAN DIRECTION AND TYPE PER SCHEDULE ON 3/S7.20
22. MARKS SC1, ETC DENOTE STEEL COLUMN TYPE. SEE SCHEDULE ON SHEET S7.11

1 SECOND FLOOR FRAMING PLAN - B

1/8" = 1'-0"

AXIS GFA

1130 WESTWOOD BLVD
LOS ANGELES, CA 90024
T 310.209.7520
F 310.209.7516
www.axisgfa.com

PROJECT NAME

Residence Inn® Marriott.

840 KILDARE STREET,
LANCASTER, CA

OWNER:

INSITE REAL STATE DEVELOPMENT
6265 VARIEL AVENUE
WOODLAND HILLS, CA 91367

Thornton Tomasetti
Thornton Tomasetti, Inc.
707 Wilshire Blvd, Suite 4450
Los Angeles, CA 90017-3618
T 213.330.7000 F 213.330.7001

Project Status

REGISTERED PROFESSIONAL ENGINEER
EDWARD GANTRI SAKAEDA
No. S4416
Exp. 6/30/18
STRUCTURAL
STATE OF CALIFORNIA

NO.	DATE	ISSUES AND REVISIONS	BY
		10.13.17 DESIGN DEVELOPMENT	
		11.20.17 CD PROGRESS SET	
		12.18.17 PLAN CHECK	
		02.16.18 PLAN CHECK	

DATE

SCALE AS NOTED

PROJECT NUMBER

COMPUTER FILE **S17081**

PROJECT NAME

DESCRIPTION
SECOND FLOOR FRAMING - B

SHEET NUMBER
S2.02B

ALL DRAWINGS AND WRITTEN MATERIAL APPEARING HEREIN CONSTITUTE ORIGINAL AND UNPUBLISHED WORK OF THE ARCHITECT AND MAY NOT BE DUPLICATED, USED OR DISCLOSED WITHOUT WRITTEN CONSENT OF THE ARCHITECT

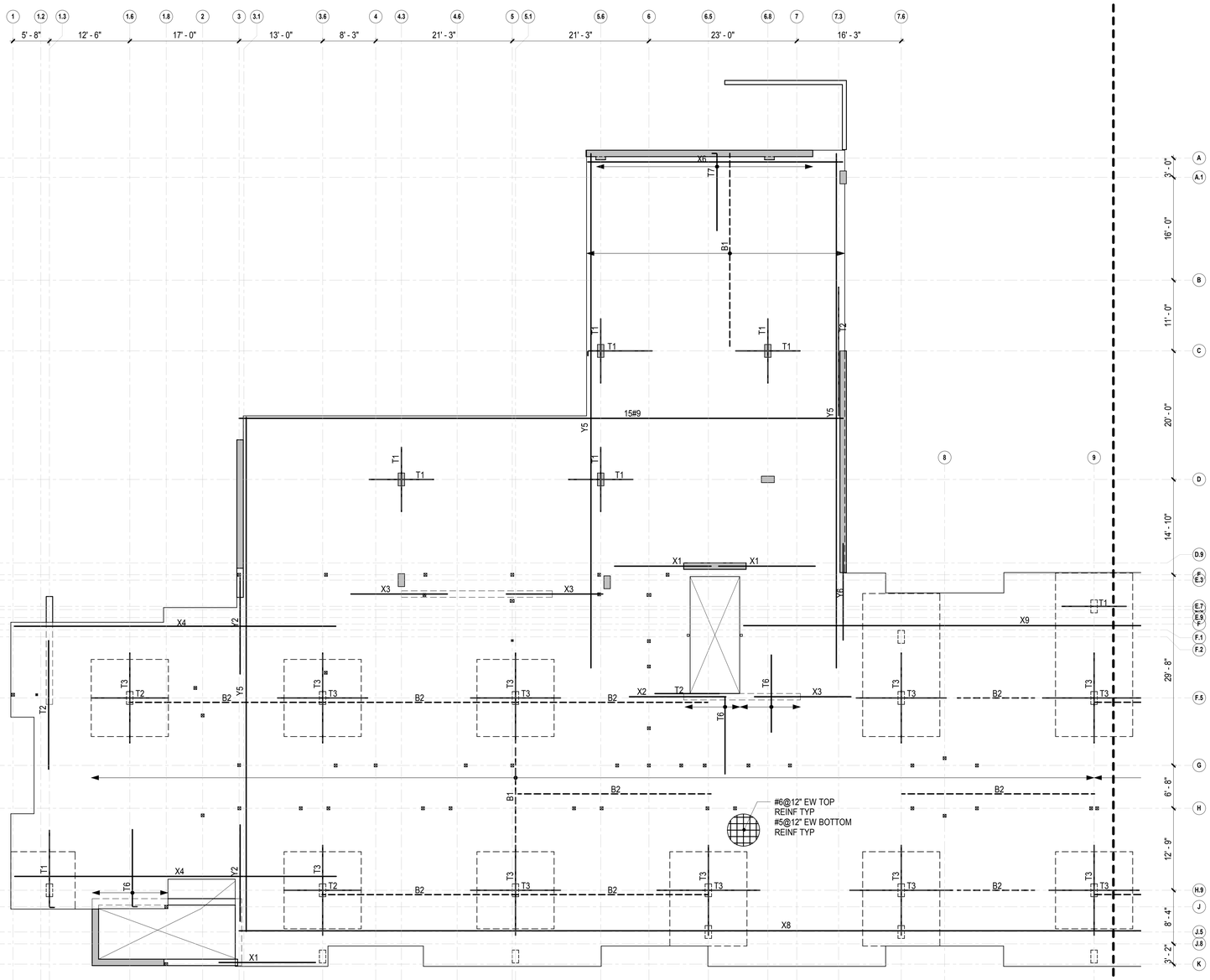

REINFORCEMENT PLAN NOTES

1. SEE S2 SERIES SHEET FOR FRAMING PLAN
2. SLAB BOTTOM BAR CLEAR COVER PER GENERAL NOTES, UON
3. SLAB TOP BAR CLEAR COVER PER GENERAL NOTES.
4. T/SLAB ELEVATION SEE FRAMING PLAN
5. SEE TYPICAL SLAB DETAILS.
6. FOR SLAB CORNERS SUPPORTED BY BEAMS OR WALLS, SEE TYPICAL BEAM / WALL SUPPORTED SLAB EXTERIOR CORNER DETAIL.
7. TWO-WAY SLAB BAR PLACEMENT:
   1. OUTER LAYER PARALLEL TO GRID LINES 1 THRU 17
   2. INNER LAYER PARALLEL TO GRID LINES A THRU K
8. LENGTH OF HOOKED BARS IN REINFORCING SCHEDULE REFERS TO TOTAL UNBENT LENGTH
9. WHERE BARS ARE CALLED OUT AS STAGGER, ALTERNATE BARS THUS:

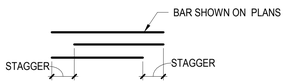

10. SEE SHEET S5.25 FOR PLACEMENT OF REINFORCEMENT UON

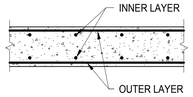

SLAB SECTION

TOP REINFORCING SCHEDULE

MARK	REINFORCEMENT	REMARKS
T1	4#7X20'-0"	-
T2	8#7X20'-0"	-
T3	14#7X20'-0"	-
T4	4#6X10'-0"	-
-	-	-
T6	#7@12"X12'-0"	-
T7	#5@12"X12'-0"	-

BOTTOM REINFORCING SCHEDULE

MARK	REINFORCEMENT	REMARKS
B1	#5@12"X31'-0"	-
B2	4#5X30'-0"	-
X1	1#7X15'-0"	-
X2	3#7X15'-0"	-
X3	5#7X15'-0"	-
X4	3#7X50'-0"	-
X5	5#7X80'-0"	-
X6	5#7X40'-0"	-
X7	6#9X40'-0"	-
X8	15#9X265'-0"	-
X9	15#9X215'-0"	-
X10	10#7X30'-0"	-
Y1	1#7X15'-0"	-
Y2	3#7X15'-0"	-
Y3	5#7X15'-0"	-
Y4	3#7X50'-0"	-
Y5	5#7X80'-0"	-
Y6	6#8X15'-0"	-
Y7	1#8X40'-0"	-
Y8	5#7X66'-0"	-
Y9	5#7X66'-0"	-

1 SECOND FLOOR REINFORCEMENT PLAN - A

1/8" = 1'-0"

AXIS GFA
1130 WESTWOOD BLVD
LOS ANGELES, CA 90024
T 310.209.7520
F 310.209.7516
www.axisgfa.com

PROJECT NAME

Residence Inn® Marriott.

840 KILDARE STREET,
LANCASTER, CA

OWNER:

INSITE REAL STATE
DEVELOPMENT
6265 VARIEL AVENUE
WOODLAND HILLS, CA 91367

Thornton Tomasetti
Thornton Tomasetti, Inc.
707 Wilshire Blvd, Suite 4450
Los Angeles, CA 90017-3618
T 213.330.7000 F 213.330.7001

Project Status

REGISTERED PROFESSIONAL ENGINEER
STANLEY GRINTRIZ
No. S4416
Exp. 6/30/18
STRUCTURAL
STATE OF CALIFORNIA

NO.	DATE	ISSUES AND REVISIONS	BY
		10.13.17 DESIGN DEVELOPMENT	
		11.20.17 CD PROGRESS SET	
		12.18.17 PLAN CHECK	
		02.16.18 PLAN CHECK	

DATE

SCALE AS NOTED

PROJECT NUMBER

COMPUTER FILE S17081

PROJECT NAME

DESCRIPTION
SECOND FLOOR
REINFORCING - A

SHEET NUMBER
S2.02RA

ALL DRAWINGS AND WRITTEN MATERIAL APPEARING HEREIN CONSTITUTE ORIGINAL AND UNPUBLISHED WORK OF THE ARCHITECT AND MAY NOT BE DUPLICATED, USED OR DISCLOSED WITHOUT WRITTEN CONSENT OF THE ARCHITECT

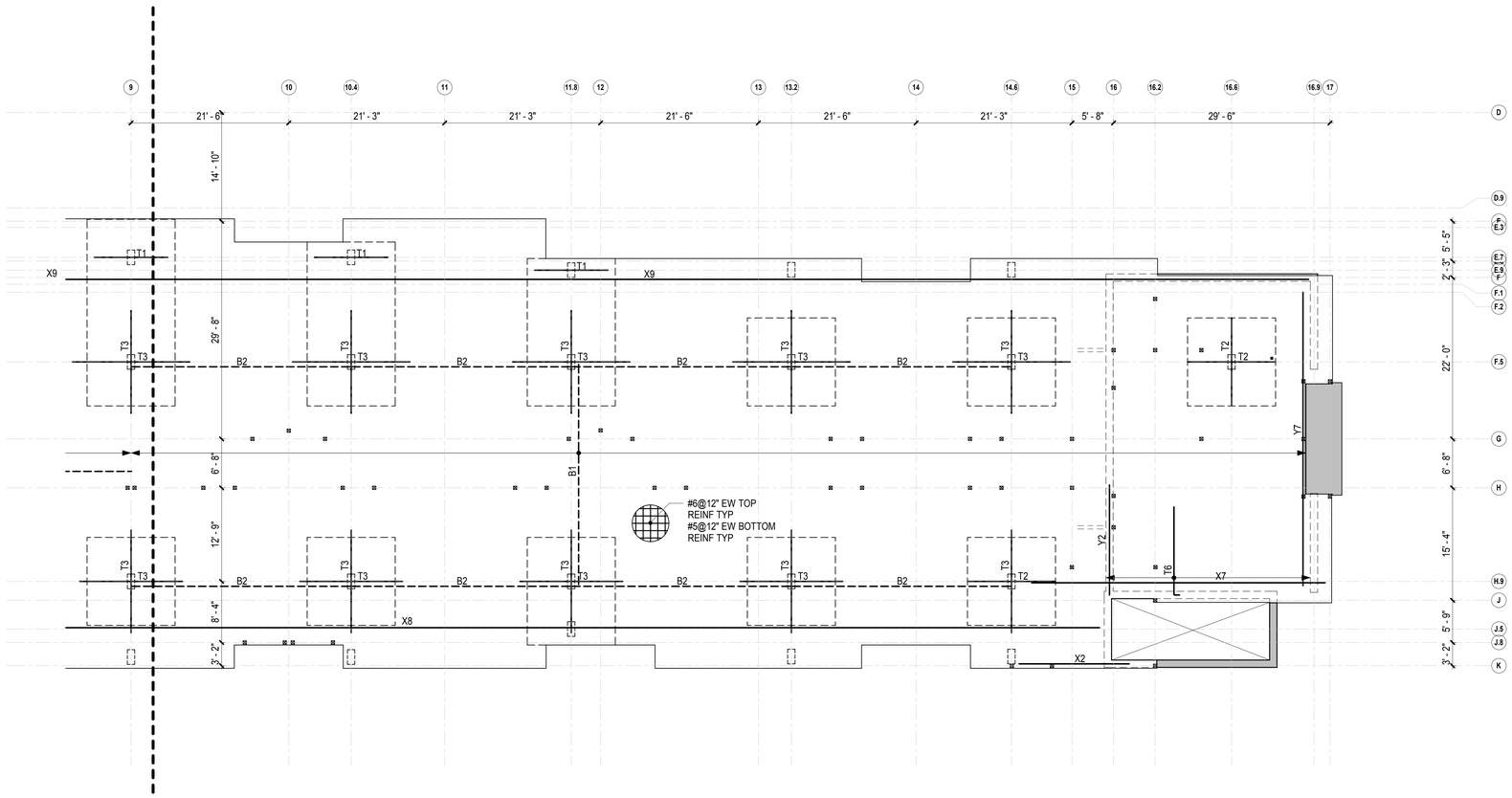

SECOND FLOOR REINFORCEMENT PLAN - B

1 1/8" = 1'-0"

REINFORCEMENT PLAN NOTES

1. SEE S2 SERIES SHEET FOR FRAMING PLAN
2. SLAB BOTTOM BAR CLEAR COVER PER GENERAL NOTES, UON
3. SLAB TOP BAR CLEAR COVER PER GENERAL NOTES.
4. T/SLAB ELEVATION SEE FRAMING PLAN
5. SEE TYPICAL SLAB DETAILS.
6. FOR SLAB CORNERS SUPPORTED BY BEAMS OR WALLS, SEE TYPICAL BEAM / WALL SUPPORTED SLAB EXTERIOR CORNER DETAIL.
7. TWO-WAY SLAB BAR PLACEMENT:
   1. OUTER LAYER PARALLEL TO GRID LINES 1 THRU 17
   2. INNER LAYER PARALLEL TO GRID LINES A THRU K
8. LENGTH OF HOOKED BARS IN REINFORCING SCHEDULE REFERS TO TOTAL UNBENT LENGTH
9. WHERE BARS ARE CALLED OUT AS STAGGER, ALTERNATE BARS THUS:

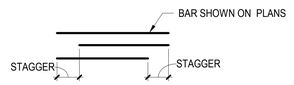

10. SEE SHEET S5.25 FOR PLACEMENT OF REINFORCEMENT UON

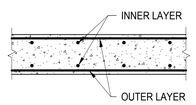

SLAB SECTION

TOP REINFORCING SCHEDULE

MARK	REINFORCEMENT	REMARKS
T1	4#7X20'-0"	-
T2	8#7X20'-0"	-
T3	14#7X20'-0"	-
T4	4#6X10'-0"	-
-	-	-
T6	#7@12"X12'-0"	-
T7	#5@12"X12'-0"	-

BOTTOM REINFORCING SCHEDULE

MARK	REINFORCEMENT	REMARKS
B1	#5@12"X31'-0"	-
B2	4#5X30'-0"	-
X1	1#7X15'-0"	-
X2	3#7X15'-0"	-
X3	5#7X15'-0"	-
X4	3#7X50'-0"	-
X5	5#7X80'-0"	-
X6	5#7X40'-0"	-
X7	6#9X40'-0"	-
X8	15#9X265'-0"	-
X9	15#9X215'-0"	-
X10	10#7X30'-0"	-
Y1	1#7X15'-0"	-
Y2	3#7X15'-0"	-
Y3	5#7X15'-0"	-
Y4	3#7X50'-0"	-
Y5	5#7X80'-0"	-
Y6	6#8X15'-0"	-
Y7	1#8X40'-0"	-
Y8	5#7X66'-0"	-
Y9	5#7X66'-0"	-

AXIS GFA
1130 WESTWOOD BLVD
LOS ANGELES, CA 90024
T 310.209.7520
F 310.209.7516
www.axisgfa.com

PROJECT NAME

Residence Inn® Marriott.

840 KILDARE STREET,
LANCASTER, CA

OWNER:

INSITE REAL STATE
DEVELOPMENT
6265 VARIEL AVENUE
WOODLAND HILLS, CA 91367

Thornton Tomasetti
Thornton Tomasetti, Inc.
707 Wilshire Blvd, Suite 4450
Los Angeles, CA 90017-3618
T 213.330.7000 F 213.330.7001

Project Status

REGISTERED PROFESSIONAL ENGINEER
CLAUDIAN GANTRU TAGALAN
No. S4416
Exp. 6/30/18
STRUCTURAL
STATE OF CALIFORNIA

NO.	DATE	ISSUES AND REVISIONS	BY
		10.13.17 DESIGN DEVELOPMENT	
		11.20.17 CD PROGRESS SET	
		12.18.17 PLAN CHECK	
		02.16.18 PLAN CHECK	

DATE

SCALE AS NOTED

PROJECT NUMBER

COMPUTER FILE **S17081**

PROJECT NAME

DESCRIPTION
SECOND FLOOR
REINFORCING - B

SHEET NUMBER
S2.02RB

ALL DRAWINGS AND WRITTEN MATERIAL APPEARING HEREIN CONSTITUTE ORIGINAL AND UNPUBLISHED WORK OF THE ARCHITECT AND MAY NOT BE DUPLICATED, USED OR DISCLOSED WITHOUT WRITTEN CONSENT OF THE ARCHITECT

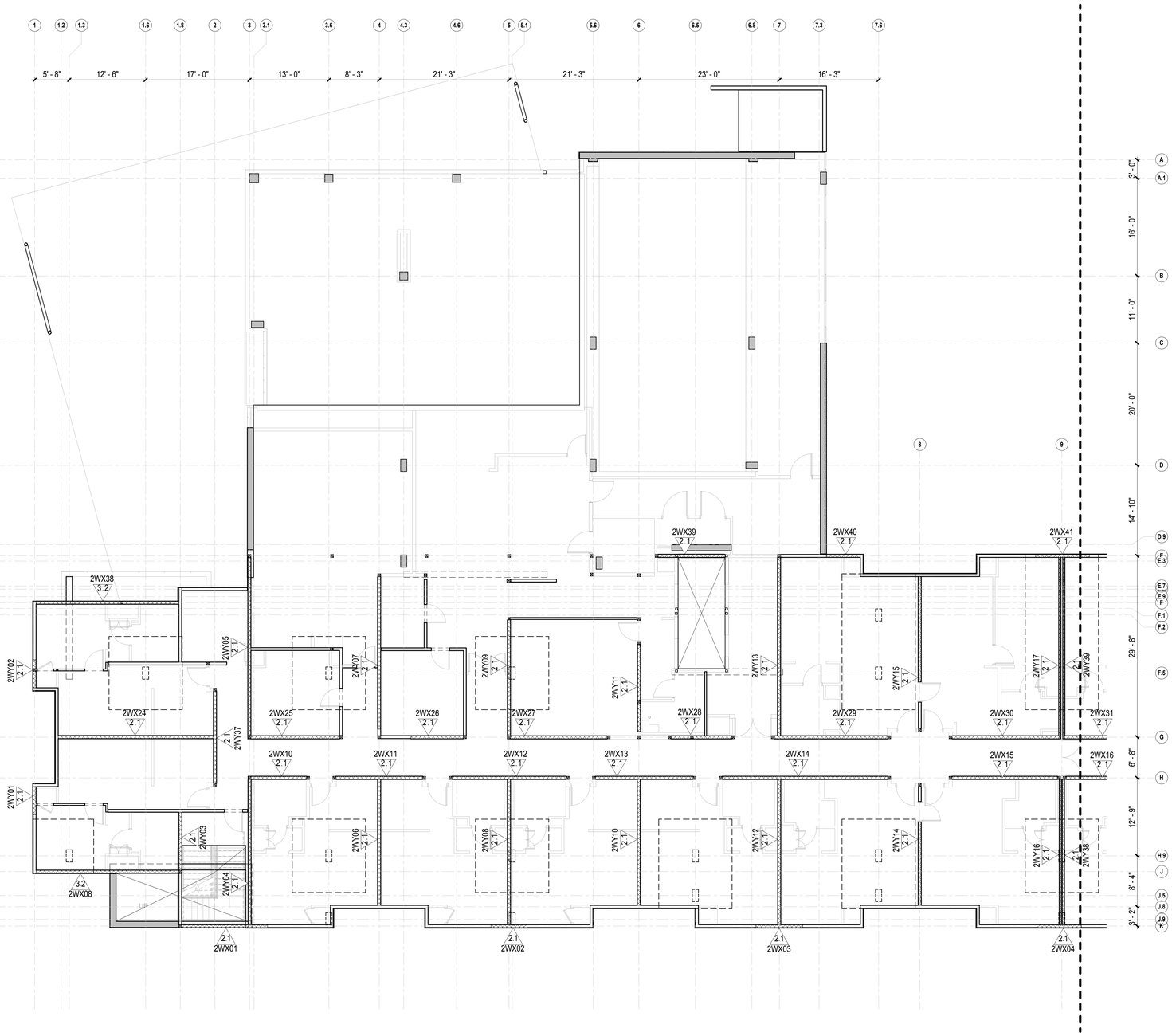

SHEAR WALL PLAN NOTES

1. VERIFY ALL DIMENSIONS AND ELEVATIONS WITH ARCHITECTURAL DRAWINGS.
2. FLOOR SHEATHING SHALL BE TYPE 2. SEE 8/S8.00 FOR SCHEDULE. FOR PLYWOOD PROPERTIES SEE GENERAL NOTES.
3. 1Y01 2.2/7 INDICATES PLYWOOD SHEAR WALL WITH POSTS AND CONTINUOUS TIE-ROD ASSEMBLY EACH END PER SHEETS S8.40 & S8.41
4. WHERE A SHEAR PANEL IS SHOWN AS PORTION OF A WALL THE REMAINDER OF THE WALL (INCLUDING ABOVE AND BELOW OPENINGS, PARAPETS, ETC.) SHALL BE SHEATHED WITH THE SAME SHEATHING AND NAILING SCHEDULE ALONG THE ENTIRE WALL . IN ADDITION, CORNERS OF ALL OPENINGS IN SHEAR WALL SHALL BE STRAPPED PER DETAIL 3/S8.40
5. ALL SHEAR WALLS, FLOOR SHEATHING AND SHEAR TRANSFER NAILS SHALL BE COMMON WIRE NAILS. SINKER AND BOX NAILS AR NOT PERMITTED.
6. TIE-DOWN CONNECTORS SHALL BE TIGHTENED JUST PRIOR TO COVERING THE WALL FRAMING.
7. CONTRACTOR TO NOTIFY THE ARCHITECT AND ENGINEER OF RECORD WHEN PLUMBING LINES OR MECHANICAL DUCTS INTERRUPT DOBULE TOP PLATES.
8. HOLES AND NOTCHES IN FRAMING MEMBERS ARE ONLY PERMITTED PER THE BUILDING CODE AND SHEET S8.01 ANY OVERSIZED HOLE OR NOTCH IN A MEMBER WILL RESULT IN REPLACING THAT MEMBER AT CONTRACTOR'S EXPENSE.
9. FOR DETAIL OF SHEAR WALL CORNERS AND INTERSECTIONS SEE DETAIL 1/S8.43
10. TOP PLATE SPLICE ALONG ALL SHEAR WALLS SHALL BE PER DETAIL 5A/S8.01 MINIMUM, UNO.
11. MST_ DENOTES SIMPSON MST STRAP UNO ON PLAN LARR 25713
12. CS__ DENOTES SIMPSON CS STRAP UNO ON PLAN LARR 25713
13. _ _ _ _ DENOTES BLK'G FOR STRAP MIN LENGTH REQUIRED PER PLAN
14. HOLD-DOWN CONNECTOR BOLTS INTO WOOD FRAMING REQUIRE APPROVED PLATE WASHERS; AND HOLD-DOWNS SHALL BE FINGER TIGHT AND ½ WRENCH TURN JUST PRIOR TO COVERING THE WALL FRAMING. CONNECTOR BOLTS INTO WOOD FRAMING REQUIRE STEEL PLATE WASHERS ON THE POST ON THE OPPOSITE SIDE OF THE ANCHORAGE DEVICE. PLATE SIZE SHALL BE A MINIMUM OF .299 INCH BY 3 INCHES BY 3 INCHES.
15. ROOF DIAPHRAGM NAILING TO BE INSPECTED BEFORE COVERING. FACE GRAIN OF PLYWOOD SHALL BE PERPENDICULAR TO SUPPORTS. FLOOR SHALL HAVE BLOCKED PANEL EDGES. PLYWOOD SPANS SHALL CONFORM WITH TABLE 2304.7
16. ALL DIAPHRAGM AND SHEAR WALL NAILING SHALL UTILIZE COMMON NAILS OR GALVANIZED BOX.
17. ALL BOLT HOLES SHALL BE DRILLED 1/32" OR 1/16" OVERSIZED.

1 **SECOND FLOOR SHEAR WALL PLAN - A**
1/8" = 1'-0"

AXIS GFA
1130 WESTWOOD BLVD
LOS ANGELES, CA 90024
T 310.209.7520
F 310.209.7516
www.axisgfa.com

PROJECT NAME

Residence Inn® Marriott.

840 KILDARE STREET,
LANCASTER, CA

OWNER:

INSITE REAL STATE DEVELOPMENT
6265 VARIEL AVENUE
WOODLAND HILLS, CA 91367

Thornton Tomasetti
Thornton Tomasetti, Inc.
707 Wilshire Blvd, Suite 4450
Los Angeles, CA 90017-3618
T 213.330.7000 F 213.330.7001

Project Status

REGISTERED PROFESSIONAL ENGINEER
GARRY GANIRU TAVAKOLI
No. S4416
Exp. 6/30/18
STRUCTURAL
STATE OF CALIFORNIA

NO.	DATE	ISSUES AND REVISIONS	BY
	10.13.17	DESIGN DEVELOPMENT	
	11.20.17	CD PROGRESS SET	
	12.18.17	PLAN CHECK	
	02.16.18	PLAN CHECK	

DATE

SCALE AS NOTED

PROJECT NUMBER

COMPUTER FILE S17081

PROJECT NAME

DESCRIPTION
SECOND FLOOR SHEAR WALL PLAN - A

SHEET NUMBER
S2.02SWA

ALL DRAWINGS AND WRITTEN MATERIAL APPEARING HEREIN CONSTITUTE ORIGINAL AND UNPUBLISHED WORK OF THE ARCHITECT AND MAY NOT BE DUPLICATED, USED OR DISCLOSED WITHOUT WRITTEN CONSENT OF THE ARCHITECT

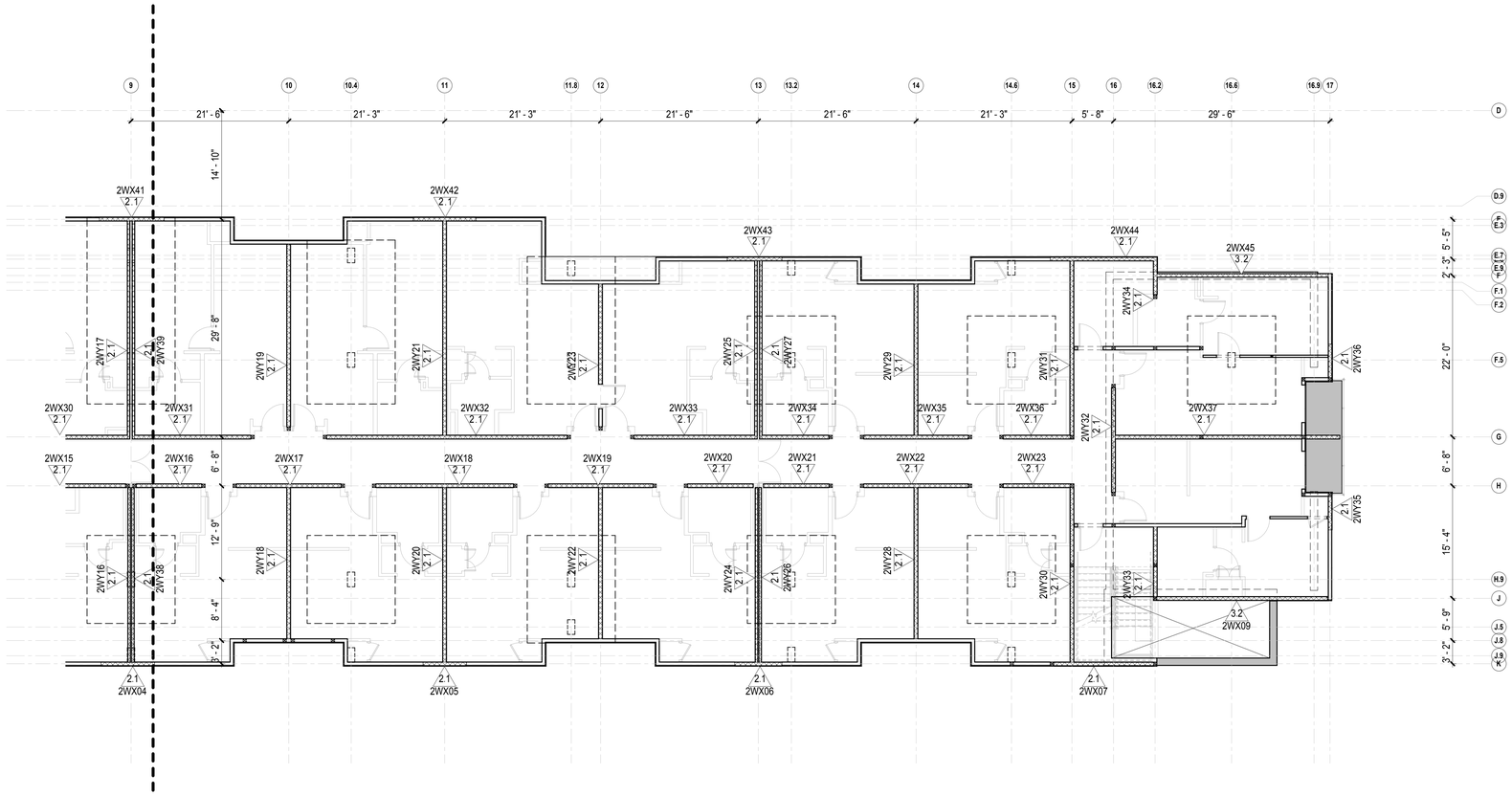

SHEAR WALL PLAN NOTES

1. VERIFY ALL DIMENSIONS AND ELEVATIONS WITH ARCHITECTURAL DRAWINGS.
2. FLOOR SHEATHING SHALL BE TYPE 2. SEE 8/S8.00 FOR SCHEDULE. FOR PLYWOOD PROPERTIES SEE GENERAL NOTES.
3. 1Y01 / 12.2 INDICATES PLYWOOD SHEAR WALL WITH POSTS AND CONTINUOUS TIE-ROD ASSEMBLY EACH END PER SHEETS S8.40 & S8.41
4. WHERE A SHEAR PANEL IS SHOWN AS PORTION OF A WALL THE REMAINDER OF THE WALL (INCLUDING ABOVE AND BELOW OPENINGS, PARAPETS, ETC.) SHALL BE SHEATHED WITH THE SAME SHEATHING AND NAILING SCHEDULE ALONG THE ENTIRE WALL . IN ADDITION, CORNERS OF ALL OPENINGS IN SHEAR WALL SHALL BE STRAPPED PER DETAIL 3/S8.40
5. ALL SHEAR WALLS, FLOOR SHEATHING AND SHEAR TRANSFER NAILS SHALL BE COMMON WIRE NAILS. SINKER AND BOX NAILS AR NOT PERMITTED.
6. TIE-DOWN CONNECTORS SHALL BE TIGHTENED JUST PRIOR TO COVERING THE WALL FRAMING.
7. CONTRACTOR TO NOTIFY THE ARCHITECT AND ENGINEER OF RECORD WHEN PLUMBING LINES OR MECHANICAL DUCTS INTERRUPT DOBULE TOP PLATES.
8. HOLES AND NOTCHES IN FRAMING MEMBERS ARE ONLY PERMITTED PER THE BUILDING CODE AND SHEET S8.01 ANY OVERSIZED HOLE OR NOTCH IN A MEMBER WILL RESULT IN REPLACING THAT MEMBER AT CONTRACTOR'S EXPENSE.
9. FOR DETAIL OF SHEAR WALL CORNERS AND INTERSECTIONS SEE DETAIL 1/S8.43
10. TOP PLATE SPLICE ALONG ALL SHEAR WALLS SHALL BE PER DETAIL 5A/S8.01 MINIMUM, UNO.
11. MST DENOTES SIMPSON MST STRAP UNO ON PLAN LARR 25713
12. CS DENOTES SIMPSON CS STRAP UNO ON PLAN LARR 25713
13. ____ DENOTES BLK'G FOR STRAP MIN LENGTH REQUIRED PER PLAN
14. HOLD-DOWN CONNECTOR BOLTS INTO WOOD FRAMING REQUIRE APPROVED PLATE WASHERS; AND HOLD-DOWNS SHALL BE FINGER TIGHT AND ½ WRENCH TURN JUST PRIOR TO COVERING THE WALL FRAMING. CONNECTOR BOLTS INTO WOOD FRAMING REQUIRE STEEL PLATE WASHERS ON THE POST ON THE OPPOSITE SIDE OF THE ANCHORAGE DEVICE. PLATE SIZE SHALL BE A MINIMUM OF .299 INCH BY 3 INCHES BY 3 INCHES.
15. ROOF DIAPHRAGM NAILING TO BE INSPECTED BEFORE COVERING. FACE GRAIN OF PLYWOOD SHALL BE PERPENDICULAR TO SUPPORTS. FLOOR SHALL HAVE BLOCKED PANEL EDGES. PLYWOOD SPANS SHALL CONFORM WITH TABLE 2304.7
16. ALL DIAPHRAGM AND SHEAR WALL NAILING SHALL UTILIZE COMMON NAILS OR GALVANIZED BOX.
17. ALL BOLT HOLES SHALL BE DRILLED 1/32" OR 1/16" OVERSIZED.

1 SECOND FLOOR SHEAR WALL PLAN - B

1/8" = 1'-0"

AXIS GFA

1130 WESTWOOD BLVD
LOS ANGELES, CA 90024
T 310.209.7520
F 310.209.7516
www.axisgfa.com

PROJECT NAME

Residence Inn® Marriott.

840 KILDARE STREET,
LANCASTER, CA

OWNER:

INSITE REAL STATE
DEVELOPMENT
6265 VARIEL AVENUE
WOODLAND HILLS, CA 91367

Thornton Tomasetti
Thornton Tomasetti, Inc.
707 Wilshire Blvd, Suite 4450
Los Angeles, CA 90017-3618
T 213.330.7000 F 213.330.7001

Project Status

REGISTERED PROFESSIONAL ENGINEER
CHANDRA GANTRU TAMASEB
No. S4416
Exp. 6/30/18
STRUCTURAL
STATE OF CALIFORNIA

NO.	DATE	ISSUES AND REVISIONS	BY
	10.13.17	DESIGN DEVELOPMENT	
	11.20.17	CD PROGRESS SET	
	12.18.17	PLAN CHECK	
	02.16.18	PLAN CHECK	

DATE

SCALE AS NOTED

PROJECT NUMBER

COMPUTER FILE **S17081**

PROJECT NAME

DESCRIPTION
SECOND FLOOR SHEAR WALL PLAN - B

SHEET NUMBER
S2.02SWB

ALL DRAWINGS AND WRITTEN MATERIAL APPEARING HEREIN CONSTITUTE ORIGINAL AND UNPUBLISHED WORK OF THE ARCHITECT AND MAY NOT BE DUPLICATED, USED OR DISCLOSED WITHOUT WRITTEN CONSENT OF THE ARCHITECT

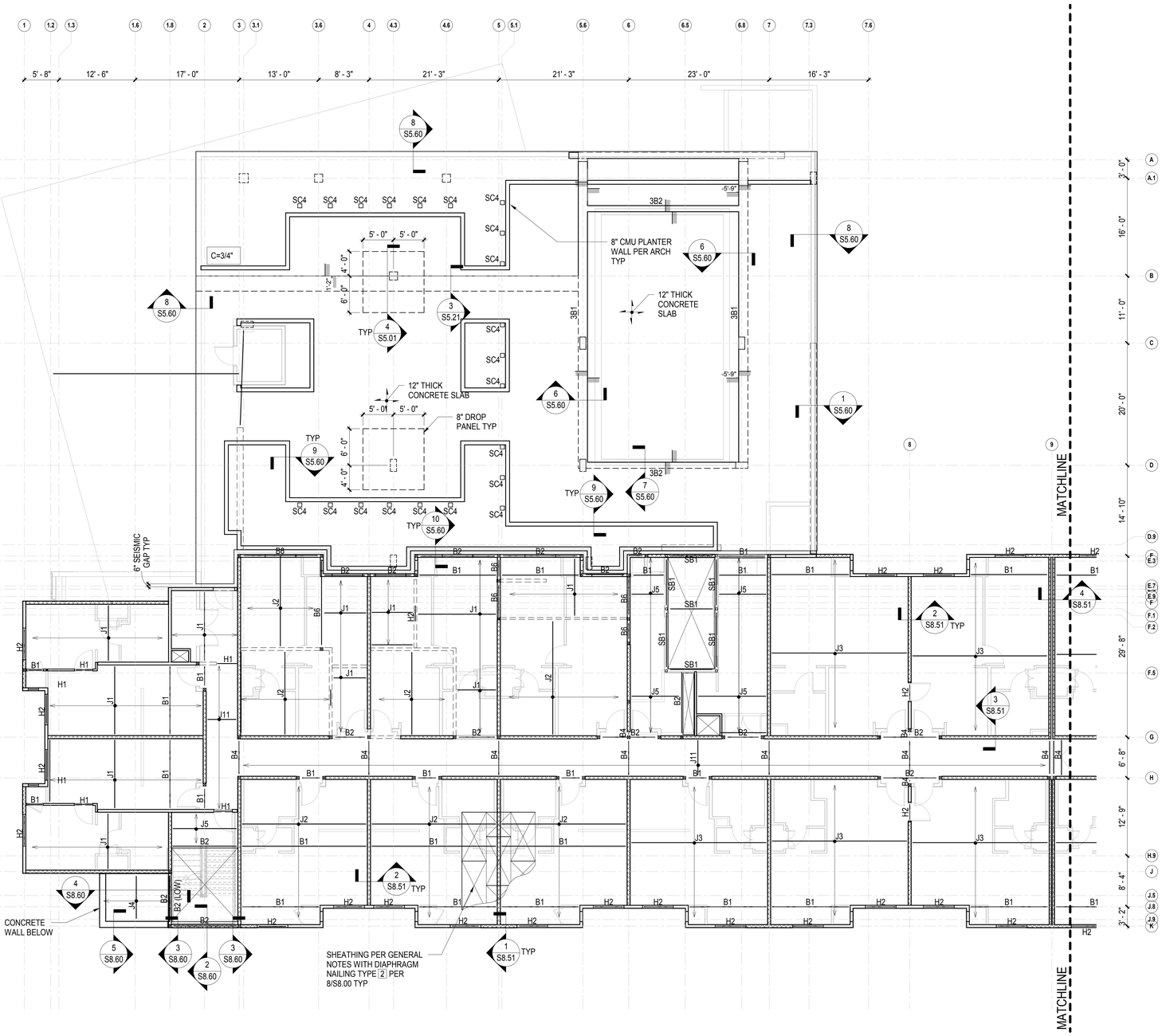

1 THIRD FLOOR FRAMING PLAN - A

1/8" = 1'-0"

BEAM SCHEDULE	
B1	3 1/2X11 7/8 PSL
B2	5 1/4X11 7/8 PSL
B3	6X12
B4	4X8
B5	6X10
B6	7X11 7/8 PSL
SB1	HSS6X4X3/8

FLOOR FRAMING NOTES

1. SEE GENERAL NOTES ON SHEET S0.10 AND S0.11.
2. SEE TYPICAL CONCRETE DETAILS ON SHEET S5 SERIES.
3. VERIFY ALL DIMENSIONS AND ELEVATIONS WITH ARCHITECTURAL DRAWINGS
4. TOP OF SLAB ELEVATION IS CALLED OUT IN PLAN. RELATIVE SLAB ELEVATIONS WITH RESPECT TO SLAB REFERENCE ELEVATION ARE SHOWN THUS.
5. TOP OF STEEL BEAMS ARE SHOWN THUS: ON PLAN. ELEVATIONS SHOWN ARE GIVEN WITH REFERENCE TO NOMINAL FLOOR LINE.
6. DEPRESSIONS, CURBS AND OPENINGS SHOWN ON THIS PLAN ARE NOT COMPLETE AS TO NUMBER, SIZE, AND LOCATION. FOR COMPLETE INFORMATION, REFER TO DRAWINGS OTHER THAN STRUCTURAL.
7. EDGE OF SLAB LOCATIONS ARE APPROXIMATE, SEE ARCH DWGS FOR EDGE OF SLAB DIMENSIONS.
8. TOP OF CONCRETE BEAMS ARE FLUSH WITH TOP OF STRUCTURAL SLAB.
9. MARKS "B1" ETC INDICATE CONCRETE BEAMS. SEE BEAM SCHEDULE ON SHEET S5.40. SEE S5.41 FOR TYPICAL CONCRETE BEAM DETAILS
10. SLAB CAMBER SHOWN THUS: C="X" SEE DETAIL 3/S5.23. PROVIDE CAMBER PER 3/S5.23 UON
11. WALLS SHOWN ON PLAN ARE WALLS ABOVE. WALLS DASHED ARE WALLS BELOW. SEE WALL ELEVATION KEY.
12. FLOOR SHEATHING SHALL BE TYPE 2. SEE 8/S8.00 FOR SCHEDULE FOR PLYWOOD PROPERTIES SEE GENERAL NOTES.
13. ALL DIAPHRAGM, SHEAR WALL, AND SHEAR TRANSFER NAILING SHALL UTILIZE COMMON OR GALVANIZED BOX NAILS.
14. ALL BOLT HOLES SHALL BE DRILLED TO 1/32" OR 1/16" OVERSIZED.
15. ⊠ INDICATES WOOD POST PLACE 6X POST UNDER ALL 6X NOMINAL OR ENGINEERED BEAMS. PLACE 4X POST UNDER ALL 4X NOMINAL OR ENGINEERED BEAMS, UON.
16. HOLDOWN CONNECTIONS SHALL BE TIGHTENED JUST PRIOR TO COVERING THE WALL FRAMING.
17. FOR ADDITIONAL BEAMS SEE SHEAR WALL PLAN.
18. FOR STAIR DETAILS SEE S7.30, S7.31 AND S8.03.
19. FOR ELEVATOR DETAILS SEE S7.40.
20. ▭ INDICATES DEPRESSED SLAB PER ARCH'L
21. ▭ INDICATES WOOD SHEAR WALL. SEE S8.40
22. ▭ INDICATES WOOD BEARING WALL. SEE S8.30
23. MARKS J1, ETC DENOTE JOISTS PER 4/S8.20
24. MARKS H1, ETC DENOTE HEADERS PER DETAIL 4/S8.30

AXIS GFA

1130 WESTWOOD BLVD
LOS ANGELES, CA 90024
T 310.209.7520
F 310.209.7516
www.axisgfa.com

PROJECT NAME

Residence Inn® Marriott.

840 KILDARE STREET,
LANCASTER, CA

OWNER:

INSITE REAL STATE DEVELOPMENT
6265 VARIEL AVENUE
WOODLAND HILLS, CA 91367

Thornton Tomasetti
Thornton Tomasetti, Inc.
707 Wilshire Blvd, Suite 4450
Los Angeles, CA 90017-3618
T 213.330.7000 F 213.330.7001

Project Status

REGISTERED PROFESSIONAL ENGINEER
CHARLES GANTRU TAMASHIRO
No. S4416
Exp. 6/30/18
STRUCTURAL
STATE OF CALIFORNIA

NO.	DATE	ISSUES AND REVISIONS	BY
	10.13.17	DESIGN DEVELOPMENT	
	11.20.17	CD PROGRESS SET	
	12.18.17	PLAN CHECK	
	02.16.18	PLAN CHECK	

DATE

SCALE AS NOTED

PROJECT NUMBER

COMPUTER FILE S17081

PROJECT NAME

DESCRIPTION
THIRD FLOOR FRAMING PLAN - A

SHEET NUMBER
S2.03A

ALL DRAWINGS AND WRITTEN MATERIAL APPEARING HEREIN CONSTITUTE ORIGINAL AND UNPUBLISHED WORK OF THE ARCHITECT AND MAY NOT BE DUPLICATED, USED OR DISCLOSED WITHOUT WRITTEN CONSENT OF THE ARCHITECT

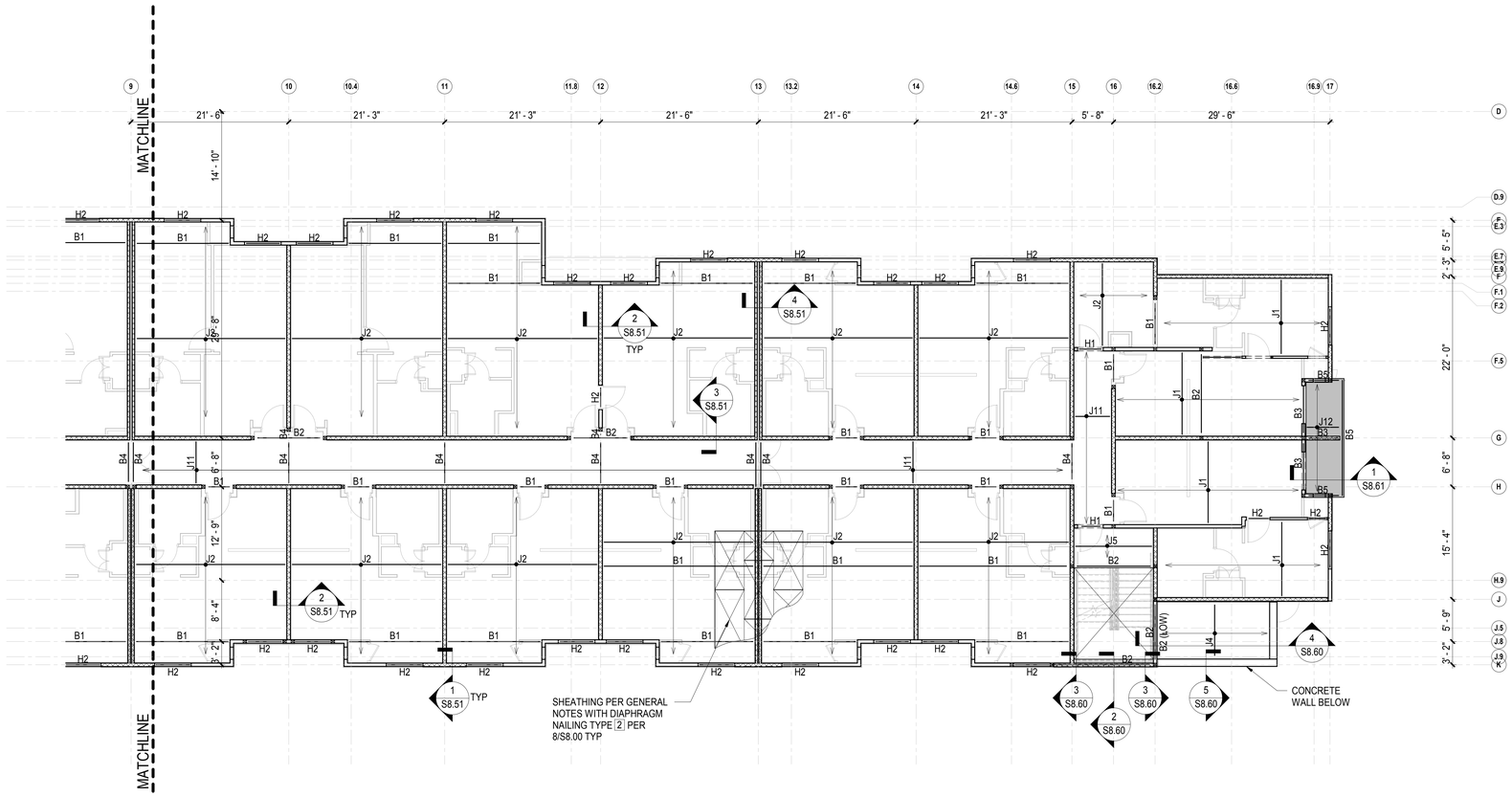

1 THIRD FLOOR FRAMING PLAN - B

1/8" = 1'-0"

BEAM SCHEDULE	
B1	3 1/2X11 7/8 PSL
B2	5 1/4X11 7/8 PSL
B3	6X12
B4	4X8
B5	6X10
B6	7X11 7/8 PSL
SB1	HSS6X4X3/8

FLOOR FRAMING NOTES

1. SEE GENERAL NOTES ON SHEET S0.10 AND S0.11.
2. SEE TYPICAL CONCRETE DETAILS ON SHEET S5 SERIES.
3. VERIFY ALL DIMENSIONS AND ELEVATIONS WITH ARCHITECTURAL DRAWINGS
4. TOP OF SLAB ELEVATION IS CALLED OUT IN PLAN. RELATIVE SLAB ELEVATIONS WITH RESPECT TO SLAB REFERENCE ELEVATION ARE SHOWN THUS.
5. TOP OF STEEL BEAMS ARE SHOWN THUS: ON PLAN. ELEVATIONS SHOWN ARE GIVEN WITH REFERENCE TO NOMINAL FLOOR LINE.
6. DEPRESSIONS, CURBS AND OPENINGS SHOWN ON THIS PLAN ARE NOT COMPLETE AS TO NUMBER, SIZE, AND LOCATION. FOR COMPLETE INFORMATION, REFER TO DRAWINGS OTHER THAN STRUCTURAL.
7. EDGE OF SLAB LOCATIONS ARE APPROXIMATE, SEE ARCH DWGS FOR EDGE OF SLAB DIMENSIONS.
8. TOP OF CONCRETE BEAMS ARE FLUSH WITH TOP OF STRUCTURAL SLAB.
9. MARKS "B1" ETC INDICATE CONCRETE BEAMS. SEE BEAM SCHEDULE ON SHEET S5.40. SEE S5.41 FOR TYPICAL CONCRETE BEAM DETAILS
10. SLAB CAMBER SHOWN THUS: C="X" SEE DETAIL 3/S5.23. PROVIDE CAMBER PER 3/S5.23 UON
11. WALLS SHOWN ON PLAN ARE WALLS ABOVE. WALLS DASHED ARE WALLS BELOW. SEE WALL ELEVATION KEY.
12. FLOOR SHEATHING SHALL BE TYPE 2. SEE 8/S8.00 FOR SCHEDULE FOR PLYWOOD PROPERTIES SEE GENERAL NOTES.
13. ALL DIAPHRAGM, SHEAR WALL, AND SHEAR TRANSFER NAILING SHALL UTILIZE COMMON OR GALVANIZED BOX NAILS.
14. ALL BOLT HOLES SHALL BE DRILLED TO 1/32" OR 1/16" OVERSIZED.
15. ⊠ INDICATES WOOD POST PLACE 6X POST UNDER ALL 6X NOMINAL OR ENGINEERED BEAMS. PLACE 4X POST UNDER ALL 4X NOMINAL OR ENGINEERED BEAMS, UON.
16. HOLDOWN CONNECTIONS SHALL BE TIGHTENED JUST PRIOR TO COVERING THE WALL FRAMING.
17. FOR ADDITIONAL BEAMS SEE SHEAR WALL PLAN.
18. FOR STAIR DETAILS SEE S7.30, S7.31 AND S8.03.
19. FOR ELEVATOR DETAILS SEE S7.40.
20. INDICATES DEPRESSED SLAB PER ARCH'L
21. INDICATES WOOD SHEAR WALL. SEE S8.40
22. INDICATES WOOD BEARING WALL. SEE S8.30
23. MARKS J1, ETC DENOTE JOISTS PER 4/S8.20
24. MARKS H1, ETC DENOTE HEADERS PER DETAIL 4/S8.30

AXIS GFA

1130 WESTWOOD BLVD
LOS ANGELES, CA 90024
T 310.209.7520
F 310.209.7516
www.axisgfa.com

PROJECT NAME

Residence Inn® Marriott.

840 KILDARE STREET,
LANCASTER, CA

OWNER:

INSITE REAL STATE DEVELOPMENT
6265 VARIEL AVENUE
WOODLAND HILLS, CA 91367

Thornton Tomasetti
Thornton Tomasetti, Inc.
707 Wilshire Blvd, Suite 4450
Los Angeles, CA 90017-3618
T 213.330.7000 F 213.330.7001

Project Status

REGISTERED PROFESSIONAL ENGINEER CHANDRA GANTRU TAMASHA No. S4416 Exp. 6/30/18 STRUCTURAL STATE OF CALIFORNIA

NO.	DATE	ISSUES AND REVISIONS	BY
	10.13.17	DESIGN DEVELOPMENT	
	11.20.17	CD PROGRESS SET	
	12.18.17	PLAN CHECK	
	02.16.18	PLAN CHECK	

DATE

SCALE AS NOTED

PROJECT NUMBER

COMPUTER FILE S17081

PROJECT NAME

DESCRIPTION
THIRD FLOOR FRAMING PLAN - B

SHEET NUMBER
S2.03B

ALL DRAWINGS AND WRITTEN MATERIAL APPEARING HEREIN CONSTITUTE ORIGINAL AND UNPUBLISHED WORK OF THE ARCHITECT AND MAY NOT BE DUPLICATED, USED OR DISCLOSED WITHOUT WRITTEN CONSENT OF THE ARCHITECT

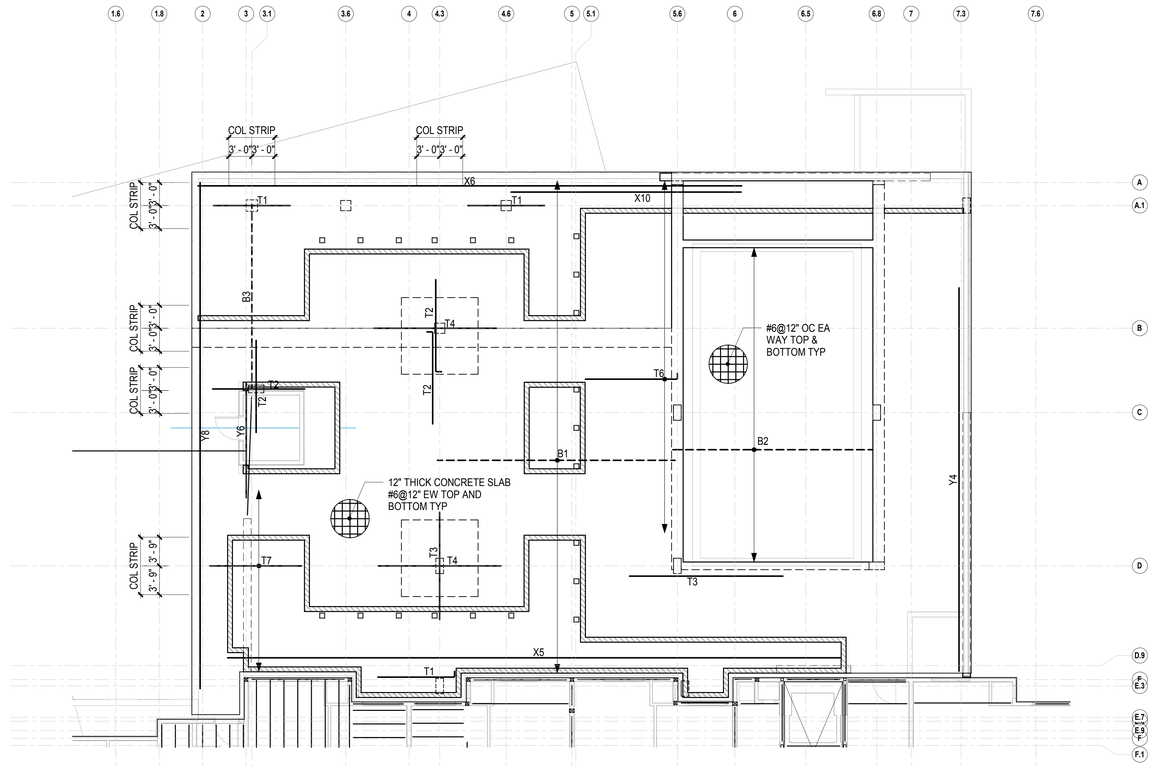

REINFORCEMENT PLAN NOTES

1. SEE S2 SERIES SHEET FOR FRAMING PLAN
2. SLAB BOTTOM BAR CLEAR COVER PER GENERAL NOTES, UON
3. SLAB TOP BAR CLEAR COVER PER GENERAL NOTES.
4. T/SLAB ELEVATION SEE FRAMING PLAN
5. SEE TYPICAL SLAB DETAILS.
6. FOR SLAB CORNERS SUPPORTED BY BEAMS OR WALLS, SEE TYPICAL BEAM / WALL SUPPORTED SLAB EXTERIOR CORNER DETAIL.
7. TWO-WAY SLAB BAR PLACEMENT:
   1. OUTER LAYER PARALLEL TO GRID LINES 1 THRU 17
   2. INNER LAYER PARALLEL TO GRID LINES A THRU K

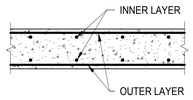

SLAB SECTION

8. LENGTH OF HOOKED BARS IN REINFORCING SCHEDULE REFERS TO TOTAL UNBENT LENGTH
9. WHERE BARS ARE CALLED OUT AS STAGGER, ALTERNATE BARS THUS:

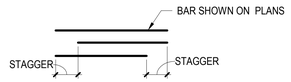

10. SEE SHEET S5.25 FOR PLACEMENT OF REINFORCEMENT UON

TOP REINFORCING SCHEDULE

MARK	REINFORCEMENT	REMARKS
T1	4#7X16'-0"	-
T2	8#7X16'-0"	-
T3	8#7X20'-0"	-
T4	10#8X20'-0"	-
-	-	-
T6	#5X12'-0"@12"	-
T7	#5X16'-0"@12"	-

BOTTOM REINFORCING SCHEDULE

MARK	REINFORCEMENT	REMARKS
B1	#5@12"X31'-0"	-
B2	#5X26'-0"@12"	-
B3	4#5X24'-0"	-
X1	1#7X15'-0"	-
X2	3#7X15'-0"	-
X3	5#7X15'-0"	-
X4	3#7X50'-0"	-
X5	5#7X80'-0"	-
X6	5#7X70'-0"	-
X7	6#9X40'-0"	-
X8	15#9X265'-0"	-
X9	15#9X215'-0"	-
X10	5#7X30'-0"	-
Y1	1#7X15'-0"	-
Y2	3#7X15'-0"	-
Y3	5#7X15'-0"	-
Y4	3#7X50'-0"	-
Y5	5#7X80'-0"	-
Y6	6#8X15'-0"	-
Y7	1#8X40'-0"	-
Y8	5#7X66'-0"	-
Y9	5#7X66'-0"	-

1 THIRD FLOOR POOL DECK REINFORCING PLAN

1/8" = 1'-0"

AXIS GFA

1130 WESTWOOD BLVD
LOS ANGELES, CA 90024
T 310.209.7520
F 310.209.7516
www.axisgfa.com

PROJECT NAME

Residence Inn® Marriott.

840 KILDARE STREET,
LANCASTER, CA

OWNER:

INSITE REAL STATE DEVELOPMENT
6265 VARIEL AVENUE
WOODLAND HILLS, CA 91367

Thornton Tomasetti
Thornton Tomasetti, Inc.
707 Wilshire Blvd, Suite 4450
Los Angeles, CA 90017-3618
T 213.330.7000 F 213.330.7001

Project Status

NO.	DATE	ISSUES AND REVISIONS	BY
	10.13.17	DESIGN DEVELOPMENT	
	11.20.17	CD PROGRESS SET	
	12.18.17	PLAN CHECK	
	02.16.18	PLAN CHECK	

DATE

SCALE AS NOTED

PROJECT NUMBER

COMPUTER FILE S17081

PROJECT NAME

DESCRIPTION
POOL DECK
REINFORCING PLAN

SHEET NUMBER
S2.03R

ALL DRAWINGS AND WRITTEN MATERIAL APPEARING HEREIN CONSTITUTE ORIGINAL AND UNPUBLISHED WORK OF THE ARCHITECT AND MAY NOT BE DUPLICATED, USED OR DISCLOSED WITHOUT WRITTEN CONSENT OF THE ARCHITECT

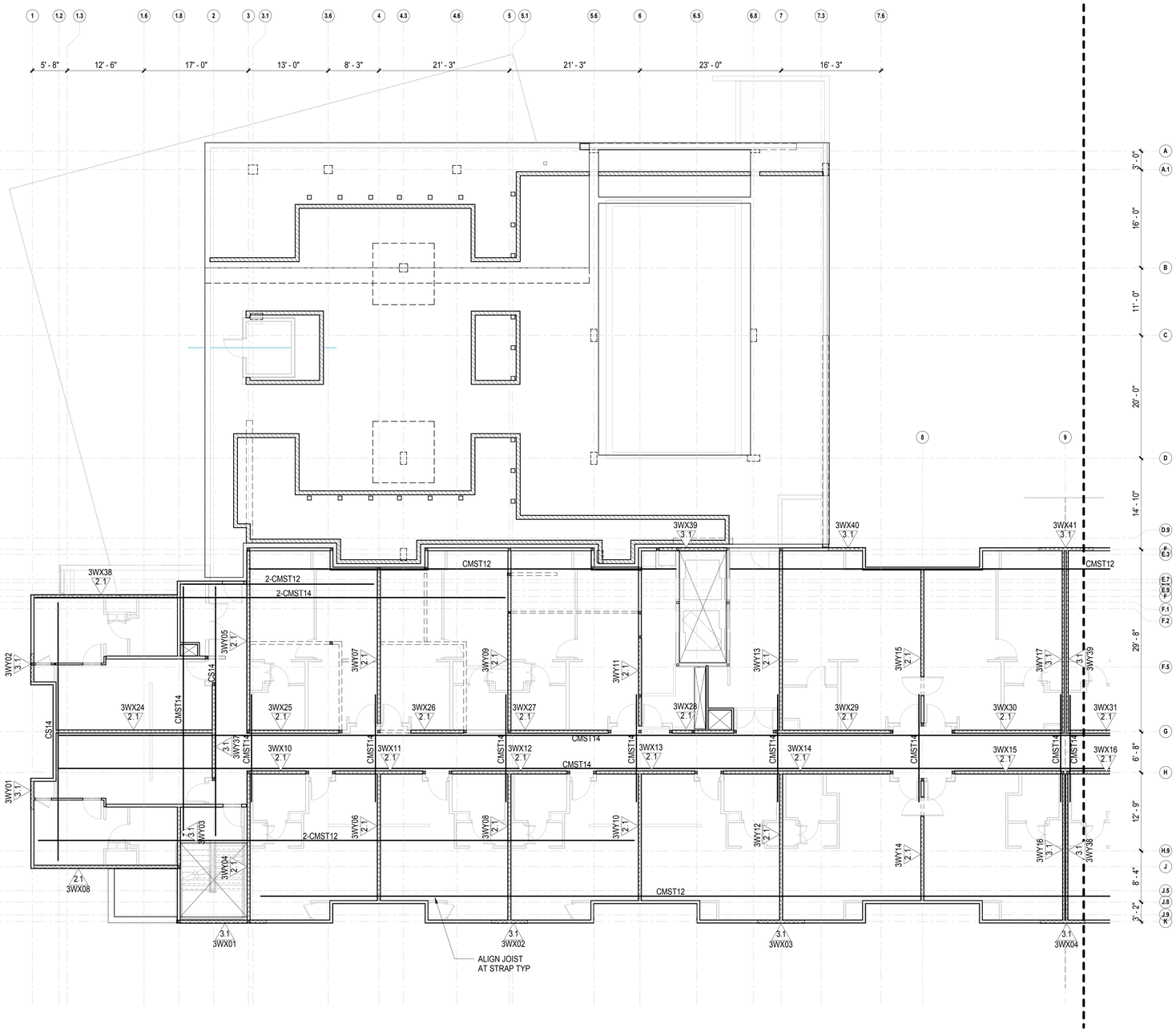

SHEAR WALL PLAN NOTES

1. VERIFY ALL DIMENSIONS AND ELEVATIONS WITH ARCHITECTURAL DRAWINGS.
2. FLOOR SHEATHING SHALL BE TYPE 2. SEE 8/S8.00 FOR SCHEDULE. FOR PLYWOOD PROPERTIES SEE GENERAL NOTES.
3. 1Y01 / 2.2 INDICATES PLYWOOD SHEAR WALL WITH POSTS AND CONTINUOUS TIE-ROD ASSEMBLY EACH END PER SHEETS S8.40 & S8.41
4. WHERE A SHEAR PANEL IS SHOWN AS PORTION OF A WALL THE REMAINDER OF THE WALL (INCLUDING ABOVE AND BELOW OPENINGS, PARAPETS, ETC.) SHALL BE SHEATHED WITH THE SAME SHEATHING AND NAILING SCHEDULE ALONG THE ENTIRE WALL . IN ADDITION, CORNERS OF ALL OPENINGS IN SHEAR WALL SHALL BE STRAPPED PER DETAIL 3/S8.40
5. ALL SHEAR WALLS, FLOOR SHEATHING AND SHEAR TRANSFER NAILS SHALL BE COMMON WIRE NAILS. SINKER AND BOX NAILS AR NOT PERMITTED.
6. TIE-DOWN CONNECTORS SHALL BE TIGHTENED JUST PRIOR TO COVERING THE WALL FRAMING.
7. CONTRACTOR TO NOTIFY THE ARCHITECT AND ENGINEER OF RECORD WHEN PLUMBING LINES OR MECHANICAL DUCTS INTERRUPT DOBULE TOP PLATES.
8. HOLES AND NOTCHES IN FRAMING MEMBERS ARE ONLY PERMITTED PER THE BUILDING CODE AND SHEET S8.01 ANY OVERSIZED HOLE OR NOTCH IN A MEMBER WILL RESULT IN REPLACING THAT MEMBER AT CONTRACTOR'S EXPENSE.
9. FOR DETAIL OF SHEAR WALL CORNERS AND INTERSECTIONS SEE DETAIL 1/S8.43
10. TOP PLATE SPLICE ALONG ALL SHEAR WALLS SHALL BE PER DETAIL 5A/S8.01 MINIMUM, UNO.
11. MST DENOTES SIMPSON MST STRAP UNO ON PLAN LARR 25713
12. CS DENOTES SIMPSON CS STRAP UNO ON PLAN LARR 25713
13. _ _ _ _ DENOTES BLK'G FOR STRAP MIN LENGTH REQUIRED PER PLAN
14. HOLD-DOWN CONNECTOR BOLTS INTO WOOD FRAMING REQUIRE APPROVED PLATE WASHERS; AND HOLD-DOWNS SHALL BE FINGER TIGHT AND ½ WRENCH TURN JUST PRIOR TO COVERING THE WALL FRAMING. CONNECTOR BOLTS INTO WOOD FRAMING REQUIRE STEEL PLATE WASHERS ON THE POST ON THE OPPOSITE SIDE OF THE ANCHORAGE DEVICE. PLATE SIZE SHALL BE A MINIMUM OF .299 INCH BY 3 INCHES BY 3 INCHES.
15. ROOF DIAPHRAGM NAILING TO BE INSPECTED BEFORE COVERING. FACE GRAIN OF PLYWOOD SHALL BE PERPENDICULAR TO SUPPORTS. FLOOR SHALL HAVE BLOCKED PANEL EDGES. PLYWOOD SPANS SHALL CONFORM WITH TABLE 2304.7
16. ALL DIAPHRAGM AND SHEAR WALL NAILING SHALL UTILIZE COMMON NAILS OR GALVANIZED BOX.
17. ALL BOLT HOLES SHALL BE DRILLED 1/32" OR 1/16" OVERSIZED.

1 THIRD FLOOR SHEAR WALL PLAN - A

1/8" = 1'-0"

AXIS GFA

1130 WESTWOOD BLVD
LOS ANGELES, CA 90024
T 310.209.7520
F 310.209.7516
www.axisgfa.com

PROJECT NAME

Residence Inn® Marriott.

840 KILDARE STREET,
LANCASTER, CA

OWNER:

INSITE REAL STATE
DEVELOPMENT
6265 VARIEL AVENUE
WOODLAND HILLS, CA 91367

Thornton Tomasetti

Thornton Tomasetti, Inc.
707 Wilshire Blvd, Suite 4450
Los Angeles, CA 90017-3618
T 213.330.7000 F 213.330.7001

Project Status

REGISTERED PROFESSIONAL ENGINEER
CHANDRA GANTRU TAMASHIRO
No. S4416
Exp. 6/30/18
STRUCTURAL
STATE OF CALIFORNIA

NO.	DATE	ISSUES AND REVISIONS	BY
	10.13.17	DESIGN DEVELOPMENT	
	11.20.17	CD PROGRESS SET	
	12.18.17	PLAN CHECK	
	02.16.18	PLAN CHECK	

DATE

SCALE AS NOTED

PROJECT NUMBER

COMPUTER FILE S17081

PROJECT NAME

DESCRIPTION
THIRD FLOOR SHEAR WALL PLAN - A

SHEET NUMBER
S2.03SWA

ALL DRAWINGS AND WRITTEN MATERIAL APPEARING HEREIN CONSTITUTE ORIGINAL AND UNPUBLISHED WORK OF THE ARCHITECT AND MAY NOT BE DUPLICATED, USED OR DISCLOSED WITHOUT WRITTEN CONSENT OF THE ARCHITECT

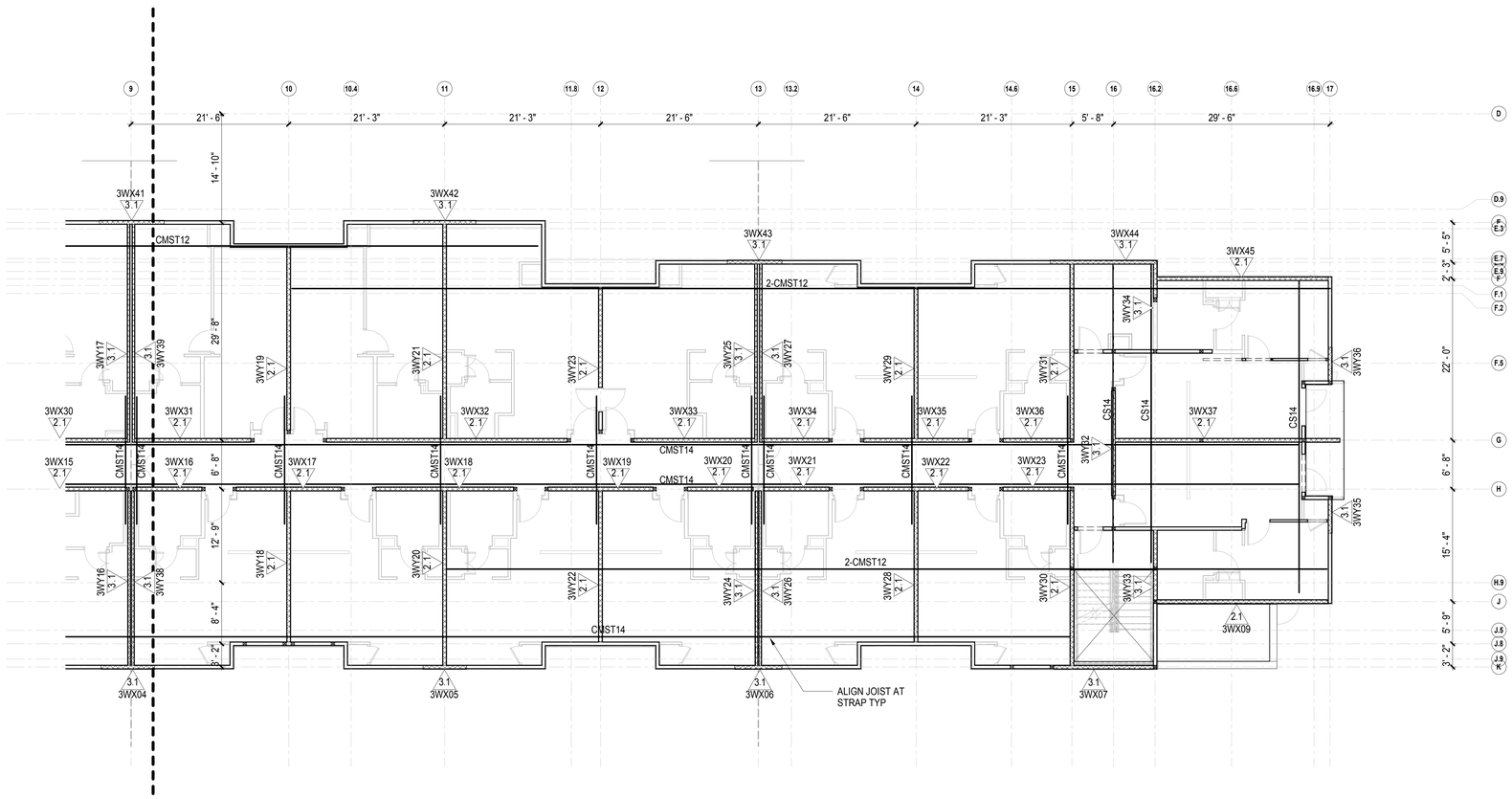

SHEAR WALL PLAN NOTES

1. VERIFY ALL DIMENSIONS AND ELEVATIONS WITH ARCHITECTURAL DRAWINGS.
2. FLOOR SHEATHING SHALL BE TYPE 2. SEE 8/S8.00 FOR SCHEDULE. FOR PLYWOOD PROPERTIES SEE GENERAL NOTES.
3. 1/01 2/27 INDICATES PLYWOOD SHEAR WALL WITH POSTS AND CONTINUOUS TIE-ROD ASSEMBLY EACH END PER SHEETS S8.40 & S8.41
4. WHERE A SHEAR PANEL IS SHOWN AS PORTION OF A WALL THE REMAINDER OF THE WALL (INCLUDING ABOVE AND BELOW OPENINGS, PARAPETS, ETC.) SHALL BE SHEATHED WITH THE SAME SHEATHING AND NAILING SCHEDULE ALONG THE ENTIRE WALL . IN ADDITION, CORNERS OF ALL OPENINGS IN SHEAR WALL SHALL BE STRAPPED PER DETAIL 3/S8.40
5. ALL SHEAR WALLS, FLOOR SHEATHING AND SHEAR TRANSFER NAILS SHALL BE COMMON WIRE NAILS. SINKER AND BOX NAILS AR NOT PERMITTED.
6. TIE-DOWN CONNECTORS SHALL BE TIGHTENED JUST PRIOR TO COVERING THE WALL FRAMING.
7. CONTRACTOR TO NOTIFY THE ARCHITECT AND ENGINEER OF RECORD WHEN PLUMBING LINES OR MECHANICAL DUCTS INTERRUPT DOBULE TOP PLATES.
8. HOLES AND NOTCHES IN FRAMING MEMBERS ARE ONLY PERMITTED PER THE BUILDING CODE AND SHEET S8.01 ANY OVERSIZED HOLE OR NOTCH IN A MEMBER WILL RESULT IN REPLACING THAT MEMBER AT CONTRACTOR'S EXPENSE.
9. FOR DETAIL OF SHEAR WALL CORNERS AND INTERSECTIONS SEE DETAIL 1/S8.43
10. TOP PLATE SPLICE ALONG ALL SHEAR WALLS SHALL BE PER DETAIL 5A/S8.01 MINIMUM, UNO.
11. MST DENOTES SIMPSON MST STRAP UNO ON PLAN LARR 25713
12. CS DENOTES SIMPSON CS STRAP UNO ON PLAN LARR 25713
13. _ _ _ _ DENOTES BLK'G FOR STRAP MIN LENGTH REQUIRED PER PLAN
14. HOLD-DOWN CONNECTOR BOLTS INTO WOOD FRAMING REQUIRE APPROVED PLATE WASHERS; AND HOLD-DOWNS SHALL BE FINGER TIGHT AND ½ WRENCH TURN JUST PRIOR TO COVERING THE WALL FRAMING. CONNECTOR BOLTS INTO WOOD FRAMING REQUIRE STEEL PLATE WASHERS ON THE POST ON THE OPPOSITE SIDE OF THE ANCHORAGE DEVICE. PLATE SIZE SHALL BE A MINIMUM OF .299 INCH BY 3 INCHES BY 3 INCHES.
15. ROOF DIAPHRAGM NAILING TO BE INSPECTED BEFORE COVERING. FACE GRAIN OF PLYWOOD SHALL BE PERPENDICULAR TO SUPPORTS. FLOOR SHALL HAVE BLOCKED PANEL EDGES. PLYWOOD SPANS SHALL CONFORM WITH TABLE 2304.7
16. ALL DIAPHRAGM AND SHEAR WALL NAILING SHALL UTILIZE COMMON NAILS OR GALVANIZED BOX.
17. ALL BOLT HOLES SHALL BE DRILLED 1/32" OR 1/16" OVERSIZED.

1 T/THIRD FLOOR SHEAR WALL PLAN - B

1/8" = 1'-0"

AXIS GFA
1130 WESTWOOD BLVD
LOS ANGELES, CA 90024
T 310.209.7520
F 310.209.7516
www.axisgfa.com

PROJECT NAME

Residence Inn® Marriott.

840 KILDARE STREET,
LANCASTER, CA

OWNER:

INSITE REAL STATE DEVELOPMENT
6265 VARIEL AVENUE
WOODLAND HILLS, CA 91367

Thornton Tomasetti
Thornton Tomasetti, Inc.
707 Wilshire Blvd, Suite 4450
Los Angeles, CA 90017-3618
T 213.330.7000 F 213.330.7001

Project Status

REGISTERED PROFESSIONAL ENGINEER
SUNDEEP GANJU
No. S4416
Exp. 6/30/18
STRUCTURAL
STATE OF CALIFORNIA

NO.	DATE	ISSUES AND REVISIONS	BY
		10.13.17 DESIGN DEVELOPMENT	
		11.20.17 CD PROGRESS SET	
		12.18.17 PLAN CHECK	
		02.16.18 PLAN CHECK	

DATE

SCALE AS NOTED

PROJECT NUMBER

COMPUTER FILE S17081

PROJECT NAME

DESCRIPTION
THIRD FLOOR SHEAR WALL PLAN - B

SHEET NUMBER
S2.03SWB

ALL DRAWINGS AND WRITTEN MATERIAL APPEARING HEREIN CONSTITUTE ORIGINAL AND UNPUBLISHED WORK OF THE ARCHITECT AND MAY NOT BE DUPLICATED, USED OR DISCLOSED WITHOUT WRITTEN CONSENT OF THE ARCHITECT

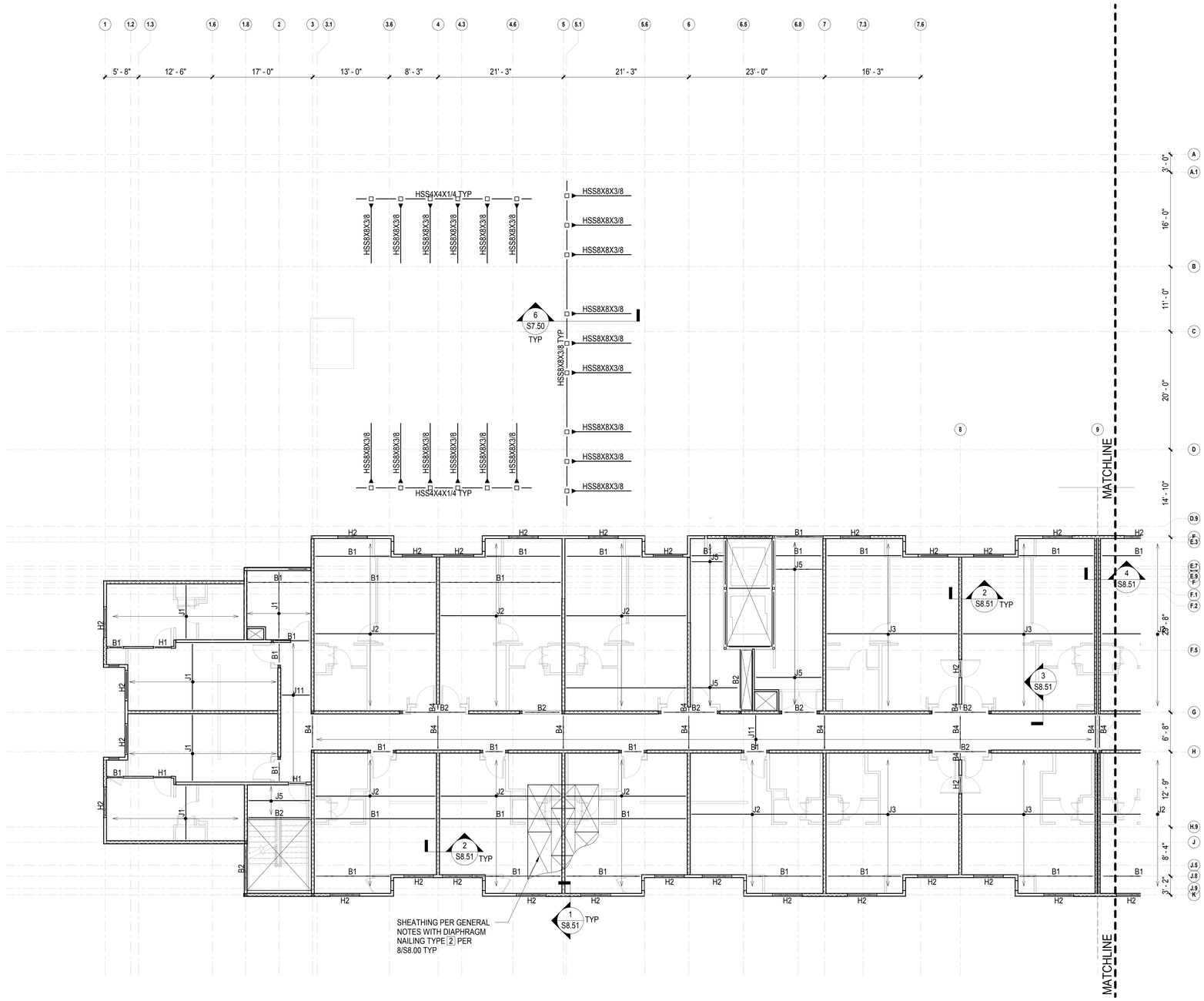

BEAM SCHEDULE

B1	3 1/2X11 7/8 PSL
B2	5 1/4X11 7/8 PSL
B3	6X12
B4	4X8
B5	6X10
B6	7X11 7/8 PSL
SB1	HSS6X4X3/8

FLOOR FRAMING NOTES

1. SEE GENERAL NOTES ON SHEET S0.10 AND S0.11.
2. SEE TYPICAL CONCRETE DETAILS ON SHEET S5 SERIES.
3. VERIFY ALL DIMENSIONS AND ELEVATIONS WITH ARCHITECTURAL DRAWINGS
4. TOP OF SLAB ELEVATION IS CALLED OUT IN PLAN. RELATIVE SLAB ELEVATIONS WITH RESPECT TO SLAB REFERENCE ELEVATION ARE SHOWN THUS.
5. TOP OF STEEL BEAMS ARE SHOWN THUS: ON PLAN. ELEVATIONS SHOWN ARE GIVEN WITH REFERENCE TO NOMINAL FLOOR LINE.
6. DEPRESSIONS, CURBS AND OPENINGS SHOWN ON THIS PLAN ARE NOT COMPLETE AS TO NUMBER, SIZE, AND LOCATION. FOR COMPLETE INFORMATION, REFER TO DRAWINGS OTHER THAN STRUCTURAL.
7. EDGE OF SLAB LOCATIONS ARE APPROXIMATE, SEE ARCH DWGS FOR EDGE OF SLAB DIMENSIONS.
8. TOP OF CONCRETE BEAMS ARE FLUSH WITH TOP OF STRUCTURAL SLAB.
9. MARKS "B1" ETC INDICATE CONCRETE BEAMS. SEE BEAM SCHEDULE ON SHEET S5.40. SEE S5.41 FOR TYPICAL CONCRETE BEAM DETAILS
10. SLAB CAMBER SHOWN THUS: C="X" SEE DETAIL 3/S5.23. PROVIDE CAMBER PER 3/S5.23 UON
11. WALLS SHOWN ON PLAN ARE WALLS ABOVE. WALLS DASHED ARE WALLS BELOW. SEE WALL ELEVATION KEY.
12. FLOOR SHEATHING SHALL BE TYPE 2. SEE 8/S8.00 FOR SCHEDULE FOR PLYWOOD PROPERTIES SEE GENERAL NOTES.
13. ALL DIAPHRAGM, SHEAR WALL, AND SHEAR TRANSFER NAILING SHALL UTILIZE COMMON OR GALVANIZED BOX NAILS.
14. ALL BOLT HOLES SHALL BE DRILLED TO 1/32" OR 1/16" OVERSIZED.
15. ⊠ INDICATES WOOD POST PLACE 6X POST UNDER ALL 6X NOMINAL OR ENGINEERED BEAMS. PLACE 4X POST UNDER ALL 4X NOMINAL OR ENGINEERED BEAMS, UON.
16. HOLDOWN CONNECTIONS SHALL BE TIGHTENED JUST PRIOR TO COVERING THE WALL FRAMING.
17. FOR ADDITIONAL BEAMS SEE SHEAR WALL PLAN.
18. FOR STAIR DETAILS SEE S7.30, S7.31 AND S8.03.
19. FOR ELEVATOR DETAILS SEE S7.40.
20. INDICATES DEPRESSED SLAB PER ARCH'L
21. INDICATES WOOD SHEAR WALL. SEE S8.40
22. INDICATES WOOD BEARING WALL. SEE S8.30
23. MARKS J1, ETC DENOTE JOISTS PER 4/S8.20
24. MARKS H1, ETC DENOTE HEADERS PER DETAIL 4/S8.30

1 FOURTH FLOOR FRMING PLAN - A AND POOL TRELLIS FRAMING PLAN

1/8" = 1'-0"

AXIS GFA

1130 WESTWOOD BLVD
LOS ANGELES, CA 90024
T 310.209.7520
F 310.209.7516
www.axisgfa.com

PROJECT NAME

Residence Inn® Marriott.

840 KILDARE STREET,
LANCASTER, CA

OWNER:

INSITE REAL STATE DEVELOPMENT
6265 VARIEL AVENUE
WOODLAND HILLS, CA 91367

Thornton Tomasetti
Thornton Tomasetti, Inc.
707 Wilshire Blvd, Suite 4450
Los Angeles, CA 90017-3618
T 213.330.7000 F 213.330.7001

Project Status

REGISTERED PROFESSIONAL ENGINEER CHARLES GANTRU TAMASHIRO No. S4416 Exp. 6/30/18 STRUCTURAL STATE OF CALIFORNIA

NO.	DATE	ISSUES AND REVISIONS	BY
	10.13.17	DESIGN DEVELOPMENT	
	11.20.17	CD PROGRESS SET	
	12.18.17	PLAN CHECK	
	02.16.18	PLAN CHECK	

DATE

SCALE AS NOTED

PROJECT NUMBER

COMPUTER FILE S17081

PROJECT NAME

DESCRIPTION
FOURTH FLOOR FRAMING PLAN - A

SHEET NUMBER
S2.04A

ALL DRAWINGS AND WRITTEN MATERIAL APPEARING HEREIN CONSTITUTE ORIGINAL AND UNPUBLISHED WORK OF THE ARCHITECT AND MAY NOT BE DUPLICATED, USED OR DISCLOSED WITHOUT WRITTEN CONSENT OF THE ARCHITECT

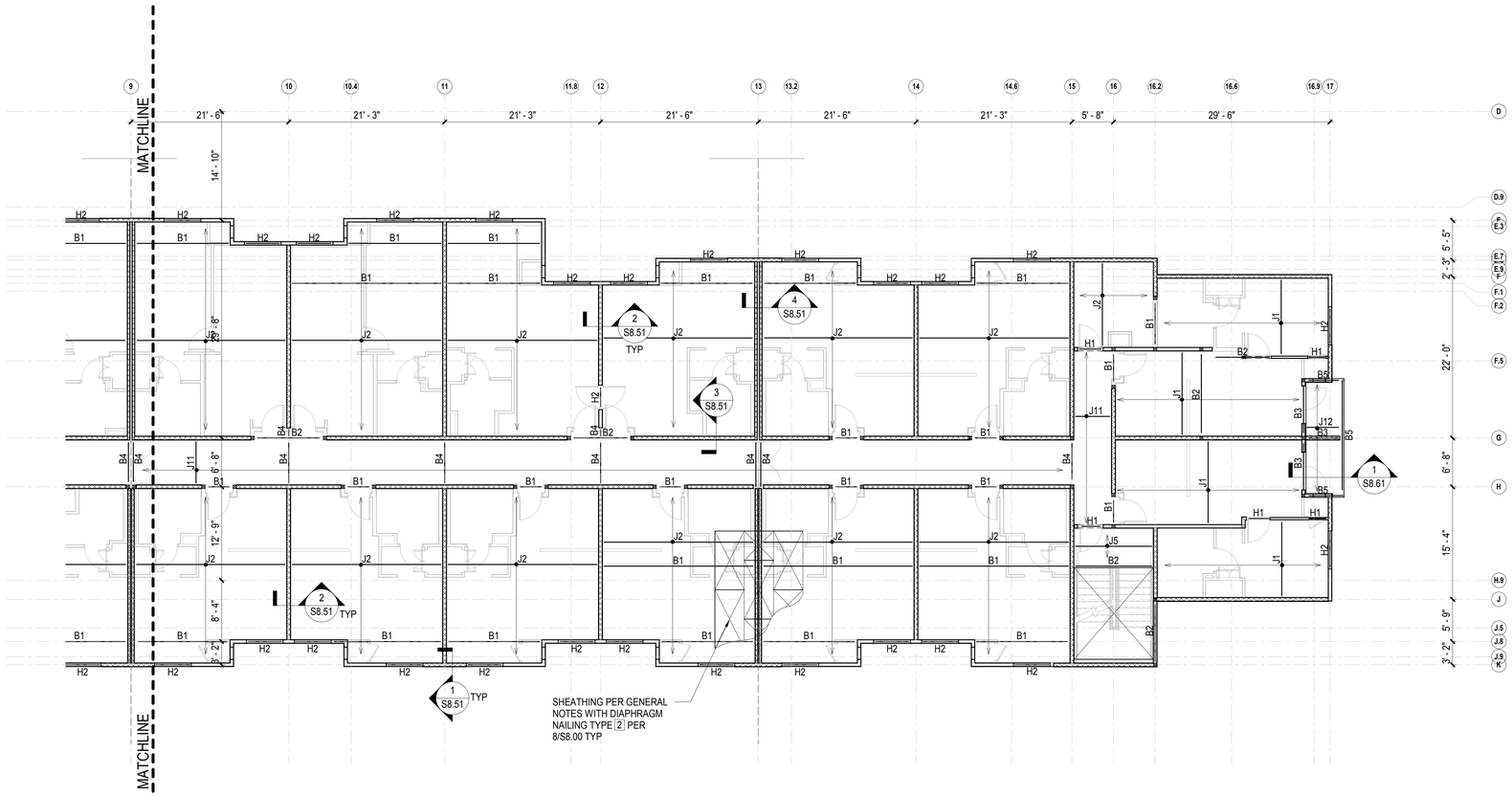

1 FOURTH FLOOR FRAMING PLAN - B

1/8" = 1'-0"

BEAM SCHEDULE	
B1	3 1/2X11 7/8 PSL
B2	5 1/4X11 7/8 PSL
B3	6X12
B4	4X8
B5	6X10
B6	7X11 7/8 PSL
SB1	HSS6X4X3/8

FLOOR FRAMING NOTES

1. SEE GENERAL NOTES ON SHEET S0.10 AND S0.11.
2. SEE TYPICAL CONCRETE DETAILS ON SHEET S5 SERIES.
3. VERIFY ALL DIMENSIONS AND ELEVATIONS WITH ARCHITECTURAL DRAWINGS
4. TOP OF SLAB ELEVATION IS CALLED OUT IN PLAN. RELATIVE SLAB ELEVATIONS WITH RESPECT TO SLAB REFERENCE ELEVATION ARE SHOWN THUS.
5. TOP OF STEEL BEAMS ARE SHOWN THUS: ON PLAN. ELEVATIONS SHOWN ARE GIVEN WITH REFERENCE TO NOMINAL FLOOR LINE.
6. DEPRESSIONS, CURBS AND OPENINGS SHOWN ON THIS PLAN ARE NOT COMPLETE AS TO NUMBER, SIZE, AND LOCATION. FOR COMPLETE INFORMATION, REFER TO DRAWINGS OTHER THAN STRUCTURAL.
7. EDGE OF SLAB LOCATIONS ARE APPROXIMATE, SEE ARCH DWGS FOR EDGE OF SLAB DIMENSIONS.
8. TOP OF CONCRETE BEAMS ARE FLUSH WITH TOP OF STRUCTURAL SLAB.
9. MARKS "B1" ETC INDICATE CONCRETE BEAMS. SEE BEAM SCHEDULE ON SHEET S5.40. SEE S5.41 FOR TYPICAL CONCRETE BEAM DETAILS
10. SLAB CAMBER SHOWN THUS: C="X" SEE DETAIL 3/S5.23. PROVIDE CAMBER PER 3/S5.23 UON
11. WALLS SHOWN ON PLAN ARE WALLS ABOVE. WALLS DASHED ARE WALLS BELOW. SEE WALL ELEVATION KEY.
12. FLOOR SHEATHING SHALL BE TYPE 2. SEE 8/S8.00 FOR SCHEDULE FOR PLYWOOD PROPERTIES SEE GENERAL NOTES.
13. ALL DIAPHRAGM, SHEAR WALL, AND SHEAR TRANSFER NAILING SHALL UTILIZE COMMON OR GALVANIZED BOX NAILS.
14. ALL BOLT HOLES SHALL BE DRILLED TO 1/32" OR 1/16" OVERSIZED.
15. ⊠ INDICATES WOOD POST PLACE 6X POST UNDER ALL 6X NOMINAL OR ENGINEERED BEAMS. PLACE 4X POST UNDER ALL 4X NOMINAL OR ENGINEERED BEAMS, UON.
16. HOLDOWN CONNECTIONS SHALL BE TIGHTENED JUST PRIOR TO COVERING THE WALL FRAMING.
17. FOR ADDITIONAL BEAMS SEE SHEAR WALL PLAN.
18. FOR STAIR DETAILS SEE S7.30, S7.31 AND S8.03.
19. FOR ELEVATOR DETAILS SEE S7.40.
20. INDICATES DEPRESSED SLAB PER ARCH'L
21. INDICATES WOOD SHEAR WALL. SEE S8.40
22. INDICATES WOOD BEARING WALL. SEE S8.30
23. MARKS J1, ETC DENOTE JOISTS PER 4/S8.20
24. MARKS H1, ETC DENOTE HEADERS PER DETAIL 4/S8.30

AXIS GFA

1130 WESTWOOD BLVD
LOS ANGELES, CA 90024
T 310.209.7520
F 310.209.7516
www.axisgfa.com

PROJECT NAME

Residence Inn® Marriott.

840 KILDARE STREET,
LANCASTER, CA

OWNER:

INSITE REAL STATE DEVELOPMENT
6265 VARIEL AVENUE
WOODLAND HILLS, CA 91367

Thornton Tomasetti
Thornton Tomasetti, Inc.
707 Wilshire Blvd, Suite 4450
Los Angeles, CA 90017-3618
T 213.330.7000 F 213.330.7001

Project Status

REGISTERED PROFESSIONAL ENGINEER
CHARLES GANTRU TAMASHIRO
No. S4416
Exp. 6/30/18
STRUCTURAL
STATE OF CALIFORNIA

NO.	DATE	ISSUES AND REVISIONS	BY
	10.13.17	DESIGN DEVELOPMENT	
	11.20.17	CD PROGRESS SET	
	12.18.17	PLAN CHECK	
	02.16.18	PLAN CHECK	

DATE

SCALE AS NOTED

PROJECT NUMBER

COMPUTER FILE S17081

PROJECT NAME

DESCRIPTION
FOURTH FLOOR FRAMING PLAN - B

SHEET NUMBER
S2.04B

ALL DRAWINGS AND WRITTEN MATERIAL APPEARING HEREIN CONSTITUTE ORIGINAL AND UNPUBLISHED WORK OF THE ARCHITECT AND MAY NOT BE DUPLICATED, USED OR DISCLOSED WITHOUT WRITTEN CONSENT OF THE ARCHITECT

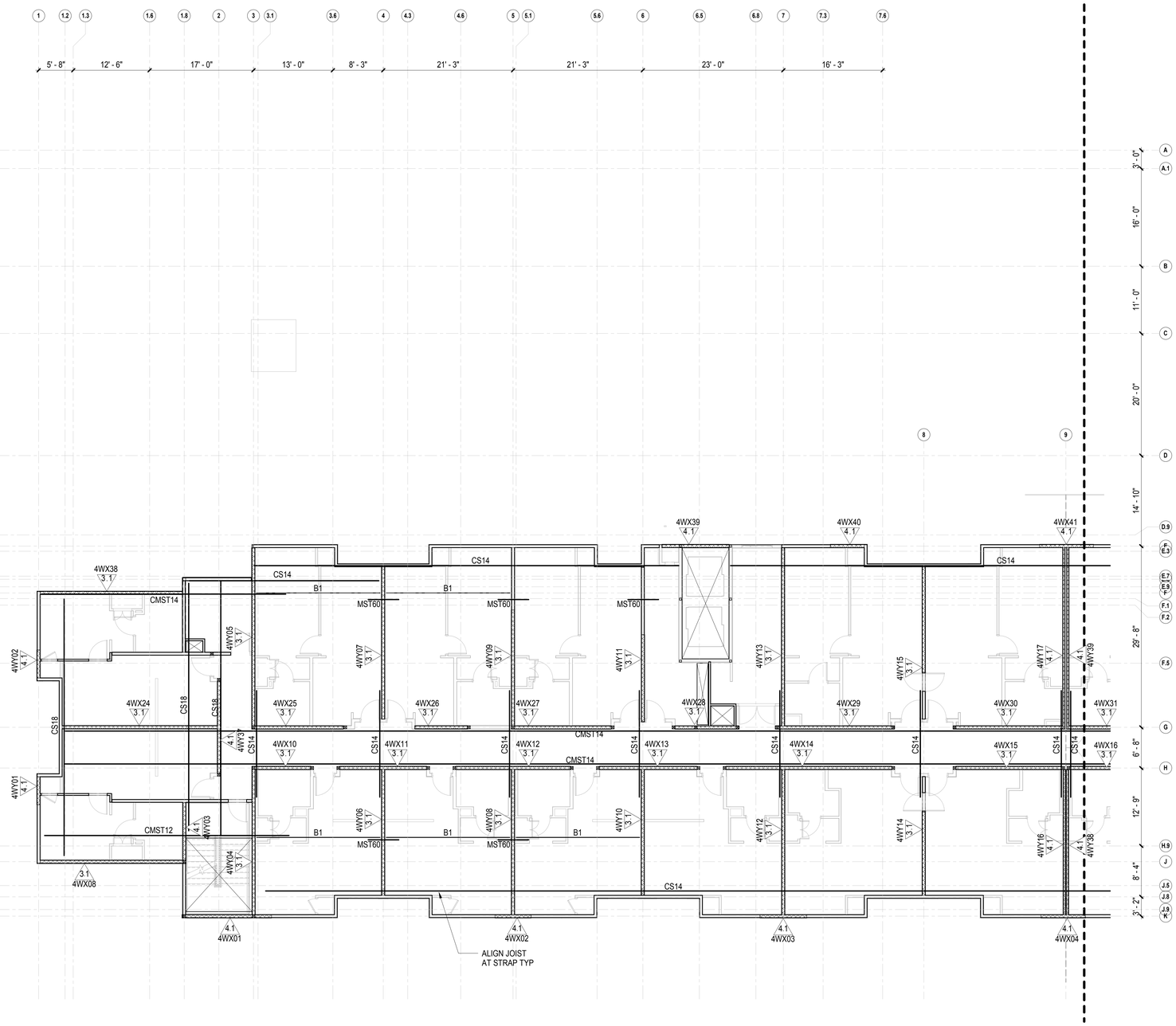

SHEAR WALL PLAN NOTES

1. VERIFY ALL DIMENSIONS AND ELEVATIONS WITH ARCHITECTURAL DRAWINGS.
2. FLOOR SHEATHING SHALL BE TYPE 2. SEE 8/S8.00 FOR SCHEDULE. FOR PLYWOOD PROPERTIES SEE GENERAL NOTES.
3. 1Y01 2.2/ INDICATES PLYWOOD SHEAR WALL WITH POSTS AND CONTINUOUS TIE-ROD ASSEMBLY EACH END PER SHEETS S8.40 & S8.41
4. WHERE A SHEAR PANEL IS SHOWN AS PORTION OF A WALL THE REMAINDER OF THE WALL (INCLUDING ABOVE AND BELOW OPENINGS, PARAPETS, ETC.) SHALL BE SHEATHED WITH THE SAME SHEATHING AND NAILING SCHEDULE ALONG THE ENTIRE WALL . IN ADDITION, CORNERS OF ALL OPENINGS IN SHEAR WALL SHALL BE STRAPPED PER DETAIL 3/S8.40
5. ALL SHEAR WALLS, FLOOR SHEATHING AND SHEAR TRANSFER NAILS SHALL BE COMMON WIRE NAILS. SINKER AND BOX NAILS AR NOT PERMITTED.
6. TIE-DOWN CONNECTORS SHALL BE TIGHTENED JUST PRIOR TO COVERING THE WALL FRAMING.
7. CONTRACTOR TO NOTIFY THE ARCHITECT AND ENGINEER OF RECORD WHEN PLUMBING LINES OR MECHANICAL DUCTS INTERRUPT DOBULE TOP PLATES.
8. HOLES AND NOTCHES IN FRAMING MEMBERS ARE ONLY PERMITTED PER THE BUILDING CODE AND SHEET S8.01 ANY OVERSIZED HOLE OR NOTCH IN A MEMBER WILL RESULT IN REPLACING THAT MEMBER AT CONTRACTOR'S EXPENSE.
9. FOR DETAIL OF SHEAR WALL CORNERS AND INTERSECTIONS SEE DETAIL 1/S8.43
10. TOP PLATE SPLICE ALONG ALL SHEAR WALLS SHALL BE PER DETAIL 5A/S8.01 MINIMUM, UNO.
11. MST DENOTES SIMPSON MST STRAP UNO ON PLAN LARR 25713
12. CS DENOTES SIMPSON CS STRAP UNO ON PLAN LARR 25713
13. _ _ _ _ DENOTES BLK'G FOR STRAP MIN LENGTH REQUIRED PER PLAN
14. HOLD-DOWN CONNECTOR BOLTS INTO WOOD FRAMING REQUIRE APPROVED PLATE WASHERS; AND HOLD-DOWNS SHALL BE FINGER TIGHT AND ½ WRENCH TURN JUST PRIOR TO COVERING THE WALL FRAMING. CONNECTOR BOLTS INTO WOOD FRAMING REQUIRE STEEL PLATE WASHERS ON THE POST ON THE OPPOSITE SIDE OF THE ANCHORAGE DEVICE. PLATE SIZE SHALL BE A MINIMUM OF .299 INCH BY 3 INCHES BY 3 INCHES.
15. ROOF DIAPHRAGM NAILING TO BE INSPECTED BEFORE COVERING. FACE GRAIN OF PLYWOOD SHALL BE PERPENDICULAR TO SUPPORTS. FLOOR SHALL HAVE BLOCKED PANEL EDGES. PLYWOOD SPANS SHALL CONFORM WITH TABLE 2304.7
16. ALL DIAPHRAGM AND SHEAR WALL NAILING SHALL UTILIZE COMMON NAILS OR GALVANIZED BOX.
17. ALL BOLT HOLES SHALL BE DRILLED 1/32" OR 1/16" OVERSIZED.

1 **FOURTH FLOOR SHEAR WALL PLAN - A**
1/8" = 1'-0"

AXIS GFA
1130 WESTWOOD BLVD
LOS ANGELES, CA 90024
T 310.209.7520
F 310.209.7516
www.axisgfa.com

PROJECT NAME

Residence Inn® Marriott.

840 KILDARE STREET,
LANCASTER, CA

OWNER:

INSITE REAL STATE
DEVELOPMENT
6265 VARIEL AVENUE
WOODLAND HILLS, CA 91367

Thornton Tomasetti
Thornton Tomasetti, Inc.
707 Wilshire Blvd, Suite 4450
Los Angeles, CA 90017-3618
T 213.330.7000 F 213.330.7001

Project Status

REGISTERED PROFESSIONAL ENGINEER
CHARLES GANTRU TAMASHIRO
No. S4416
Exp. 6/30/18
STRUCTURAL
STATE OF CALIFORNIA

NO.	DATE	ISSUES AND REVISIONS	BY
	10.13.17	DESIGN DEVELOPMENT	
	11.20.17	CD PROGRESS SET	
	12.18.17	PLAN CHECK	
	02.16.18	PLAN CHECK	

DATE

SCALE AS NOTED

PROJECT NUMBER

COMPUTER FILE S17081

PROJECT NAME

DESCRIPTION
FOURTH FLOOR SHEAR WALL PLAN - A

SHEET NUMBER
S2.04SWA

ALL DRAWINGS AND WRITTEN MATERIAL APPEARING HEREIN CONSTITUTE ORIGINAL AND UNPUBLISHED WORK OF THE ARCHITECT AND MAY NOT BE DUPLICATED, USED OR DISCLOSED WITHOUT WRITTEN CONSENT OF THE ARCHITECT

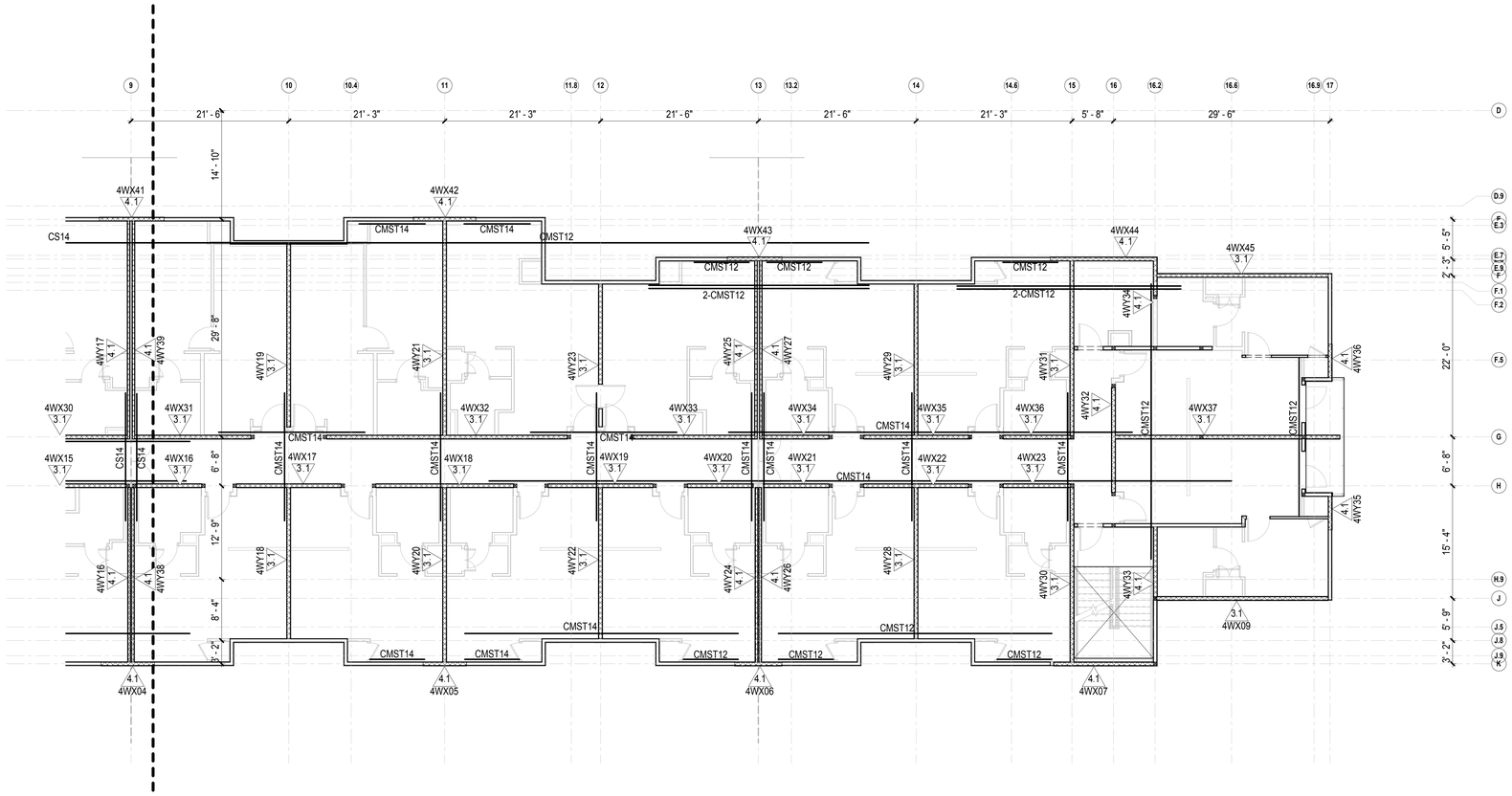

1 **FOURTH FLOOR SHEAR WALL PLAN - B**
1/8" = 1'-0"

SHEAR WALL PLAN NOTES

1. VERIFY ALL DIMENSIONS AND ELEVATIONS WITH ARCHITECTURAL DRAWINGS.
2. FLOOR SHEATHING SHALL BE TYPE 2. SEE 8/S8.00 FOR SCHEDULE. FOR PLYWOOD PROPERTIES SEE GENERAL NOTES.
3. 1Y01 / 2.2 INDICATES PLYWOOD SHEAR WALL WITH POSTS AND CONTINUOUS TIE-ROD ASSEMBLY EACH END PER SHEETS S8.40 & S8.41
4. WHERE A SHEAR PANEL IS SHOWN AS PORTION OF A WALL THE REMAINDER OF THE WALL (INCLUDING ABOVE AND BELOW OPENINGS, PARAPETS, ETC.) SHALL BE SHEATHED WITH THE SAME SHEATHING AND NAILING SCHEDULE ALONG THE ENTIRE WALL . IN ADDITION, CORNERS OF ALL OPENINGS IN SHEAR WALL SHALL BE STRAPPED PER DETAIL 3/S8.40
5. ALL SHEAR WALLS, FLOOR SHEATHING AND SHEAR TRANSFER NAILS SHALL BE COMMON WIRE NAILS. SINKER AND BOX NAILS AR NOT PERMITTED.
6. TIE-DOWN CONNECTORS SHALL BE TIGHTENED JUST PRIOR TO COVERING THE WALL FRAMING.
7. CONTRACTOR TO NOTIFY THE ARCHITECT AND ENGINEER OF RECORD WHEN PLUMBING LINES OR MECHANICAL DUCTS INTERRUPT DOBULE TOP PLATES.
8. HOLES AND NOTCHES IN FRAMING MEMBERS ARE ONLY PERMITTED PER THE BUILDING CODE AND SHEET S8.01 ANY OVERSIZED HOLE OR NOTCH IN A MEMBER WILL RESULT IN REPLACING THAT MEMBER AT CONTRACTOR'S EXPENSE.
9. FOR DETAIL OF SHEAR WALL CORNERS AND INTERSECTIONS SEE DETAIL 1/S8.43
10. TOP PLATE SPLICE ALONG ALL SHEAR WALLS SHALL BE PER DETAIL 5A/S8.01 MINIMUM, UNO.
11. MST DENOTES SIMPSON MST STRAP UNO ON PLAN LARR 25713
12. CS DENOTES SIMPSON CS STRAP UNO ON PLAN LARR 25713
13. _ _ _ _ DENOTES BLK'G FOR STRAP MIN LENGTH REQUIRED PER PLAN
14. HOLD-DOWN CONNECTOR BOLTS INTO WOOD FRAMING REQUIRE APPROVED PLATE WASHERS; AND HOLD-DOWNS SHALL BE FINGER TIGHT AND ½ WRENCH TURN JUST PRIOR TO COVERING THE WALL FRAMING. CONNECTOR BOLTS INTO WOOD FRAMING REQUIRE STEEL PLATE WASHERS ON THE POST ON THE OPPOSITE SIDE OF THE ANCHORAGE DEVICE. PLATE SIZE SHALL BE A MINIMUM OF .299 INCH BY 3 INCHES BY 3 INCHES.
15. ROOF DIAPHRAGM NAILING TO BE INSPECTED BEFORE COVERING. FACE GRAIN OF PLYWOOD SHALL BE PERPENDICULAR TO SUPPORTS. FLOOR SHALL HAVE BLOCKED PANEL EDGES. PLYWOOD SPANS SHALL CONFORM WITH TABLE 2304.7
16. ALL DIAPHRAGM AND SHEAR WALL NAILING SHALL UTILIZE COMMON NAILS OR GALVANIZED BOX.
17. ALL BOLT HOLES SHALL BE DRILLED 1/32" OR 1/16" OVERSIZED.

AXIS GFA

1130 WESTWOOD BLVD
LOS ANGELES, CA 90024
T 310.209.7520
F 310.209.7516
www.axisgfa.com

PROJECT NAME

Residence Inn® Marriott.

840 KILDARE STREET,
LANCASTER, CA

OWNER:

INSITE REAL STATE
DEVELOPMENT
6265 VARIEL AVENUE
WOODLAND HILLS, CA 91367

Thornton Tomasetti
Thornton Tomasetti, Inc.
707 Wilshire Blvd, Suite 4450
Los Angeles, CA 90017-3618
T 213.330.7000 F 213.330.7001

Project Status

REGISTERED PROFESSIONAL ENGINEER
STEVEN M. GRAVES
No. S4416
Exp. 6/30/18
STRUCTURAL
STATE OF CALIFORNIA

NO.	DATE	ISSUES AND REVISIONS	BY
		10.13.17 DESIGN DEVELOPMENT	
		11.20.17 CD PROGRESS SET	
		12.18.17 PLAN CHECK	
		02.16.18 PLAN CHECK	

DATE

SCALE AS NOTED

PROJECT NUMBER

COMPUTER FILE S17081

PROJECT NAME

DESCRIPTION
FOURTH FLOOR SHEAR WALL PLAN - B

SHEET NUMBER
S2.04SWB

ALL DRAWINGS AND WRITTEN MATERIAL APPEARING HEREIN CONSTITUTE ORIGINAL AND UNPUBLISHED WORK OF THE ARCHITECT AND MAY NOT BE DUPLICATED, USED OR DISCLOSED WITHOUT WRITTEN CONSENT OF THE ARCHITECT

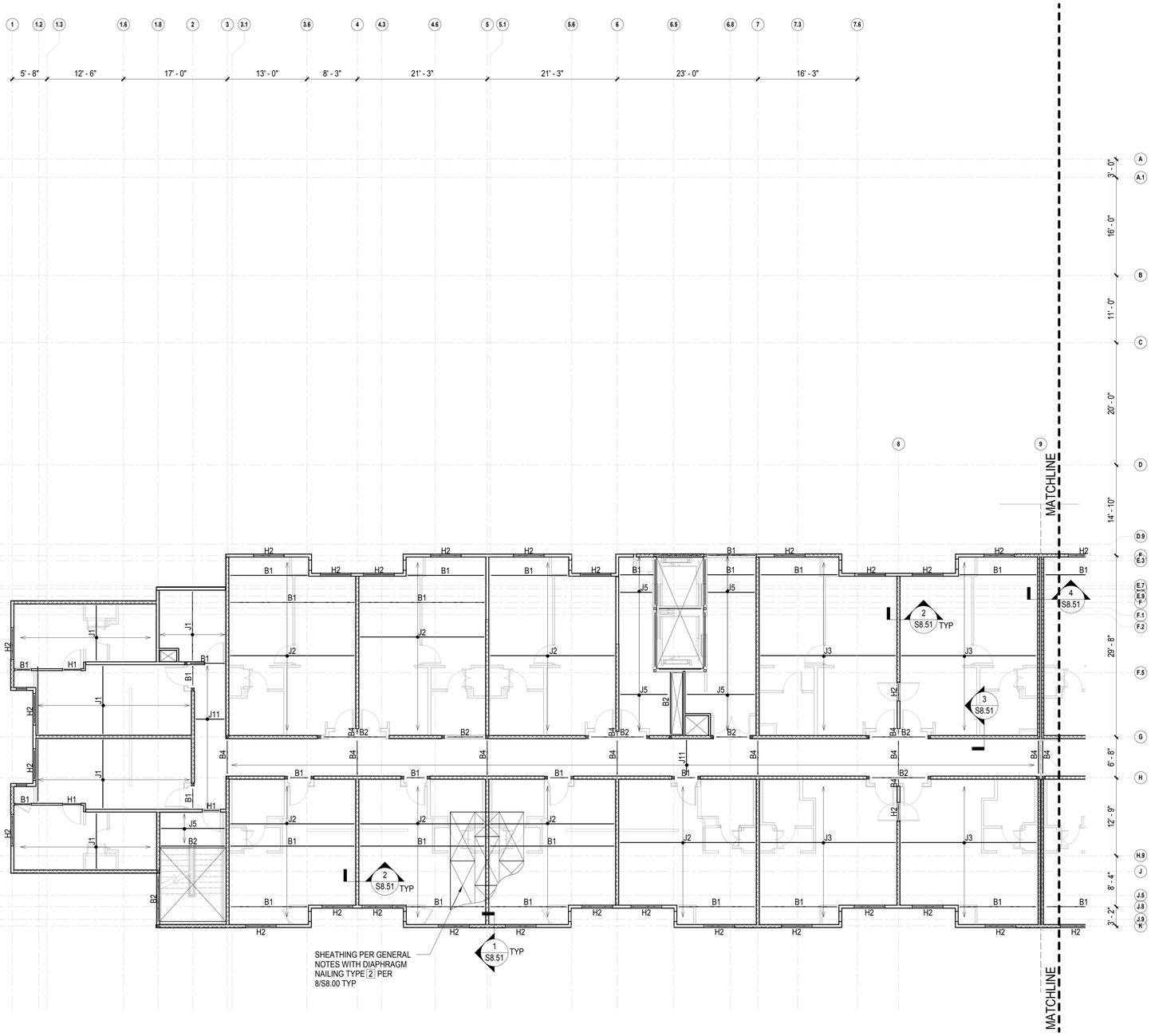

1 FIFTH FLOOR FRAMING PLAN - A

1/8" = 1'-0"

BEAM SCHEDULE	
B1	3 1/2X11 7/8 PSL
B2	5 1/4X11 7/8 PSL
B3	6X12
B4	4X8
B5	6X10
B6	7X11 7/8 PSL
SB1	HSS6X4X3/8

FLOOR FRAMING NOTES

1. SEE GENERAL NOTES ON SHEET S0.10 AND S0.11.
2. SEE TYPICAL CONCRETE DETAILS ON SHEET S5 SERIES.
3. VERIFY ALL DIMENSIONS AND ELEVATIONS WITH ARCHITECTURAL DRAWINGS
4. TOP OF SLAB ELEVATION IS CALLED OUT IN PLAN. RELATIVE SLAB ELEVATIONS WITH RESPECT TO SLAB REFERENCE ELEVATION ARE SHOWN THUS.
5. TOP OF STEEL BEAMS ARE SHOWN THUS: ON PLAN. ELEVATIONS SHOWN ARE GIVEN WITH REFERENCE TO NOMINAL FLOOR LINE.
6. DEPRESSIONS, CURBS AND OPENINGS SHOWN ON THIS PLAN ARE NOT COMPLETE AS TO NUMBER, SIZE, AND LOCATION. FOR COMPLETE INFORMATION, REFER TO DRAWINGS OTHER THAN STRUCTURAL.
7. EDGE OF SLAB LOCATIONS ARE APPROXIMATE, SEE ARCH DWGS FOR EDGE OF SLAB DIMENSIONS.
8. TOP OF CONCRETE BEAMS ARE FLUSH WITH TOP OF STRUCTURAL SLAB.
9. MARKS "B1" ETC INDICATE CONCRETE BEAMS. SEE BEAM SCHEDULE ON SHEET S5.40. SEE S5.41 FOR TYPICAL CONCRETE BEAM DETAILS
10. SLAB CAMBER SHOWN THUS: C="X" SEE DETAIL 3/S5.23. PROVIDE CAMBER PER 3/S5.23 UON
11. WALLS SHOWN ON PLAN ARE WALLS ABOVE. WALLS DASHED ARE WALLS BELOW. SEE WALL ELEVATION KEY.
12. FLOOR SHEATHING SHALL BE TYPE 2. SEE 8/S8.00 FOR SCHEDULE FOR PLYWOOD PROPERTIES SEE GENERAL NOTES.
13. ALL DIAPHRAGM, SHEAR WALL, AND SHEAR TRANSFER NAILING SHALL UTILIZE COMMON OR GALVANIZED BOX NAILS.
14. ALL BOLT HOLES SHALL BE DRILLED TO 1/32" OR 1/16" OVERSIZED.
15. ⊠ INDICATES WOOD POST PLACE 6X POST UNDER ALL 6X NOMINAL OR ENGINEERED BEAMS. PLACE 4X POST UNDER ALL 4X NOMINAL OR ENGINEERED BEAMS, UON.
16. HOLDOWN CONNECTIONS SHALL BE TIGHTENED JUST PRIOR TO COVERING THE WALL FRAMING.
17. FOR ADDITIONAL BEAMS SEE SHEAR WALL PLAN.
18. FOR STAIR DETAILS SEE S7.30, S7.31 AND S8.03.
19. FOR ELEVATOR DETAILS SEE S7.40.
20. INDICATES DEPRESSED SLAB PER ARCH'L
21. INDICATES WOOD SHEAR WALL. SEE S8.40
22. INDICATES WOOD BEARING WALL. SEE S8.30
23. MARKS J1, ETC DENOTE JOISTS PER 4/S8.20
24. MARKS H1, ETC DENOTE HEADERS PER DETAIL 4/S8.30

AXIS GFA

1130 WESTWOOD BLVD
LOS ANGELES, CA 90024
T 310.209.7520
F 310.209.7516
www.axisgfa.com

PROJECT NAME

Residence Inn® Marriott.

840 KILDARE STREET,
LANCASTER, CA

OWNER:

INSITE REAL STATE DEVELOPMENT
6265 VARIEL AVENUE
WOODLAND HILLS, CA 91367

Thornton Tomasetti
Thornton Tomasetti, Inc.
707 Wilshire Blvd, Suite 4450
Los Angeles, CA 90017-3618
T 213.330.7000 F 213.330.7001

Project Status

REGISTERED PROFESSIONAL ENGINEER
CHARLES GANTRU TAMASHIRO
No. S4416
Exp. 6/30/18
STRUCTURAL
STATE OF CALIFORNIA

NO.	DATE	ISSUES AND REVISIONS	BY
	10.13.17	DESIGN DEVELOPMENT	
	11.20.17	CD PROGRESS SET	
	12.18.17	PLAN CHECK	
	02.16.18	PLAN CHECK	

DATE

SCALE AS NOTED

PROJECT NUMBER

COMPUTER FILE S17081

PROJECT NAME

DESCRIPTION
FIFTH FLOOR FRAMING PLAN - A

SHEET NUMBER
S2.05A

ALL DRAWINGS AND WRITTEN MATERIAL APPEARING HEREIN CONSTITUTE ORIGINAL AND UNPUBLISHED WORK OF THE ARCHITECT AND MAY NOT BE DUPLICATED, USED OR DISCLOSED WITHOUT WRITTEN CONSENT OF THE ARCHITECT

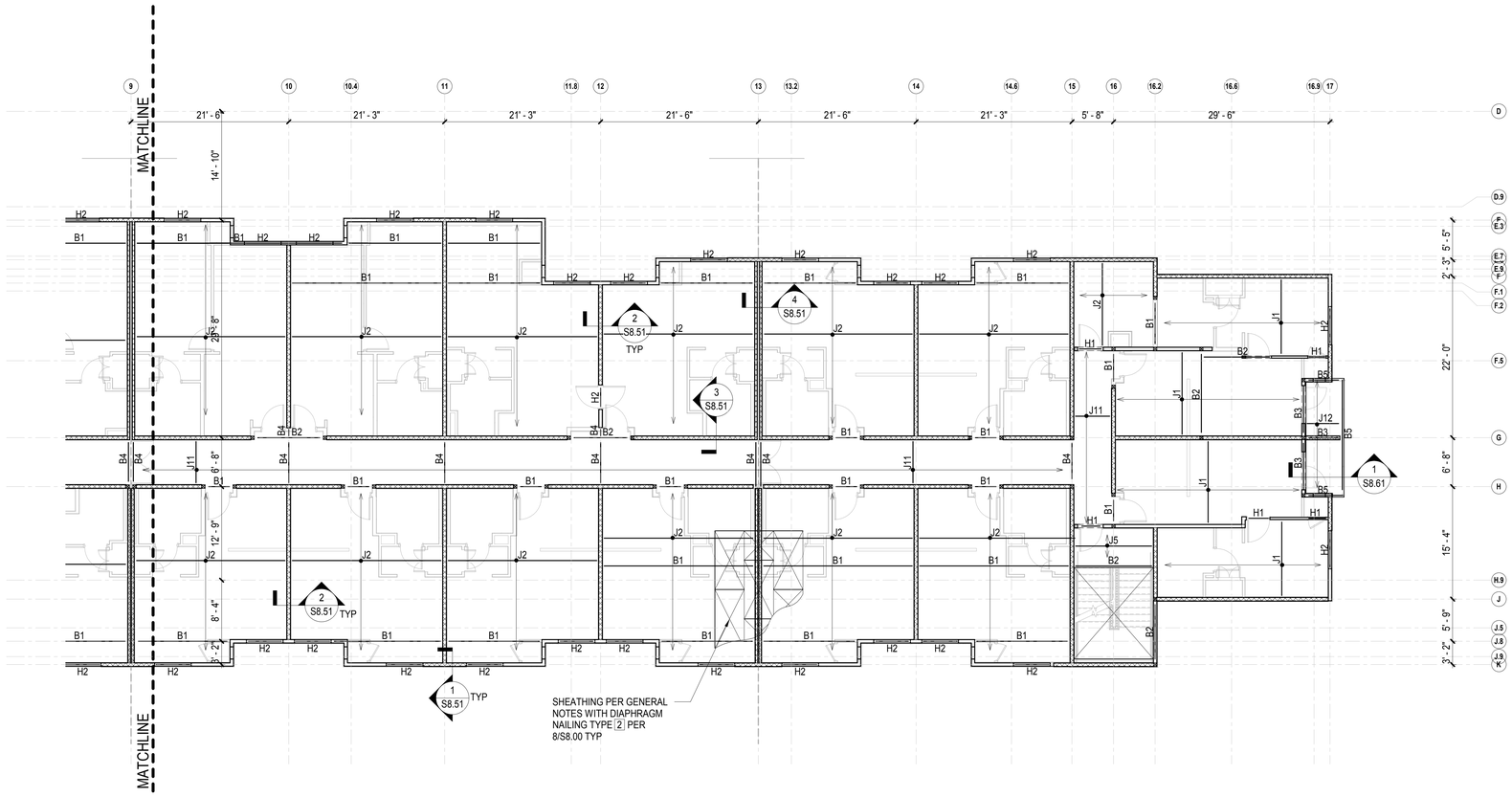

BEAM SCHEDULE

B1	3 1/2X11 7/8 PSL
B2	5 1/4X11 7/8 PSL
B3	6X12
B4	4X8
B5	6X10
B6	7X11 7/8 PSL
SB1	HSS6X4X3/8

FLOOR FRAMING NOTES

1. SEE GENERAL NOTES ON SHEET S0.10 AND S0.11.
2. SEE TYPICAL CONCRETE DETAILS ON SHEET S5 SERIES.
3. VERIFY ALL DIMENSIONS AND ELEVATIONS WITH ARCHITECTURAL DRAWINGS
4. TOP OF SLAB ELEVATION IS CALLED OUT IN PLAN. RELATIVE SLAB ELEVATIONS WITH RESPECT TO SLAB REFERENCE ELEVATION ARE SHOWN THUS.
5. TOP OF STEEL BEAMS ARE SHOWN THUS: ON PLAN. ELEVATIONS SHOWN ARE GIVEN WITH REFERENCE TO NOMINAL FLOOR LINE.
6. DEPRESSIONS, CURBS AND OPENINGS SHOWN ON THIS PLAN ARE NOT COMPLETE AS TO NUMBER, SIZE, AND LOCATION. FOR COMPLETE INFORMATION, REFER TO DRAWINGS OTHER THAN STRUCTURAL.
7. EDGE OF SLAB LOCATIONS ARE APPROXIMATE, SEE ARCH DWGS FOR EDGE OF SLAB DIMENSIONS.
8. TOP OF CONCRETE BEAMS ARE FLUSH WITH TOP OF STRUCTURAL SLAB.
9. MARKS "B1" ETC INDICATE CONCRETE BEAMS. SEE BEAM SCHEDULE ON SHEET S5.40. SEE S5.41 FOR TYPICAL CONCRETE BEAM DETAILS
10. SLAB CAMBER SHOWN THUS. C="X" SEE DETAIL 3/S5.23. PROVIDE CAMBER PER 3/S5.23 UON
11. WALLS SHOWN ON PLAN ARE WALLS ABOVE. WALLS DASHED ARE WALLS BELOW. SEE WALL ELEVATION KEY.
12. FLOOR SHEATHING SHALL BE TYPE 2. SEE 8/S8.00 FOR SCHEDULE FOR PLYWOOD PROPERTIES SEE GENERAL NOTES.
13. ALL DIAPHRAGM, SHEAR WALL, AND SHEAR TRANSFER NAILING SHALL UTILIZE COMMON OR GALVANIZED BOX NAILS.
14. ALL BOLT HOLES SHALL BE DRILLED TO 1/32" OR 1/16" OVERSIZED.
15. ⊠ INDICATES WOOD POST PLACE 6X POST UNDER ALL 6X NOMINAL OR ENGINEERED BEAMS, PLACE 4X POST UNDER ALL 4X NOMINAL OR ENGINEERED BEAMS, UON.
16. HOLDOWN CONNECTIONS SHALL BE TIGHTENED JUST PRIOR TO COVERING THE WALL FRAMING.
17. FOR ADDITIONAL BEAMS SEE SHEAR WALL PLAN.
18. FOR STAIR DETAILS SEE S7.30, S7.31 AND S8.03.
19. FOR ELEVATOR DETAILS SEE S7.40.
20. INDICATES DEPRESSED SLAB PER ARCH'L
21. INDICATES WOOD SHEAR WALL. SEE S8.40
22. INDICATES WOOD BEARING WALL. SEE S8.30
23. MARKS J1, ETC DENOTE JOISTS PER 4/S8.20
24. MARKS H1, ETC DENOTE HEADERS PER DETAIL 4/S8.30

1 **FIFTH FLOOR FRAMING PLAN - B**
1/8" = 1'-0"

AXIS GFA
1130 WESTWOOD BLVD
LOS ANGELES, CA 90024
T 310.209.7520
F 310.209.7516
www.axisgfa.com

PROJECT NAME

Residence Inn® Marriott.

840 KILDARE STREET,
LANCASTER, CA

OWNER:

INSITE REAL STATE
DEVELOPMENT
6265 VARIEL AVENUE
WOODLAND HILLS, CA 91367

Thornton Tomasetti
Thornton Tomasetti, Inc.
707 Wilshire Blvd, Suite 4450
Los Angeles, CA 90017-3618
T 213.330.7000 F 213.330.7001

Project Status

REGISTERED PROFESSIONAL ENGINEER
GORDAN GANTRI SAKELARIS
No. S4416
Exp. 6/30/18
STRUCTURAL
STATE OF CALIFORNIA

NO.	DATE	ISSUES AND REVISIONS	BY
	10.13.17	DESIGN DEVELOPMENT	
	11.20.17	CD PROGRESS SET	
	12.18.17	PLAN CHECK	
	02.16.18	PLAN CHECK	

DATE
SCALE AS NOTED
PROJECT NUMBER
COMPUTER FILE S17081
PROJECT NAME

DESCRIPTION
FIFTH FLOOR FRAMING PLAN - B

SHEET NUMBER
S2.05B

ALL DRAWINGS AND WRITTEN MATERIAL APPEARING HEREIN CONSTITUTE ORIGINAL AND UNPUBLISHED WORK OF THE ARCHITECT AND MAY NOT BE DUPLICATED, USED OR DISCLOSED WITHOUT WRITTEN CONSENT OF THE ARCHITECT

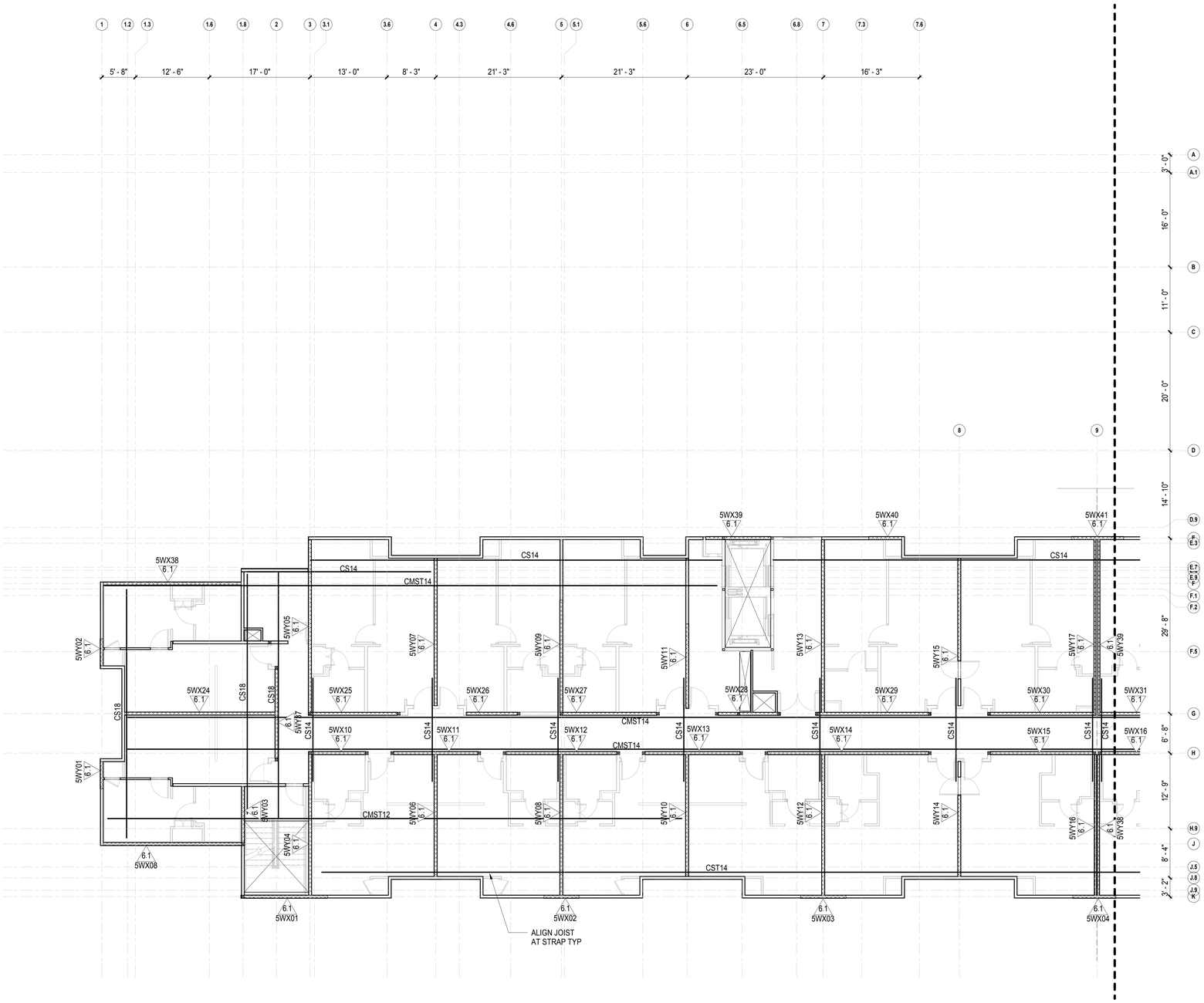

SHEAR WALL PLAN NOTES

1. VERIFY ALL DIMENSIONS AND ELEVATIONS WITH ARCHITECTURAL DRAWINGS.
2. FLOOR SHEATHING SHALL BE TYPE 2. SEE 8/S8.00 FOR SCHEDULE. FOR PLYWOOD PROPERTIES SEE GENERAL NOTES.
3. 1Y01 / 2.2 INDICATES PLYWOOD SHEAR WALL WITH POSTS AND CONTINUOUS TIE-ROD ASSEMBLY EACH END PER SHEETS S8.40 & S8.41
4. WHERE A SHEAR PANEL IS SHOWN AS PORTION OF A WALL THE REMAINDER OF THE WALL (INCLUDING ABOVE AND BELOW OPENINGS, PARAPETS, ETC.) SHALL BE SHEATHED WITH THE SAME SHEATHING AND NAILING SCHEDULE ALONG THE ENTIRE WALL . IN ADDITION, CORNERS OF ALL OPENINGS IN SHEAR WALL SHALL BE STRAPPED PER DETAIL 3/S8.40
5. ALL SHEAR WALLS, FLOOR SHEATHING AND SHEAR TRANSFER NAILS SHALL BE COMMON WIRE NAILS. SINKER AND BOX NAILS AR NOT PERMITTED.
6. TIE-DOWN CONNECTORS SHALL BE TIGHTENED JUST PRIOR TO COVERING THE WALL FRAMING.
7. CONTRACTOR TO NOTIFY THE ARCHITECT AND ENGINEER OF RECORD WHEN PLUMBING LINES OR MECHANICAL DUCTS INTERRUPT DOBULE TOP PLATES.
8. HOLES AND NOTCHES IN FRAMING MEMBERS ARE ONLY PERMITTED PER THE BUILDING CODE AND SHEET S8.01 ANY OVERSIZED HOLE OR NOTCH IN A MEMBER WILL RESULT IN REPLACING THAT MEMBER AT CONTRACTOR'S EXPENSE.
9. FOR DETAIL OF SHEAR WALL CORNERS AND INTERSECTIONS SEE DETAIL 1/S8.43
10. TOP PLATE SPLICE ALONG ALL SHEAR WALLS SHALL BE PER DETAIL 5A/S8.01 MINIMUM, UNO.
11. MST DENOTES SIMPSON MST STRAP UNO ON PLAN LARR 25713
12. CS DENOTES SIMPSON CS STRAP UNO ON PLAN LARR 25713
13. _ _ _ _ DENOTES BLK'G FOR STRAP MIN LENGTH REQUIRED PER PLAN
14. HOLD-DOWN CONNECTOR BOLTS INTO WOOD FRAMING REQUIRE APPROVED PLATE WASHERS; AND HOLD-DOWNS SHALL BE FINGER TIGHT AND ½ WRENCH TURN JUST PRIOR TO COVERING THE WALL FRAMING. CONNECTOR BOLTS INTO WOOD FRAMING REQUIRE STEEL PLATE WASHERS ON THE POST ON THE OPPOSITE SIDE OF THE ANCHORAGE DEVICE. PLATE SIZE SHALL BE A MINIMUM OF .299 INCH BY 3 INCHES BY 3 INCHES.
15. ROOF DIAPHRAGM NAILING TO BE INSPECTED BEFORE COVERING. FACE GRAIN OF PLYWOOD SHALL BE PERPENDICULAR TO SUPPORTS. FLOOR SHALL HAVE BLOCKED PANEL EDGES. PLYWOOD SPANS SHALL CONFORM WITH TABLE 2304.7
16. ALL DIAPHRAGM AND SHEAR WALL NAILING SHALL UTILIZE COMMON NAILS OR GALVANIZED BOX.
17. ALL BOLT HOLES SHALL BE DRILLED 1/32" OR 1/16" OVERSIZED.

1 FIFTH FLOOR SHEAR WALL PLAN - A

1/8" = 1'-0"

AXIS GFA

1130 WESTWOOD BLVD
LOS ANGELES, CA 90024
T 310.209.7520
F 310.209.7516
www.axisgfa.com

PROJECT NAME

Residence Inn® Marriott.

840 KILDARE STREET,
LANCASTER, CA

OWNER:

INSITE REAL STATE
DEVELOPMENT
6265 VARIEL AVENUE
WOODLAND HILLS, CA 91367

Thornton Tomasetti
Thornton Tomasetti, Inc.
707 Wilshire Blvd, Suite 4450
Los Angeles, CA 90017-3618
T 213.330.7000 F 213.330.7001

Project Status

REGISTERED PROFESSIONAL ENGINEER
GARNER GANIRU TAMBUNAN
No. S4416
Exp. 6/30/18
STRUCTURAL
STATE OF CALIFORNIA

NO.	DATE	ISSUES AND REVISIONS	BY
	10.13.17	DESIGN DEVELOPMENT	
	11.20.17	CD PROGRESS SET	
	12.18.17	PLAN CHECK	
	02.16.18	PLAN CHECK	

DATE

SCALE AS NOTED

PROJECT NUMBER

COMPUTER FILE S17081

PROJECT NAME

DESCRIPTION
FIFTH FLOOR SHEAR WALL PLAN - A

SHEET NUMBER
S2.05SWA

ALL DRAWINGS AND WRITTEN MATERIAL APPEARING HEREIN CONSTITUTE ORIGINAL AND UNPUBLISHED WORK OF THE ARCHITECT AND MAY NOT BE DUPLICATED, USED OR DISCLOSED WITHOUT WRITTEN CONSENT OF THE ARCHITECT

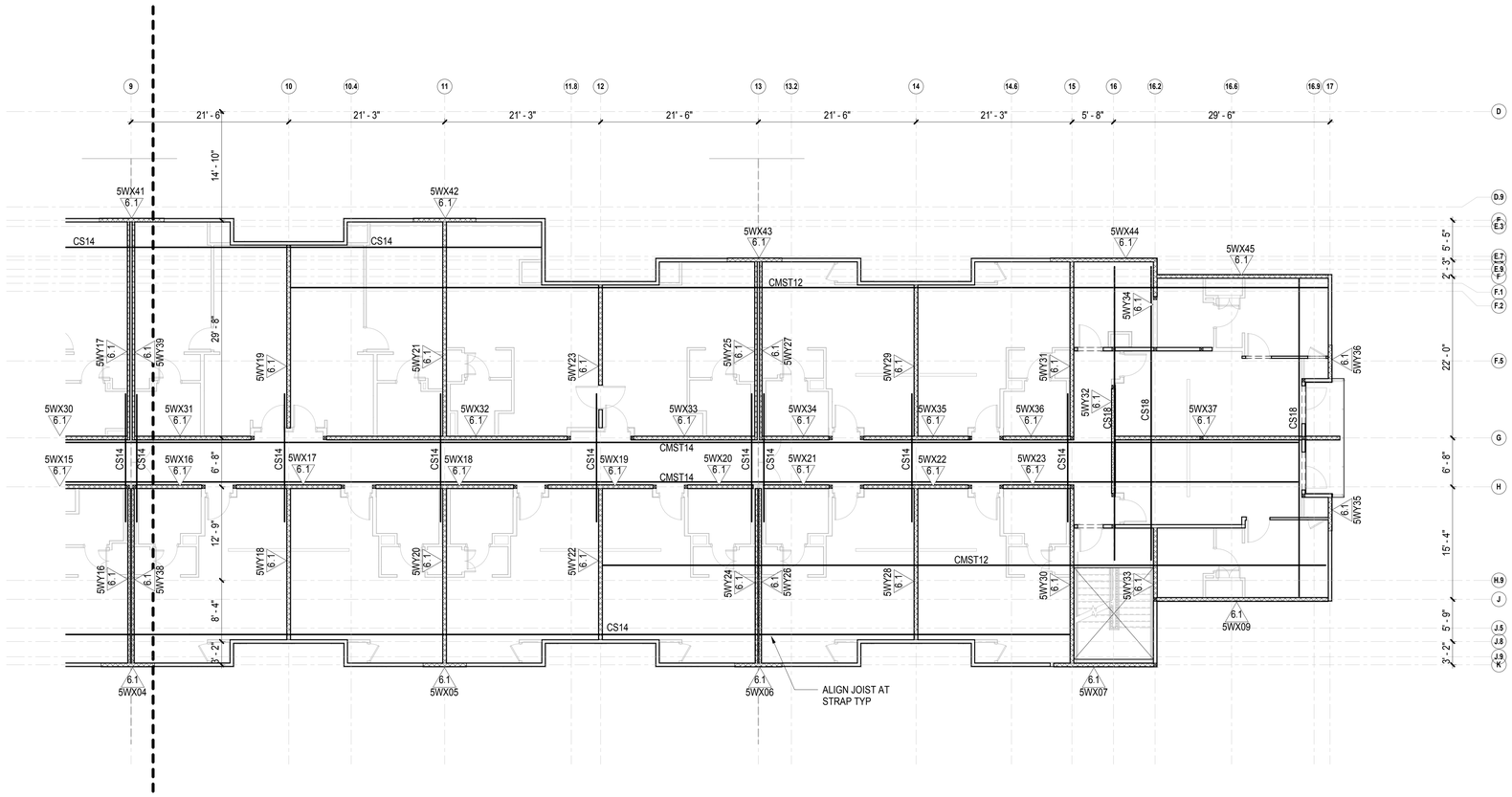

SHEAR WALL PLAN NOTES

1. VERIFY ALL DIMENSIONS AND ELEVATIONS WITH ARCHITECTURAL DRAWINGS.
2. FLOOR SHEATHING SHALL BE TYPE 2. SEE 8/S8.00 FOR SCHEDULE. FOR PLYWOOD PROPERTIES SEE GENERAL NOTES.
3. 1Y01 / 1Z27 INDICATES PLYWOOD SHEAR WALL WITH POSTS AND CONTINUOUS TIE-ROD ASSEMBLY EACH END PER SHEETS S8.40 & S8.41
4. WHERE A SHEAR PANEL IS SHOWN AS PORTION OF A WALL THE REMAINDER OF THE WALL (INCLUDING ABOVE AND BELOW OPENINGS, PARAPETS, ETC.) SHALL BE SHEATHED WITH THE SAME SHEATHING AND NAILING SCHEDULE ALONG THE ENTIRE WALL . IN ADDITION, CORNERS OF ALL OPENINGS IN SHEAR WALL SHALL BE STRAPPED PER DETAIL 3/S8.40
5. ALL SHEAR WALLS, FLOOR SHEATHING AND SHEAR TRANSFER NAILS SHALL BE COMMON WIRE NAILS. SINKER AND BOX NAILS AR NOT PERMITTED.
6. TIE-DOWN CONNECTORS SHALL BE TIGHTENED JUST PRIOR TO COVERING THE WALL FRAMING.
7. CONTRACTOR TO NOTIFY THE ARCHITECT AND ENGINEER OF RECORD WHEN PLUMBING LINES OR MECHANICAL DUCTS INTERRUPT DOBULE TOP PLATES.
8. HOLES AND NOTCHES IN FRAMING MEMBERS ARE ONLY PERMITTED PER THE BUILDING CODE AND SHEET S8.01 ANY OVERSIZED HOLE OR NOTCH IN A MEMBER WILL RESULT IN REPLACING THAT MEMBER AT CONTRACTOR'S EXPENSE.
9. FOR DETAIL OF SHEAR WALL CORNERS AND INTERSECTIONS SEE DETAIL 1/S8.43
10. TOP PLATE SPLICE ALONG ALL SHEAR WALLS SHALL BE PER DETAIL 5A/S8.01 MINIMUM, UNO.
11. MST DENOTES SIMPSON MST STRAP UNO ON PLAN LARR 25713
12. CS DENOTES SIMPSON CS STRAP UNO ON PLAN LARR 25713
13. _ _ _ _ DENOTES BLK'G FOR STRAP MIN LENGTH REQUIRED PER PLAN
14. HOLD-DOWN CONNECTOR BOLTS INTO WOOD FRAMING REQUIRE APPROVED PLATE WASHERS; AND HOLD-DOWNS SHALL BE FINGER TIGHT AND ½ WRENCH TURN JUST PRIOR TO COVERING THE WALL FRAMING. CONNECTOR BOLTS INTO WOOD FRAMING REQUIRE STEEL PLATE WASHERS ON THE POST ON THE OPPOSITE SIDE OF THE ANCHORAGE DEVICE. PLATE SIZE SHALL BE A MINIMUM OF .299 INCH BY 3 INCHES BY 3 INCHES.
15. ROOF DIAPHRAGM NAILING TO BE INSPECTED BEFORE COVERING. FACE GRAIN OF PLYWOOD SHALL BE PERPENDICULAR TO SUPPORTS. FLOOR SHALL HAVE BLOCKED PANEL EDGES. PLYWOOD SPANS SHALL CONFORM WITH TABLE 2304.7
16. ALL DIAPHRAGM AND SHEAR WALL NAILING SHALL UTILIZE COMMON NAILS OR GALVANIZED BOX.
17. ALL BOLT HOLES SHALL BE DRILLED 1/32" OR 1/16" OVERSIZED.

1 FIFTH FLOOR SHEAR WALL PLAN - B

1/8" = 1'-0"

AXIS GFA

1130 WESTWOOD BLVD
LOS ANGELES, CA 90024
T 310.209.7520
F 310.209.7516
www.axisgfa.com

PROJECT NAME

Residence Inn® Marriott.

840 KILDARE STREET,
LANCASTER, CA

OWNER:

INSITE REAL STATE DEVELOPMENT
6265 VARIEL AVENUE
WOODLAND HILLS, CA 91367

Thornton Tomasetti

Thornton Tomasetti, Inc.
707 Wilshire Blvd, Suite 4450
Los Angeles, CA 90017-3618
T 213.330.7000 F 213.330.7001

Project Status

REGISTERED PROFESSIONAL ENGINEER
CHANDAN GANTRU, ENGINEER
No. S4416
Exp. 6/30/18
STRUCTURAL
STATE OF CALIFORNIA

NO.	DATE	ISSUES AND REVISIONS	BY
		10.13.17 DESIGN DEVELOPMENT	
		11.20.17 CD PROGRESS SET	
		12.18.17 PLAN CHECK	
		02.16.18 PLAN CHECK	

DATE

SCALE AS NOTED

PROJECT NUMBER

COMPUTER FILE S17081

PROJECT NAME

DESCRIPTION
FIFTH FLOOR SHEAR WALL PLAN - B

SHEET NUMBER
S2.05SWB

ALL DRAWINGS AND WRITTEN MATERIAL APPEARING HEREIN CONSTITUTE ORIGINAL AND UNPUBLISHED WORK OF THE ARCHITECT AND MAY NOT BE DUPLICATED, USED OR DISCLOSED WITHOUT WRITTEN CONSENT OF THE ARCHITECT

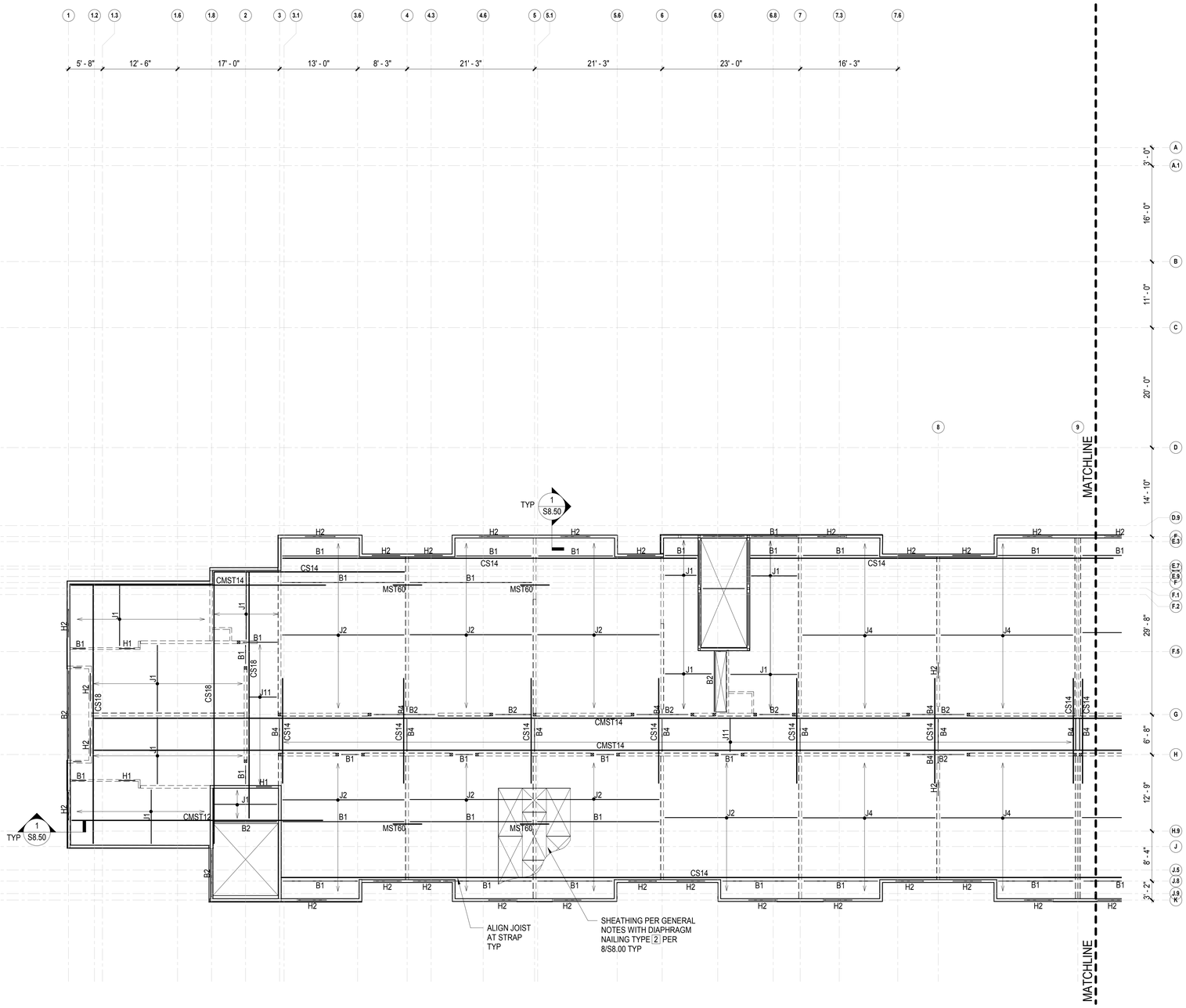

1 ROOF FRAMING PLAN - A
1/8" = 1'-0"

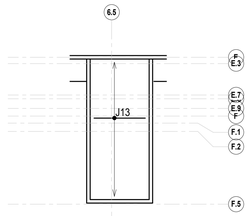

2 ELEVATOR ROOF FRAMING PLAN
1/8" = 1'-0"

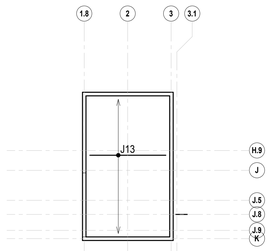

3 STAIR ROOF FRAMING PLAN
1/8" = 1'-0"

BEAM SCHEDULE	
B1	3 1/2X11 7/8 PSL
B2	5 1/4X11 7/8 PSL
B3	6X12
B4	4X8
B5	6X10
B6	7X11 7/8 PSL
SB1	HSS6X4X3/8

FLOOR FRAMING NOTES

1. SEE GENERAL NOTES ON SHEET S0.10 AND S0.11.
2. SEE TYPICAL CONCRETE DETAILS ON SHEET S5 SERIES.
3. VERIFY ALL DIMENSIONS AND ELEVATIONS WITH ARCHITECTURAL DRAWINGS
4. TOP OF SLAB ELEVATION IS CALLED OUT IN PLAN. RELATIVE SLAB ELEVATIONS WITH RESPECT TO SLAB REFERENCE ELEVATION ARE SHOWN THUS.
5. TOP OF STEEL BEAMS ARE SHOWN THUS: ON PLAN. ELEVATIONS SHOWN ARE GIVEN WITH REFERENCE TO NOMINAL FLOOR LINE.
6. DEPRESSIONS, CURBS AND OPENINGS SHOWN ON THIS PLAN ARE NOT COMPLETE AS TO NUMBER, SIZE, AND LOCATION. FOR COMPLETE INFORMATION, REFER TO DRAWINGS OTHER THAN STRUCTURAL.
7. EDGE OF SLAB LOCATIONS ARE APPROXIMATE, SEE ARCH DWGS FOR EDGE OF SLAB DIMENSIONS.
8. TOP OF CONCRETE BEAMS ARE FLUSH WITH TOP OF STRUCTURAL SLAB.
9. MARKS "B1" ETC INDICATE CONCRETE BEAMS. SEE BEAM SCHEDULE ON SHEET S5.40. SEE S5.41 FOR TYPICAL CONCRETE BEAM DETAILS
10. SLAB CAMBER SHOWN THUS: C="X" SEE DETAIL 3/S5.23. PROVIDE CAMBER PER 3/S5.23 UON
11. WALLS SHOWN ON PLAN ARE WALLS ABOVE. WALLS DASHED ARE WALLS BELOW. SEE WALL ELEVATION KEY.
12. FLOOR SHEATHING SHALL BE TYPE 2. SEE 8/S8.00 FOR SCHEDULE FOR PLYWOOD PROPERTIES SEE GENERAL NOTES.
13. ALL DIAPHRAGM, SHEAR WALL, AND SHEAR TRANSFER NAILING SHALL UTILIZE COMMON OR GALVANIZED BOX NAILS.
14. ALL BOLT HOLES SHALL BE DRILLED TO 1/32" OR 1/16" OVERSIZED.
15. ⊠ INDICATES WOOD POST PLACE 6X POST UNDER ALL 6X NOMINAL OR ENGINEERED BEAMS. PLACE 4X POST UNDER ALL 4X NOMINAL OR ENGINEERED BEAMS, UON.
16. HOLDOWN CONNECTIONS SHALL BE TIGHTENED JUST PRIOR TO COVERING THE WALL FRAMING.
17. FOR ADDITIONAL BEAMS SEE SHEAR WALL PLAN.
18. FOR STAIR DETAILS SEE S7.30, S7.31 AND S8.03.
19. FOR ELEVATOR DETAILS SEE S7.40.
20. ▭ INDICATES DEPRESSED SLAB PER ARCH'L
21. ▭ INDICATES WOOD SHEAR WALL. SEE S8.40
22. ▭ INDICATES WOOD BEARING WALL. SEE S8.30
23. MARKS J1, ETC DENOTE JOISTS PER 4/S8.20
24. MARKS H1, ETC DENOTE HEADERS PER DETAIL 4/S8.30

AXIS GFA
1130 WESTWOOD BLVD
LOS ANGELES, CA 90024
T 310.209.7520
F 310.209.7516
www.axisgfa.com

PROJECT NAME

Residence Inn® Marriott.

840 KILDARE STREET,
LANCASTER, CA

OWNER:

INSITE REAL STATE DEVELOPMENT
6265 VARIEL AVENUE
WOODLAND HILLS, CA 91367

Thornton Tomasetti
Thornton Tomasetti, Inc.
707 Wilshire Blvd, Suite 4450
Los Angeles, CA 90017-3618
T 213.330.7000 F 213.330.7001

Project Status

REGISTERED PROFESSIONAL ENGINEER
GARNER GANIRU FRANKLIN
No. S4416
Exp. 6/30/18
STRUCTURAL
STATE OF CALIFORNIA

NO.	DATE	ISSUES AND REVISIONS	BY
	10.13.17	DESIGN DEVELOPMENT	
	11.20.17	CD PROGRESS SET	
	12.18.17	PLAN CHECK	
	02.16.18	PLAN CHECK	

DATE
SCALE AS NOTED
PROJECT NUMBER
COMPUTER FILE S17081
PROJECT NAME

DESCRIPTION
ROOF FRAMING PLAN - A

SHEET NUMBER
S2.06A

ALL DRAWINGS AND WRITTEN MATERIAL APPEARING HEREIN CONSTITUTE ORIGINAL AND UNPUBLISHED WORK OF THE ARCHITECT AND MAY NOT BE DUPLICATED, USED OR DISCLOSED WITHOUT WRITTEN CONSENT OF THE ARCHITECT

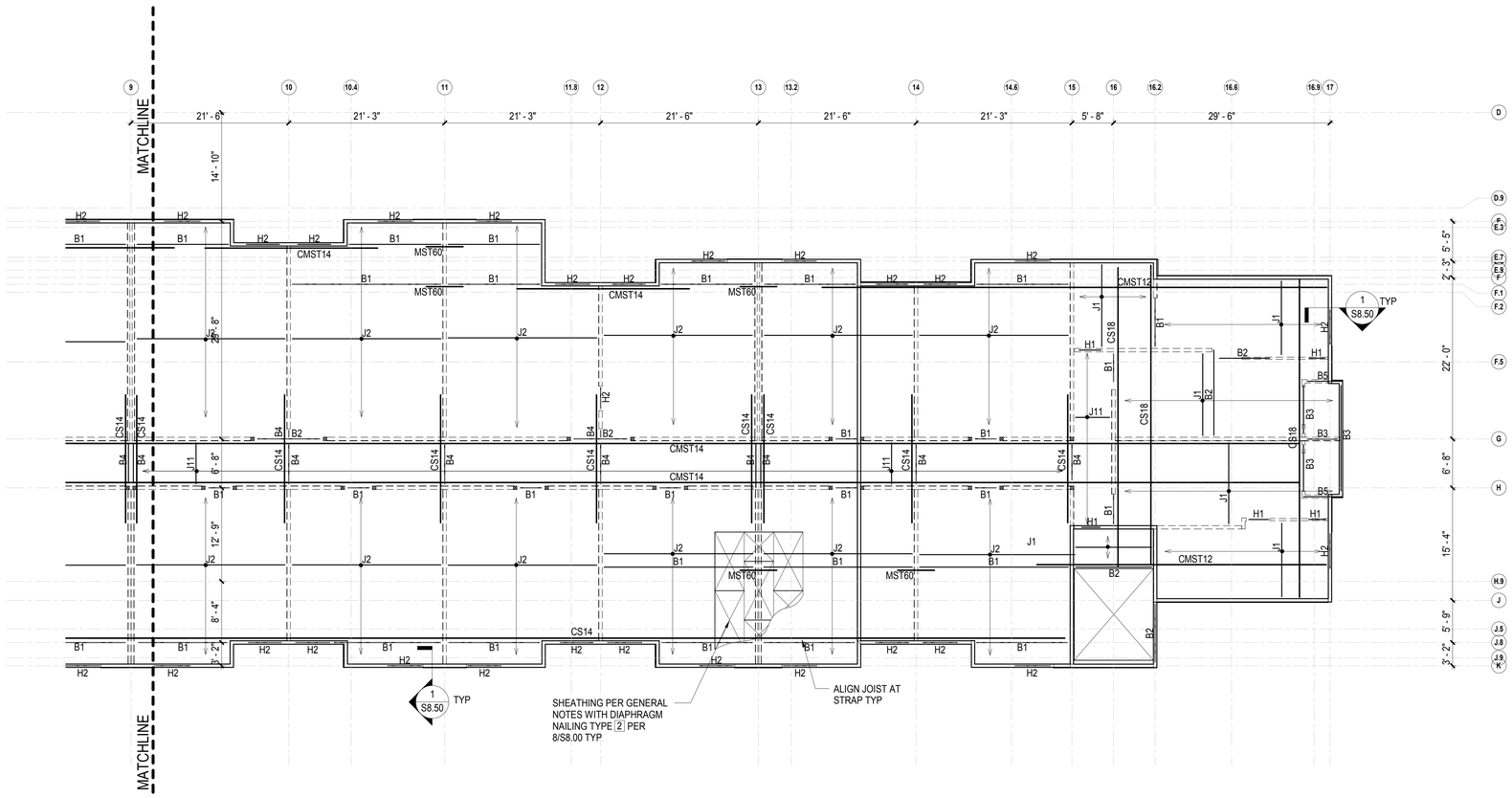

1 ROOF FRAMING PLAN - B

1/8" = 1'-0"

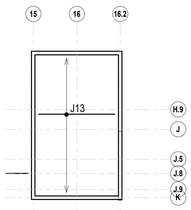

2 STAIR ROOF FRAMING PLAN

1/8" = 1'-0"

BEAM SCHEDULE	
B1	3 1/2X11 7/8 PSL
B2	5 1/4X11 7/8 PSL
B3	6X12
B4	4X8
B5	6X10
B6	7X11 7/8 PSL
SB1	HSS6X4X3/8

FLOOR FRAMING NOTES

1. SEE GENERAL NOTES ON SHEET S0.10 AND S0.11.
2. SEE TYPICAL CONCRETE DETAILS ON SHEET S5 SERIES.
3. VERIFY ALL DIMENSIONS AND ELEVATIONS WITH ARCHITECTURAL DRAWINGS
4. TOP OF SLAB ELEVATION IS CALLED OUT IN PLAN. RELATIVE SLAB ELEVATIONS WITH RESPECT TO SLAB REFERENCE ELEVATION ARE SHOWN THUS.
5. TOP OF STEEL BEAMS ARE SHOWN THUS: ON PLAN. ELEVATIONS SHOWN ARE GIVEN WITH REFERENCE TO NOMINAL FLOOR LINE.
6. DEPRESSIONS, CURBS AND OPENINGS SHOWN ON THIS PLAN ARE NOT COMPLETE AS TO NUMBER, SIZE, AND LOCATION. FOR COMPLETE INFORMATION, REFER TO DRAWINGS OTHER THAN STRUCTURAL.
7. EDGE OF SLAB LOCATIONS ARE APPROXIMATE, SEE ARCH DWGS FOR EDGE OF SLAB DIMENSIONS.
8. TOP OF CONCRETE BEAMS ARE FLUSH WITH TOP OF STRUCTURAL SLAB.
9. MARKS "B1" ETC INDICATE CONCRETE BEAMS. SEE BEAM SCHEDULE ON SHEET S5.40. SEE S5.41 FOR TYPICAL CONCRETE BEAM DETAILS
10. SLAB CAMBER SHOWN THUS: C="X" SEE DETAIL 3/S5.23. PROVIDE CAMBER PER 3/S5.23 UON
11. WALLS SHOWN ON PLAN ARE WALLS ABOVE. WALLS DASHED ARE WALLS BELOW. SEE WALL ELEVATION KEY.
12. FLOOR SHEATHING SHALL BE TYPE 2. SEE 8/S8.00 FOR SCHEDULE FOR PLYWOOD PROPERTIES SEE GENERAL NOTES.
13. ALL DIAPHRAGM, SHEAR WALL, AND SHEAR TRANSFER NAILING SHALL UTILIZE COMMON OR GALVANIZED BOX NAILS.
14. ALL BOLT HOLES SHALL BE DRILLED TO 1/32" OR 1/16" OVERSIZED.
15. ⊠ INDICATES WOOD POST PLACE 6X POST UNDER ALL 6X NOMINAL OR ENGINEERED BEAMS. PLACE 4X POST UNDER ALL 4X NOMINAL OR ENGINEERED BEAMS, UON.
16. HOLDOWN CONNECTIONS SHALL BE TIGHTENED JUST PRIOR TO COVERING THE WALL FRAMING.
17. FOR ADDITIONAL BEAMS SEE SHEAR WALL PLAN.
18. FOR STAIR DETAILS SEE S7.30, S7.31 AND S8.03.
19. FOR ELEVATOR DETAILS SEE S7.40.
20. ▭ INDICATES DEPRESSED SLAB PER ARCH'L
21. ▭ INDICATES WOOD SHEAR WALL. SEE S8.40
22. ▭ INDICATES WOOD BEARING WALL. SEE S8.30
23. MARKS J1, ETC DENOTE JOISTS PER 4/S8.20
24. MARKS H1, ETC DENOTE HEADERS PER DETAIL 4/S8.30

AXIS GFA
1130 WESTWOOD BLVD
LOS ANGELES, CA 90024
T 310.209.7520
F 310.209.7516
www.axisgfa.com

PROJECT NAME

Residence Inn® Marriott.

840 KILDARE STREET,
LANCASTER, CA

OWNER:

INSITE REAL STATE DEVELOPMENT
6265 VARIEL AVENUE
WOODLAND HILLS, CA 91367

Thornton Tomasetti
Thornton Tomasetti, Inc.
707 Wilshire Blvd, Suite 4450
Los Angeles, CA 90017-3618
T 213.330.7000 F 213.330.7001

Project Status

REGISTERED PROFESSIONAL ENGINEER CHARAN K. GANTRI No. S4416 Exp. 6/30/18 STRUCTURAL STATE OF CALIFORNIA

NO.	DATE	ISSUES AND REVISIONS	BY
		10.13.17 DESIGN DEVELOPMENT	
		11.20.17 CD PROGRESS SET	
		12.18.17 PLAN CHECK	
		02.16.18 PLAN CHECK	

DATE

SCALE AS NOTED

PROJECT NUMBER

COMPUTER FILE S17081

PROJECT NAME

DESCRIPTION
ROOF FRAMING PLAN - B

SHEET NUMBER
S2.06B

ALL DRAWINGS AND WRITTEN MATERIAL APPEARING HEREIN CONSTITUTE ORIGINAL AND UNPUBLISHED WORK OF THE ARCHITECT AND MAY NOT BE DUPLICATED, USED OR DISCLOSED WITHOUT WRITTEN CONSENT OF THE ARCHITECT

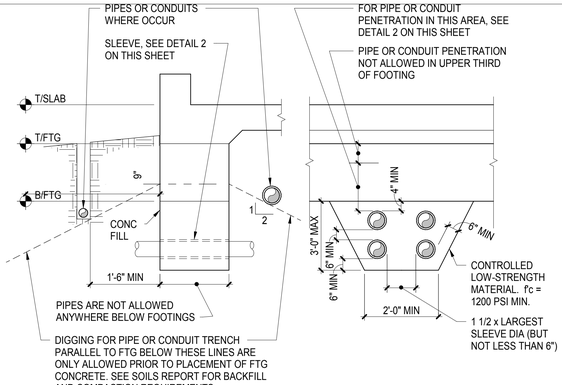

NOTES:
1. CONTRACTOR SHALL BE RESPONSIBLE FOR SHORING OR OTHERWISE MAINTAINING THE SIDES OF THE EXCAVATION FROM CAVE-IN UNTIL ALL BACKFILL IS COMPLETED.
2. ALL PIPES AND CONDUITS SHALL CLEAR SLEEVE BY 1" ALL AROUND, UON
3. FIRE SERVICE LINES SHALL CLEAR SLEEVES 2" ALL AROUND.
4. TRENCHES FOR PIPES AND CONDUITS WITH INVERT ELEVATION BELOW 2'-6" FROM BOTTOM OF FOOTING SHALL BE FILLED PER GEOTECHNICAL ENGINEER'S RECOMMENDATIONS.
5. CAULK SEAL GAP AT SLEEVE-TO-PIPE/CONDUIT INTERFACE ON EXTERIOR SIDE OF FOOTING.

1 PIPE OR CONDUIT CLEARANCE AT FOOTINGS
1" = 1'-0"

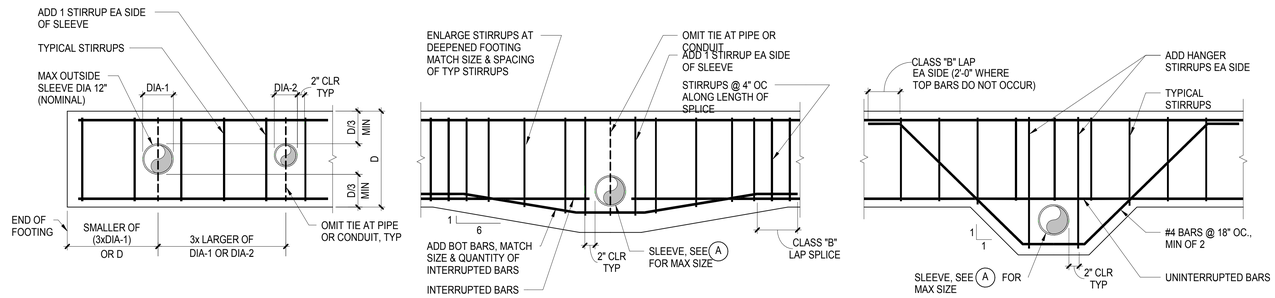

A PIPE OR CONDUIT PENETRATION THRU MIDDLE THIRD

B PIPE OR CONDUIT PENETRATION BELOW MIDDLE THIRD

C PIPE OR CONDUIT BELOW BOTTOM REINFORCEMENT

NOTES:
1. DO NOT CUT REINFORCING AT A OR C . ONLY CUT INTERRUPTED REINFORCING AT B .
2. PROVIDE MINIMUM 2" CLEAR BETWEEN SLEEVE AND REINFORCING.
3. SEE DETAIL 1 ON THIS SHEET FOR SLEEVE-TO-PIPE/CONDUIT CLEARANCE & INFO NOT NOTED.
4. CAULK SEAL GAP AT SLEEVE-TO-PIPE/CONDUIT INTERFACE ON EXTERIOR SIDE OF FOOTING.
5. IF PIPE OR CONDUIT PENETRATION OCCURS AT EITHER TOP OR BOTTOM REBAR SPLICE LOCATION PROVIDE 2 ADDITIONAL SHEAR STIRRUPS FOR A TOTAL OF 4 SHEAR STIRRUPS ON EACH SIDE OF PENETRATION.
6. IF PIPE OR CONDUIT SLEEVE IS ASTM A53 SCHEDULE 40 OR GREATER PIPE, ADDITIONAL STIRRUPS MAY BE ELIMINATED. SLEEVE SHALL BE GALVANIZED.

2 PIPE OR CONDUIT PENETRATIONS THRU CONTINUOUS FOOTINGS
NOT TO SCALE

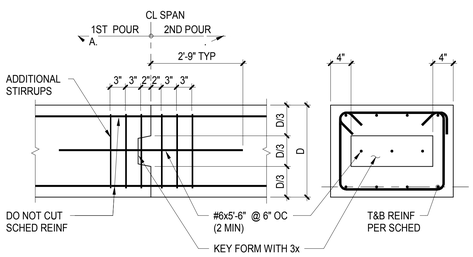

3 VERTICAL CONSTRUCTION JOINTS IN FOOTINGS
NOT TO SCALE

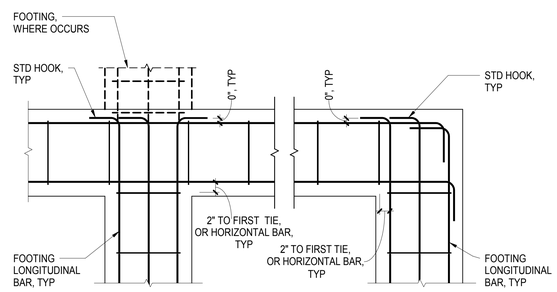

PLAN

4 CONTINUOUS FOOTING INTERSECTIONS
NOT TO SCALE

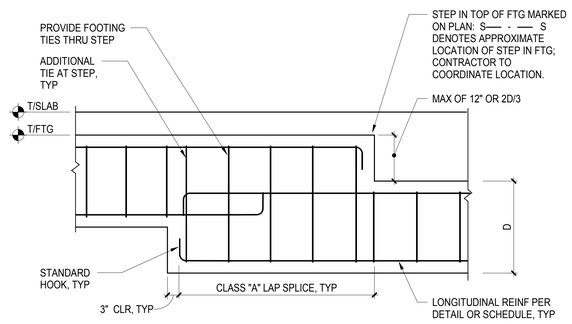

5 SINGLE STEP IN FOOTING
NOT TO SCALE

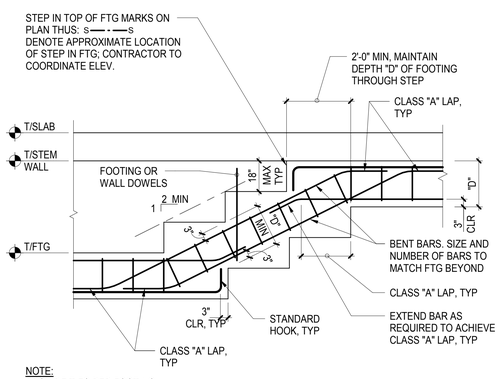

NOTE:
PROVIDE TIES PER FOOTING SCHEDULE THROUGH FOOTING STEPS AS SHOWN.

6 STEPS IN CONTINUOUS FOOTING
NOT TO SCALE

AXIS GFA
1130 WESTWOOD BLVD
LOS ANGELES, CA 90024
T 310.209.7520
F 310.209.7516
www.axisgfa.com

PROJECT NAME

Residence Inn® Marriott.

840 KILDARE STREET,
LANCASTER, CA

OWNER:

INSITE REAL STATE DEVELOPMENT
6265 VARIEL AVENUE
WOODLAND HILLS, CA 91367

Thornton Tomasetti
Thornton Tomasetti, Inc.
707 Wilshire Blvd, Suite 4450
Los Angeles, CA 90017-3618
T 213.330.7000 F 213.330.7001

Project Status

REGISTERED PROFESSIONAL ENGINEER
CHAKAR QUATRO, CHARLES
No. S4416
Exp. 6/30/18
STRUCTURAL
STATE OF CALIFORNIA

NO.	DATE	ISSUES AND REVISIONS	BY
	10.13.17	DESIGN DEVELOPMENT	
	11.20.17	CD PROGRESS SET	
	12.18.17	PLAN CHECK	
	02.16.18	PLAN CHECK	

DATE

SCALE AS NOTED

PROJECT NUMBER

COMPUTER FILE S17081

PROJECT NAME

DESCRIPTION
TYPICAL FOUNDATION DETAILS

SHEET NUMBER
S4.00

ALL DRAWINGS AND WRITTEN MATERIAL APPEARING HEREIN CONSTITUTE ORIGINAL AND UNPUBLISHED WORK OF THE ARCHITECT AND MAY NOT BE DUPLICATED, USED OR DISCLOSED WITHOUT WRITTEN CONSENT OF THE ARCHITECT

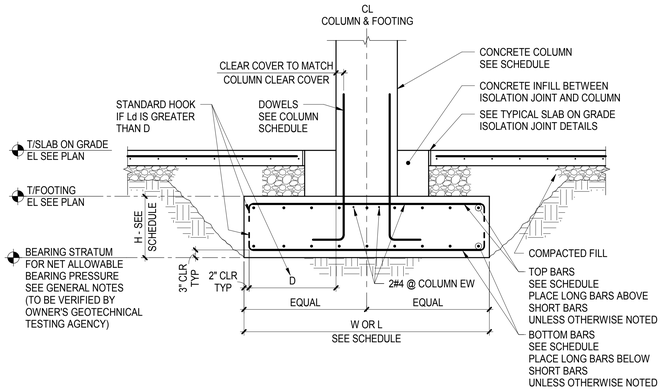

1 TYPICAL ISOLATED FOOTING - CONCRETE COLUMN
NOT TO SCALE

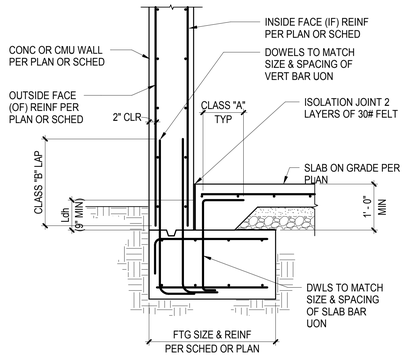

2 TYPICAL EXTERIOR CONCRETE OR CMU WALL FOOTING
NOT TO SCALE

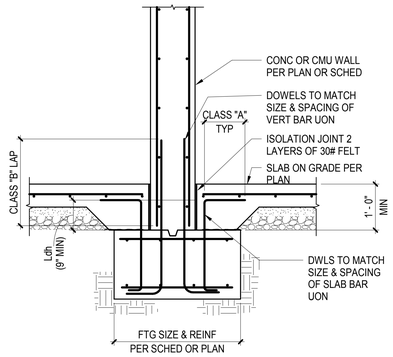

3 TYPICAL INTERIOR CONCRETE OR CMU WALL FOOTING
NOT TO SCALE

SPREAD FOOTING SCHEDULE				
MARK	SIZE B x W	DEPTH	REINFORCING	COMMENTS
F1	PER PLAN	30"	REINFORCING PER PLAN	
F2	PER PLAN	36"	REINFORCING PER PLAN	
F3	SEE FOUNDATION PLAN	24"	#8@6" N-S, #8@12" E-W BOTT #5@6" N-S, #5@12" E-W TOP	
F8	8'-0"X8'-0"	18"	8#6 EW BOTTOM	
F10	10'-0"X10'-0"	18"	10#7 EW BOTTOM	
F12	12'-0"X12'-0"	24"	12#8 EW BOTTOM	
F14	14'-0"X14'-0"	24"	14#8 EW BOTTOM	
F15	15'-0"X15'-0"	30"	20#7 EW BOTTOM	

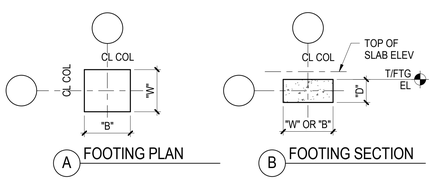

4 SPREAD FOOTING SCHEDULE
NOT TO SCALE

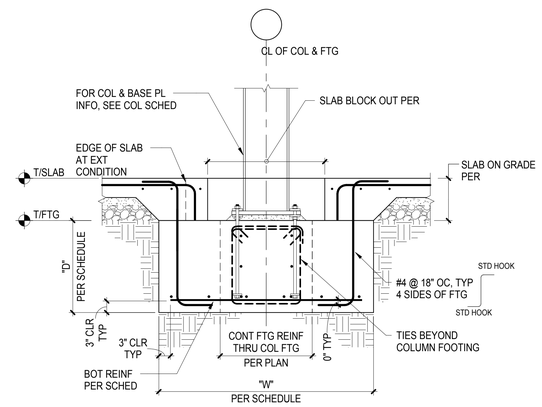

NOTE:
PROVIDE 6" MIN CONCRETE COVER OVER COLUMN, BASE PL & ANCHOR RODS BELOW GRADE, TYP.

6 COLUMN FOOTING
NOT TO SCALE

AXIS GFA
1130 WESTWOOD BLVD
LOS ANGELES, CA 90024
T 310.209.7520
F 310.209.7516
www.axisgfa.com

PROJECT NAME

Residence Inn® Marriott.

840 KILDARE STREET,
LANCASTER, CA

OWNER:

INSITE REAL STATE
DEVELOPMENT
6265 VARIEL AVENUE
WOODLAND HILLS, CA 91367

Thornton Tomasetti
Thornton Tomasetti, Inc.
707 Wilshire Blvd, Suite 4450
Los Angeles, CA 90017-3618
T 213.330.7000 F 213.330.7001

Project Status

REGISTERED PROFESSIONAL ENGINEER
CHANDAN GANTRU, ENGINEER
No. S4416
Exp. 6/30/18
STRUCTURAL
STATE OF CALIFORNIA

NO.	DATE	ISSUES AND REVISIONS	BY
		10.13.17 DESIGN DEVELOPMENT	
		11.20.17 CD PROGRESS SET	
		12.18.17 PLAN CHECK	
		02.16.18 PLAN CHECK	

DATE

SCALE AS NOTED

PROJECT NUMBER

COMPUTER FILE S17081

PROJECT NAME

DESCRIPTION
TYPICAL FOUNDATION DETAILS

SHEET NUMBER
S4.01

ALL DRAWINGS AND WRITTEN MATERIAL APPEARING HEREIN CONSTITUTE ORIGINAL AND UNPUBLISHED WORK OF THE ARCHITECT AND MAY NOT BE DUPLICATED, USED OR DISCLOSED WITHOUT WRITTEN CONSENT OF THE ARCHITECT

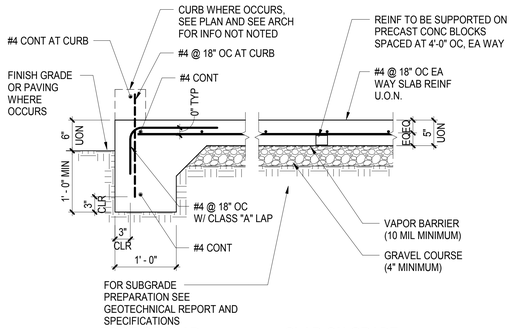

A EDGE OF SLAB

B SLAB-ON-GRADE

1 TYPICAL SLAB-ON-GRADE DETAIL

NOT TO SCALE

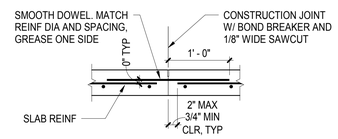

B CONSTRUCTION JOINT, SLAB-ON-GRADE < 5" THICK

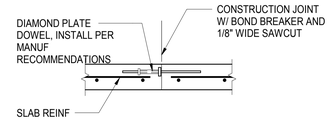

C CONSTRUCTION JOINT, SLAB-ON-GRADE ≥ 5" THICK

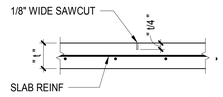

A CONTROL JOINT

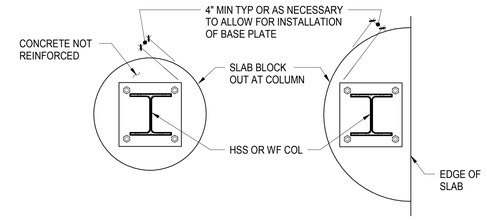

D PLAN - SLAB BLOCKOUT AT COLUMN

E PLAN - SLAB BLOCKOUT AT EDGE COLUMN

EITHER CONTROL OR CONSTRUCTION JOINTS SHALL BE LOCATED NO FURTHER THAN 36 x SLAB THICKNESS UNLESS A SMALLER SPACING IS INDICATED ON DRAWINGS. ASPECT RATIO OF ENCLOSED AREA SHALL NOT EXCEED 1.5. SUBMIT LAYOUT FOR APPROVAL. LOCATE JOINTS ON COLUMN LINES AND UNDER PARTITIONS WHEREVER POSSIBLE. MAXIMUM SLAB AREA CONTROLLED BY JOINTING IS 400 SQ FT. SAWCUTS SHALL BE MADE AS SOON AS POSSIBLE AFTER SLAB FINISHING AS MAY SAFELY BE DONE WITHOUT DISLODGING AGGREGATE OR BREAKING EDGES. FILL SAWCUT JOINT WITH SEALANT AFTER SLAB HAS CURED.

F JOINT LAYOUT

2 TYPICAL SLAB-ON-GRADE CONSTRUCTION AND CONTROL JOINTS AND SLAB BLOCKOUTS

NOT TO SCALE

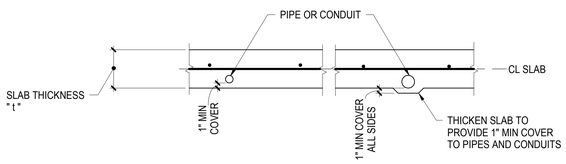

B SECTION - EMBEDDED IN SLAB

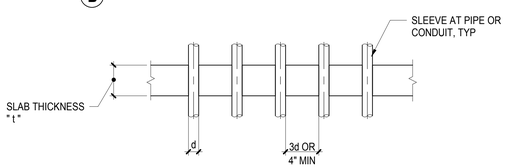

A SECTION - PENETRATION THROUGH SLAB

NOTES:
1. DO NOT CUT REINFORCING.
2. IF 4" MINIMUM CLEAR DISTANCE BETWEEN PENETRATIONS IS NOT POSSIBLE, THEN CONDITION SHALL BE TREATED AS A SLAB OPENING PER DETAIL 6/S4.10
3. USE OF ALUMINUM CONDUIT IN CONTACT WITH CONCRETE IS PROHIBITED.
4. COORDINATE PENETRATION SIZE WITH PIPE/CONDUIT SIZE AND SLEEVE SIZE.

4 TYPICAL PIPE OR CONDUIT PENETRATIONS THROUGH SLAB-ON-GRADE

NOT TO SCALE

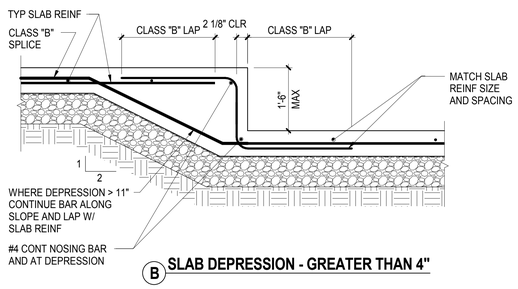

B SLAB DEPRESSION - GREATER THAN 4"

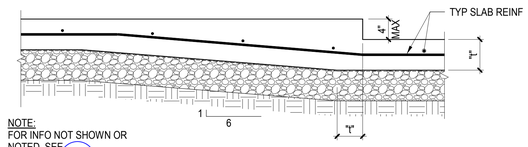

NOTE:
FOR INFO NOT SHOWN OR NOTED, SEE 1/S4.10

A SLAB DEPRESSION - 4" OR LESS

5 TYPICAL SLAB-ON-GRADE DEPRESSION

NOT TO SCALE

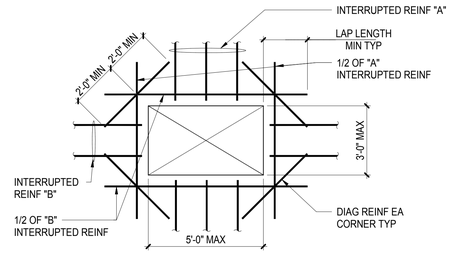

PLAN

NOTES:
1. OPENING SIZE, LOCATION, AND REINFORCING SHALL BE SUBMITTED AS PART OF THE REINFORCING SHOP DRAWING SUBMITTAL FOR REVIEW AND APPROVAL.
2. AT EACH SIDE OF THE OPENING, ADD NOT LESS THAN ONE-HALF THE AREA OF REINFORCING THAT IS INTERRUPTED BY THE OPENING. WHERE THE BAR LENGTH PAST THE OPENING IS INTERRUPTED BY AN EDGE OF SLAB, PROVIDE A STANDARD HOOK AT THE DISCONTINUOUS END.
3. WHERE THE DIAGONAL LENGTH IS INTERRUPTED BY AN EDGE OF SLAB, PROVIDE A STANDARD HOOK.
4. NOT REQUIRED AT COLUMN LOCATIONS.

SCHEDULE OF DIAGONAL REINFORCING

SLAB THICKNESS	DIAGONAL REINF EA CORNER	COMMENT
4" TO 5"	1-#4	CENTERED IN SLAB
>5" TO 8"	1-#5	CENTERED IN SLAB
>8" TO 12"	1-#5	T&B IN SLAB

6 TYPICAL OPENING IN SLAB-ON-GRADE

NOT TO SCALE

AXIS GFA
1130 WESTWOOD BLVD
LOS ANGELES, CA 90024
T 310.209.7520
F 310.209.7516
www.axisgfa.com

PROJECT NAME

Residence Inn® Marriott.

840 KILDARE STREET,
LANCASTER, CA

OWNER:

INSITE REAL STATE DEVELOPMENT
6265 VARIEL AVENUE
WOODLAND HILLS, CA 91367

Thornton Tomasetti
Thornton Tomasetti, Inc.
707 Wilshire Blvd, Suite 4450
Los Angeles, CA 90017-3618
T 213.330.7000 F 213.330.7001

Project Status

REGISTERED PROFESSIONAL ENGINEER
STEPHANIE GRANTRO, EMILIANO
No. S4416
Exp. 6/30/18
STRUCTURAL
STATE OF CALIFORNIA

NO.	DATE	ISSUES AND REVISIONS	BY
	10.13.17	DESIGN DEVELOPMENT	
	11.20.17	CD PROGRESS SET	
	12.18.17	PLAN CHECK	
	02.16.18	PLAN CHECK	

DATE

SCALE AS NOTED

PROJECT NUMBER

COMPUTER FILE S17081

PROJECT NAME

DESCRIPTION
TYPICAL SLAB-ON-GRADE DETAILS

SHEET NUMBER
S4.10

ALL DRAWINGS AND WRITTEN MATERIAL APPEARING HEREIN CONSTITUTE ORIGINAL AND UNPUBLISHED WORK OF THE ARCHITECT AND MAY NOT BE DUPLICATED, USED OR DISCLOSED WITHOUT WRITTEN CONSENT OF THE ARCHITECT

NOTE: AT CONTRACTOR'S OPTION ADD CURBS OR PADS PER 2/S4.11

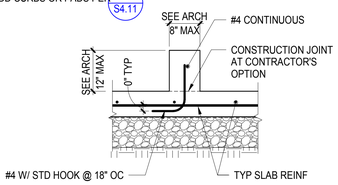

B CURB AT SLAB-ON-GRADE

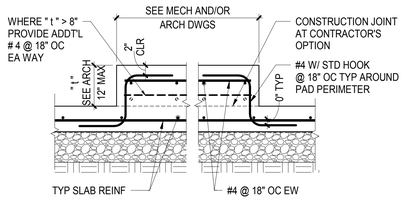

A HOUSEKEEPING PAD AT SLAB-ON-GRADE

1 TYPICAL CURBS AND HOUSEKEEPING PADS
1" = 1'-0"

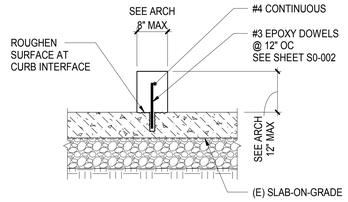

B CURB AT (E) SLAB-ON-GRADE

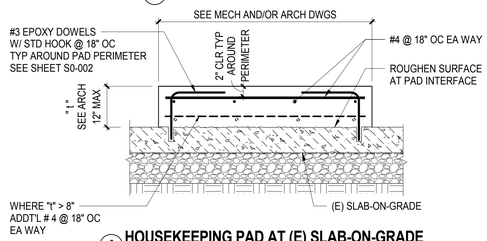

A HOUSEKEEPING PAD AT (E) SLAB-ON-GRADE

2 TYPICAL CURBS AND HOUSEKEEPING PADS AT (E) SLAB-ON-GRADE
1" = 1'-0"

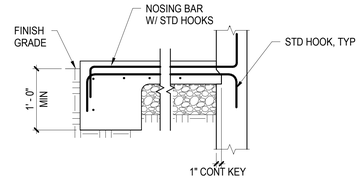

AT EDGE AT WALL

SECTION

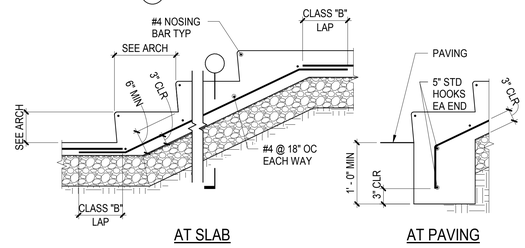

AT SLAB AT PAVING

3 TYPICAL STAIR-ON-GRADE
1" = 1'-0"

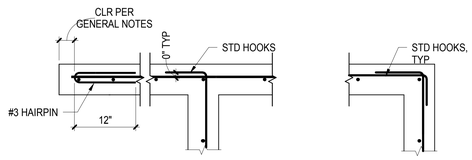

A PLAN-ONE CURTAINS REINF

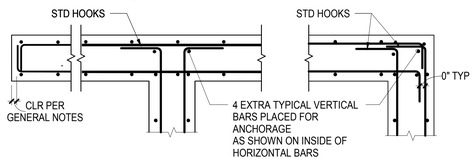

B PLAN-TWO CURTAINS REINF

4 TYPICAL CURB INTERSECTIONS
1" = 1'-0"

AXIS GFA
1130 WESTWOOD BLVD
LOS ANGELES, CA 90024
T 310.209.7520
F 310.209.7516
www.axisgfa.com

PROJECT NAME

Residence Inn® Marriott.

840 KILDARE STREET,
LANCASTER, CA

OWNER:

INSITE REAL STATE DEVELOPMENT
6265 VARIEL AVENUE
WOODLAND HILLS, CA 91367

Thornton Tomasetti
Thornton Tomasetti, Inc.
707 Wilshire Blvd, Suite 4450
Los Angeles, CA 90017-3618
T 213.330.7000 F 213.330.7001

Project Status

REGISTERED PROFESSIONAL ENGINEER
CONRADO GANTRIO TORRES
No. S4416
Exp. 6/30/18
STRUCTURAL
STATE OF CALIFORNIA

NO.	DATE	ISSUES AND REVISIONS	BY
		10.13.17 DESIGN DEVELOPMENT	
		11.20.17 CD PROGRESS SET	
		12.18.17 PLAN CHECK	
		02.16.18 PLAN CHECK	

DATE

SCALE AS NOTED

PROJECT NUMBER

COMPUTER FILE S17081

PROJECT NAME

DESCRIPTION
TYPICAL SLAB-ON-GRADE DETAILS

SHEET NUMBER
S4.11

ALL DRAWINGS AND WRITTEN MATERIAL APPEARING HEREIN CONSTITUTE ORIGINAL AND UNPUBLISHED WORK OF THE ARCHITECT AND MAY NOT BE DUPLICATED, USED OR DISCLOSED WITHOUT WRITTEN CONSENT OF THE ARCHITECT

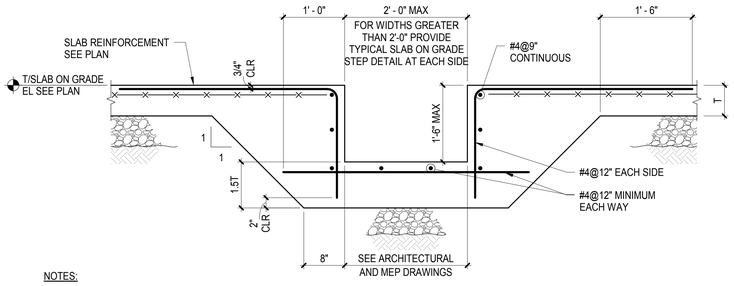

NOTES:

1. COORDINATE WITH ARCHITECTURE AND MEP DRAWINGS FOR ADDITIONAL INFORMATION AND EMBEDMENTS

2. SEE TYPICAL SLAB ON GRADE DETAILS FOR ADDITIONAL INFORMATION

1 TYPICAL TRENCH AT SLAB ON GRADE

NOT TO SCALE

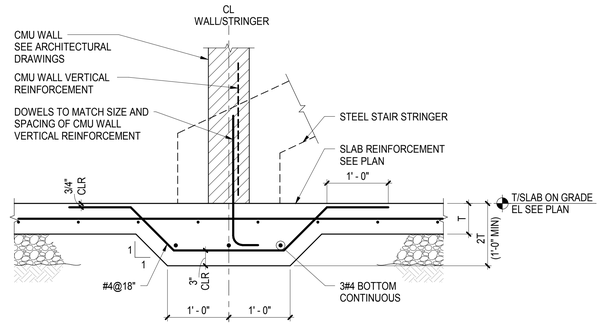

NOTES:

1. SEE ARCHITECTURAL DRAWINGS FOR LOCATIONS OF WALLS AND STAIRS

2. SEE TYPICAL SLAB ON GRADE DETAILS FOR MORE INFORMATION

2 TYPICAL THICKENED SLAB ON GRADE AT NON-BEARING CMU WALL OR STAIR STRINGER

NOT TO SCALE

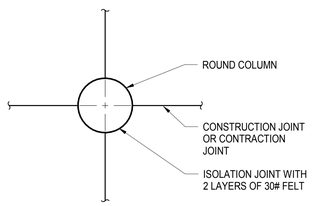

ROUND COLUMN

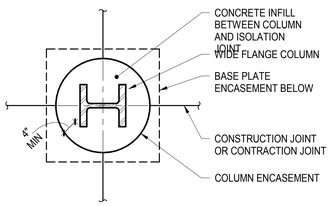

CONCRETE ENCASED COLUMN AND BASE PLATE WHERE INDICATED ON PLAN

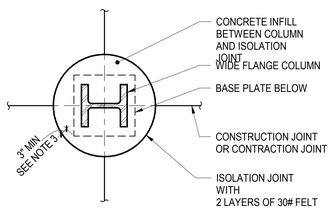

TYPICAL BASE PLATE WITHIN CONCRETE INFILL (ROUND ISOLATION JOINT OPTION)

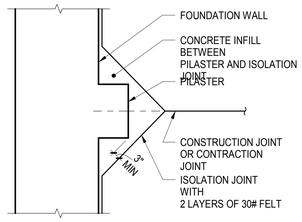

PILASTER

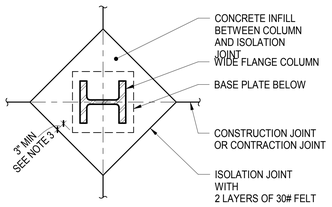

TYPICAL BASE PLATE WITHIN CONCRETE INFILL UNLESS OTHERWISE NOTED

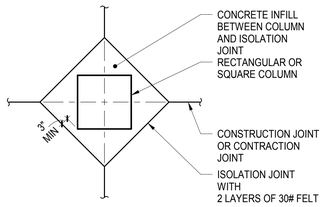

RECTANGULAR OR SQUARE COLUMN

NOTES:

1. SEE TYPICAL SLAB ON GRADE DETAILS FOR JOINT SPACING REQUIREMENTS

2. CONCRETE INFILL BETWEEN COLUMN AND ISOLATION JOINT TO BE POURED AFTER ALL THE SLABS SUPPORTED BY THE COLUMN HAVE BEEN POURED

3. PROVIDE ADDITIONAL CLEARANCE AS REQUIRED TO ENSURE 3" MINIMUM CONCRETE COVER OVER BASE PLATE AND ANCHOR RODS BELOW.

3 TYPICAL ISOLATION JOINT DETAILS AT SLAB ON GRADE

NOT TO SCALE

AXIS GFA

1130 WESTWOOD BLVD
LOS ANGELES, CA 90024
T 310.209.7520
F 310.209.7516
www.axisgfa.com

PROJECT NAME

Residence Inn® Marriott.

840 KILDARE STREET,
LANCASTER, CA

OWNER:

INSITE REAL STATE DEVELOPMENT
6265 VARIEL AVENUE
WOODLAND HILLS, CA 91367

Thornton Tomasetti

Thornton Tomasetti, Inc.
707 Wilshire Blvd, Suite 4450
Los Angeles, CA 90017-3618
T 213.330.7000 F 213.330.7001

Project Status

REGISTERED PROFESSIONAL ENGINEER
CHANDAN GANTRO, EDWARD
No. S4416
Exp. 6/30/18
STRUCTURAL
STATE OF CALIFORNIA

NO.	DATE	ISSUES AND REVISIONS	BY
	10.13.17	DESIGN DEVELOPMENT	
	11.20.17	CD PROGRESS SET	
	12.18.17	PLAN CHECK	
	02.16.18	PLAN CHECK	

DATE

SCALE AS NOTED

PROJECT NUMBER

COMPUTER FILE S17081

PROJECT NAME

DESCRIPTION
TYPICAL SLAB-ON-GRADE DETAILS

SHEET NUMBER
S4.12

ALL DRAWINGS AND WRITTEN MATERIAL APPEARING HEREIN CONSTITUTE ORIGINAL AND UNPUBLISHED WORK OF THE ARCHITECT AND MAY NOT BE DUPLICATED, USED OR DISCLOSED WITHOUT WRITTEN CONSENT OF THE ARCHITECT

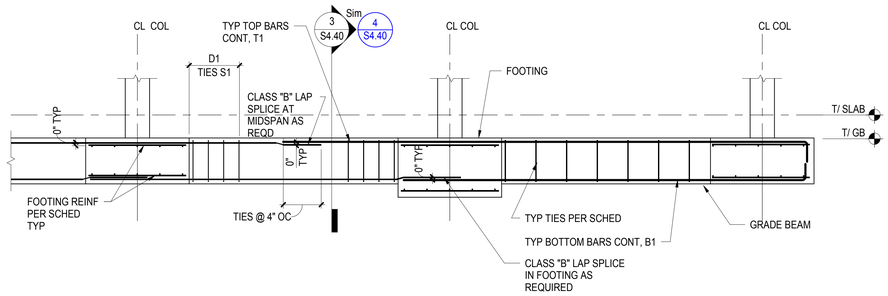

NOTES:
1. FIRST TIE AT THE SUPPORT SHALL BE PLACED NO MORE THAN 2" FROM FACE OF SUPPORT.
2. ALL TIES NOT SHOWN FOR CLARITY.

1 GRADE BEAM REINFORCING ELEVATION
NOT TO SCALE

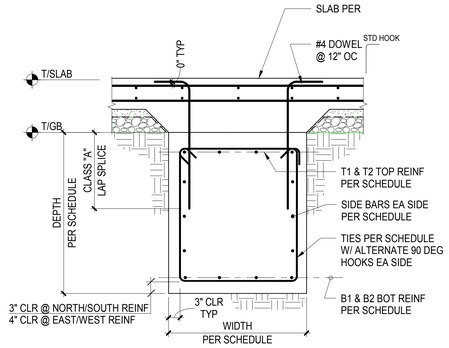

3 INTERIOR GRADE BEAM
NOT TO SCALE

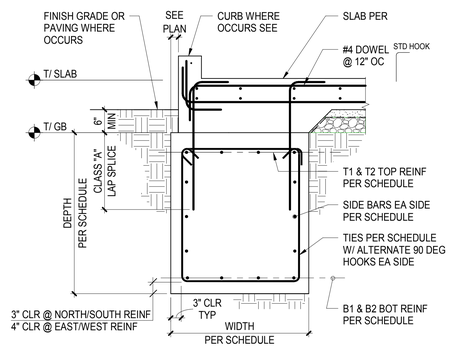

4 EXTERIOR GRADE BEAM
NOT TO SCALE

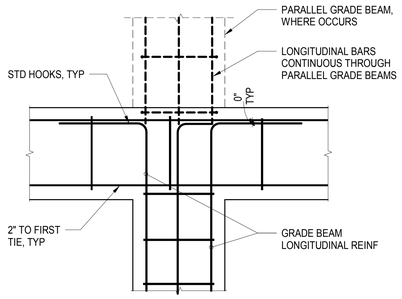

5 GRADE BEAM INTERSECTIONS
NOT TO SCALE

NOTE:
FOR SLAB DEPRESSION INFO, SEE

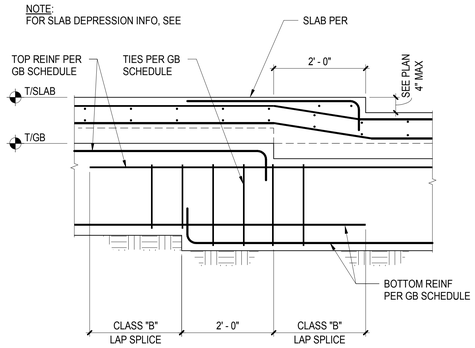

6 GRADE BEAM AT SLAB DEPRESSION
NOT TO SCALE

GRADE BEAM SCHEDULE											
MARK	SIZE		LONGITUDINAL REINFORCEMENT					TRANSVERSE REINFORCEMENT			DETAIL
			TOP		BOTTOM		SIDE BARS (EA SIDE)	TIES	ADDITIONAL TIES		
	WIDTH	DEPTH	T1	T2	B1	B2			D1	S1	
GB1	24"	24"	5#8	-	5#8	-	-	#4@8"	-	-	3 S4.40
-	-	-	-	-	-	-	-	-	-	-	-
-	-	-	-	-	-	-	-	-	-	-	-

NOTES:
1. FOR DETAILS AT CORNERS AND INTERSECTIONS OF GRADE BEAMS, SEE 5 S4.40
2. WHERE GRADE BEAM INTERSECTS PILE CAPS, EXTEND LONGITUDINAL REINFORCING THROUGH THE PILE CAP.
3. SEE TYPICAL GRADE BEAM ELEVATION 1 S4.40.

9 GRADE BEAM SCHEDULE
NOT TO SCALE

AXIS GFA
1130 WESTWOOD BLVD
LOS ANGELES, CA 90024
T 310.209.7520
F 310.209.7516
www.axisgfa.com

PROJECT NAME

Residence Inn® Marriott.

840 KILDARE STREET,
LANCASTER, CA

OWNER:

INSITE REAL STATE DEVELOPMENT
6265 VARIEL AVENUE
WOODLAND HILLS, CA 91367

Thornton Tomasetti
Thornton Tomasetti, Inc.
707 Wilshire Blvd, Suite 4450
Los Angeles, CA 90017-3618
T 213.330.7000 F 213.330.7001

Project Status

REGISTERED PROFESSIONAL ENGINEER
GOKHAN GANTRU DRAKER
No. S4416
Exp. 6/30/18
STRUCTURAL
STATE OF CALIFORNIA

NO.	DATE	ISSUES AND REVISIONS	BY
	10.13.17	DESIGN DEVELOPMENT	
	11.20.17	CD PROGRESS SET	
	12.18.17	PLAN CHECK	
	02.16.18	PLAN CHECK	

DATE
SCALE AS NOTED
PROJECT NUMBER
COMPUTER FILE S17081
PROJECT NAME

DESCRIPTION
TYPICAL GRADE BEAM DETAILS

SHEET NUMBER
S4.40

ALL DRAWINGS AND WRITTEN MATERIAL APPEARING HEREIN CONSTITUTE ORIGINAL AND UNPUBLISHED WORK OF THE ARCHITECT AND MAY NOT BE DUPLICATED, USED OR DISCLOSED WITHOUT WRITTEN CONSENT OF THE ARCHITECT

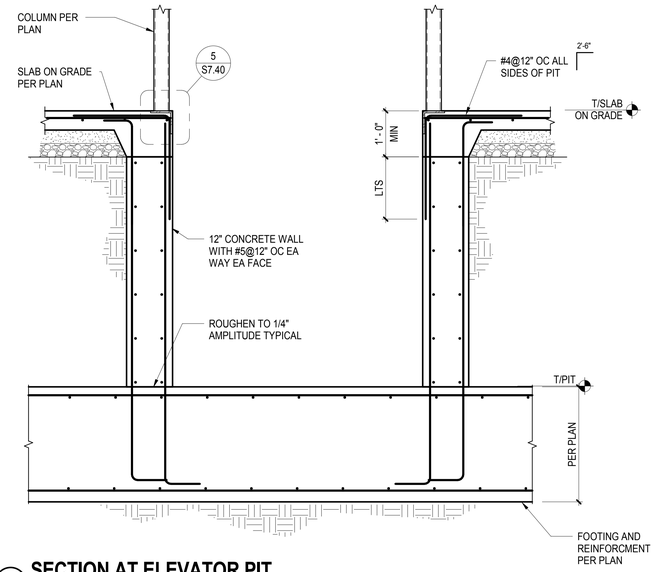

1 SECTION AT ELEVATOR PIT
3/4" = 1'-0"

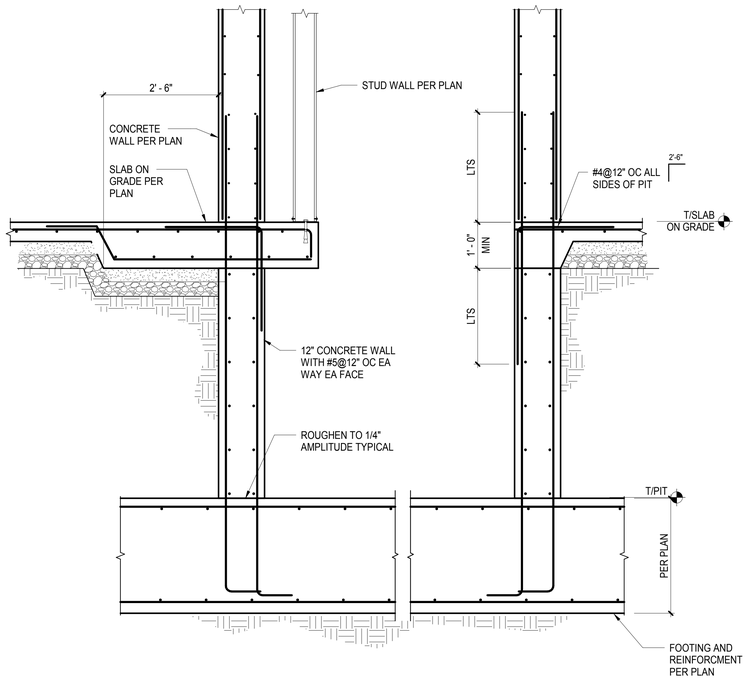

2 SECTION AT ELEVATOR PIT
3/4" = 1'-0"

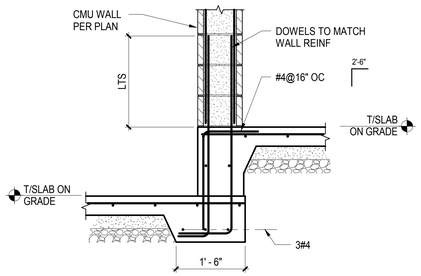

3 SECTION
3/4" = 1'-0"

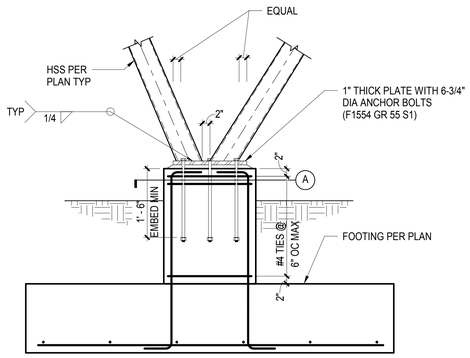

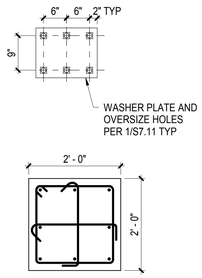

SECTION A

4 SECTION
3/4" = 1'-0"

AXIS GFA

1130 WESTWOOD BLVD
LOS ANGELES, CA 90024
T 310.209.7520
F 310.209.7516
www.axisgfa.com

PROJECT NAME

Residence Inn® Marriott.

840 KILDARE STREET,
LANCASTER, CA

OWNER:

INSITE REAL STATE DEVELOPMENT
6265 VARIEL AVENUE
WOODLAND HILLS, CA 91367

Thornton Tomasetti
Thornton Tomasetti, Inc.
707 Wilshire Blvd, Suite 4450
Los Angeles, CA 90017-3618
T 213.330.7000 F 213.330.7001

Project Status

REGISTERED PROFESSIONAL ENGINEER
CHANDAN GANTRU DRAKER
No. S4416
Exp. 6/30/18
STRUCTURAL
STATE OF CALIFORNIA

NO.	DATE	ISSUES AND REVISIONS	BY
	10.13.17	DESIGN DEVELOPMENT	
	11.20.17	CD PROGRESS SET	
	12.18.17	PLAN CHECK	
	02.16.18	PLAN CHECK	

DATE

SCALE AS NOTED

PROJECT NUMBER

COMPUTER FILE **S17081**

PROJECT NAME

DESCRIPTION
FOUNDATION DETAILS

SHEET NUMBER
S4.50

ALL DRAWINGS AND WRITTEN MATERIAL APPEARING HEREIN CONSTITUTE ORIGINAL AND UNPUBLISHED WORK OF THE ARCHITECT AND MAY NOT BE DUPLICATED, USED OR DISCLOSED WITHOUT WRITTEN CONSENT OF THE ARCHITECT

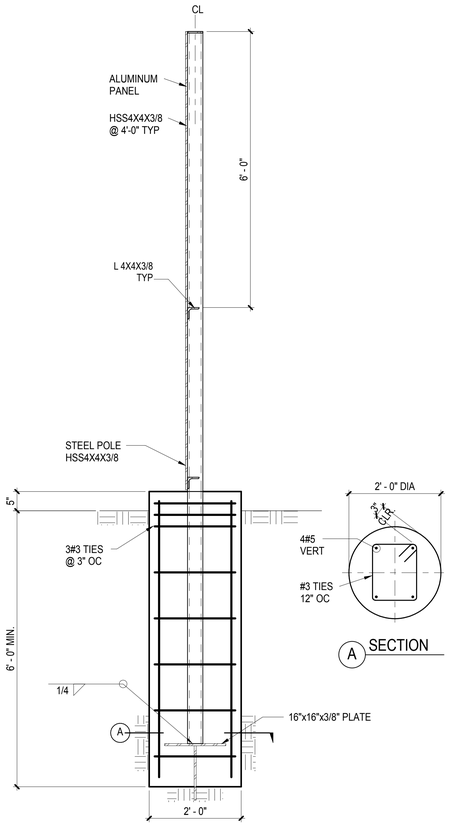

1 PARKING SCREEN DETAIL
3/4" = 1'-0"

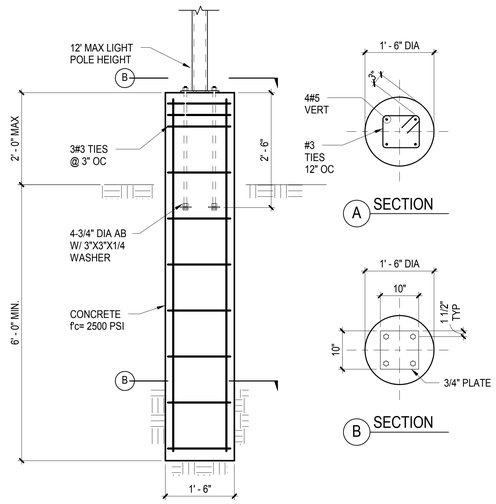

2 STEEL POLE FOOTING
3/4" = 1'-0"

AXIS GFA
1130 WESTWOOD BLVD
LOS ANGELES, CA 90024
T 310.209.7520
F 310.209.7516
www.axisgfa.com

PROJECT NAME

Residence Inn® Marriott.

840 KILDARE STREET,
LANCASTER, CA

OWNER:

INSITE REAL STATE
DEVELOPMENT
6265 VARIEL AVENUE
WOODLAND HILLS, CA 91367

Thornton Tomasetti
Thornton Tomasetti, Inc.
707 Wilshire Blvd, Suite 4450
Los Angeles, CA 90017-3618
T 213.330.7000 F 213.330.7001

Project Status

REGISTERED PROFESSIONAL ENGINEER
CHANDAN GANJIRU
No. S4416
Exp. 6/30/18
STRUCTURAL
STATE OF CALIFORNIA

NO.	DATE	ISSUES AND REVISIONS	BY
	10.13.17	DESIGN DEVELOPMENT	
	11.20.17	CD PROGRESS SET	
	12.18.17	PLAN CHECK	
	02.16.18	PLAN CHECK	

DATE

SCALE AS NOTED

PROJECT NUMBER

COMPUTER FILE **S17081**

PROJECT NAME

DESCRIPTION
FOUNDATION DETAILS

SHEET NUMBER
S4.51

ALL DRAWINGS AND WRITTEN MATERIAL APPEARING HEREIN CONSTITUTE ORIGINAL AND UNPUBLISHED WORK OF THE ARCHITECT AND MAY NOT BE DUPLICATED, USED OR DISCLOSED WITHOUT WRITTEN CONSENT OF THE ARCHITECT

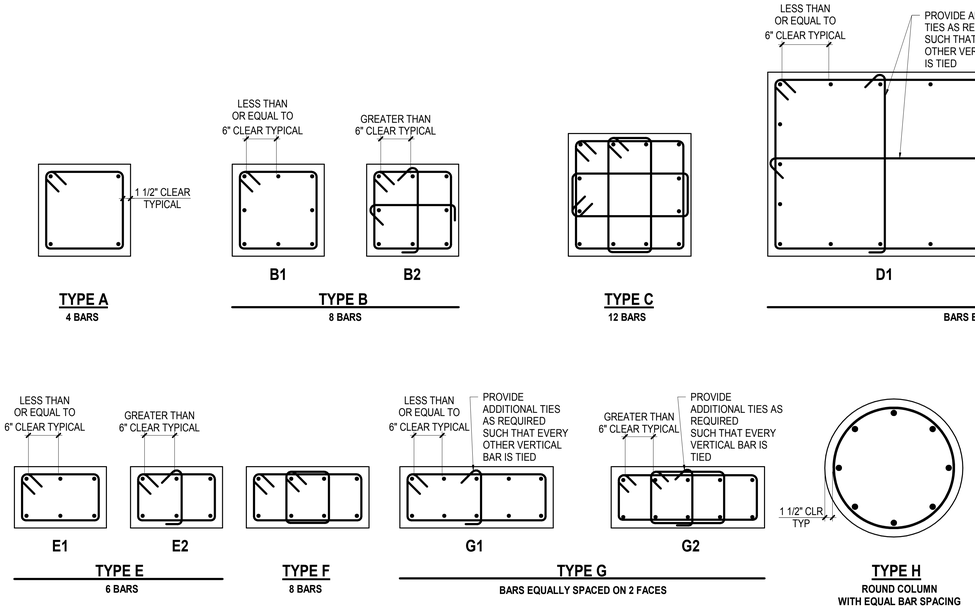

NOTES:

1. FOR ALL TYPES STAGGER ALL TIE HOOKS
2. FOR TYPE **D** TOTAL NUMBER OF BARS SHOULD BE SPACED AROUND PERIMETER IN SUCH A WAY AS TO ACHIEVE APPROXIMATELY EQUAL SPACING
3. FOR TYPE **G** TOTAL NUMBER OF BARS SHOULD BE SPACED AROUND PERIMETER IN SUCH A WAY AS TO ACHIEVE EQUAL SPACING ON THE TWO LONG SIDES

1 COLUMN TYPES - BAR ARRANGEMENT

NOT TO SCALE

COLUMN SCHEDULE							
MARK		C1	C2	C3	C4	C5	C6
COLUMN SIZE (IN)		12X24	16X16	18X18	12X24	12X24	18X18
VERTICAL REINFORCING		8#8	8#8	8#8	8#10	8#8	12#7
TIES	LOC 1	#5@4"	#4@4"	#5@6"	#5@4"	#5@4"	#5@6"
	LOC 2	#5@4"	#4@4"	#5@4"	#5@4"	#5@4"	#5@4"
COLUMN TYPE		TYPE F	TYPE B2	TYPE B2	TYPE F	TYPE F	TYPE C

COLUMN NOTES:

1. FOR TOP OF STRUCTURAL SLAB ELEVATIONS SEE PLANS
2. SEE 1/- FOR BAR ARRANGEMENT FOR COLUMN TYP
3. SEE 3/- FOR LOC 1 AND LOC 2
4. PROVIDE #4@12" TIES UNLESS OTHERWISE NOTED TIE SPACING IS NOT TO EXCEED LEAST COLUMN DIMENSION OR 16 VERICAL BAR DIAMETERS
5. COLUMN SIZES SHOWN ARE PLAN DIMENSIONS IN INCHES FOR COLUMN ORIENTATION SEE PLAN
6. WHERE SCHEDULED INFORMATION IS NOT SHOWN SEE FLOOR BELOW

2 CONCRETE COLUMN SCHEDULE

NOT TO SCALE

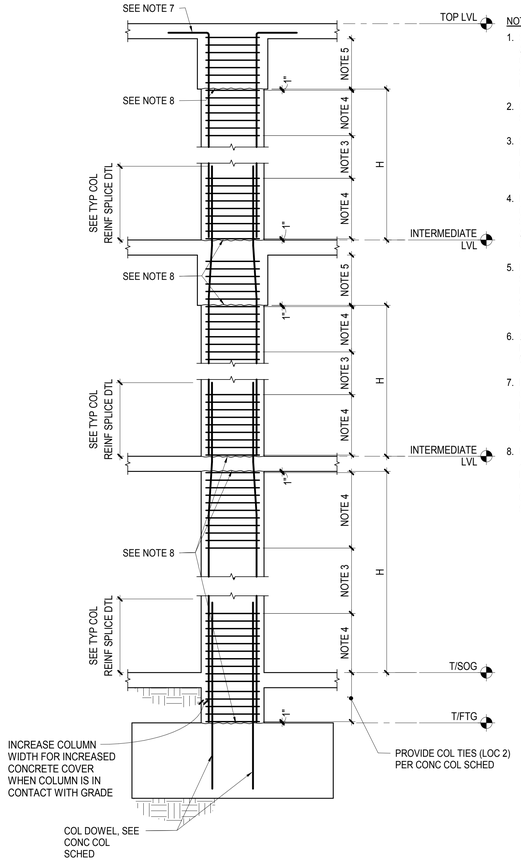

NOTES:

1. SEE CONCRETE COLUMN SCHEDULE FOR COLUMN SIZE AND VERT REINFORCING. FOR REINFORCING CONFIGURATION TYPE, SEE THE CONCRETE COLUMN SCHEDULE, AND THE TYPICAL CONCRETE COLUMN REINFORCING CONFIGURATION DETAIL.
2. COLUMN VERTICAL REINFORCING SHALL BE ASTM A615, SEE GENERAL NOTES.
3. SEE CONCRETE COLUMN SCHEDULE UNDER TIES (LOC 1) FOR TIE SIZE, SPACING, AND REINFORCING CONFIGURATION. REINFORCING CONFIGURATION TYPE IS NOTED IN 1/-.
4. FOR H/6, MAXIMUM COLUMN DIMENSION, OR 18" (WHICHEVER IS GREATER), SEE CONCRETE COLUMN SCHEDULE UNDER TIES (LOC 2) FOR TIE SIZE, SPACING, AND REINFORCING CONFIGURATION. REINFORCING CONFIGURATION TYPE IS NOTED IN [].
5. PROVIDE TIES (LOC 2) THROUGHOUT THE BEAM AND SLAB DEPTH, EXCEPT THAT THE TIE SPACING MAY BE INCREASED TO 6" WHERE BEAMS FRAME INTO FOUR SIDES OF COLUMN FOR THE DEPTH OF THE MOST SHALLOW BEAM.
6. AT CONTRACTOR'S OPTION, COLUMN VERTICAL BARS MAY BE EXTENDED UP ADDITIONAL FLOOR LEVELS WITHOUT SPLICING AT FLOORS.
7. PLACE HORIZONTAL HOOKS DIRECTLY BELOW TOP BARS OF BEAMS OR SLABS. SPLAY HOOKS AS NECESSARY TO RELIEVE BAR CONGESTION. AT CONTRACTORS OPTION, HOOKS MAY BE PLACED TOWARD THE INSIDE OF THE COLUMN.
8. UNLESS NOTED OTHERWISE, COLUMN CONSTRUCTION JOINTS SHALL BE AT THE UNDERSIDE OF FLOOR SLABS, BEAMS, OR GIRDERS, AND AT THE TOPS OF FOOTINGS OR FLOOR SLABS. BEAMS, GIRDERS, BRACKETS, COLUMNS CAPITALS, HAUNCHES, AND DROP PANELS SHALL BE PLACED AT THE SAME TIME AS SLABS.

10 CONCRETE COMUMN REINFORCING

NOT TO SCALE

AXIS GFA

1130 WESTWOOD BLVD
LOS ANGELES, CA 90024
T 310.209.7520
F 310.209.7516
www.axisgfa.com

PROJECT NAME

Residence Inn® Marriott.

840 KILDARE STREET,
LANCASTER, CA

OWNER:

INSITE REAL STATE DEVELOPMENT
6265 VARIEL AVENUE
WOODLAND HILLS, CA 91367

Thornton Tomasetti

Thornton Tomasetti, Inc.
707 Wilshire Blvd, Suite 4450
Los Angeles, CA 90017-3618
T 213.330.7000 F 213.330.7001

Project Status

REGISTERED PROFESSIONAL ENGINEER
CHAKAR GHUTRE, GRUBER
No. S4416
Exp. 6/30/18
STRUCTURAL
STATE OF CALIFORNIA

NO.	DATE	ISSUES AND REVISIONS	BY
	10.13.17	DESIGN DEVELOPMENT	
	11.20.17	CD PROGRESS SET	
	12.18.17	PLAN CHECK	
	02.16.18	PLAN CHECK	

DATE

SCALE AS NOTED

PROJECT NUMBER

COMPUTER FILE **S17081**

PROJECT NAME

DESCRIPTION
TYPICAL CONCRETE COLUMN DETAILS

SHEET NUMBER
S5.00

ALL DRAWINGS AND WRITTEN MATERIAL APPEARING HEREIN CONSTITUTE ORIGINAL AND UNPUBLISHED WORK OF THE ARCHITECT AND MAY NOT BE DUPLICATED, USED OR DISCLOSED WITHOUT WRITTEN CONSENT OF THE ARCHITECT

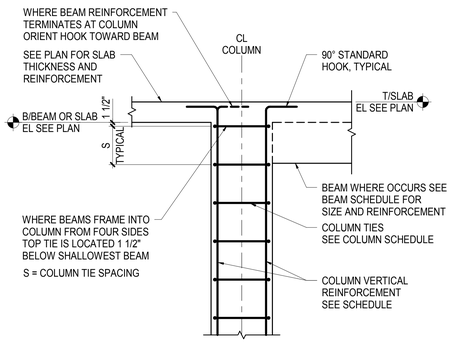

1 TYPICAL TOP OF COLUMN
NOT TO SCALE

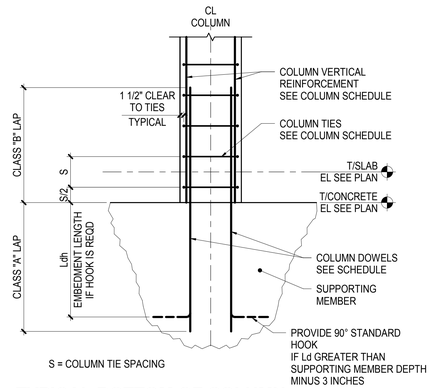

2 TYPICAL BOTTOM OF COLUMN
NOT TO SCALE

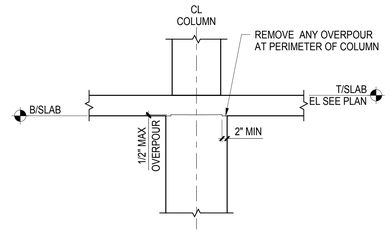

3 TYPICAL COLUMN OVERPOUR TOLERANCE
NOT TO SCALE

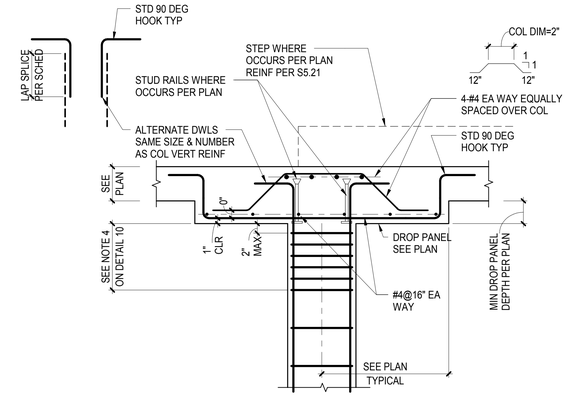

4 TYPICAL DROP PANEL DETAIL
3/4" = 1'-0"

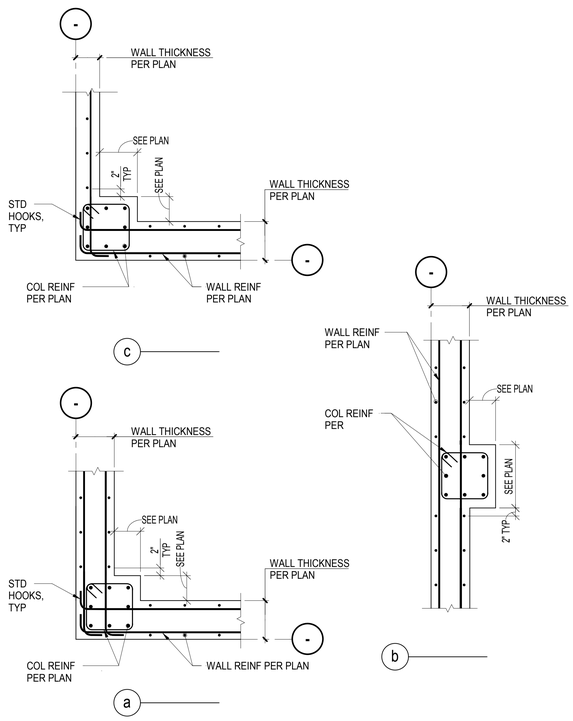

5 COLUMN IN WALL DETAILS
3/4" = 1'-0"

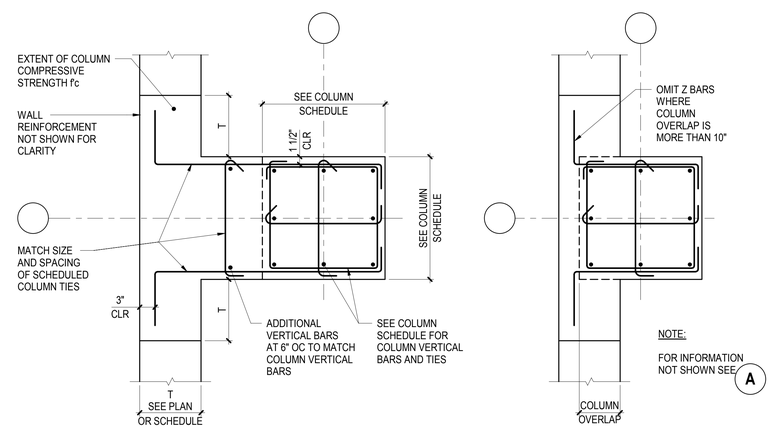

6 TYPICAL COLUMN OR PIER AT WALL
NOT TO SCALE

AXIS GFA
1130 WESTWOOD BLVD
LOS ANGELES, CA 90024
T 310.209.7520
F 310.209.7516
www.axisgfa.com

PROJECT NAME

Residence Inn® Marriott.

840 KILDARE STREET,
LANCASTER, CA

OWNER:

INSITE REAL STATE DEVELOPMENT
6265 VARIEL AVENUE
WOODLAND HILLS, CA 91367

Thornton Tomasetti
Thornton Tomasetti, Inc.
707 Wilshire Blvd, Suite 4450
Los Angeles, CA 90017-3618
T 213.330.7000 F 213.330.7001

Project Status

REGISTERED PROFESSIONAL ENGINEER CHARLES QUINTRO No. S4416 Exp. 6/30/18 STRUCTURAL STATE OF CALIFORNIA

NO.	DATE	ISSUES AND REVISIONS	BY
		10.13.17 DESIGN DEVELOPMENT	
		11.20.17 CD PROGRESS SET	
		12.18.17 PLAN CHECK	
		02.16.18 PLAN CHECK	

DATE

SCALE AS NOTED

PROJECT NUMBER

COMPUTER FILE S17081

PROJECT NAME

DESCRIPTION
CONCRETE COLUMN DETAILS

SHEET NUMBER
S5.01

ALL DRAWINGS AND WRITTEN MATERIAL APPEARING HEREIN CONSTITUTE ORIGINAL AND UNPUBLISHED WORK OF THE ARCHITECT AND MAY NOT BE DUPLICATED, USED OR DISCLOSED WITHOUT WRITTEN CONSENT OF THE ARCHITECT

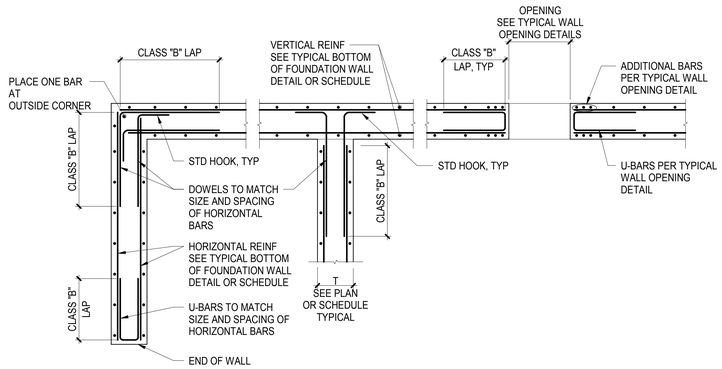

1 TYPICAL WALL REINFORCEMENT LAYOUT - PLAN
NOT TO SCALE

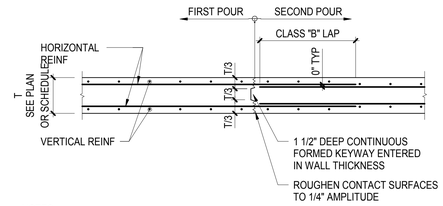

NOTES:

1. SEE ARCHITECTURAL DOCUMENTS FOR WATERSTOP REQUIREMENTS
2. SEE GENERAL NOTES FOR CONSTRUCTION JOINT MAXIMUM SPACING

2 TYPICAL VERTICAL CONSTRUCTION JOINT IN CONCRETE WALL
NOT TO SCALE

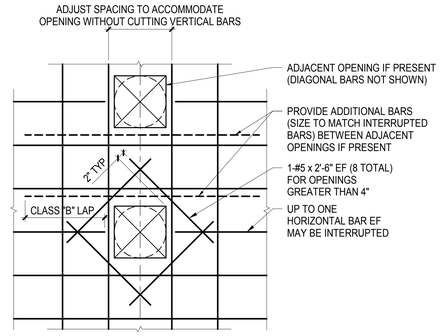

OPENING LESS THAN 10"

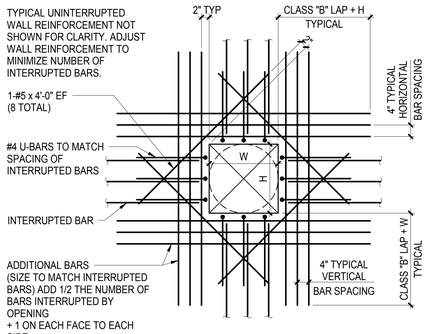

OPENING 10" TO 30"

NOTES:

1. MINIMUM CLEAR DISTANCE BETWEEN OPENINGS IS 2 TIMES MAXIMUM OPENING SIZE
2. FOR OPENINGS NOT SHOWN ON STRUCTURAL DRAWINGS, CONTRACTOR TO SUBMIT LOCATIONS AND SPACING TO STRUCTURAL ENGINEER FOR WRITTEN APPROVAL

3 TYPICAL WALL OPENING
NOT TO SCALE

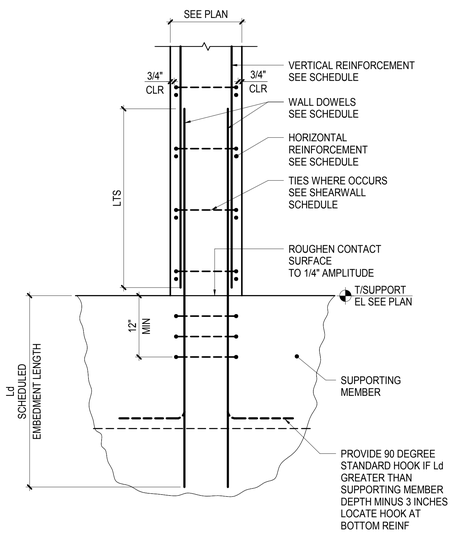

4 TYPICAL BOTTOM OF WALL
NOT TO SCALE

AXIS GFA
1130 WESTWOOD BLVD
LOS ANGELES, CA 90024
T 310.209.7520
F 310.209.7516
www.axisgfa.com

PROJECT NAME

Residence Inn® Marriott.

840 KILDARE STREET,
LANCASTER, CA

OWNER:

INSITE REAL STATE DEVELOPMENT
6265 VARIEL AVENUE
WOODLAND HILLS, CA 91367

Thornton Tomasetti
Thornton Tomasetti, Inc.
707 Wilshire Blvd, Suite 4450
Los Angeles, CA 90017-3618
T 213.330.7000 F 213.330.7001

Project Status

REGISTERED PROFESSIONAL ENGINEER
CONRAD GANTRI, SAN JOSE
No. S4416
Exp. 6/30/18
STRUCTURAL
STATE OF CALIFORNIA

NO.	DATE	ISSUES AND REVISIONS	BY
	10.13.17	DESIGN DEVELOPMENT	
	11.20.17	CD PROGRESS SET	
	12.18.17	PLAN CHECK	
	02.16.18	PLAN CHECK	

DATE

SCALE AS NOTED

PROJECT NUMBER

COMPUTER FILE S17081

PROJECT NAME

DESCRIPTION
TYPICAL WALL DETAILS

SHEET NUMBER
S5.10

ALL DRAWINGS AND WRITTEN MATERIAL APPEARING HEREIN CONSTITUTE ORIGINAL AND UNPUBLISHED WORK OF THE ARCHITECT AND MAY NOT BE DUPLICATED, USED OR DISCLOSED WITHOUT WRITTEN CONSENT OF THE ARCHITECT

NOTES:

1. REFER TO PLANS FOR ADDITIONAL BARS AROUND OPENINGS
2. SEE STRUCTURAL DRAWINGS FOR QUANTITY AND LOCATIONS OF OPENINGS. CONTRACTOR SHALL VERIFY SIZE AND LOCATION OF ALL OPENINGS WITH MEP DRAWINGS NOTIFY STRUCTURAL ENGINEER IN WRITING OF ANY DISCREPANCIES FOR REVIEW AND APPROVAL
3. FOR TWO-WAY SLAB SEE TYPICAL TWO-WAY SLAB OPENING LIMITATIONS. FOR OPENING NOT MEETING LIMITATIONS OR GREATER THAN 3 FEET, SUBMIT OPENINGS TO SER FOR APPROVAL
4. FOR ONE-WAY SLABS WHERE THE OPENING DIMENSION PERPENDICULAR TO THE DIRECTION OF THE SPAN IS GREATER THAN 2 FEET, SUBMIT OPENINGS TO SER FOR APPROVAL
5. WHERE ADJACENT OPENINGS ARE NOT SEPARATED BY 2X THE LARGEST OPENING DIMENSION OR WOULD INTERRUPT THE ADDITIONAL REINFORCEMENT FROM THE ADJACENT OPENING, SUBMIT OPENINGS TO SER FOR APPROVAL

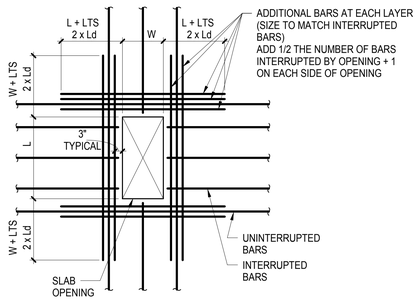

ADDITIONAL BARS WHERE BARS ARE INTERRUPTED

NOTES: ADDITIONAL BARS

1. PROVIDE ADDITIONAL BARS ON EACH SIDE OF OPENING FOR TOP AND BOTTOM BARS THAT ARE INTERRUPTED BY OPENINGS DISTRIBUTE REPLACEMENT BARS EQUALLY TO BOTH SIDES OF OPENING AT 3" SPACING
2. PROVIDE A MINIMUM OF 2 BARS EACH SIDE OF OPENING TOP AND BOTTOM
   WHERE NO TOP BARS ARE PRESENT, PROVIDE ADDITIONAL TOP BARS SHOWN ABOVE
3. AT CLUSTERED OPENINGS, PROVIDE THESE ADDITIONAL BARS AROUND THE CLUSTER PLUS THE ADDITIONAL BARS SHOWN IN THE CLUSTERED OPENING DETAIL

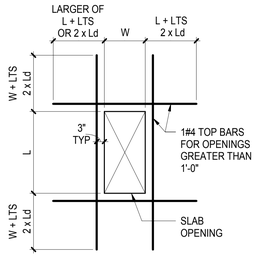

ADDITIONAL TOP BARS WHERE NO TOP BARS ARE PRESENT

ADDITIONAL TOP BARS	
OPENING SIZE (LARGER DIMENSION OF OPENING)	TOP BARS ALL SIDES
0 - 12"	NONE
12" - 36"	(1) #4

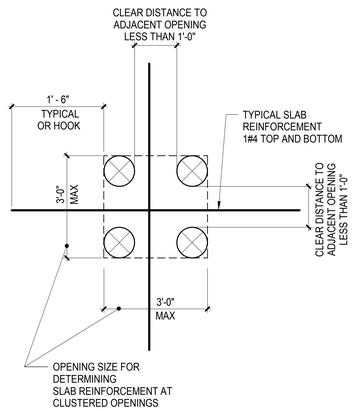

TYPE 1

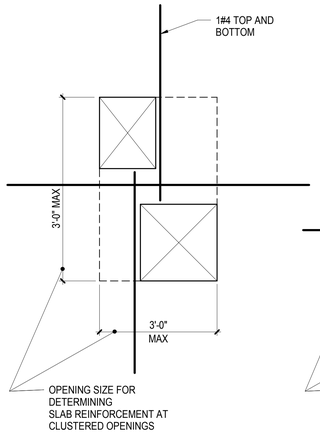

TYPE 2

SEE TYPE 1 FOR INFORMATION NOT SHOWN

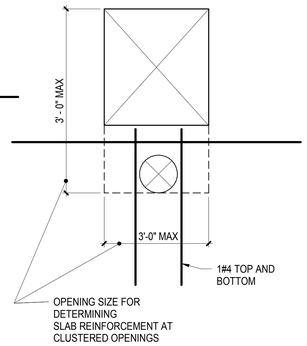

TYPE 3

SEE TYPE 1 FOR INFORMATION NOT SHOWN

CLUSTERED OPENING ADDITIONAL REINFORCEMENT

NOTES: CLUSTERED OPENINGS

1. THE REINFORCEMENT REQUIREMENTS AT CLUSTERED OPENINGS
   ARE IN ADDITION TO THE TYPICAL SLAB OPENING DETAIL REQUIREMENTS AROUND THE ENTIRE CLUSTER
2. FOR ONE-WAY SLABS, WHEN CLUSTERED OPENING IS GREATER THAN 2 FEET, SUBMIT TO SER FOR APPROVAL.
3. FOR TWO-WAY SLABS, WHEN CLUSTERED OPENING DOES NOT MEET TWO-WAY SLAB OPENING LIMITATIONS OR IS GREATER THAN 3 FEET, SUBMIT TO SER FOR APPROVAL

1 TYPICAL OPENINGS IN CONCRETE SLAB

NOT TO SCALE

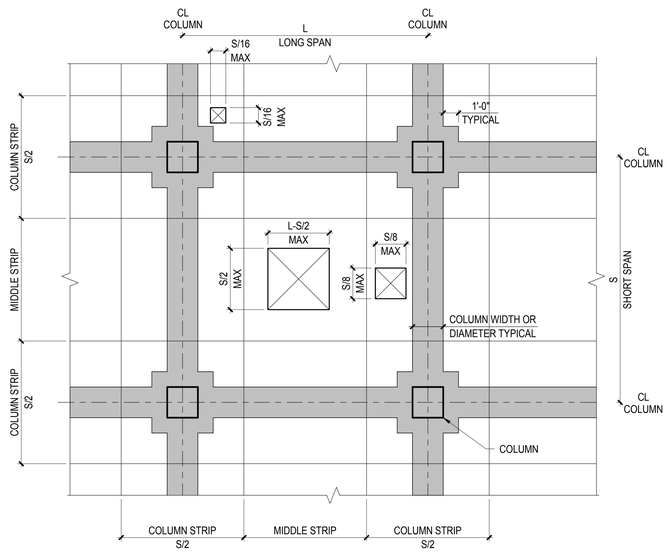

NOTES:

1. INDICATES ZONE WHERE OPENINGS ARE NOT PERMITTED WITHOUT WRITTEN APPROVAL BY SER
   OPENINGS NOT SHOWN ON STRUCTURAL DRAWINGS MUST BE COORDINATED AND APPROVED BY SER
2. OPENINGS MEETING THE LIMITATIONS ABOVE SHALL BE PROVIDED WITH REINFORCEMENT AS SHOWN ON PLAN AND FOLLOWING TYPICAL SLAB OPENING DETAILS INCLUDING ADDITIONAL BARS FOR INTERRUPTED REINFORCEMENT
3. OPENINGS SHALL BE SHOWN ON COORDINATED PENETRATION DRAWINGS AND REINFORCEMENT SHOP DRAWINGS FOR SER REVIEW
4. OPENINGS NOT MEETING THESE LIMITATIONS MUST BE SUBMITTED TO THE SER FOR COORDINATION, DESIGN, AND APPROVAL PRIOR TO SUBMITTING SHOP DRAWINGS

4 TYPICAL TWO-WAY SLAB OPENING LIMITATIONS

NOT TO SCALE

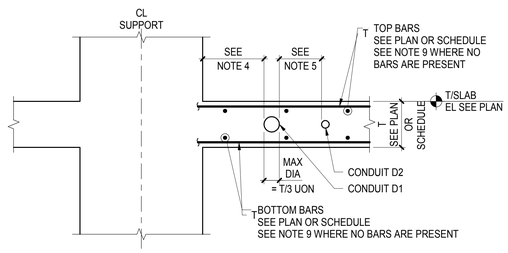

POST-TENSIONED CONCRETE NOTES:

1. FOR POST-TENSIONED CONCRETE, MAXIMUM CONDUIT OUTER DIAMETER IS THE SMALLER OF:
   a. T/4
   b. 2"
2. CONDUITS MAY NOT BE TIED TO, CONTACT, DISPLACE, OR INTERRUPT THE POST-TENSIONING REINFORCEMENT
3. MAINTAIN A CLEAR SPACING BETWEEN TENDONS AND CONDUITS OF THREE TIMES THE DIAMETER OF THE CONDUIT BUT NOT LESS THAN 6 INCHES

NOTES:

1. PLACE CONDUITS BETWEEN TOP AND BOTTOM LAYER OF REINFORCEMENT CENTERED WITHIN SLAB
2. CROSSOVER OF CONDUITS AND/OR PIPES IS NOT PERMITTED WITHOUT PRIOR WRITTEN APPROVAL BY SER
3. CONDUITS TO BE PLASTIC OR STEEL. USE OF ALUMINUM CONDUITS IS NOT PERMITTED
4. PLACE CONDUITS THE LARGEST OF THE FOLLOWING CLEAR FROM FACE OF COLUMN:
   a. LARGEST COLUMN DIMENSION (WIDTH OR DEPTH)
   b. 2 x SLAB THICKNESS T
   c. 1'-0"
5. MAINTAIN A CLEAR SPACING BETWEEN CONDUITS OF THREE TIMES THE LARGER OUTER DIAMETER OF D1 AND D2, BUT NOT LESS THAN 6 INCHES
6. NO MORE THAN THREE (3) CONDUITS PER SIX (6) FT WIDTH OF SLAB ARE PERMITTED WITHOUT PRIOR WRITTEN APPROVAL BY SER
7. WHERE LARGE NUMBERS OF CONDUIT ENTER THE SLAB AT ONE LOCATION:
   a. SUBMIT LAYOUT FOR APPROVAL BY SER
   b. FAN OUT CONDUITS IMMEDIATELY
   c. PROVIDE ADDITIONAL TOP & BOTTOM REINFORCEMENT AS DIRECTED BY SER UNTIL NOTES 5 AND 6 SPACING REQUIREMENTS ARE MET
8. NO CONDUITS ARE PERMITTED WITHIN A DISTANCE "T" CLEAR FROM SLAB EDGE, SLAB DEPRESSION, OR DROP PANEL WITHOUT PRIOR WRITTEN APPROVAL BY SER
9. WHERE NO BARS ARE PRESENT AT ONE OR MORE FACES OF SLAB, PROVIDE THE FOLLOWING REINFORCEMENT PERPENDICULAR TO THE CONDUIT(S) 3'-0" LONG OR EXTENDING 1'-0" PAST EACH SIDE OF CONDUIT(S), WHICHEVER IS LARGER:
   T < 8", #4@12" OC
   8" < T < 1'-0", #5@12" OC
   1'-0" < T < 1'-6", #6@12" OC
10. ANY DEVIATIONS FROM THE ABOVE STATED CONDITIONS REQUIRE PRIOR WRITTEN APPROVAL BY SER

5 TYPICAL CONDUITS IN SLAB

NOT TO SCALE

AXIS GFA
1130 WESTWOOD BLVD
LOS ANGELES, CA 90024
T 310.209.7520
F 310.209.7516
www.axisgfa.com

PROJECT NAME

Residence Inn® Marriott.

840 KILDARE STREET,
LANCASTER, CA

OWNER:

INSITE REAL STATE DEVELOPMENT
6265 VARIEL AVENUE
WOODLAND HILLS, CA 91367

Thornton Tomasetti
Thornton Tomasetti, Inc.
707 Wilshire Blvd, Suite 4450
Los Angeles, CA 90017-3618
T 213.330.7000 F 213.330.7001

Project Status

REGISTERED PROFESSIONAL ENGINEER
CHANDAN GANTRU BANERJEE
No. S4416
Exp. 6/30/18
STRUCTURAL
STATE OF CALIFORNIA

NO.	DATE	ISSUES AND REVISIONS	BY
	10.13.17	DESIGN DEVELOPMENT	
	11.20.17	CD PROGRESS SET	
	12.18.17	PLAN CHECK	
	02.16.18	PLAN CHECK	

DATE

SCALE AS NOTED

PROJECT NUMBER

COMPUTER FILE S17081

PROJECT NAME

DESCRIPTION
TYPICAL CONCRETE SLAB DETAILS

SHEET NUMBER
S5.20

ALL DRAWINGS AND WRITTEN MATERIAL APPEARING HEREIN CONSTITUTE ORIGINAL AND UNPUBLISHED WORK OF THE ARCHITECT AND MAY NOT BE DUPLICATED, USED OR DISCLOSED WITHOUT WRITTEN CONSENT OF THE ARCHITECT

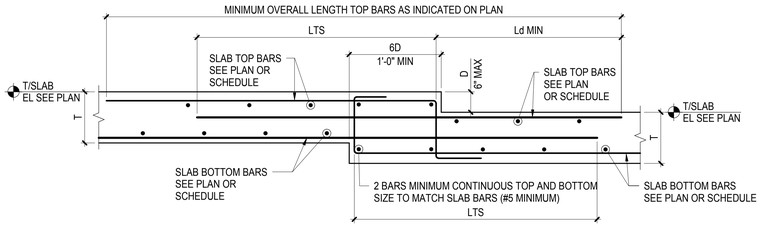

D LESS THAN T MINUS 2 INCHES
TOP AND BOTTOM BARS INTERRUPTED BY STEP

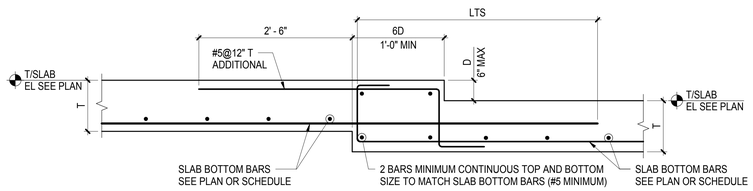

D LESS THAN T MINUS 2 INCHES
BOTTOM BARS INTERRUPTED BY STEP

1 TYPICAL STEPS IN CONCRETE SLAB
NOT TO SCALE

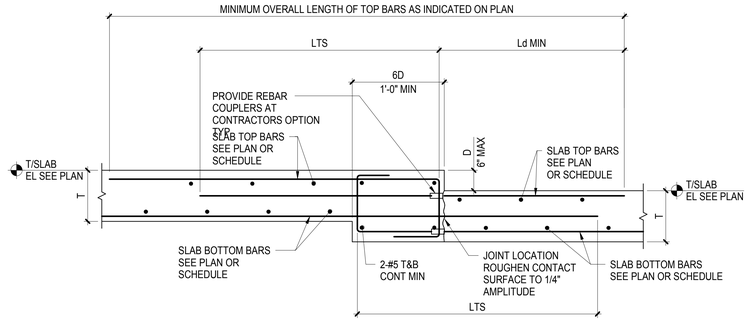

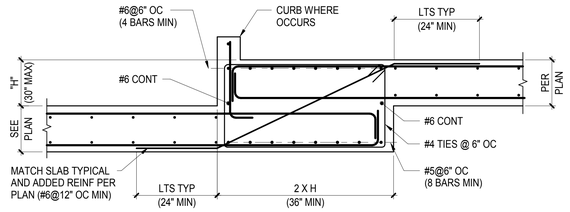

3 TYPICAL LARGE STEP IN CONCRETE SLAB
NOT TO SCALE

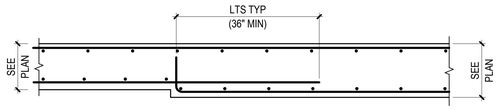

5 TYPICAL CHANGE IN SLAB THICKNESS
NOT TO SCALE

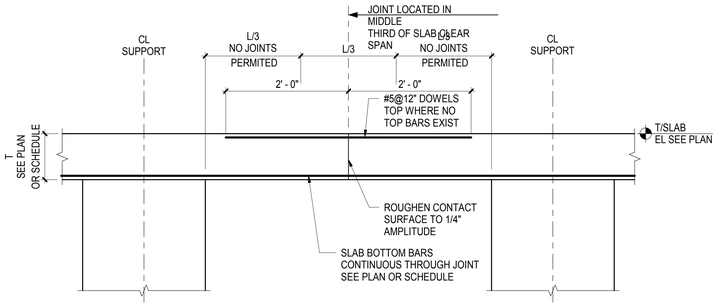

NOTES:

1. CONTRACTOR SHALL SUBMIT CONSTRUCTION JOINT LAYOUT PLAN FOR SER APPROVAL
2. FOR SLAB REINFORCEMENT NOT SHOWN, SEE PLAN OR SCHEDULE

6 TYPICAL SLAB CONSTRUCTION JOINT
NOT TO SCALE

AXIS GFA
1130 WESTWOOD BLVD
LOS ANGELES, CA 90024
T 310.209.7520
F 310.209.7516
www.axisgfa.com

PROJECT NAME

Residence Inn® Marriott.

840 KILDARE STREET,
LANCASTER, CA

OWNER:

INSITE REAL STATE DEVELOPMENT
6265 VARIEL AVENUE
WOODLAND HILLS, CA 91367

Thornton Tomasetti
Thornton Tomasetti, Inc.
707 Wilshire Blvd, Suite 4450
Los Angeles, CA 90017-3618
T 213.330.7000 F 213.330.7001

Project Status

REGISTERED PROFESSIONAL ENGINEER
CHARMAIN QUINTRIC GRAGASIN
No. S4416
Exp. 6/30/18
STRUCTURAL
STATE OF CALIFORNIA

NO.	DATE	ISSUES AND REVISIONS	BY
	10.13.17	DESIGN DEVELOPMENT	
	11.20.17	CD PROGRESS SET	
	12.18.17	PLAN CHECK	
	02.16.18	PLAN CHECK	

DATE
SCALE AS NOTED
PROJECT NUMBER
COMPUTER FILE S17081
PROJECT NAME

DESCRIPTION
TYPICAL CONCRETE SLAB DETAILS

SHEET NUMBER
S5.21

ALL DRAWINGS AND WRITTEN MATERIAL APPEARING HEREIN CONSTITUTE ORIGINAL AND UNPUBLISHED WORK OF THE ARCHITECT AND MAY NOT BE DUPLICATED, USED OR DISCLOSED WITHOUT WRITTEN CONSENT OF THE ARCHITECT

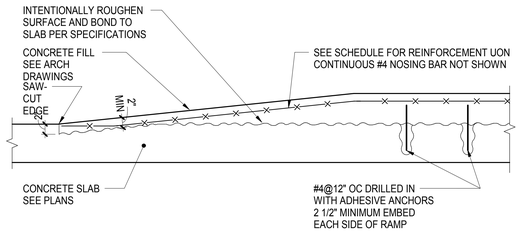

DETAIL AT RAMP

THICKNESS	REINFORCEMENT
≤ 3"	WWR 6x6 - W2.9xW2.9
≤ 4"	WWR 6x6 - W4.0xW4.0
≤ 6"	#4 @ 12" TOP EACH WAY
≤ 12"	#4 @ 12" TOP & BOTTOM EACH WAY

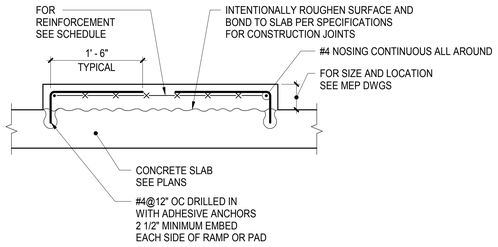

NOTE:

1. THIS DETAIL IS NOT APPLICABLE TO GENERAL RAISED SLAB AREA HIGHER THAN 4" OTHER THAN MECHANICAL PADS AND HOUSEKEEPING PADS

SECTION AT RAMP OR PAD

1 TYPICAL CONCRETE FILL HOUSEKEEPING PAD / MECHANICAL PAD / RAMP

NOT TO SCALE

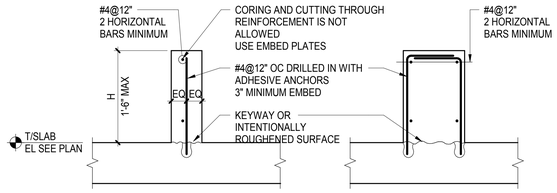

CURB WIDTH - 4" MINIMUM TO 7" MAXIMUM **CURB WIDTH OVER 7"**

NOTES:

1. FOR SIZE AND LOCATION SEE ARCH, MEP, OR STRUCTURAL DRAWINGS
2. ROUGHEN SURFACE OF SLAB TO 1/4" AMPLITUDE CLEAN THOROUGHLY AND APPLY BONDING AGENT IMMEDIATELY BEFORE CASTING CURB
3. THIS DETAIL IS APPLICABLE AT CURBS FOR NON-STRUCTURAL ELEMENTS SUCH AS SKYLIGHTS, INTERIOR PARTITIONS AND INTERIOR RAILINGS
4. SEE ARCH DRAWINGS FOR EMBEDDED PLATES AND BLOCKOUTS REPLACE REINFORCEMENT INTERRUPTED BY BLOCKOUTS

2 TYPICAL CONCRETE CURB (AT INTERIOR)

NOT TO SCALE

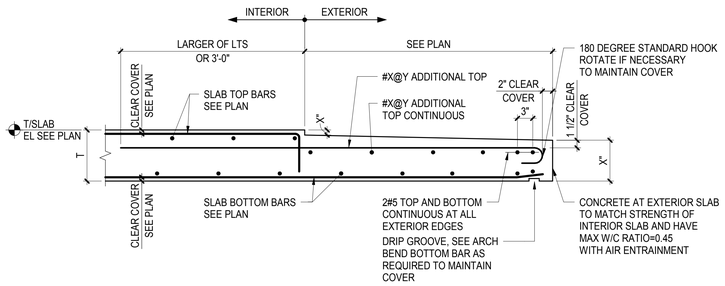

3 TYPICAL EXTERIOR CONCRETE SLAB AT BALCONY/TERRACE

NOT TO SCALE

AXIS GFA

1130 WESTWOOD BLVD
LOS ANGELES, CA 90024
T 310.209.7520
F 310.209.7516
www.axisgfa.com

PROJECT NAME

Residence Inn® Marriott.

840 KILDARE STREET,
LANCASTER, CA

OWNER:

INSITE REAL STATE DEVELOPMENT
6265 VARIEL AVENUE
WOODLAND HILLS, CA 91367

Thornton Tomasetti

Thornton Tomasetti, Inc.
707 Wilshire Blvd, Suite 4450
Los Angeles, CA 90017-3618
T 213.330.7000 F 213.330.7001

Project Status

REGISTERED PROFESSIONAL ENGINEER
CHANDRA GANTRI TRAVER
No. S4416
Exp. 6/30/18
STRUCTURAL
STATE OF CALIFORNIA

NO.	DATE	ISSUES AND REVISIONS	BY
	10.13.17	DESIGN DEVELOPMENT	
	11.20.17	CD PROGRESS SET	
	12.18.17	PLAN CHECK	
	02.16.18	PLAN CHECK	

DATE

SCALE AS NOTED

PROJECT NUMBER

COMPUTER FILE S17081

PROJECT NAME

DESCRIPTION
TYPICAL CONCRETE SLAB DETAILS

SHEET NUMBER
S5.22

ALL DRAWINGS AND WRITTEN MATERIAL APPEARING HEREIN CONSTITUTE ORIGINAL AND UNPUBLISHED WORK OF THE ARCHITECT AND MAY NOT BE DUPLICATED, USED OR DISCLOSED WITHOUT WRITTEN CONSENT OF THE ARCHITECT

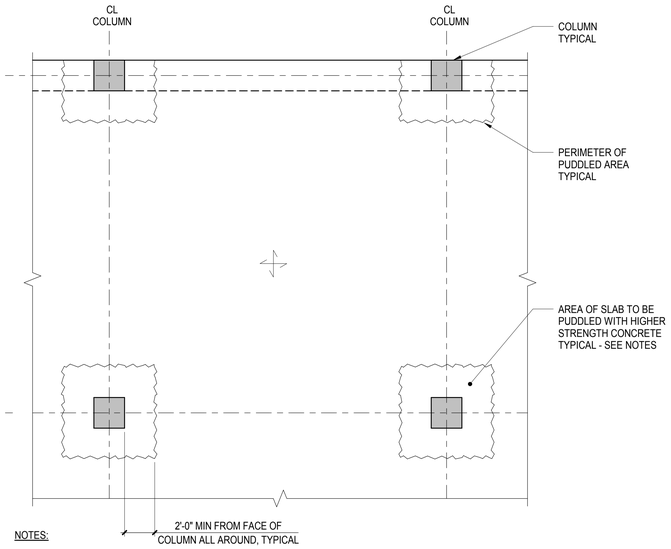

NOTES:

1. PUDDLING IS REQUIRED IN THE FLOOR AT ALL COLUMNS WHERE THE CONCRETE COMPRESSIVE STRENGTH (f'c) OF THE COLUMN ABOVE OR BELOW THE FLOOR IS GREATER THAN 1.4 TIMES THE CONCRETE COMPRESSIVE STRENGTH (f'c) OF THE FLOOR
2. SLAB AND BEAMS SHALL BE PUDDLED WITH THE LARGER CONCRETE COMPRESSIVE STRENGTH (f'c) USED FOR THE COLUMN ABOVE OR BELOW
3. PLACE THE HIGHER STRENGTH CONCRETE IN THE AREA TO BE PUDDLED BEFORE PLACING THE LOWER STRENGTH CONCRETE OF THE SLAB
4. THE DIFFERENT CONCRETE COMPRESSIVE STRENGTHS (f'c) SHALL BE WELL INTEGRATED AT THE PERIMETER OF THE PUDDLED AREA TO PROVIDE MONOLITHIC CONCRETE IN THE FINAL CONDITION

1 TYPICAL TWO-WAY SLAB PUDDLING PLAN
NOT TO SCALE

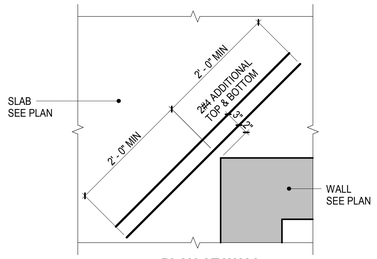

PLAN AT WALL

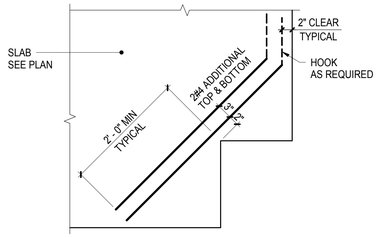

PLAN AT RE-ENTRANT CORNER

2 TYPICAL CONCRETE SLAB CORNERS
NOT TO SCALE

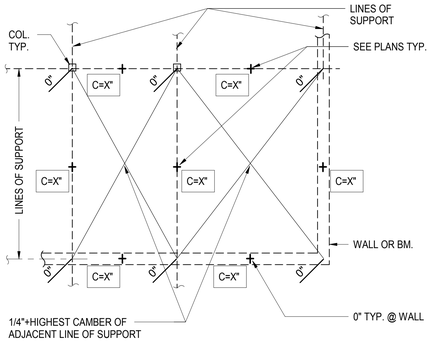

PLAN VIEW

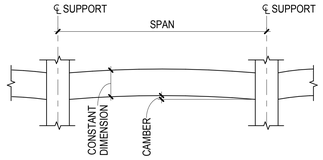

MINIMUM CAMBER SCHEDULE UON		
SPAN	SLABS	BEAMS
0'-0" TO 10'-0"	0"	0"
10'-0" TO 15'-0"	3/8"	1/4"
15'-0" TO 20'-0"	1/2"	3/8"
20'-0" TO 25'-0"	5/8"	1/2"
25'-0" TO 30'-0"	3/4"	5/8"
30'-0" TO 36'-0"	1"	3/4"

3 TYPICAL CAMBER OF CONCRETE SLABS & BEAMS
NOT TO SCALE

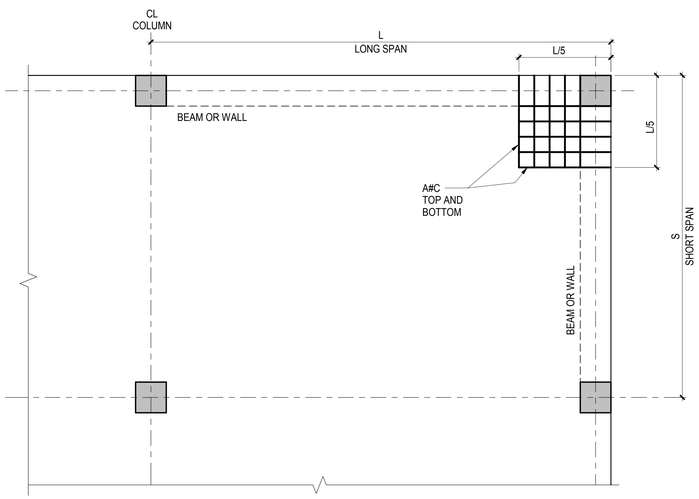

NOTES:

1. SEE PLAN FOR SLAB REINFORCEMENT
   BARS SHOWN ABOVE ARE ADDITIONAL TO THOSE SHOWN ON PLAN
   BARS SHALL BE LOCATED IN SAME LAYERS AS SLAB REINFORCEMENT
   BEAM TOP BARS TO BE LOCATED BELOW SLAB TOP BARS
2. ADDITIONAL BARS TO BE EQUALLY SPACED WITHIN EXTENT SHOWN ABOVE
3. ADDITIONAL TOP BARS TO BE HOOKED INTO SUPPORT
   ADDITIONAL BOTTOM BARS TO EXTEND 6" INTO SUPPORT

4 TYPICAL BEAM OR WALL SUPPORTED SLAB EXTERIOR CORNER
NOT TO SCALE

AXIS GFA
1130 WESTWOOD BLVD
LOS ANGELES, CA 90024
T 310.209.7520
F 310.209.7516
www.axisgfa.com

PROJECT NAME

Residence Inn® Marriott.

840 KILDARE STREET,
LANCASTER, CA

OWNER:

INSITE REAL STATE
DEVELOPMENT
6265 VARIEL AVENUE
WOODLAND HILLS, CA 91367

Thornton Tomasetti
Thornton Tomasetti, Inc.
707 Wilshire Blvd, Suite 4450
Los Angeles, CA 90017-3618
T 213.330.7000 F 213.330.7001

Project Status

REGISTERED PROFESSIONAL ENGINEER
EDWARD GANTRO SAGUIN
No. S4416
Exp. 6/30/18
STRUCTURAL
STATE OF CALIFORNIA

NO.	DATE	ISSUES AND REVISIONS	BY
	10.13.17	DESIGN DEVELOPMENT	
	11.20.17	CD PROGRESS SET	
	12.18.17	PLAN CHECK	
	02.16.18	PLAN CHECK	

DATE

SCALE AS NOTED

PROJECT NUMBER

COMPUTER FILE S17081

PROJECT NAME

DESCRIPTION
TYPICAL CONCRETE SLAB DETAILS

SHEET NUMBER
S5.23

ALL DRAWINGS AND WRITTEN MATERIAL APPEARING HEREIN CONSTITUTE ORIGINAL AND UNPUBLISHED WORK OF THE ARCHITECT AND MAY NOT BE DUPLICATED, USED OR DISCLOSED WITHOUT WRITTEN CONSENT OF THE ARCHITECT

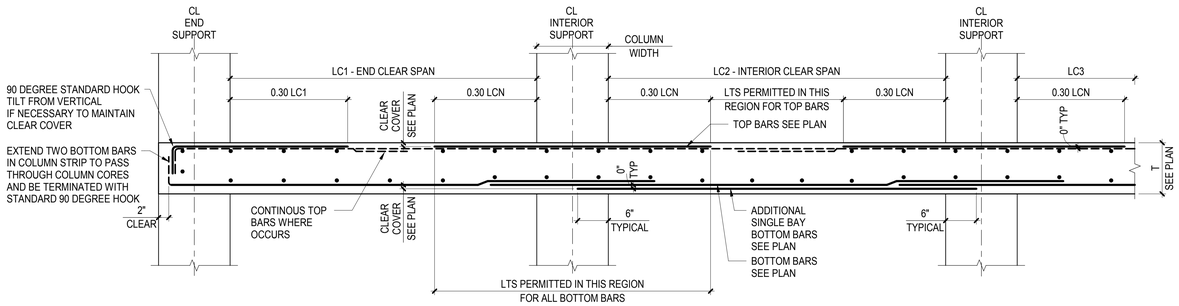

NOTES:

1. LCN DENOTES LARGER OF ADJACENT CLEAR SPANS

2. ADDITIONAL MULTI-BAY BOTTOM BARS TO BE SPLICED AS SHOWN ABOVE AND EXTEND 6" INTO SUPPORT AT BAR END

1 TYPICAL TWO-WAY FLAT PLATE - COLUMN STRIP REINFORCEMENT LAYOUT

NOT TO SCALE

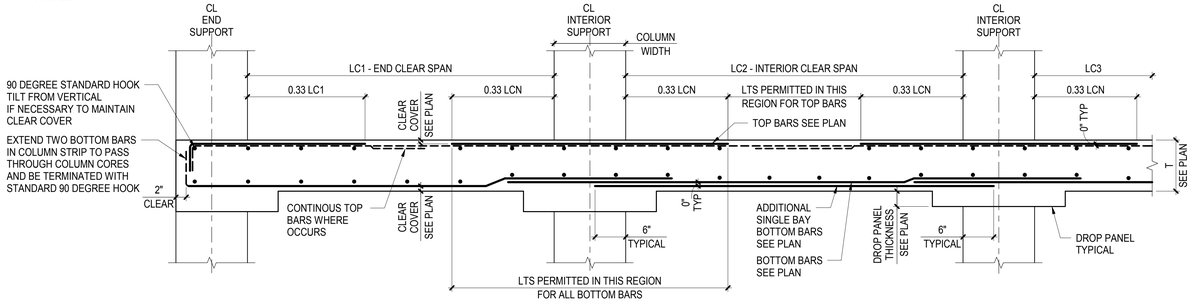

NOTES:

1. LCN DENOTES LARGER OF ADJACENT CLEAR SPANS

2. ADDITIONAL MULTI-BAY BOTTOM BARS TO BE SPLICED AS SHOWN ABOVE AND EXTEND 6" INTO SUPPORT AT BAR END

2 TYPICAL TWO-WAY FLAT SLAB - COLUMN STRIP REINFORCEMENT LAYOUT

NOT TO SCALE

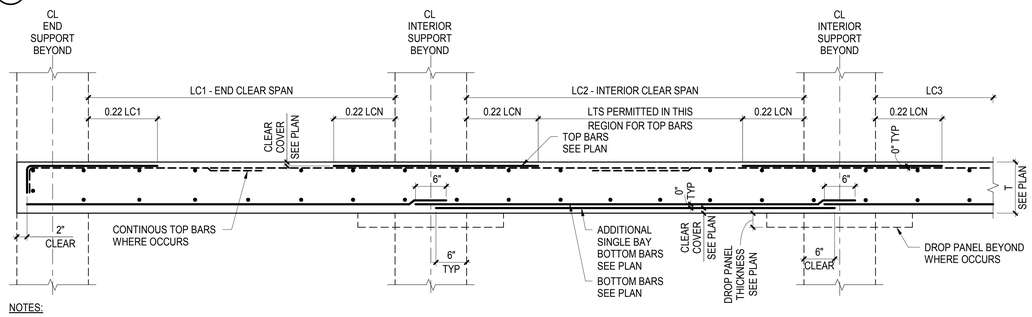

NOTES:

1. LCN DENOTES LARGER OF ADJACENT CLEAR SPANS

2. ADDITIONAL MULTI-BAY BOTTOM BARS TO BE SPLICED AS SHOWN ABOVE AND EXTEND 6" INTO SUPPORT AT BAR END

3 TYPICAL TWO-WAY SLAB - MIDDLE STRIP REINFORCEMENT LAYOUT

NOT TO SCALE

AXIS GFA

1130 WESTWOOD BLVD
LOS ANGELES, CA 90024
T 310.209.7520
F 310.209.7516
www.axisgfa.com

PROJECT NAME

Residence Inn® Marriott.

840 KILDARE STREET,
LANCASTER, CA

OWNER:

INSITE REAL STATE
DEVELOPMENT
6265 VARIEL AVENUE
WOODLAND HILLS, CA 91367

Thornton Tomasetti
Thornton Tomasetti, Inc.
707 Wilshire Blvd, Suite 4450
Los Angeles, CA 90017-3618
T 213.330.7000 F 213.330.7001

Project Status

REGISTERED PROFESSIONAL ENGINEER
CLAYBORN GANTRO TAGAREE
No. S4416
Exp. 6/30/18
STRUCTURAL
STATE OF CALIFORNIA

NO.	DATE	ISSUES AND REVISIONS	BY
	10.13.17	DESIGN DEVELOPMENT	
	11.20.17	CD PROGRESS SET	
	12.18.17	PLAN CHECK	
	02.16.18	PLAN CHECK	

DATE

SCALE AS NOTED

PROJECT NUMBER

COMPUTER FILE **S17081**

PROJECT NAME

DESCRIPTION
TYPICAL CONCRETE SLAB REINFORCEMENT DETAILS

SHEET NUMBER
S5.24

ALL DRAWINGS AND WRITTEN MATERIAL APPEARING HEREIN CONSTITUTE ORIGINAL AND UNPUBLISHED WORK OF THE ARCHITECT AND MAY NOT BE DUPLICATED, USED OR DISCLOSED WITHOUT WRITTEN CONSENT OF THE ARCHITECT

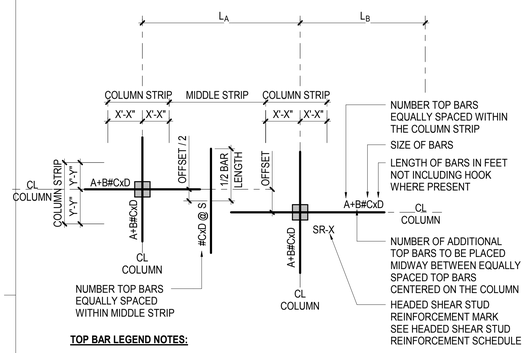

TOP BAR LEGEND NOTES:

1. NUMBER/SIZE/LENGTH/SPACING OF MIDDLE STRIP BARS SHOWN IN ONE DIRECTION ONLY SAME NOTATION APPLIES IN PERPENDICULAR DIRECTION
2. CENTERLINE OF COLUMN MAY NOT COINCIDE W/ GRIDLINES SEE DRAWINGS FOR OFFSET DIMENSION
3. HOOK ALL TOP BARS THAT PASS THROUGH COLUMN AT EXTERIOR SUPPORT WITH 90° STANDARD HOOK OR IF NECESSARY USE 180° STANDARD HOOK
4. ADDITIONAL BAR SHOWN EXPLICITLY. FOR TYPICAL REINF SEE PLAN
5. BEND BARS AS NECESSARY
6. SEE TYP CORNER SLAB DETAILS ON SHEET S5.23 FOR RE-ENTRANT CORNER'S REINFORCEMENT UNLESS SPECIFIED ON PLAN
7. COLUMN AND MIDDLE STRIP WIDTHS: SEE TYP TWO-WAY SLAB OPENING LIMITATIONS ON 4/S5.20.
8. LENGTHS OF BARS DO NOT INCLUDE HOOKS AT ENDS OF BARS.

1 TOP BAR REINFORCEMENT LEGEND
NOT TO SCALE

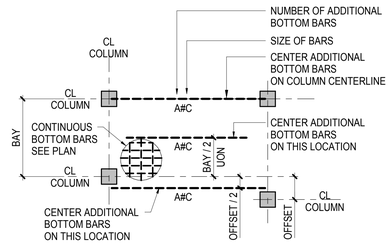

BOTTOM BAR LEGEND NOTES:

1. NUMBER / SIZE / LENGTH OF BARS SHOWN IN ONE DIRECTION ONLY SAME NOTATIONS APPLY IN PERPENDICULAR DIRECTION
2. CENTERLINE OF COLUMN MAY NOT COINCIDE W/ GRIDLINES SEE DRAWINGS FOR OFFSET DIMENSION
3. PLACE ADDITIONAL BARS AT SAME SPACING OF CONTINUOUS BARS AND MIDWAY BETWEEN CONTINUOUS BARS, UON
4. ALL CONTINUOUS BOTTOM BARS TO EXTEND WITHIN 2 INCHES OF SLAB EDGE
5. A MINIMUM OF BOTTOM BARS MUST EXTEND THROUGH THE COLUMN JOINT IN EACH DIRECTION
6. AT EXTERIOR SUPPORT HOOK BOTTOM BARS THAT PASS THROUGH COLUMN WITH 90° STANDARD HOOK OR IF NECESSARY USE 180° STANDARD HOOK.
7. FOR BOTTOM BAR LENGTHS SEE TYPICAL TWO WAY SLAB DETAILS
8. ADDITIONAL BAR SHOWN EXPLICITLY. FOR TYPICAL REINF SEE PLAN
10. SEE TYP CORNER SLAB DETAILS ON SHEET S5.23 FOR RE-ENTRANT CORNER'S REINFORCEMENT UNLESS SPECIFIED ON PLAN
11. COLUMN AND MIDDLE STRIP WIDTHS: SEE TYP TWO-WAY SLAB OPENING LIMITATIONS ON 4/S5.20
12. LENGTHS OF BARS DO NOT INCLUDE HOOKS AT ENDS OF BARS.

2 BOTTOM BAR REINFORCEMENT LEGEND
NOT TO SCALE

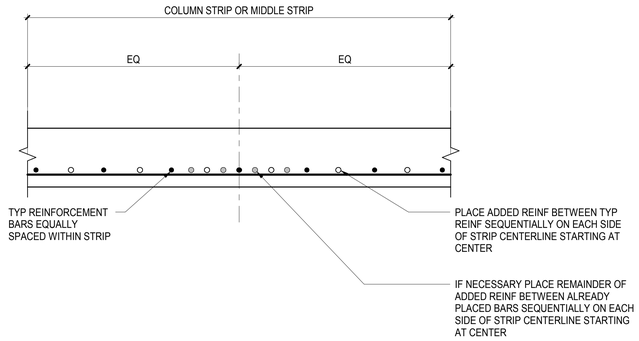

5 TYPICAL ADDED BARS PLACEMENT (TOP OR BOTTOM REINFORCEMENT)1
NOT TO SCALE

AXIS GFA
1130 WESTWOOD BLVD
LOS ANGELES, CA 90024
T 310.209.7520
F 310.209.7516
www.axisgfa.com

PROJECT NAME

Residence Inn® Marriott.

840 KILDARE STREET,
LANCASTER, CA

OWNER:

INSITE REAL STATE DEVELOPMENT
6265 VARIEL AVENUE
WOODLAND HILLS, CA 91367

Thornton Tomasetti
Thornton Tomasetti, Inc.
707 Wilshire Blvd, Suite 4450
Los Angeles, CA 90017-3618
T 213.330.7000 F 213.330.7001

Project Status

REGISTERED PROFESSIONAL ENGINEER
CHANDAN GANTRU DRAKER
No. S4416
Exp. 6/30/18
STRUCTURAL
STATE OF CALIFORNIA

NO.	DATE	ISSUES AND REVISIONS	BY
	10.13.17	DESIGN DEVELOPMENT	
	11.20.17	CD PROGRESS SET	
	12.18.17	PLAN CHECK	
	02.16.18	PLAN CHECK	

DATE

SCALE AS NOTED

PROJECT NUMBER

COMPUTER FILE **S17081**

PROJECT NAME

DESCRIPTION
CONCRETE SLAB REINFORCEMENT DETAILS

SHEET NUMBER
S5.25

ALL DRAWINGS AND WRITTEN MATERIAL APPEARING HEREIN CONSTITUTE ORIGINAL AND UNPUBLISHED WORK OF THE ARCHITECT AND MAY NOT BE DUPLICATED, USED OR DISCLOSED WITHOUT WRITTEN CONSENT OF THE ARCHITECT

CONCRETE BEAM SCHEDULE

f'c = SEE GENERAL NOTES

BEAM MARK	SIZE W (IN)	SIZE H (IN)	REINFORCEMENT: LEFT END TOP BARS LONG	LEFT END TOP BARS SHORT	RIGHT END TOP BARS LONG	RIGHT END TOP BARS SHORT	BOTTOM BARS LONG	BOTTOM BARS SHORT	SIDE BARS EACH FACE SEE NOTE 4	TIES TYPE	TIES SIZE	TIES SPACING FROM EACH END	REMARKS
3B1	18	80	6#8		6#8		6#8		#5@10" OC	2A	#4	@ 8"	TOP BARS IN 2 LAYERS ,BOTTOM BARS IN 2 LAYERS
3B2	12	80	2#8	2#8X10'-0"	2#8	2#8X10'-0"	6#8		#5@10" OC	2A	#4	@ 8"	BOTTOM BARS IN 3 LAYERS

NOTES:

1. TOP OF BEAM IS ASSUMED TO BE TOP OF SLAB UON.
2. LEFT END AND RIGHT END OF BEAM ARE DEFINED ON BEAM ORIENTATION KEY PLAN
3. WHERE REINFORCEMENT IS NOTED AS "SEE ADJ BEAM", REINFORCEMENT IS TO BE CONTINUED FROM ADJACENT BEAM
4. SEE TYPICAL BEAM SECTION DETAIL WHERE NO SIDE BARS ARE INDICATED

REINFORCEMENT LEGEND:

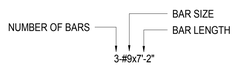

1 CONCRETE BEAM SCHEDULE
NOT TO SCALE

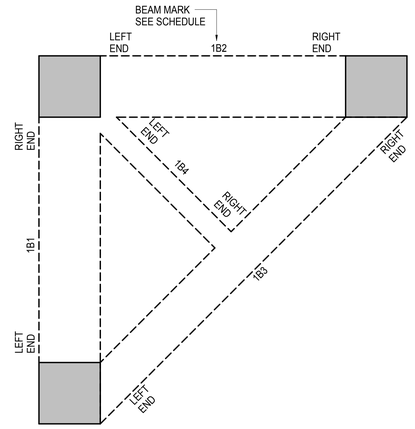

3 BEAM ORIENTATION KEY PLAN
NOT TO SCALE
CN-BM-03-WR

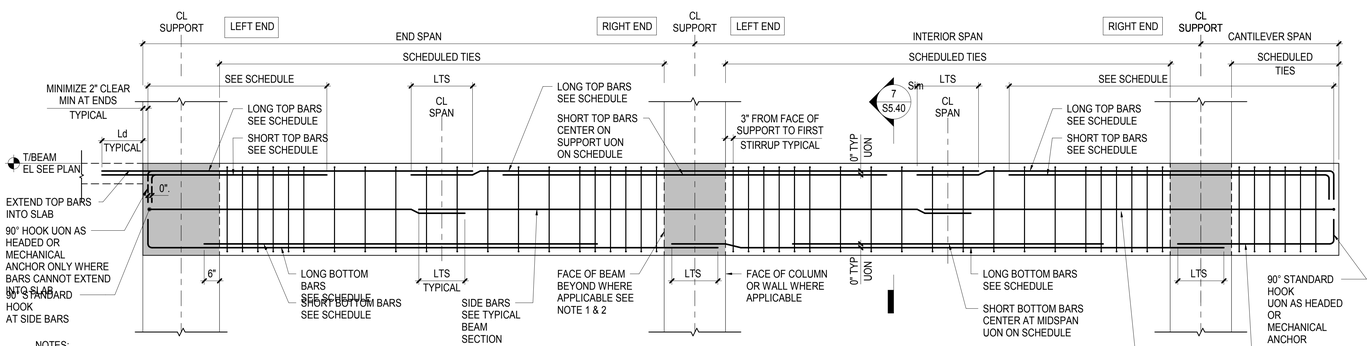

NOTES:

1. ELEVATION AS SHOWN REPRESENTS STIRRUP ARRANGEMENT AT COLUMN SUPPORTS
2. FOR TIES ARRANGEMENT AT BEAM SUPPORT SEE TYPICAL DETAILS AT BEAM JOINT SUPPORT
3. CONTRACTOR TO MINIMIZE NUMBER OF SPLICES
4. IF SPLICES ARE REQUIRED THE SPLICES SHALL BE LOCATED WHERE INDICATED ON THIS DETAIL

4 TYPICAL BEAM ELEVATION
NOT TO SCALE

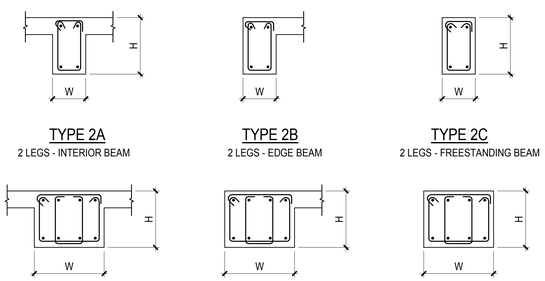

6 BEAM TIE TYPES
NOT TO SCALE

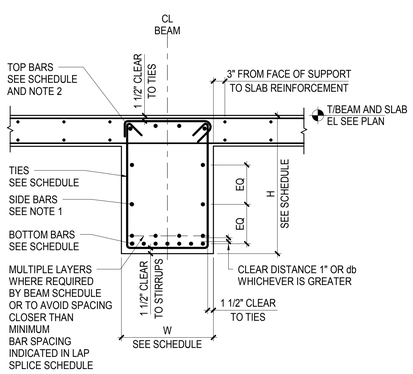

NOTES:

1. IF H IS GREATER THAN 36" PROVIDE SIDE BARS #5@10" MIN UON IN SCHEDULE
2. WHERE TWO LAYERS OF BARS ARE REQUIRED, TOP OR BOTTOM, PLACE SHORT BARS AS INNER LAYER

7 TYPICAL BEAM SECTION
NOT TO SCALE

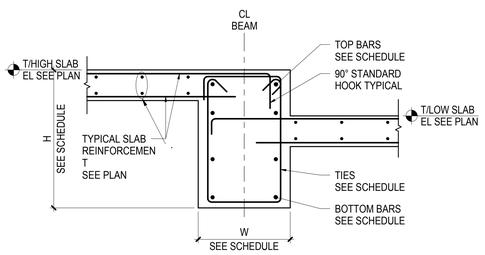

NOTE:

TYPICAL SLAB / BEAM DETAIL NOT SHOWN AT CHANGE OF SLAB ELEVATION

8
NOT TO SCALE

AXIS GFA
1130 WESTWOOD BLVD
LOS ANGELES, CA 90024
T 310.209.7520
F 310.209.7516
www.axisgfa.com

PROJECT NAME

Residence Inn® Marriott.

840 KILDARE STREET,
LANCASTER, CA

OWNER:

INSITE REAL STATE DEVELOPMENT
6265 VARIEL AVENUE
WOODLAND HILLS, CA 91367

Thornton Tomasetti
Thornton Tomasetti, Inc.
707 Wilshire Blvd, Suite 4450
Los Angeles, CA 90017-3618
T 213.330.7000 F 213.330.7001

Project Status

REGISTERED PROFESSIONAL ENGINEER CHARLES GANTRI HANSEN No. S4416 Exp. 6/30/18 STRUCTURAL STATE OF CALIFORNIA

NO.	DATE	ISSUES AND REVISIONS	BY
	10.13.17	DESIGN DEVELOPMENT	
	11.20.17	CD PROGRESS SET	
	12.18.17	PLAN CHECK	
	02.16.18	PLAN CHECK	

DATE

SCALE AS NOTED

PROJECT NUMBER

COMPUTER FILE S17081

PROJECT NAME

DESCRIPTION
TYPICAL CONCRETE BEAM DETAILS

SHEET NUMBER
S5.40

ALL DRAWINGS AND WRITTEN MATERIAL APPEARING HEREIN CONSTITUTE ORIGINAL AND UNPUBLISHED WORK OF THE ARCHITECT AND MAY NOT BE DUPLICATED, USED OR DISCLOSED WITHOUT WRITTEN CONSENT OF THE ARCHITECT

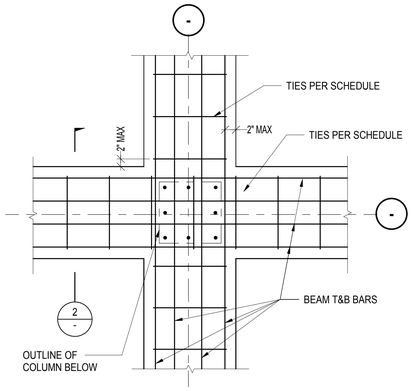

1 TYPICAL PLAN DETAIL AT BEAM/COLUMN INTERSECTION
NOT TO SCALE

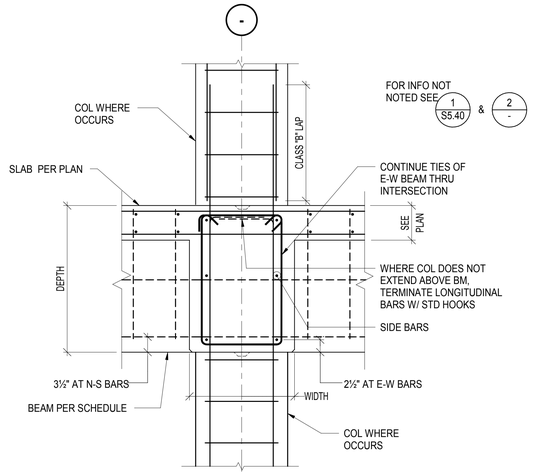

2 TYPICAL INTERSECTING BEAM DETAIL
NOT TO SCALE

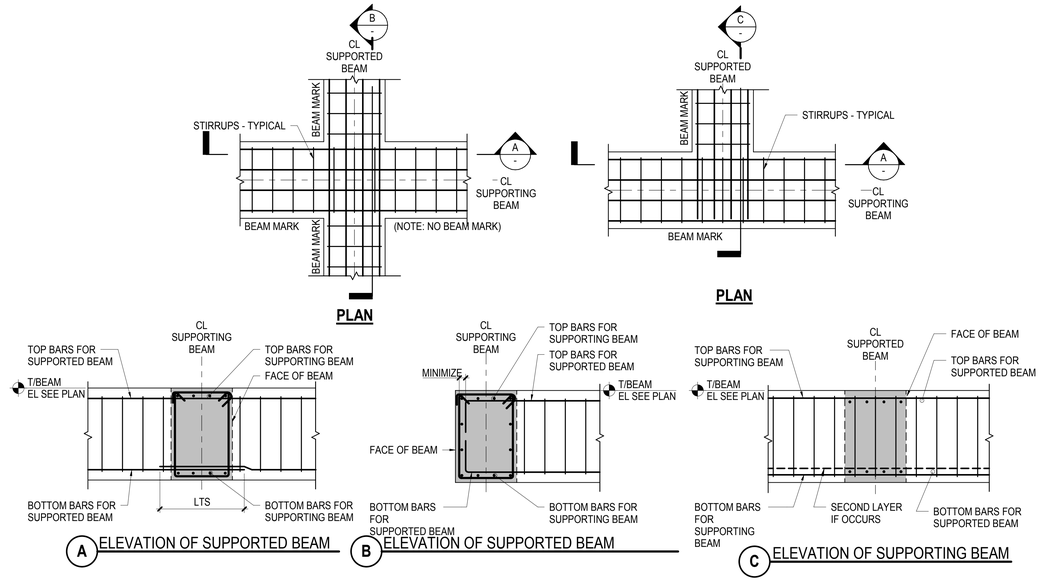

A ELEVATION OF SUPPORTED BEAM

B ELEVATION OF SUPPORTED BEAM

C ELEVATION OF SUPPORTING BEAM

3 TYPICAL DETAILS AT BEAM JOINT SUPPORT
NOT TO SCALE

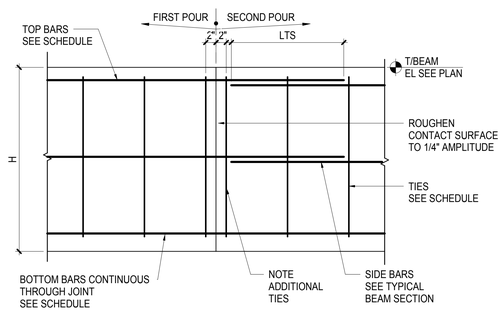

NOTES:

1. CONTRACTOR SHALL SUBMIT CONCRETE CONSTRUCTION JOINT LAYOUT FOR REVIEW AND APPROVAL (REFER TO GENERAL NOTES AND SPECIFICATIONS) PRIOR TO REINFORCEMENT SUBMITTAL.

2. HORIZONTAL CONSTRUCTION JOINTS ARE NOT PERMITTED WITHOUT WRITTEN APPROVAL FROM SER.

5 TYPICAL BEAM CONSTRUCTION JOINT - ELEVATION
NOT TO SCALE

AXIS GFA

1130 WESTWOOD BLVD
LOS ANGELES, CA 90024
T 310.209.7520
F 310.209.7516
www.axisgfa.com

PROJECT NAME

Residence Inn® Marriott.

840 KILDARE STREET,
LANCASTER, CA

OWNER:

INSITE REAL STATE
DEVELOPMENT
6265 VARIEL AVENUE
WOODLAND HILLS, CA 91367

Thornton Tomasetti
Thornton Tomasetti, Inc.
707 Wilshire Blvd, Suite 4450
Los Angeles, CA 90017-3618
T 213.330.7000 F 213.330.7001

Project Status

REGISTERED PROFESSIONAL ENGINEER
CHARLES QUINTRO
No. S4416
Exp. 6/30/18
STRUCTURAL
STATE OF CALIFORNIA

NO.	DATE	ISSUES AND REVISIONS	BY
	10.13.17	DESIGN DEVELOPMENT	
	11.20.17	CD PROGRESS SET	
	12.18.17	PLAN CHECK	
	02.16.18	PLAN CHECK	

DATE

SCALE AS NOTED

PROJECT NUMBER

COMPUTER FILE **S17081**

PROJECT NAME

DESCRIPTION
TYPICAL CONCRETE
BEAM DETAILS

SHEET NUMBER
S5.41

ALL DRAWINGS AND WRITTEN MATERIAL APPEARING HEREIN CONSTITUTE ORIGINAL AND UNPUBLISHED WORK OF THE ARCHITECT AND MAY NOT BE DUPLICATED, USED OR DISCLOSED WITHOUT WRITTEN CONSENT OF THE ARCHITECT

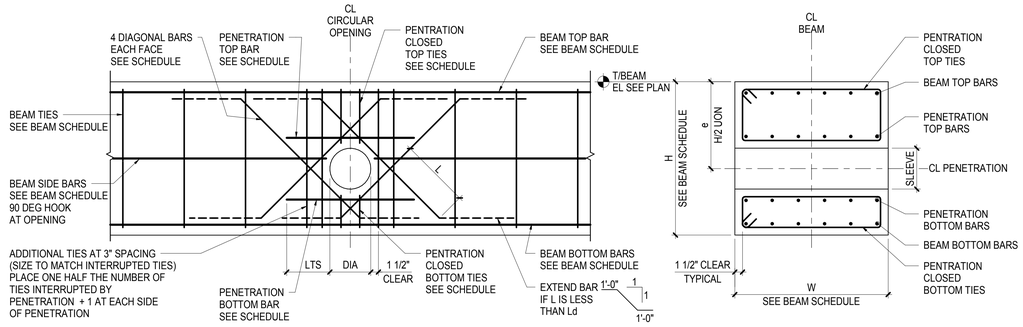

NOTES:

1. ALL BEAM PENETRATIONS SHALL BE SHOWN ON THE SHOP DRAWINGS FOR REVIEW BY THE ARCHITECT/ENGINEER. NO PENETRATIONS SHALL BE MADE WITHOUT PRIOR REVIEW BY THE ARCHITECT AND WRITTEN APPROVAL FROM THE SER
2. THESE DETAILS SHALL BE USED IN CONJUNCTION WITH CONCRETE BEAM PENETRATION SCHEDULE
3. THE MINIMUM CLEAR SPACE BETWEEN TWO ADJACENT PENETRATIONS SHALL BE GREATER OF THE LARGEST PENETRATION DIMENSION OR TWO TIMES THE BEAM DEPTH
4. THE MINIMUM CLEAR DIMENSION BETWEEN THE EDGE OF A PENETRATION AND THE FACE OF SUPPORT , FACE OF SUPPORTED BEAM, OR POINT LOAD IMPOSED, SHALL BE THE BEAM DEPTH
5. SEE STRUCTURAL DRAWINGS FOR PENETRATIONS. GENERAL CONTRACTOR SHALL VERIFY QUANTITY, SIZE, AND LOCATION OF ALL PENETRATIONS WITH MEP DRAWINGS. NOTIFY SER IN WRITING OF ANY DISCREPANCIES FOR REVIEW AND APPROVAL
6. THE ADDITIONAL REINFORCEMENT SHOWN HERE IS NOT REQUIRED FOR OPENINGS 4" IN DIAMETER OR SMALLER PROVIDED NO BEAM REINFORCEMENT IS INTERRUPTED AND MINIMUM CONCRETE COVER IS PROVIDED AROUND ALL BARS. IT IS ACCEPTABLE TO ADJUST BEAM REINFORCEMENT WITHIN MAXIMUM SPACING LIMITS FOR TIES OR SIDE BARS

1 TYPICAL CONCRETE BEAM WITH CIRCULAR PENETRATION

NOT TO SCALE

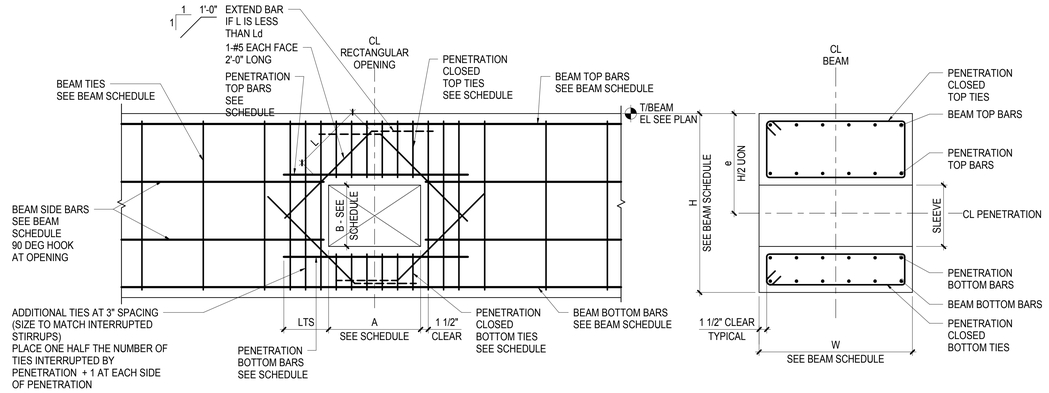

NOTES:

1. ALL BEAM PENETRATIONS SHALL BE SHOWN ON THE SHOP DRAWINGS FOR REVIEW BY THE ARCHITECT/ENGINEER. NO PENETRATIONS SHALL BE MADE WITHOUT PRIOR REVIEW BY THE ARCHITECT AND WRITTEN APPROVAL FROM THE SER
2. THESE DETAILS SHALL BE USED IN CONJUNCTION WITH CONCRETE BEAM PENETRATION SCHEDULE
3. THE MINIMUM CLEAR SPACE BETWEEN TWO ADJACENT PENETRATIONS SHALL BE GREATER OF THE LARGEST PENETRATION DIMENSION OR TWO TIMES THE BEAM DEPTH
4. THE MINIMUM CLEAR DIMENSION BETWEEN THE EDGE OF A PENETRATION AND THE FACE OF SUPPORT , FACE OF SUPPORTED BEAM, OR POINT LOAD IMPOSED, SHALL BE THE BEAM DEPTH
5. SEE STRUCTURAL DRAWINGS FOR PENETRATIONS. GENERAL CONTRACTOR SHALL VERIFY QUANTITY, SIZE, AND LOCATION OF ALL PENETRATIONS WITH MEP DRAWINGS. NOTIFY SER IN WRITING OF ANY DISCREPANCIES FOR REVIEW AND APPROVAL
6. THE ADDITIONAL REINFORCEMENT SHOWN HERE IS NOT REQUIRED FOR OPENINGS 4"x4" OR SMALLER PROVIDED NO BEAM REINFORCEMENT IS INTERRUPTED AND MINIMUM CONCRETE COVER IS PROVIDED AROUND ALL BARS. IT IS ACCEPTABLE TO ADJUST BEAM REINFORCEMENT WITHIN MAXIMUM SPACING LIMITS FOR TIES OR SIDE BARS

2 TYPICAL CONCRETE BEAM WITH RECTANGULAR PENETRATION

NOT TO SCALE

CONCRETE BEAM PENETRATION SCHEDULE

MARK	MAX SIZE				REINFORCEMENT				DIAGONAL BARS AT CIRCULAR PENETRATION	REMARKS
	A (IN)	B (IN)	DIA (IN)	e (IN)	TOP BARS	BOTTOM BARS	TOP STIRRUPS	BOTTOM STIRRUPS		

NOTES:

1. ALL BEAM PENETRATIONS SHALL BE SHOWN ON THE SHOP DRAWINGS FOR REVIEW BY THE ARCHITECT/ENGINEER. NO PENETRATIONS SHALL BE MADE WITHOUT PRIOR REVIEW BY THE ARCHITECT AND WRITTEN APPROVAL FROM THE SER.
2. SEE TYPICAL CONCRETE BEAM WITH CIRCULAR PENETRATION AND TYPICAL CONCRETE BEAM WITH RECTANGULAR PENETRATION DETAILS

3 CONCRETE BEAM PENETRATION SCHEDULE

NOT TO SCALE

AXIS GFA

1130 WESTWOOD BLVD
LOS ANGELES, CA 90024
T 310.209.7520
F 310.209.7516
www.axisgfa.com

PROJECT NAME

Residence Inn® Marriott.

840 KILDARE STREET,
LANCASTER, CA

OWNER:

INSITE REAL STATE
DEVELOPMENT
6265 VARIEL AVENUE
WOODLAND HILLS, CA 91367

Thornton Tomasetti
Thornton Tomasetti, Inc.
707 Wilshire Blvd, Suite 4450
Los Angeles, CA 90017-3618
T 213.330.7000 F 213.330.7001

Project Status

REGISTERED PROFESSIONAL ENGINEER
CHAKAR QANTRI, CHAIRMAN
No. S4416
Exp. 6/30/18
STRUCTURAL
STATE OF CALIFORNIA

NO.	DATE	ISSUES AND REVISIONS	BY
	10.13.17	DESIGN DEVELOPMENT	
	11.20.17	CD PROGRESS SET	
	12.18.17	PLAN CHECK	
	02.16.18	PLAN CHECK	

DATE

SCALE AS NOTED

PROJECT NUMBER

COMPUTER FILE S17081

PROJECT NAME

DESCRIPTION
TYPICAL CONCRETE
BEAM DETAILS

SHEET NUMBER
S5.42

ALL DRAWINGS AND WRITTEN MATERIAL APPEARING HEREIN CONSTITUTE ORIGINAL AND UNPUBLISHED WORK OF THE ARCHITECT AND MAY NOT BE DUPLICATED, USED OR DISCLOSED WITHOUT WRITTEN CONSENT OF THE ARCHITECT

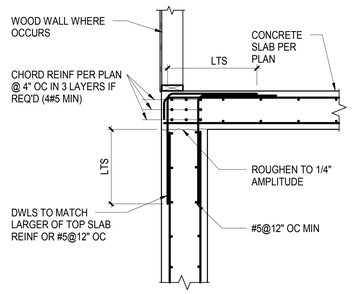

1 SECTION
3/4" = 1'-0"

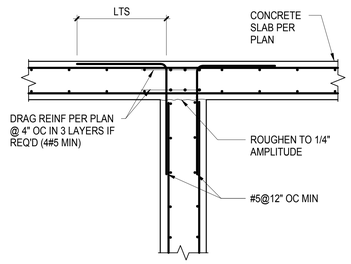

2 SECTION
3/4" = 1'-0"

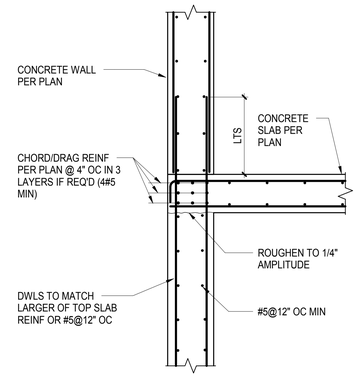

3 SECTION
3/4" = 1'-0"

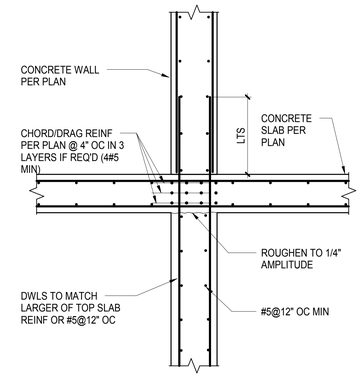

4 SECTION
3/4" = 1'-0"

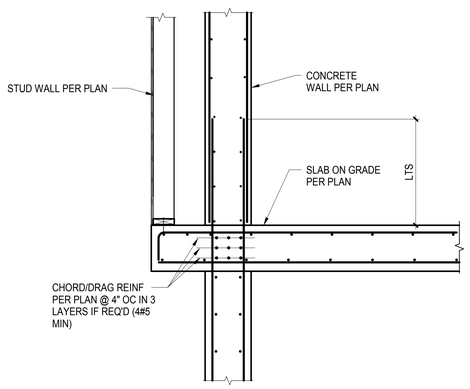

5 SECTION
3/4" = 1'-0"

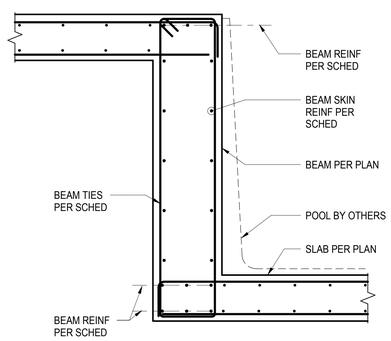

6 SECTION
3/4" = 1'-0"

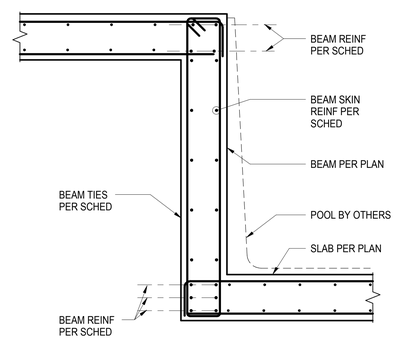

7 SECTION
3/4" = 1'-0"

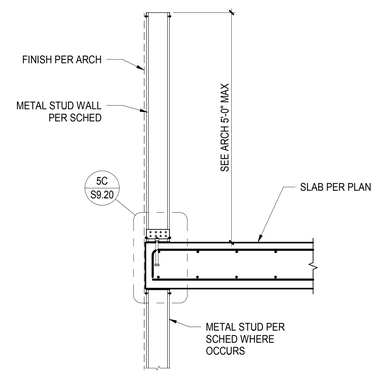

8 SECTION
3/4" = 1'-0"

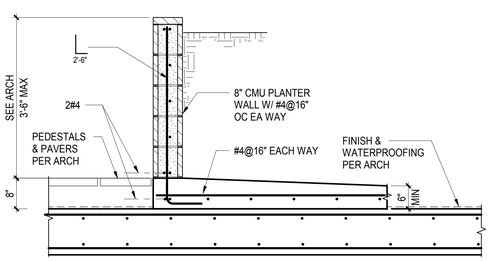

9 SECTION
3/4" = 1'-0"

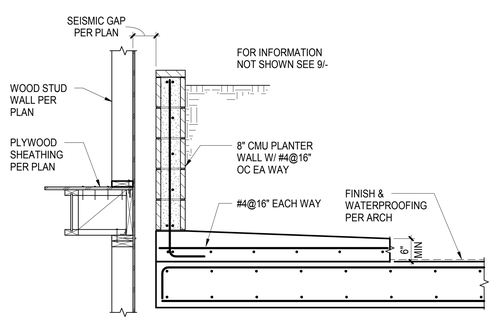

10 SECTION
3/4" = 1'-0"

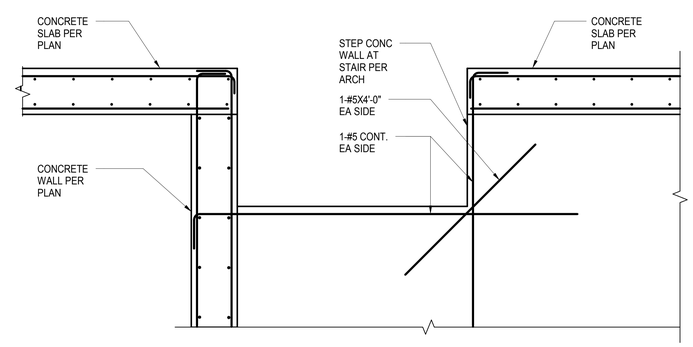

11 SECTION
3/4" = 1'-0"

AXIS GFA
1130 WESTWOOD BLVD
LOS ANGELES, CA 90024
T 310.209.7520
F 310.209.7516
www.axisgfa.com

PROJECT NAME

Residence Inn® Marriott.

840 KILDARE STREET,
LANCASTER, CA

OWNER:

INSITE REAL STATE DEVELOPMENT
6265 VARIEL AVENUE
WOODLAND HILLS, CA 91367

Thornton Tomasetti
Thornton Tomasetti, Inc.
707 Wilshire Blvd, Suite 4450
Los Angeles, CA 90017-3618
T 213.330.7000 F 213.330.7001

Project Status

REGISTERED PROFESSIONAL ENGINEER
CHARLES GANTRI FORSTER
No. S4416
Exp. 6/30/18
STRUCTURAL
STATE OF CALIFORNIA

NO.	DATE	ISSUES AND REVISIONS	BY
	10.13.17	DESIGN DEVELOPMENT	
	11.20.17	CD PROGRESS SET	
	12.18.17	PLAN CHECK	
	02.16.18	PLAN CHECK	

DATE

SCALE AS NOTED

PROJECT NUMBER

COMPUTER FILE S17081

PROJECT NAME

DESCRIPTION
CONCRETE DETAILS

SHEET NUMBER
S5.60

ALL DRAWINGS AND WRITTEN MATERIAL APPEARING HEREIN CONSTITUTE ORIGINAL AND UNPUBLISHED WORK OF THE ARCHITECT AND MAY NOT BE DUPLICATED, USED OR DISCLOSED WITHOUT WRITTEN CONSENT OF THE ARCHITECT

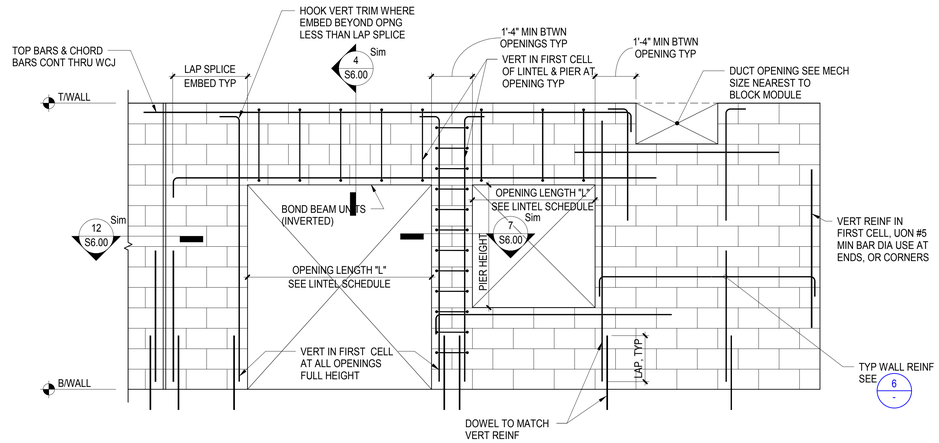

1 CMU WALL ELEVATION W/ OPENING
NOT TO SCALE

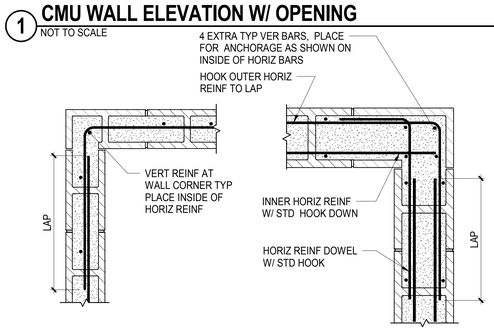

8" CMU WALL 12" CMU WALL

A AT CORNERS

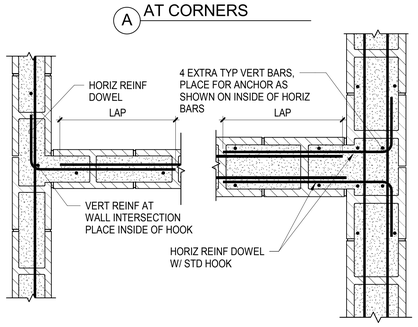

8" CMU WALL 12" CMU WALL

B AT INTERSECTIONS

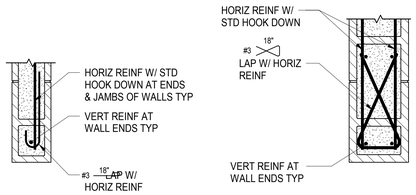

8" CMU WALL 12" CMU WALL

C AT ENDS

9 CMU WALL CORNERS AND INTERSECTIONS
NOT TO SCALE

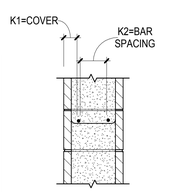

K=MINIMUM (K1 OR K2)

LAP SPLICE LENGTH (f 'm=1500PSI)			
BAR SIZE	FOR K≥2db	FOR K≥3db	FOR K≥4db
#3	N/A	2'-2"	1'-7"
#4	3'-0"	2'-10"	2'-2"
#5	3'-9"	3'-6"	2'-8"
#6	4'-6"	4'-6"	4'-2"
#7	5'-3"	5'-3"	4'-10"
#8	6'-0"	6'-0"	6'-0"
#9	6'-10"	6'-10"	6'-10"

NOTES:

1. "K" SHALL BE TAKEN AS THE CMU COVER DIMENSION OR THE CLEAR SPACING BETWEEN ADJACENT BARS, WHICHEVER IS LESS. SEE ABOVE.
2. WHERE EPOXY-COATED REINFORCING IS USED, INCREASE LAP SPLICE LENGTH BY 50%.
3. SPLICES OF HORIZONTAL REINFORCEMENT IN WALLS SHALL BE STAGGERED.
4. SPLICES OF HORIZONTAL REINFORCEMENT IN WALLS CONTAINING TWO CURTAINS OF REINFORCEMENT SHALL NOT OCCUR IN THE SAME LOCATION.
5. "N/A" MEANS "NOT ALLOWABLE" INCREASE "K" FOR ALLOWABLE LAP SPLICE.

6 REBAR OFFSET AND LAP SPLICE CMU f 'm=1500 PSI
NOT TO SCALE

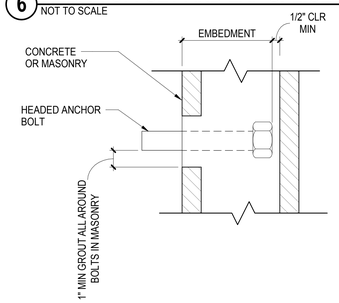

NOTES:

1. MINIMUM BOLT SPACING SHALL BE 8 BOLT DIAMEMTERS WITH A MINIMUM EDGE DISTANCE OF 6 DIAMETER AND WITH A MINIMUM OF 6" TO END OF WALL.
2. BOLTS SHALL BE ASTM A307 HEADED HEX HOLTS OR A36 PLAIN TOD WITH TREADED ENDS AND DOUBLE HEX NUTS.

BOLT SIZE	EMBEDMENT
1/2"	4"
3/8"	4"
3/4"	5"
7/8"	6"
1"	7"
1 1/8"	8"

10 BOLT EMBEDMENT SCHEDULE
NOT TO SCALE

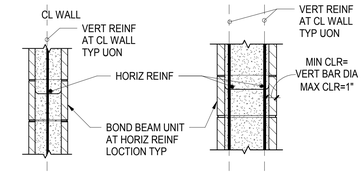

8" CMU WALL 12" CMU WALL

SECTION VIEW

REINFORCING SCHEDULE FOR CONCRETE MASONRY WALL UON				
WALL TYPE	NOMINAL THICKNESS	VERTICAL REINF	HORIZONTAL REINF	No. OF REINF CURTAIN
CMU1	6"	#5 @ 16" OC	#4 @ 24" OC	SINGLE
CMU2	8"	#5 @ 16" OC	#4 @ 24" OC	SINGLE
CMU3	12"	#6 @ 16" OC	#5 @ 16" OC	SINGLE

NOTES:

1. SEE PLANS FOR WALL TYPE LOCATIONS.
2. LAP SPLICE REINFORCING PER 6 -
3. CMU SHALL BE RUNNING BOND & FULLY GROUTED UON
4. USE DOUBLE OPEN END BLOCKS TO THE EXTENT PRACTICAL TYP DO NOT PLACE CLOSED SIDES BACK TO BACK.
5. SEE STRUCTURAL GENERAL NOTES FOR MATERIAL SPECIFICATIONS
6. FOR WALL CONTRUCTION & CONTROL JOINT SEE DETAIL 12 -
7. FOR WALL CORNERS & INTERSECTIONS SEE DETAIL 9 -

3 CMU WALL REINFORCING SCHEDULE
NOT TO SCALE

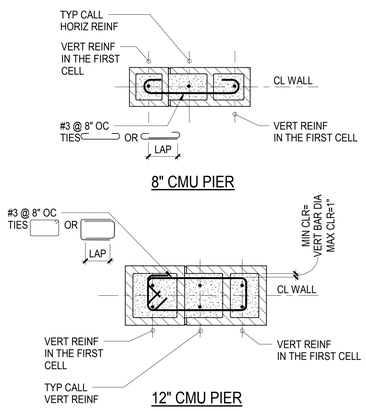

NOTES:

1. USE WALL PIER DETAIL WHERE:
   - PIER LENGTH<5x WALL "t"
   - PIER HEIGHT>2x PIER LENGTH
2. EXTEND HORIZONTAL TIES LAP SPLICE LENGTH ABOVE & BELOW OPENING

7 WALL PIER DETAIL
NOT TO SCALE

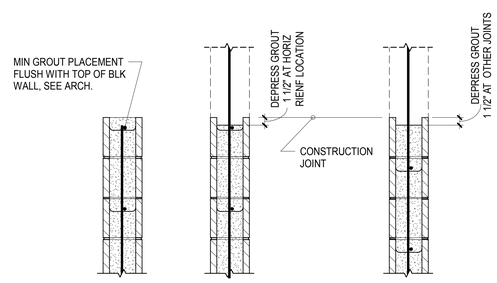

WALL SECTION

11 CMU WALL CONSTRUCTION JOINTS
NOT TO SCALE

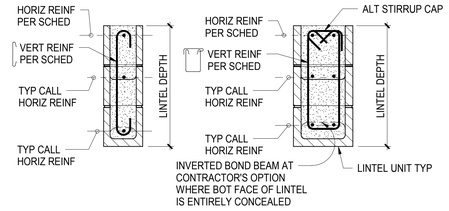

A 8" WALL B 12" WALL

REINFORCING SCHEDULE FOR LINTEL CMU WALL					
OPENING LENGTH	MIN LINTEL DEPTH	6"-8" WALL		12" WALL	
		HORIZ	VERT	HORIZ	VERT
L ≤ 4'-0"	2'-0"	#5	#3 @ 6" OC	2-#5	#3 @ 6" OC
L ≤ 6'-0"	2'-8"	#5	#3 @ 8" OC	2-#6	#3 @ 8" OC
L ≤ 8'-0"	2'-8"	#6	#3 @ 8" OC	2-#7	#3 @ 8" OC

4 WALL LINTEL DETAIL AND SCHEDULE
NOT TO SCALE

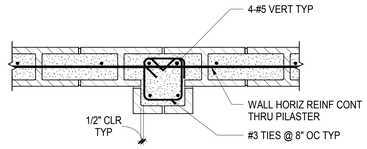

A MID WALL

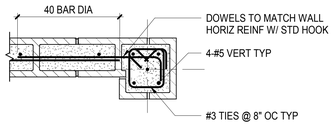

B END OF WALL

8 PILASTER DETAIL
NOT TO SCALE

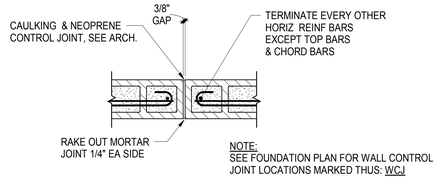

NOTE:
SEE FOUNDATION PLAN FOR WALL CONTROL JOINT LOCATIONS MARKED THUS: WCJ

WALL PLAN

12 CMU WALL CONTROL JOINT
NOT TO SCALE

AXIS GFA
1130 WESTWOOD BLVD
LOS ANGELES, CA 90024
T 310.209.7520
F 310.209.7516
www.axisgfa.com

PROJECT NAME

Residence Inn® Marriott.

840 KILDARE STREET,
LANCASTER, CA

OWNER:

INSITE REAL STATE DEVELOPMENT
6265 VARIEL AVENUE
WOODLAND HILLS, CA 91367

Thornton Tomasetti
Thornton Tomasetti, Inc.
707 Wilshire Blvd, Suite 4450
Los Angeles, CA 90017-3618
T 213.330.7000 F 213.330.7001

Project Status

REGISTERED PROFESSIONAL ENGINEER STEPHANIE GRAUER No. S44416 Exp. 6/30/18 STRUCTURAL STATE OF CALIFORNIA

NO.	DATE	ISSUES AND REVISIONS	BY
	10.13.17	DESIGN DEVELOPMENT	
	11.20.17	CD PROGRESS SET	
	12.18.17	PLAN CHECK	
	02.16.18	PLAN CHECK	

DATE

SCALE AS NOTED

PROJECT NUMBER

COMPUTER FILE S17081

PROJECT NAME

DESCRIPTION
TYPICAL CMU DETAILS

SHEET NUMBER
S6.00

ALL DRAWINGS AND WRITTEN MATERIAL APPEARING HEREIN CONSTITUTE ORIGINAL AND UNPUBLISHED WORK OF THE ARCHITECT AND MAY NOT BE DUPLICATED, USED OR DISCLOSED WITHOUT WRITTEN CONSENT OF THE ARCHITECT

NOTES:

1. ALL PLATES SHALL BE ASTM A572 GRADE 50 MINIMUM
2. ALL BOLTS SHALL BE ASTM A325 MINIMUM PRE-TENSIONED IN STANDARD HOLES
3. LIFTING LUGS AND ERECTION AIDS ARE THE RESPONSIBILITY OF THE CONTRACTOR
4. FAYING SURFACES SHALL MEET MINIMUM SC-A REQUIREMENTS
5. 3/4" MAXIMUM LOOSE FILL PLATE EACH FLANGE. WHERE THICKER PLATES ARE REQUIRED, USE 7/8" DIAMETER SLIP CRITICAL BOLTS MINIMUM
6. S=3" FOR BOLTS 1" DIAMETER OR LESS, S=3-1/2" FOR 1-1/8" DIAMETER BOLTS
7. THIS CONNECTION IS MINIMUM FOR FINAL DESIGN STRUCTURAL REQUIREMENTS. THE CONTRACTOR SHALL VERIFY CAPACITY FOR TEMPORARY CONDITIONS.
8. FOR NOMINAL SIZE DIFFERENCES > 2", SEE DETAIL SX.XX

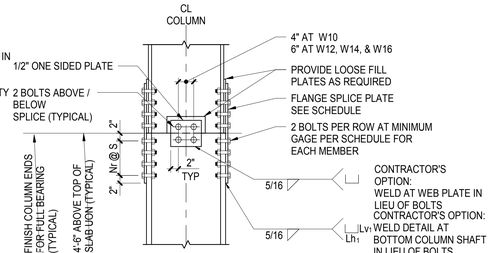

A UPPER COLUMN OF SAME NOMINAL SIZE

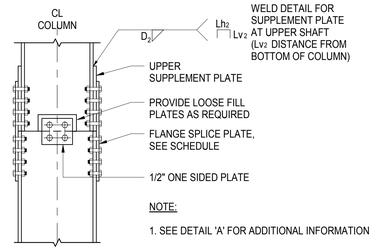

B UPPER COLUMN 2" (MAX) NOMINAL SMALLER

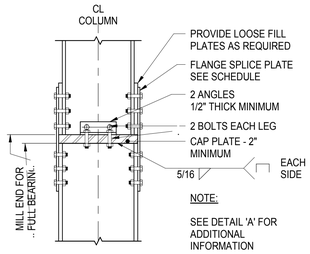

C UPPER COLUMN OF 2" (MAX) NOMINAL SMALLER

UPPER COLUMN SIZE	BOLT		FLANGE SPLICE PLATE			ALT WELD		WELD AT UPPER SUPPLEMENT PLATE		
	NO OF BOLT ROWS Nr	BOLT DIA	WIDTH	THICKNESS	MIN GAGE	MIN L_{h1}	MIN L_{v1}	MIN D_2	MIN L_{h2}	MIN L_{v2}
W16 X 67 TO 100	4		10"	3/8"	5 1/2"	4	6	7/16	8	26
W14 X 455 & OVER	4		16"	3/4"	13 1/2"	10	7	NA	NA	NA
W14 X 257 TO 426	4		14"	3/4"	11 1/2"	8	8	NA	NA	NA
W14 X 145 TO 233	4		14"	1/2"	11 1/2"	8	7	NA	NA	NA
W14 X 90 TO 132	3		14"	1/2"	11 1/2"	8	7	NA	NA	NA
W14 X 61 TO 82	3		10"	3/8"	5 1/2"	6	6	5/16	8	30
W14 X 43 TO 53	3		8"	3/8"	5 1/2"	4	6	5/16	7	19
W12 X 120 TO 336	4		12"	5/8"	5 1/2"	6	7	NA	NA	NA
W12 X 40 TO 106	3		8"	1/2"	5 1/2"	6	7	1/2	6	25
W10 X 33 TO 112	3		8"	3/8"	5 1/2"	6	6	1/2	6	26

1 TYPICAL BOLTED GRAVITY COLUMN SPLICE
NOT TO SCALE

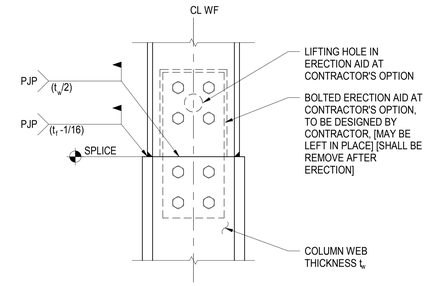

3 TYPICAL WELDED GRAVITY COLUMN SPLICES
NOT TO SCALE

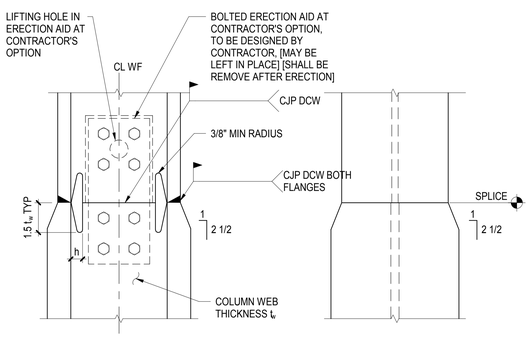

NOTES:
1. t_w IS THE LARGER WEB THICKNESS OF COLUMNS BEING JOINED.
2. h = 1.5 t_w BUT NOT LESS THAN 1", NOR GREATER THAN 2".
3. REMOVE FLANGE BACKING BARS AND RUN-OFF TABS. GRIND TO AWS ACCEPTABLE PROFILE.
4. COLUMN SPLICES MAY BE SHOP WELDED AT CONTRACTOR'S OPTION.

5 TYPICAL FRAME COLUMN SPLICE
NOT TO SCALE

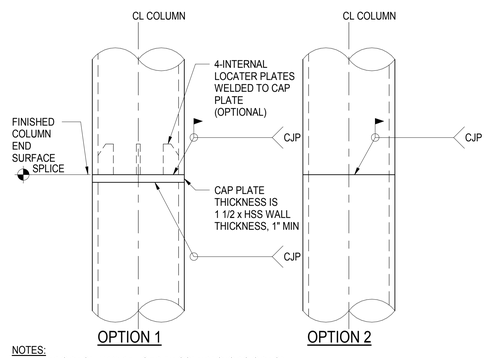

NOTES:
1. EITHER OPTION MAY BE USED AT CONTRACTOR'S OPTION.
2. COLUMN SPLICES MAY BE SHOP WELDED AT CONTRACTOR'S OPTION. SEE COLUMN SCHEDULE FOR SPLICE LOCATIONS.

6 TYPICAL HSS/PIPE COLUMN WELDED SPLICE UPPER AND LOWER COLUMN SAME WIDTH
NOT TO SCALE

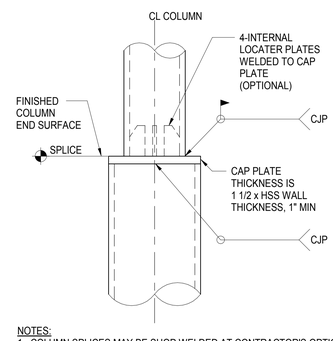

NOTES:
1. COLUMN SPLICES MAY BE SHOP WELDED AT CONTRACTOR'S OPTION. SEE COLUMN SCHEDULE FOR SPLICE LOCATIONS.

7 TYPICAL HSS/PIPE COLUMN WELDED SPLICE UPPER COLUMN SMALLER THAN LOWER COLUMN
NOT TO SCALE

AXIS GFA
1130 WESTWOOD BLVD
LOS ANGELES, CA 90024
T 310.209.7520
F 310.209.7516
www.axisgfa.com

PROJECT NAME

Residence Inn® Marriott.

840 KILDARE STREET,
LANCASTER, CA

OWNER:

INSITE REAL STATE DEVELOPMENT
6265 VARIEL AVENUE
WOODLAND HILLS, CA 91367

Thornton Tomasetti
Thornton Tomasetti, Inc.
707 Wilshire Blvd, Suite 4450
Los Angeles, CA 90017-3618
T 213.330.7000 F 213.330.7001

Project Status

REGISTERED PROFESSIONAL ENGINEER CHARANJIT GANTRE No. S4416 Exp. 6/30/18 STRUCTURAL STATE OF CALIFORNIA

NO.	DATE	ISSUES AND REVISIONS	BY
	10.13.17	DESIGN DEVELOPMENT	
	11.20.17	CD PROGRESS SET	
	12.18.17	PLAN CHECK	
	02.16.18	PLAN CHECK	

DATE

SCALE AS NOTED

PROJECT NUMBER

COMPUTER FILE S17081

PROJECT NAME

DESCRIPTION
TYPICAL STEEL DETAILS

SHEET NUMBER
S7.01

ALL DRAWINGS AND WRITTEN MATERIAL APPEARING HEREIN CONSTITUTE ORIGINAL AND UNPUBLISHED WORK OF THE ARCHITECT AND MAY NOT BE DUPLICATED, USED OR DISCLOSED WITHOUT WRITTEN CONSENT OF THE ARCHITECT

DEPTH OR SIZE OF SMALLER BEAM	ONE ROW OF BOLTS			TWO ROWS OF BOLTS		
	NO OF BOLTS(2), (3) 7/8" DIA A325N UON	SHEAR(6) PLATE	WELD(1) SIZE "S"	NO OF BOLTS(3) PER ROW, 7/8" DIA A325SC UON	SHEAR(6) PLATE	WELD(1) SIZE "S"
9", 10"	2	3/8	1/4"	2	5/8	7/16"
12", 14", C12, MC12	3	3/8	1/4"	3	5/8	7/16"
16"	4	3/8	1/4"	4	5/8	7/16"
18"	4	3/8	1/4"	4	5/8	7/16"
21"	5	3/8	1/4"	5	5/8	7/16"
24"	6	3/8	1/4"	6	5/8	7/16"
27"	7	1/2	5/16"	7	5/8	7/16"
30"	8	1/2	5/16"	8	5/8	7/16"
33" AND LARGER	9	1/2	5/16"	9	5/8	7/16"

NOTES:
1. USE LARGER WELDS OR COMPLETE PENETRATION WELDS AT ALL SKEWED CONNECTIONS PER DETAILS 7 AND 8 ON SHEET S5-201.
2. MARKS [1] ON PLANS DENOTE 1" DIA BOLTS.
3. MARKS [2] ON PLANS DENOTE 2 ROWS OF BOLTS. EACH ROW TO HAVE THE NUMBER OF BOLTS IN THE TABLE ABOVE. SPACE ROWS AT 3" ON CENTER.
4. MARKS [F] ON PLANS DENOTE FLANGE BRACE, SEE DETAIL 9 ON SHEET S5-220.
5. MARKS [T] ON PLANS DENOTE WELDED TOP FLANGE, SEE DETAIL XX ON SHEET S5-XXX.
6. ASTM A36.
7. DEPTH OR SIZE CORRESPONDS TO THE SMALLEST BEAM. SEE 5/S5-211.
8. PROVIDE SLIP CRITICAL CONNECTIONS AT ALL SLRS FRAMING.

1 BEAM CONNECTION SCHEDULE
3/4" = 1'-0"

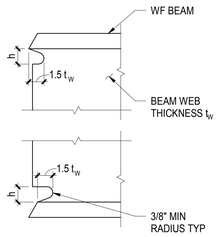

NOTES:
1. t_W IS THE BEAM WEB THICKNESS.
2. h = 1.5 t_W, BUT NOT LESS THAN 1", NOR GREATER THAN 2"

2 WELD ACCESS HOLES AT WF BEAMS
1 1/2" = 1'-0"

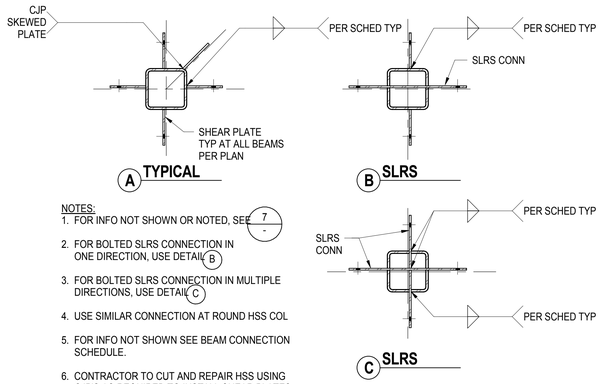

NOTES:
1. FOR INFO NOT SHOWN OR NOTED, SEE 7/-
2. FOR BOLTED SLRS CONNECTION IN ONE DIRECTION, USE DETAIL B
3. FOR BOLTED SLRS CONNECTION IN MULTIPLE DIRECTIONS, USE DETAIL C
4. USE SIMILAR CONNECTION AT ROUND HSS COL
5. FOR INFO NOT SHOWN SEE BEAM CONNECTION SCHEDULE.
6. CONTRACTOR TO CUT AND REPAIR HSS USING CJP'S AS REQUIRED TO INSTALL SHEAR PLATES FOR DETAIL C
7. SUBSTITUTE DETAIL B OR C FOR DETAIL AT ENDS OF COLLECTOR LINES.

3 BEAM TO HSS COLUMN CONNECTION
1" = 1'-0"

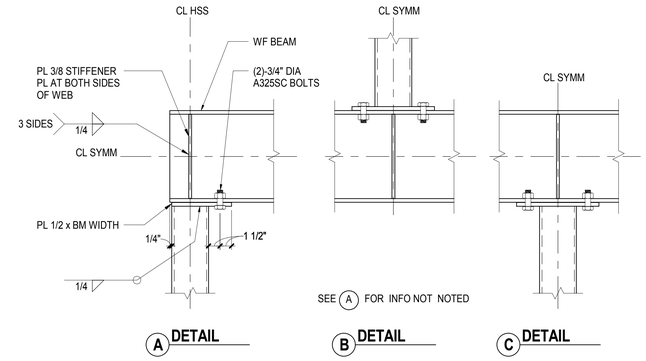

4 BEAM TO HSS COLUMN CONNECTION
1 1/2" = 1'-0"

NOTES:
1. db DENOTES BOLT DIAMETER.
2. FOR INFO NOT SHOWN SEE BEAM CONNECTION SCHEDULE

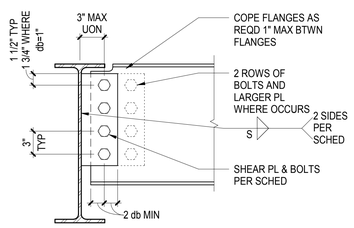

A SHALLOW SUPPORTED BEAM

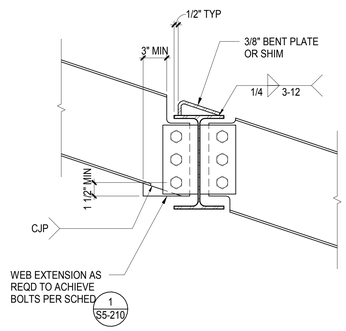

5 SLOPED BEAM CONNECTION
1 1/2" = 1'-0"

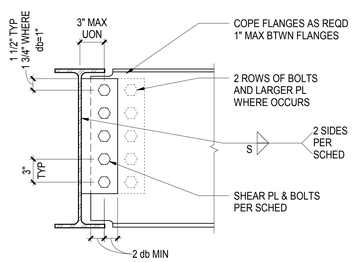

B EQUAL DEPTH

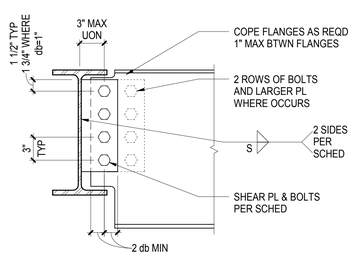

C DEEP SUPPORTED BEAM

9 BEAM TO BEAM CONNECTION
1 1/2" = 1'-0"

AXIS GFA
1130 WESTWOOD BLVD
LOS ANGELES, CA 90024
T 310.209.7520
F 310.209.7516
www.axisgfa.com

PROJECT NAME

Residence Inn® Marriott.

840 KILDARE STREET,
LANCASTER, CA

OWNER:

INSITE REAL STATE DEVELOPMENT
6265 VARIEL AVENUE
WOODLAND HILLS, CA 91367

Thornton Tomasetti
Thornton Tomasetti, Inc.
707 Wilshire Blvd, Suite 4450
Los Angeles, CA 90017-3618
T 213.330.7000 F 213.330.7001

Project Status

REGISTERED PROFESSIONAL ENGINEER GARNIK GANIRE TAVASSIE No. S4416 Exp. 6/30/18 STRUCTURAL STATE OF CALIFORNIA

NO.	DATE	ISSUES AND REVISIONS	BY
	10.13.17	DESIGN DEVELOPMENT	
	11.20.17	CD PROGRESS SET	
	12.18.17	PLAN CHECK	
	02.16.18	PLAN CHECK	

DATE
SCALE AS NOTED
PROJECT NUMBER
COMPUTER FILE S17081
PROJECT NAME

DESCRIPTION
TYPICAL STEEL DETAILS

SHEET NUMBER
S7.10

ALL DRAWINGS AND WRITTEN MATERIAL APPEARING HEREIN CONSTITUTE ORIGINAL AND UNPUBLISHED WORK OF THE ARCHITECT AND MAY NOT BE DUPLICATED, USED OR DISCLOSED WITHOUT WRITTEN CONSENT OF THE ARCHITECT

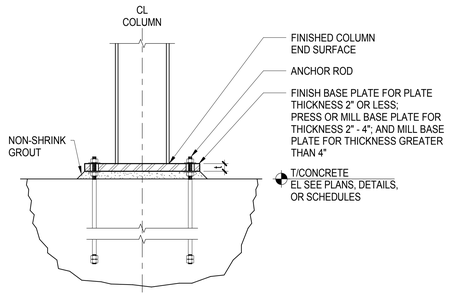

ELEVATION

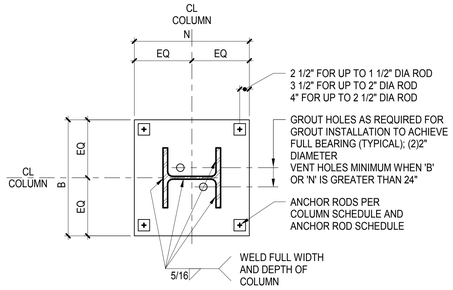

W8, W10, W12, W14 PLAN
WITH SQUARE ANCHOR ROD PATTERN
OUTSIDE COLUMN

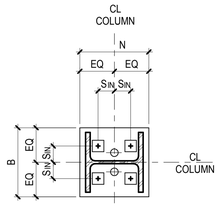

NOTE:
SEE ANCHOR ROD PATTERN OUTSIDE
COLUMN FOR INFORMATION NOT SHOWN

W10, W12, W14 PLAN
WITH SQUARE ANCHOR ROD PATTERN
INSIDE COLUMN - SEE TABLE

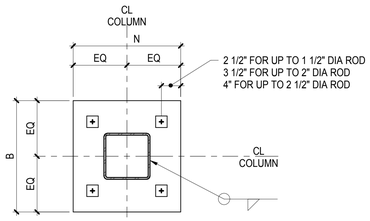

ROUND OR RECTANGULAR HSS PLAN

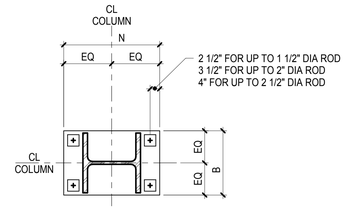

NOTE:
SEE ANCHOR ROD PATTERN OUTSIDE
COLUMN FOR INFORMATION NOT SHOWN

RECTANGULAR BASE PLATE
AT WIDE FLANGE COLUMN
WITH RECTANGULAR ANCHOR ROD
PATTERN OUTSIDE COLUMN

S IN FOR SQUARE ANCHOR ROD PATTERN INSIDE COLUMN	
SHAPE	SIN
W8	NA
W10	2 1/2"
W12	3"
W14	4"

NOTES FOR TABLE:

1. INSIDE ANCHOR ROD CONFIGURATION NOT APPLICABLE TO ROD DIAMETERS GREATER THAN 1 1/4" FOR W14, 1" FOR W12, AND 3/4" FOR W10. INSIDE BOLT CONFIGURATION NOT APPLICABLE TO W8
2. INSIDE ANCHOR ROD CONFIGURATION NOT APPLICABLE TO COLUMNS HEAVIER THAN W14X426

NOTES:

1. SEE COLUMN SCHEDULE FOR BASE PLATE SIZE, ORIENTATION AND THICKNESS
2. BASE PLATE THICKNESS SHOWN ON SCHEDULE IS A MINIMUM. DIMENSION AFTER ALL MILLING IS COMPLETED
3. COLUMN STABILITY DURING ERECTION IS RESPONSIBILITY OF CONTRACTOR
4. SEE ANCHOR ROD SCHEDULE AND TYPICAL ANCHOR ROD DETAIL FOR ADDITIONAL INFORMATION
5. CONTRACTOR'S OPTION TO FIELD WELD COLUMNS TO BASEPLATES FOR HEAVY BASEPLATES
6. ANCHOR ROD CONFIGURATION IS TO USE SQUARE PATTERN OUTSIDE COLUMN. IF SPECIFIED BASE PLATE SIZE DOES NOT PERMIT OUTSIDE PLACEMENT USE SQUARE PATTERN INSIDE COLUMN. USE RECTANGULAR ANCHOR ROD CONFIGURATION WHERE NOTED

1 TYPICAL BASE PLATE DETAIL
NOT TO SCALE

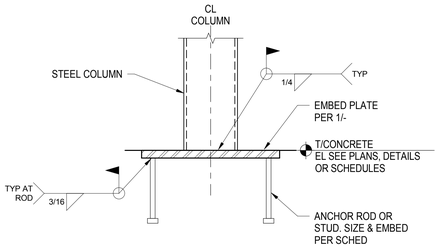

ELEVATION

NOTES:

1. SEE COLUMN SCHEDULE FOR BASE PLATE SIZE, ORIENTATION AND THICKNESS
2. BASE PLATE THICKNESS SHOWN ON SCHEDULE IS A MINIMUM. DIMENSION AFTER ALL MILLING IS COMPLETED
3. COLUMN STABILITY DURING ERECTION IS RESPONSIBILITY OF CONTRACTOR
4. SEE ANCHOR ROD SCHEDULE AND TYPICAL ANCHOR ROD DETAIL FOR ADDITIONAL INFORMATION
5. ANCHOR ROD CONFIGURATION IS TO USE SQUARE PATTERN OUTSIDE COLUMN. IF SPECIFIED BASE LATE SIZE DOES NOT PERMIT OUTSIDE PLACEMENT USE SQUARE PATTERN INSIDE COLUMN. USE RECTANGULAR ANCHOR ROD CONFIGURATION WHERE NOTED

4 TYPICAL SHEAR EMBED PLATE DETAIL
NOT TO SCALE

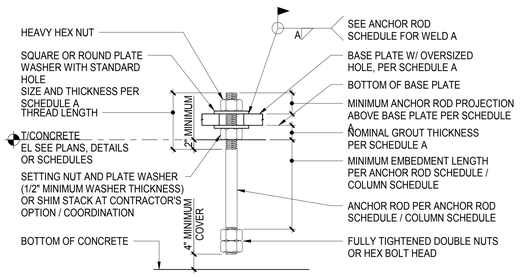

SCHEDULE A

ANCHOR ROD DIAMETER	BASE PL HOLE DIA	MIN WASHER SIZE	MIN WASHER t	MIN PROJ ABOVE BASE PL	NOMINAL GROUT THICKNESS
3/4"	1-5/16"	2"	1/4"	3"	2"
1"	1-13/16"	3"	3/8"	3-1/2"	2"
1-1/4"	2-1/16"	3"	1/2"	4"	3"
1-1/2"	2-5/16"	3-1/2"	1/2"	4"	3"
1-3/4"	2-3/4"	4"	3/4"	5"	3"
2"	3-1/4"	5"	3/4"	5"	4"
2-1/2"	3-3/4"	5-1/2"	1"	5-1/2"	4"

5 TYPICAL ANCHOR ROD DETAIL
NOT TO SCALE

COLUMN SCHEDULE

COLUMN	COLUMN SIZE	BASEPLATE			ANCHOR ROD	
		N	B	tpl	DIAMETER	EMBED
SC1	HSS4X4X3/8	12"	12"	5/8"	3/4"	12"
SC2	HSS6X6X1/4	14"	14"	3/4"	3/4"	12"
SC3	HSS6X0.250	12"	12"	3/4"	3/4"	12"
SC4	HSS8X8X3/8	16"	16"	1"	3/4"	12"

6 STEEL COLUMN SCHEDULE
NOT TO SCALE

AXIS GFA
1130 WESTWOOD BLVD
LOS ANGELES, CA 90024
T 310.209.7520
F 310.209.7516
www.axisgfa.com

PROJECT NAME

Residence Inn® Marriott.

840 KILDARE STREET,
LANCASTER, CA

OWNER:

INSITE REAL STATE
DEVELOPMENT
6265 VARIEL AVENUE
WOODLAND HILLS, CA 91367

Thornton Tomasetti
Thornton Tomasetti, Inc.
707 Wilshire Blvd, Suite 4450
Los Angeles, CA 90017-3618
T 213.330.7000 F 213.330.7001

Project Status

REGISTERED PROFESSIONAL ENGINEER
CHANDAN GANTRU BANERJEE
No. S4416
Exp. 6/30/18
STRUCTURAL
STATE OF CALIFORNIA

NO.	DATE	ISSUES AND REVISIONS	BY
	10.13.17	DESIGN DEVELOPMENT	
	11.20.17	CD PROGRESS SET	
	12.18.17	PLAN CHECK	
	02.16.18	PLAN CHECK	

DATE
SCALE AS NOTED
PROJECT NUMBER
COMPUTER FILE S17081
PROJECT NAME

DESCRIPTION
TYPICAL STEEL DETAILS

SHEET NUMBER
S7.11

ALL DRAWINGS AND WRITTEN MATERIAL APPEARING HEREIN CONSTITUTE ORIGINAL AND UNPUBLISHED WORK OF THE ARCHITECT AND MAY NOT BE DUPLICATED, USED OR DISCLOSED WITHOUT WRITTEN CONSENT OF THE ARCHITECT

1. SEE GENERAL NOTES ON S0.10 AND S0.11 FOR MATERIAL SPECIFICATIONS.
2. STRUCTURAL PROPERTIES OF STEEL DECK SYSTEM SHALL EQUAL OR EXCEED THE PROPERTIES LISTED IN DETAIL 3 ON THIS SHEET.
3. DECK SHALL HAVE A MINIMUM OF 2" BEARING AT ALL SUPPORTING MEMBERS (MEMBERS PERPENDICULAR TO DECK SPAN), AND 1 1/2" AT ALL PARALLEL MEMBERS.
4. DECK WELDING SHALL BE AS NOTED IN DETAIL 3 ON THIS SHEET.
5. PROVIDE BENT PLATE CLOSURE PIECES AT ALL INTERIOR AND EXTERIOR EDGES OF DECK UNLESS OTHERWISE NOTED. SEE DETAILS 5, 6 AND 7 ON THIS SHEET.
6. OPENINGS THROUGH DECKING SHOWN ON FRAMING PLANS ARE NOT COMPLETE AS TO NUMBER, SIZE AND LOCATION. FOR COMPLETE INFORMATION REFER TO DRAWINGS OTHER THAN STRUCTURAL.
7. USE STRENGTHENING AT OPENINGS AS SHOWN IN DETAILS 9, 10, 11 OR 12 (AS APPLICABLE) ON THIS SHEET UNLESS OTHERWISE NOTED. PROVIDE STRENGTHENING BEFORE CUTTING OPENING.
8. DETAILS SHOWN ARE FOR TYPICAL REINFORCING OF DECKS AT OPENINGS. FOR SPECIAL CONDITIONS, SUBMIT LAYOUT OF OPENINGS AND PROPOSED REINFORCING OF DECK FOR REVIEW.
9. MULTIPLE OPENINGS WITH A CLEAR DISTANCE LESS THAN THREE TIMES THE SIZE OF THE LARGER OPENING TO BE TREATED AS A SINGLE GROUP OPENING.
10. IF OPENING IS CUT PRIOR TO FILL PLACEMENT, PROVIDE CLOSURE PIECES AND SHORING AS REQUIRED.
11. FOR SINGLE OPENING THROUGH DECK THAT CUT ONLY ONE WEB AND ARE 4" SQUARE OR 4" DIAMETER MAXIMUM, NO STRENGTHENING IS REQUIRED.
12. SEE MECHANICAL / PLUMBING DRAWINGS FOR DETAILS OF UTILITIES SUSPENDED FROM THE CONCRETE AND STEEL DECK SYSTEM. POINT LOADS TO THE DECK FROM THESE DETAILS SHALL NOT EXCEED 100 LBS PER HANGER. IN ADDITION, LOADS ON HANGERS SHALL BE DISTRIBUTED IN SUCH A MANNER THAT THE TRIBUTARY LOADS FOR EACH HANGER SHALL NOT EXCEED [THE SUPERIMPOSED DEAD LOADS] [5 LBS PER SQ FT].
13. SEE DETAILS 8 THIS SHEET FOR TYPICAL DECK SUPPORT AT COLUMNS.
14. THE FIRST SHEET OF STEEL DECKING ADJACENT & PARALLEL TO PERIMETER WF BEAMS & WF BEAMS WITH MOMENT CONNECTIONS AT EACH END, SHALL BE A FULL WIDTH SHEET.

1 STEEL DECK NOTES
NOT TO SCALE

DECK TYPE	DECK SECTION & GAUGE	t_{DECK}	STEEL DECK ONLY			WELD ATTACHMENT		
			$I(in^4)$	$+S(in^3)$	$-S(in^3)$	PUDDLE WELDS AT SUPPORT MEMBERS	PUDDLE WELDS AT PARALLEL MEMBERS	SIDE LAPS
D1	VERCO PLN 18 GAGE	3"	1.223	0.731	0.776	4 WELDS PER 24" SHEET	12" OC	VSC @ 6" OC

NOTES:
1. PUDDLE WELDS ARE 1/2" EFFECTIVE DIAMETER.
2. DECK DESIGNATIONS ARE VERCO MANUFACTURING CO. ICC ESR-1735P.
3. FOR TYPICAL DECK WELDING DETAILS SEE DETAIL 4 ON THIS SHEET.

3 STEEL DECK SCHEDULE
NOT TO SCALE

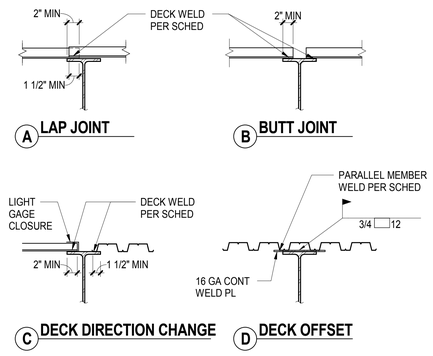

NOTE:
1. SEE STEEL DECK NOTES AND DECK SCHEDULE FOR COMPLETE INFORMATION.

4 TYPICAL DECK JOINT OVER SUPPORT
NOT TO SCALE

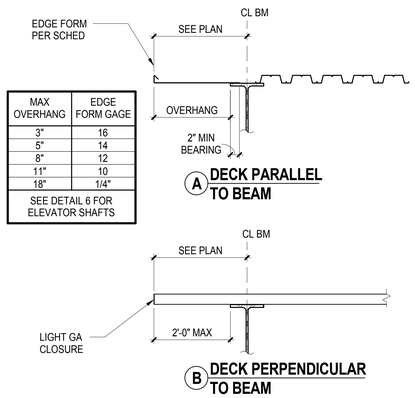

MAX OVERHANG	EDGE FORM GAGE
3"	16
5"	14
8"	12
11"	10
18"	1/4"
SEE DETAIL 6 FOR ELEVATOR SHAFTS	

5 EDGE OF DECK - INTERIOR
NOT TO SCALE

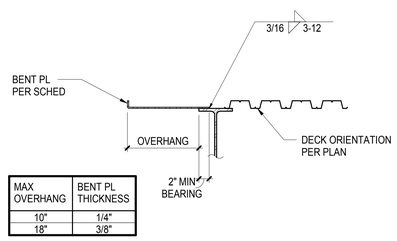

MAX OVERHANG	BENT PL THICKNESS
10"	1/4"
18"	3/8"

6 EDGE OF DECK - EXTERIOR AND ELEVATOR SHAFTS
NOT TO SCALE

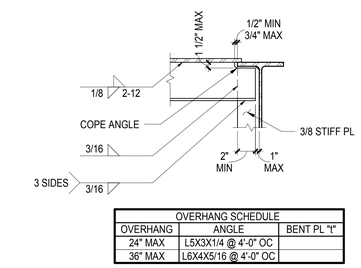

OVERHANG SCHEDULE		
OVERHANG	ANGLE	BENT PL "t"
24" MAX	L5X3X1/4 @ 4'-0" OC	
36" MAX	L6X4X5/16 @ 4'-0" OC	

A OVERHANG SCHEDULE

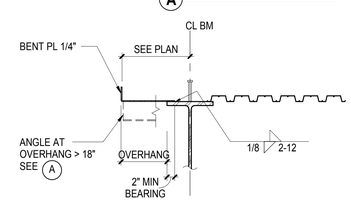

B DECK PARALLEL TO BEAM

7 EDGE OF DECK - LARGE OVERHANG
NOT TO SCALE

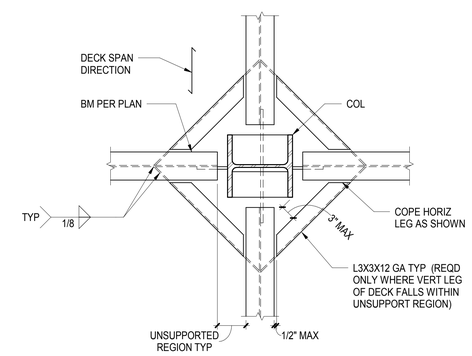

PLAN

8 TYPICAL DECK SUPPORT AT COLUMN
NOT TO SCALE

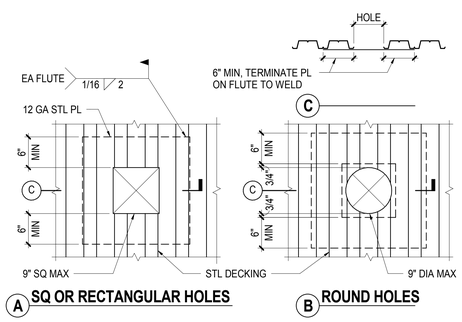

NOTES:
1. PLATE MAY BE LOCATED ABOVE DECK AT CONTRACTOR'S OPTION.

9 SMALL OPENING IN STEEL DECK
NOT TO SCALE

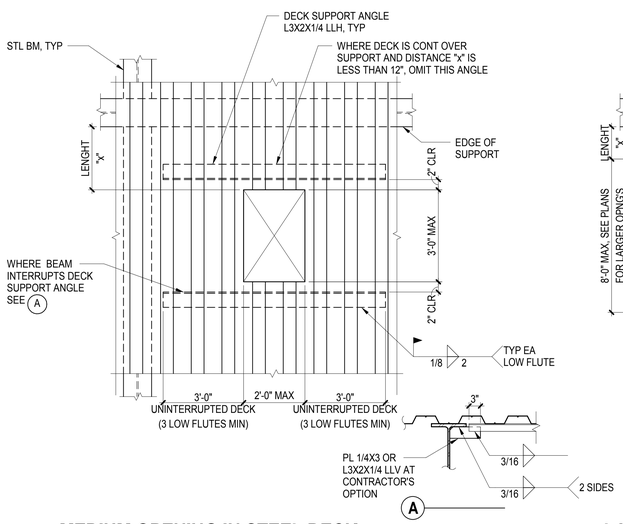

10 MEDIUM OPENING IN STEEL DECK
NOT TO SCALE

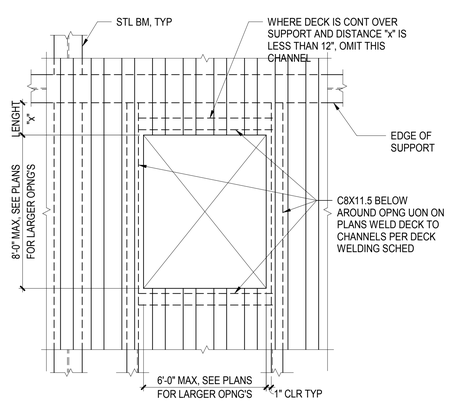

11 LARGE OPENING IN STEEL DECK
NOT TO SCALE

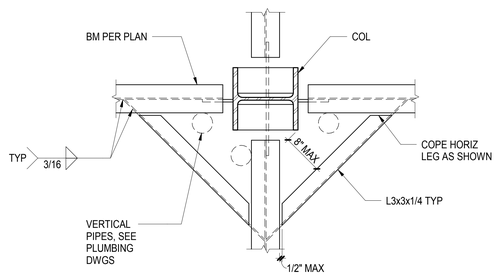

PLAN

12 OPENINGS ADJACENT TO COLUMN
NOT TO SCALE

AXIS GFA
1130 WESTWOOD BLVD
LOS ANGELES, CA 90024
T 310.209.7520
F 310.209.7516
www.axisgfa.com

PROJECT NAME

Residence Inn® Marriott.

840 KILDARE STREET,
LANCASTER, CA

OWNER:

INSITE REAL STATE DEVELOPMENT
6265 VARIEL AVENUE
WOODLAND HILLS, CA 91367

Thornton Tomasetti
Thornton Tomasetti, Inc.
707 Wilshire Blvd, Suite 4450
Los Angeles, CA 90017-3618
T 213.330.7000 F 213.330.7001

Project Status

REGISTERED PROFESSIONAL ENGINEER
CONRADO GANTRIO, JR.
No. S4416
Exp. 6/30/18
STRUCTURAL
STATE OF CALIFORNIA

NO.	DATE	ISSUES AND REVISIONS	BY
	10.13.17	DESIGN DEVELOPMENT	
	11.20.17	CD PROGRESS SET	
	12.18.17	PLAN CHECK	
	02.16.18	PLAN CHECK	

DATE
SCALE AS NOTED
PROJECT NUMBER
COMPUTER FILE S17081
PROJECT NAME

DESCRIPTION
TYPICAL STEEL DECK DETAILS (BARE DECK)

SHEET NUMBER
S7.20

ALL DRAWINGS AND WRITTEN MATERIAL APPEARING HEREIN CONSTITUTE ORIGINAL AND UNPUBLISHED WORK OF THE ARCHITECT AND MAY NOT BE DUPLICATED, USED OR DISCLOSED WITHOUT WRITTEN CONSENT OF THE ARCHITECT

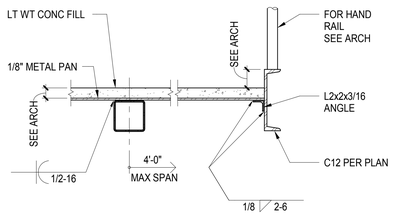

1 LANDING EDGE
1" = 1'-0"

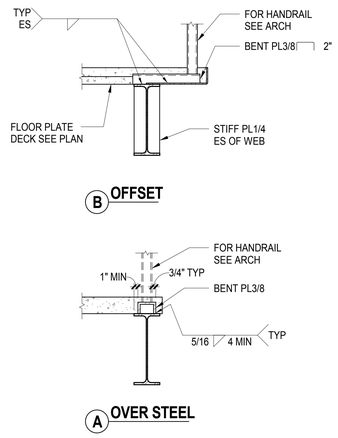

2 FLOOR EDGE
1" = 1'-0"

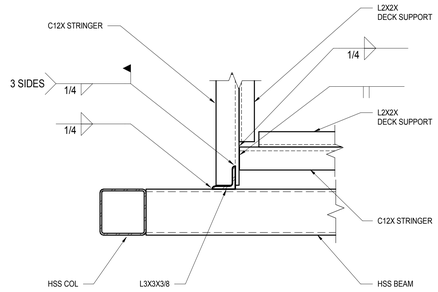

3 PLAN VIEW
1 1/2" = 1'-0"

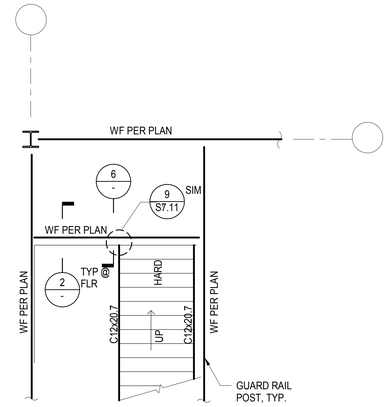

4 STAIR AT TOP FLOOR
1/4" = 1'-0"

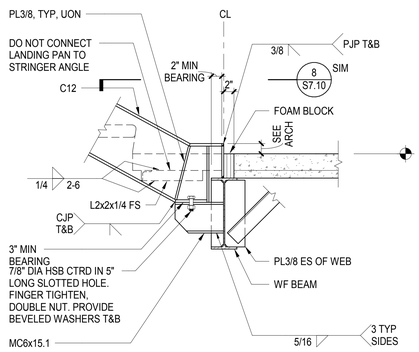

5 STRINGER CONNECTION AT FLOOR SLIP
1" = 1'-0"

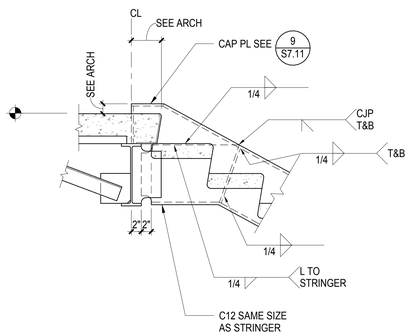

6 STRINGER CONNECTION AT FLOOR RIGID
1 1/2" = 1'-0"

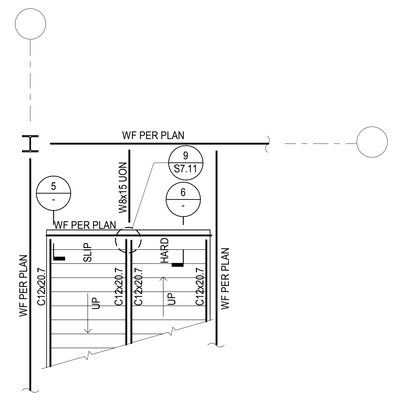

8 STAIR AT FLOOR
1/4" = 1'-0"

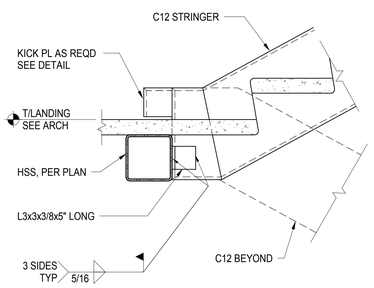

9 STRINGER TO HSS CONNECTION AT LANDING RIDGID
1 1/2" = 1'-0"

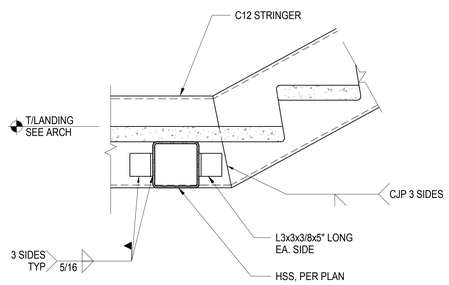

10 STRINGER TO HSS CONNECTION AT LANDING RIGID
1 1/2" = 1'-0"

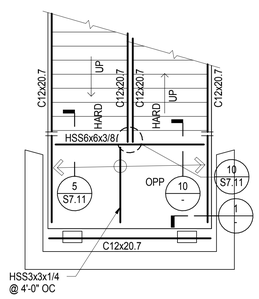

11 STAIR LANDING AT CONCRETE OR CMU WALL
1/4" = 1'-0"

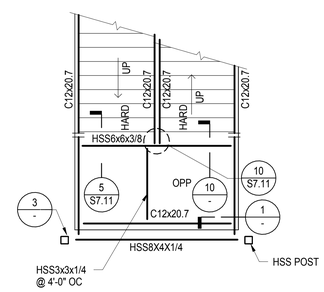

12 STAIR LANDING
1/4" = 1'-0"

AXIS GFA
1130 WESTWOOD BLVD
LOS ANGELES, CA 90024
T 310.209.7520
F 310.209.7516
www.axisgfa.com

PROJECT NAME

Residence Inn® Marriott.

840 KILDARE STREET,
LANCASTER, CA

OWNER:

INSITE REAL STATE DEVELOPMENT
6265 VARIEL AVENUE
WOODLAND HILLS, CA 91367

Thornton Tomasetti
Thornton Tomasetti, Inc.
707 Wilshire Blvd, Suite 4450
Los Angeles, CA 90017-3618
T 213.330.7000 F 213.330.7001

Project Status

REGISTERED PROFESSIONAL ENGINEER STEPHANIE TARNUTZER BUCKLEY No. S44416 Exp. 6/30/18 STRUCTURAL STATE OF CALIFORNIA

NO.	DATE	ISSUES AND REVISIONS	BY
	10.13.17	DESIGN DEVELOPMENT	
	11.20.17	CD PROGRESS SET	
	12.18.17	PLAN CHECK	
	02.16.18	PLAN CHECK	

DATE

SCALE AS NOTED

PROJECT NUMBER

COMPUTER FILE S17081

PROJECT NAME

DESCRIPTION
TYPICAL STAIR DETAILS

SHEET NUMBER
S7.30

ALL DRAWINGS AND WRITTEN MATERIAL APPEARING HEREIN CONSTITUTE ORIGINAL AND UNPUBLISHED WORK OF THE ARCHITECT AND MAY NOT BE DUPLICATED, USED OR DISCLOSED WITHOUT WRITTEN CONSENT OF THE ARCHITECT

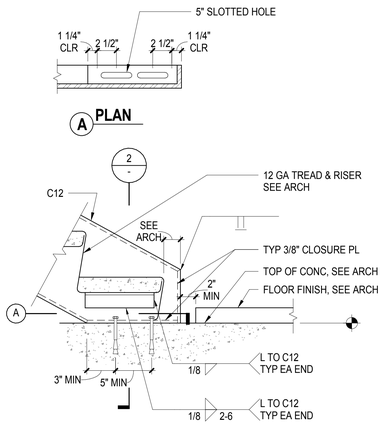

1 STRINGER BASE CONNECTION SLIP
1 1/2" = 1'-0"

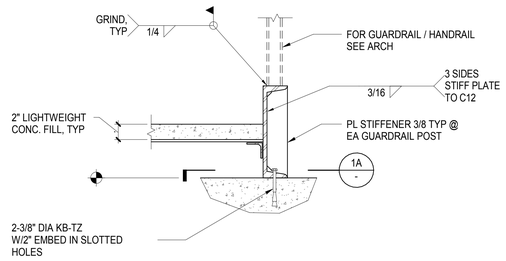

2 STRINGER BASE CONNECTION SLIP
1 1/2" = 1'-0"

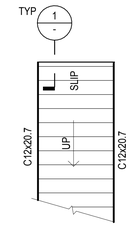

4 STAIR AT GROUND FLOOR
1/4" = 1'-0"

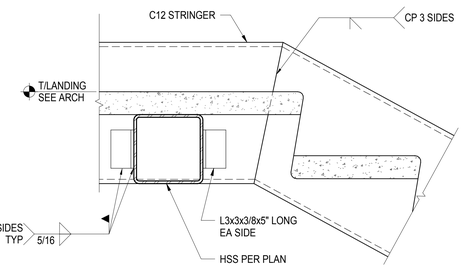

5 EXTERIOR STRINGER TO HSS CONNECTION AT LANDING RIGID
1 1/2" = 1'-0"

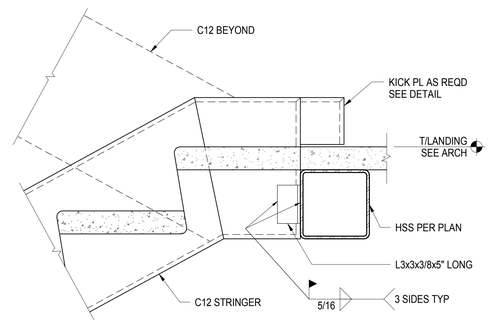

6 STRINGER TO HSS CONNECTION AT LANDING RIGID
1 1/2" = 1'-0"

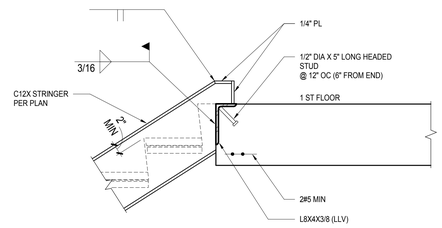

7 SECTION
1" = 1'-0"

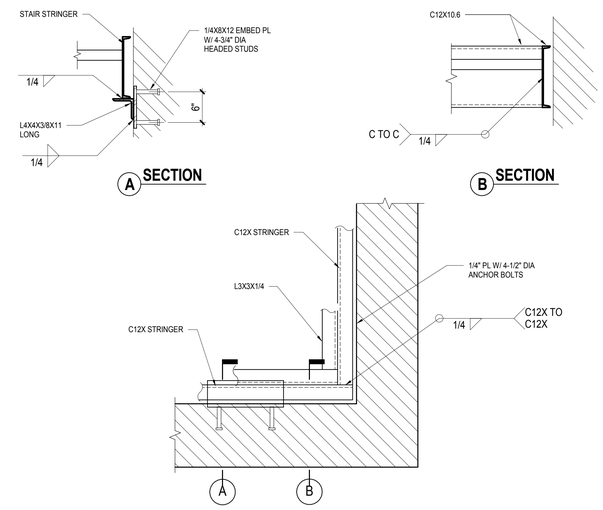

8 SECTION
1" = 1'-0"

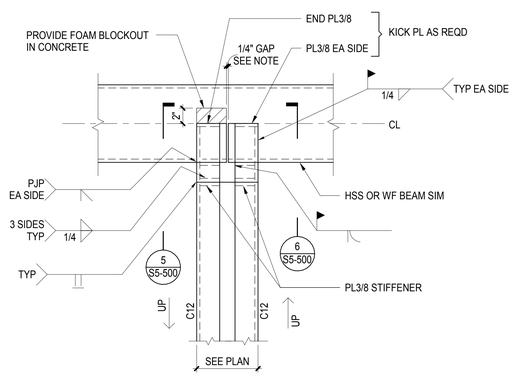

PLAN

NOTE:
PROVIDE BREAK IN HANDRAIL AND KICK PL ABOVE GAP TO ALLOW SLIP

9 STRINGER CONNECTION AT FLOOR SLIP
1 1/2" = 1'-0"

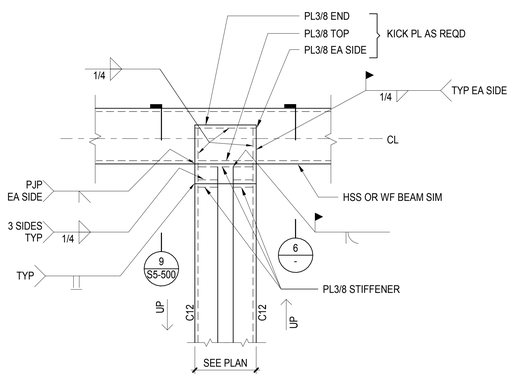

PLAN

10 STRINGER CONNECTION AT LANDING RIDGE
1 1/2" = 1'-0"

AXIS GFA
1130 WESTWOOD BLVD
LOS ANGELES, CA 90024
T 310.209.7520
F 310.209.7516
www.axisgfa.com

PROJECT NAME

Residence Inn® Marriott.

840 KILDARE STREET,
LANCASTER, CA

OWNER:

INSITE REAL STATE DEVELOPMENT
6265 VARIEL AVENUE
WOODLAND HILLS, CA 91367

Thornton Tomasetti
Thornton Tomasetti, Inc.
707 Wilshire Blvd, Suite 4450
Los Angeles, CA 90017-3618
T 213.330.7000 F 213.330.7001

Project Status

REGISTERED PROFESSIONAL ENGINEER
CHARLES QIANTRI HONGAN
No. S4416
Exp. 6/30/18
STRUCTURAL
STATE OF CALIFORNIA

NO.	DATE	ISSUES AND REVISIONS	BY
	10.13.17	DESIGN DEVELOPMENT	
	11.20.17	CD PROGRESS SET	
	12.18.17	PLAN CHECK	
	02.16.18	PLAN CHECK	

DATE

SCALE AS NOTED

PROJECT NUMBER

COMPUTER FILE S17081

PROJECT NAME

DESCRIPTION
TYPICAL STAIR DETAILS

SHEET NUMBER
S7.31

ALL DRAWINGS AND WRITTEN MATERIAL APPEARING HEREIN CONSTITUTE ORIGINAL AND UNPUBLISHED WORK OF THE ARCHITECT AND MAY NOT BE DUPLICATED, USED OR DISCLOSED WITHOUT WRITTEN CONSENT OF THE ARCHITECT

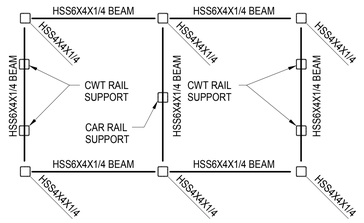

TYPICAL FLOOR

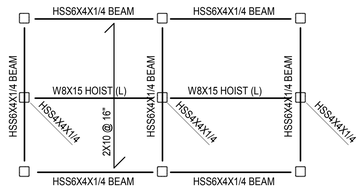

TYPICAL ROOF

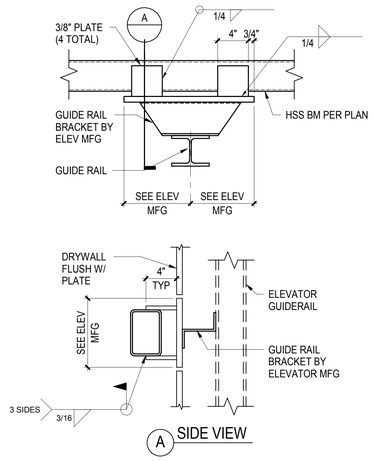

1A SECTION (CONCEPTUAL DETAIL)
1 1/2" = 1'-0"

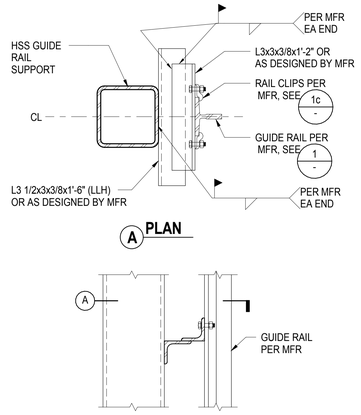

GUIDE RAIL CONN TO HSS SUPPORT (CONCEPTUAL DETAIL)
1B 1 1/2" = 1'-0"

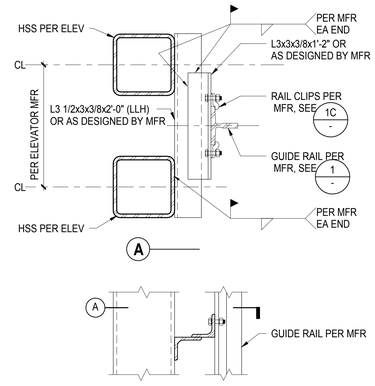

GUIDE RAIL CONN TO HSS SUPPORT (CONCEPTUAL DETAIL)
1C 1 1/2" = 1'-0"

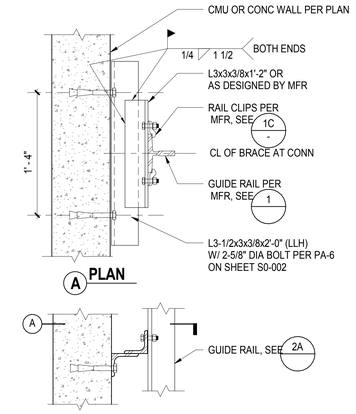

GUIDE RAIL BRACKET CONN TO CONC WALL (CONCEPTUAL DETAIL)
1D 1 1/2" = 1'-0"

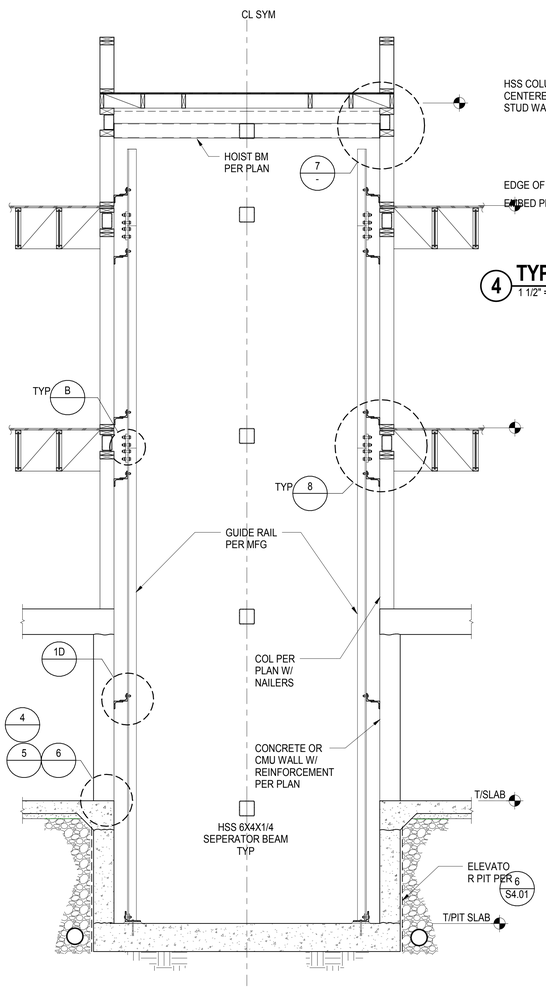

3 ELEVATOR GUIDE RAIL ELEVATION
1/2" = 1'-0"

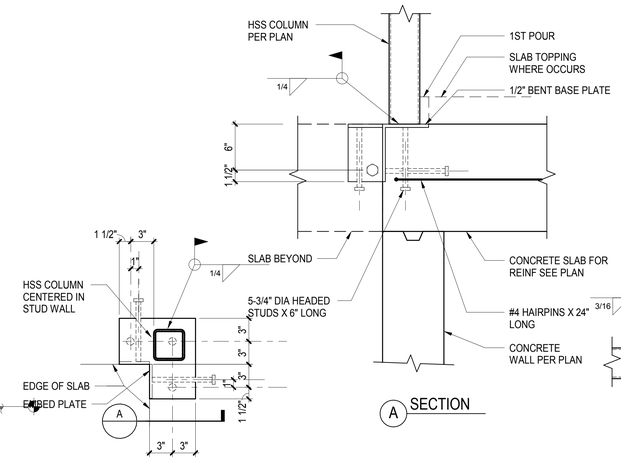

4 TYPICAL ELEVATOR TO SLAB DETAIL
1 1/2" = 1'-0"

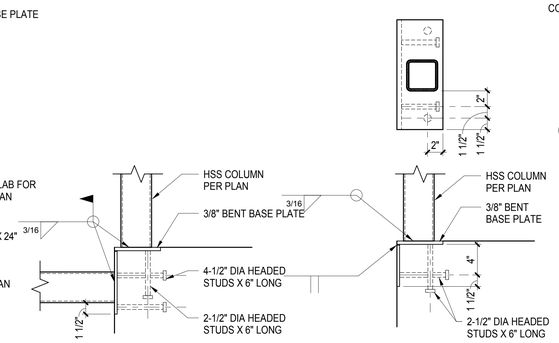

5 SECTIONS (CONCEPTUAL DETAIL)
1 1/2" = 1'-0"

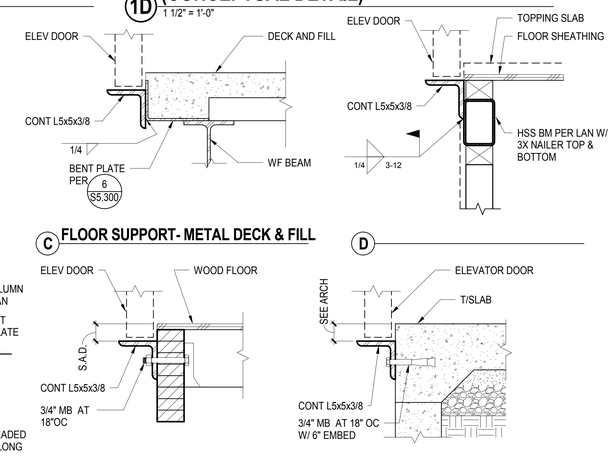

6 ELEVATOR DOOR SUPPORT (CONCEPTUAL DETAIL)
1 1/2" = 1'-0"

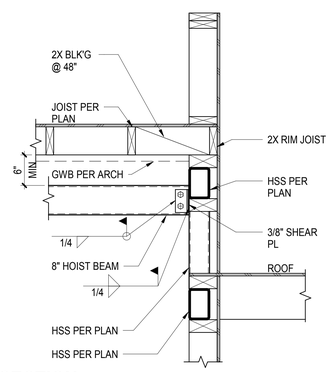

7 SECTION
1" = 1'-0"

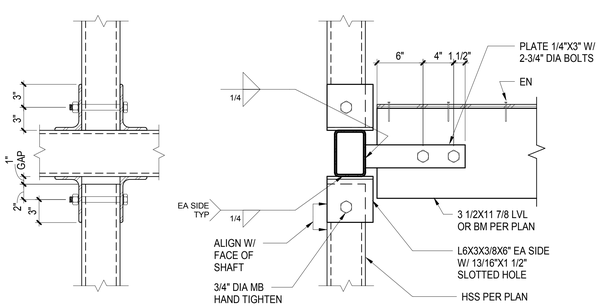

8A SECTION
1 1/2" = 1'-0"

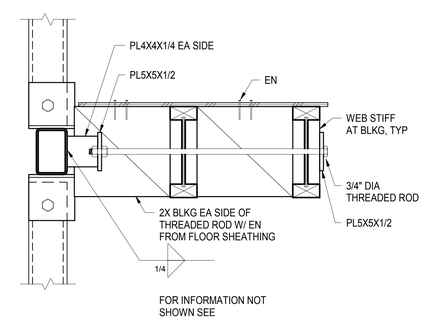

8B SECTION1
1 1/2" = 1'-0"

1. ALL WORKS SHALL CONFORM TO CALIFORNIA CODE OF REGULATIONS LATEST EDITION.
2. ELEVATOR CAB WEIGHT = 2,500 LBS
   CAB CARRYING CAPACITY = 2,500 LBS
3. THE ELEVATOR MANUFACTURER SHALL BE RESPONSIBLE FOR THE DESIGN. FABRICATIONS AND INSTALLATION OF ALL SUPPLEMENTAL FRAMING (GUIDE RAILS, SHEAVE BEAMS, RAIL BRACKET SUPPORTS, RETAINER PLATES. INCLUDING ALL CONNECTIONS AND SPLICES..
4. DETAILS ON THIS SHEET ARE CONCEPTUAL IN NATURE AND ARE FOR BID PURPOSES ONLY. ELEVATOR MANUFACTURER SHALL VERIFY ALL DIMENSIONS AND APPLICABILITY OF DETAILS SHOWN ON THIS SHEET. ELEVATOR MANUFACTURER SHALL RETAIN A STRUCTURAL ENGINEER, LICENSED IN CALIFORNIA TO DESIGN AND DETAIL ALL REQUIRED SUPPLEMENTAL SUPPORT FRAMING AND CONNECTIONS. MANUFACTURER'S STRUCTURAL ENGINEERS SHALL STAMP AND SIGN BOTH CALCULATIONS AND INSTALLTION DRAWINGS. CALCULATIONS AND DETAILS SHALL COMPLY WITH THE LOAD CRITERIA AND DETAILING PROVISION OF THE CALIFORNIA BUILDING CODE WITH DSA/SSS AMENDMENTS. IMPORTANCE FACTOR 1= 1.15.
5. THE ELEVATOR MANUFACTURER SHALL SUBMIT FOR REVIEW BY THE ARCHITECT, PROJECT STRUCTURAL ENGINEER AND THE DIVISION OF THE STATE ARCHITECT, CALCULATIONS, INSTALLATIONS AND FABRICATION DRAWINGS AND MATERIAL SPECIFICATIONS DEMONSTRATING COMPLIANCE WITH CRITERIA STATED ABOVE.
6. ALL BOLT HOLES SHALL NOT BE MORE THAN 1/16" LARGER THAN THE BOLT DIAMETER.

12 ELEVATOR FRAMING NOTES
1 1/2" = 1'-0"

AXIS GFA
1130 WESTWOOD BLVD
LOS ANGELES, CA 90024
T 310.209.7520
F 310.209.7516
www.axisgfa.com

PROJECT NAME

Residence Inn® Marriott.

840 KILDARE STREET,
LANCASTER, CA

OWNER:

INSITE REAL STATE DEVELOPMENT
6265 VARIEL AVENUE
WOODLAND HILLS, CA 91367

Thornton Tomasetti
Thornton Tomasetti, Inc.
707 Wilshire Blvd, Suite 4450
Los Angeles, CA 90017-3618
T 213.330.7000 F 213.330.7001

Project Status

REGISTERED PROFESSIONAL ENGINEER CHARMAIN QUINTRIL BRUNDER No. S4416 Exp. 6/30/18 STRUCTURAL STATE OF CALIFORNIA

NO.	DATE	ISSUES AND REVISIONS	BY
		10.13.17 DESIGN DEVELOPMENT	
		11.20.17 CD PROGRESS SET	
		12.18.17 PLAN CHECK	
		02.16.18 PLAN CHECK	

DATE

SCALE AS NOTED

PROJECT NUMBER

COMPUTER FILE S17081

PROJECT NAME

DESCRIPTION
ELEVATOR DETAILS

SHEET NUMBER
S7.40

ALL DRAWINGS AND WRITTEN MATERIAL APPEARING HEREIN CONSTITUTE ORIGINAL AND UNPUBLISHED WORK OF THE ARCHITECT AND MAY NOT BE DUPLICATED, USED OR DISCLOSED WITHOUT WRITTEN CONSENT OF THE ARCHITECT

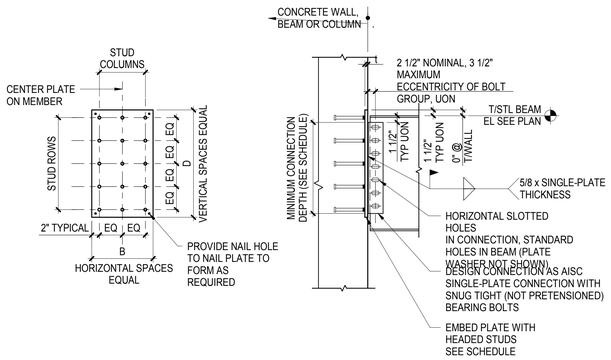

ELEVATION SECTION

1 EMBED PLATE CONNECTION (SHEAR ONLY)
3/4" = 1'-0"

EMBED PLATE SCHEDULE

NOMINAL STEEL BEAM SIZE	MINIMUM CONNECTION DEPTH (IN)	EMBED PLATE SIZE t (in) X B (in) X D (in)	No STUD COLUMNS	No STUD ROWS	REMARKS
W8 -W12	6	3/4 X 10 X 10	2	2	
W12-W18	9	3/4 X 10 X 16	2	3	
W14-W24	12	3/4 X 12 X 22	2	4	
W18-W30	15	3/4 X 12 X 28	2	5	
W21-W36	18	3/4 X 16 X 28	3	5	
W24-W40	21	3/4 X 16 X 28	3	5	
W27-W44	24	3/4 X 16 X 34	3	6	
W30-W44	27	3/4 X 16 X 34	3	6	
W33-W44	30	3/4 X 16 X 40	3	7	
W36-W44	33	3/4 X 16 X 40	3	7	
W40-W44	36	3/4 X 16 X 46	3	8	

NOTES:

1. USE SMALLEST EMBED PLATE SIZE FOR A GIVEN NOMINAL BEAM DEPTH AND WITH A SCHEDULED MAXIMUM SHEAR REACTION EQUAL TO OR GREATER THAN THE SHEAR REACTION REQUIRED ON PLAN
2. CONTRACTOR SHALL DESIGN SINGLE-PLATE GRADE, THICKNESS, BOLT QUANTITY AND TYPE (A325, A490, N OR X) TO RESIST THE SHEAR FORCE SHOWN IN TABLES OR PLANS WHILE SATISFYING GEOMETRIC REQUIREMENTS OF THE TYPICAL EMBED PLATE DETAIL AND SCHEDULE. SEE GENERAL NOTES FOR ADDITIONAL INFORMATION REGARDING THE DESIGN OF STRUCTURAL STEEL CONNECTIONS
3. EMBED PLATES SHALL CONFORM TO ASTM A572, Fy=50 ksi
4. STUDS SHALL BE 3/4" DIAMETER x 8" LONG NOMINAL (MINIMUM)
5. SEE TYPICAL EMBED DETAIL FOR ASSUMED CONNECTION LOCATION RELATIVE TO EMBED PLATE. REPORT ANY AS-BUILT DEVIATION FROM THE ASSUMED CONDITION TO THE SER AS FOLLOWS:
   HORIZONTAL DEVIATION GREATER THAN 2"
   VERTICAL DEVIATION GREATER THAN 1"

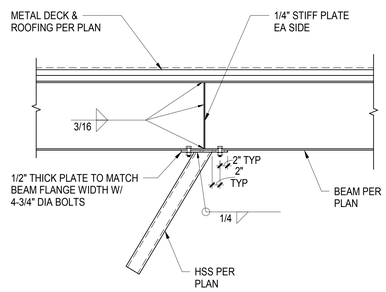

4 SECTION
3/4" = 1'-0"

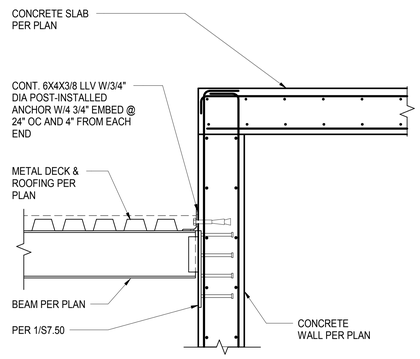

5 SECTION
3/4" = 1'-0"

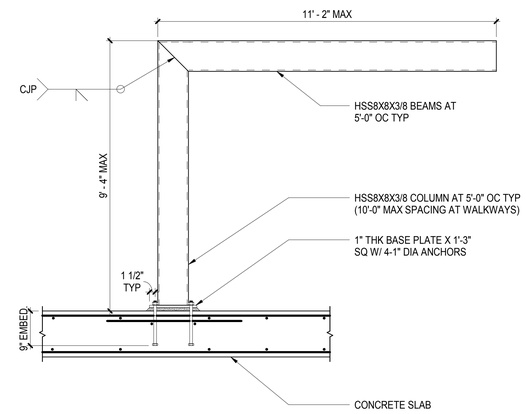

6 SECTION
3/4" = 1'-0"

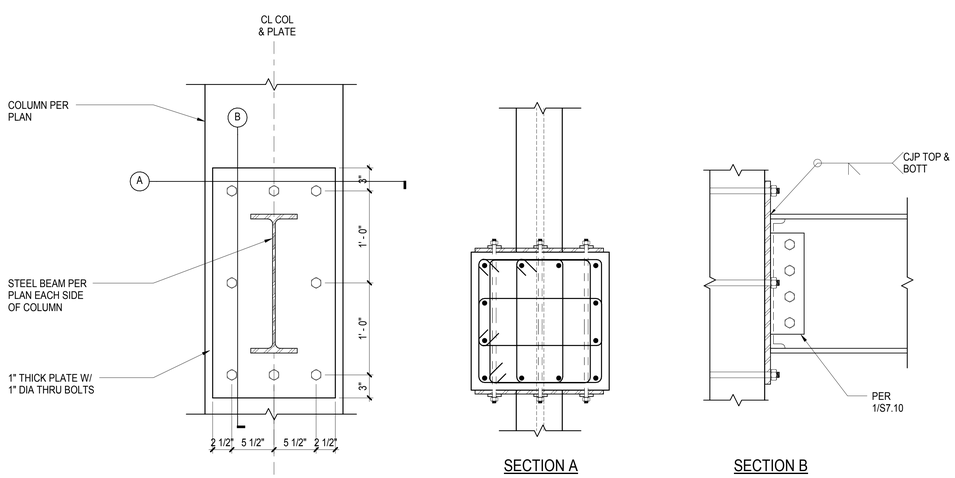

7 SECTION
1 1/2" = 1'-0"

AXIS GFA
1130 WESTWOOD BLVD
LOS ANGELES, CA 90024
T 310.209.7520
F 310.209.7516
www.axisgfa.com

PROJECT NAME

Residence Inn® Marriott.

840 KILDARE STREET,
LANCASTER, CA

OWNER:

INSITE REAL STATE DEVELOPMENT
6265 VARIEL AVENUE
WOODLAND HILLS, CA 91367

Thornton Tomasetti
Thornton Tomasetti, Inc.
707 Wilshire Blvd, Suite 4450
Los Angeles, CA 90017-3618
T 213.330.7000 F 213.330.7001

Project Status

REGISTERED PROFESSIONAL ENGINEER
SUDHAKAR GANJIREDDY, GRADUATE
No. S4416
Exp. 6/30/18
STRUCTURAL
STATE OF CALIFORNIA

NO.	DATE	ISSUES AND REVISIONS	BY
	10.13.17	DESIGN DEVELOPMENT	
	11.20.17	CD PROGRESS SET	
	12.18.17	PLAN CHECK	
	02.16.18	PLAN CHECK	

DATE
SCALE AS NOTED
PROJECT NUMBER
COMPUTER FILE S17081
PROJECT NAME

DESCRIPTION
STEEL DETAILS

SHEET NUMBER
S7.50

ALL DRAWINGS AND WRITTEN MATERIAL APPEARING HEREIN CONSTITUTE ORIGINAL AND UNPUBLISHED WORK OF THE ARCHITECT AND MAY NOT BE DUPLICATED, USED OR DISCLOSED WITHOUT WRITTEN CONSENT OF THE ARCHITECT

	CONNECTION	NAILING [a,m]
1.	Joist to sill or girder, toenail	3-8d
2.	Bridging to joists, toenail each end	2-8d
3.	1" x 6" subfloor or less to each joist, face nail	2-8d
4.	Wider than 1" x 6" subfloor to each joist, face nail	3-8d
5.	2" subfloor to joist or girder, blind and face nail	2-16d
6.	Sole plate to joist or blocking, typical face nail Sole plate to joist or blocking, at braced wall panels	16d at 16" OC 3-16d per 16"
7.	Top plate to stud, end nail	2-16d
8.	Stud to sole plate	4-8d, toenail or 2-16d, end nail[g]
9.	Double studs, face nail	16d at 24"OC
10.	Double top plates, typical face nail	16d at 16"OC UON
11.	Blocking between joists or rafters to top plate, toenail	3-8d
12.	Rim joist to top plate, toenail	8d at 6" OC
13.	Top plates, laps and intersections, face nail	2-16d
14.	Continuous header, two pieces	16d at 16" OC along each side
15.	Ceiling joists to plate, toenail	3-8d
16.	Continuous header to stud, toenail	4-8d
17.	Ceiling joist, laps over partitions, face nail	3-16d[q]
18.	Ceiling joists to parallel rafters, face nail	3-16d[q]
19.	Rafter to plate, toenail	3-8d[r]
20.	1" brace to each stud and plate, face nail	2-8d
21.	1" x 8" sheathing or less to each bearing, face nail	3-8d
22.	Wider than 1" x 8" sheathing to each bearing, face nail	3-8d
23.	Built-up corner studs	16d at 24" OC
24.	Built-up girder and beams	20d at 32" OC face nail at top & bottom & staggered on opposite sides 2-20d face nail at ends
25.	2" planks	16d at each bearing
26.	Collar tie to rafter, face nail	3-10d
27.	Jack rafter to hip, toenail Jack rafter to hip, facenail	3-10d 2-16d
28.	Roof rafter to 2-by ridge beam, toenail Roof rafter to 2-by ridge beam, face nail	2-16d 2-16d
29.	Joist to band joist, face nail	3-16d
30.	Ledger strip, face nail	3-16d each stud
31.	Wood structural panels and particleboard[b] Subfloor, roof and wall sheathing (to framing): 1/2" and less 19/32" - 3/4" 7/8" - 1" 1 1/8" - 1 1/4" Combination subfloor-underlayment (to framing): 3/4" and less 7/8" - 1" 1 1/8" - 1 1/4"	 6d[c] 8d[d] or 6d[e] 8d[e] 10d[d] or 8d[e] 6d[e] 8d[e] 10d[d] or 8d[e]
32.	Panel siding (to framing): 1/2" or less 5/8"	 6d[f] 8d[f]
33.	Fiberboard Sheathing[g] 1/2" 25/32"	 No. 11 ga[h] 6d[d] No. 16 ga[i] No. 11 ga[h] 8d[d] No. 16 ga[i]
34.	Interior paneling 1/4" 3/8"	 4d[j] 6d[k]

FOOTNOTES:

A. USE COMMON WIRE NAILS EXCEPT WHERE OTHERWISE STATED.

B. NAILS SPACED AT 6 INCHES ON CENTER AT EDGES. 12 INCHES AT INTERMEDIATE SUPPORTS EXCEPT 6 INCHES AT ALL SUPPORTS WHERE SPANS ARE 48 INCHES OR MORE. FOR NAILING OF WOOD STRUCTURAL PANEL AND PARTICLEBOARD DIAPHRAGMS AND SHEAR WALLS, REFER TO CBC (IBC) SECTION 2305. NAILS FOR WALL SHEATHING MAY BE COMMON, BOX OR CASING.

C. COMMON OR DEFORMED SHANK. (6d-2", 8d-2 1/2", 10d-3")

D. COMMON. (6d-2", 8d-2 1/2", 10d-3")

E. DEFORMED SHANK. (6d-2", 8d-2 1/2", 10d-3")

F. CORROSION-RESISTANT SIDING OR CASING NAILS CONFORMING TO THE REQUIREMENTS OF SECTION 2304.9.5.

G. FASTENERS SPACED 3 INCHES ON CENTER AT EXTERIOR EDGES AND 6 INCHES ON CENTER AT INTERMEDIATE SUPPORTS, WHEN USED AS STRUCTURAL SHEATHING SPACING SHALL BE 6 INCHES ON CENTER ON THE EDGES AND 12" ON CENTER AT INTERMEDIATE SUPPORTS FOR NON STRUCTURAL APPLICATIONS.

H. CORROSION-RESISTANT ROOFING NAILS WITH 7/16" INCH-DIAMETER HEAD AND 1 1/2"-INCH LENGTH FOR 1/2"-INCH SHEATHING AND 1 3/4"-INCH LENGTH FOR 25/32-INCH SHEATHING CONFORMING TO THE REQUIREMENTS OF SECTION 2304.9.5.

I. CORROSION-RESISTANT STAPLES WITH NOMINAL 7/16-INCH CROWN AND 1-1/8-INCH LENGTH FOR 1/2-INCH SHEATHING AND 1 1/2-INCH LENGTH FOR 25/32-INCH SHEATHING CONFORMING TO THE REQUIREMENTS OF SECTION 2304.9.5.

J. CASING OR FINISH NAILS SPACED 6-INCHES ON PANEL EDGES, 12 INCHES AT INTERMEDIATE SUPPORTS.

K. PANEL SUPPORTS AT 24". CASING OR FINISH NAILS SPACED 6" ON PANEL EDGES, 12" AT INTERMEDIATE SUPPORTS.

L. FOR ROOF SHEATHING APPLICATIONS, 8D NAILS ARE THE MINIMUM REQUIRED FOR WOOD STRUCTURAL PANELS.

M. STAPLES SHALL HAVE A MINIMUM CROWN WIDTH OF 7/16 INCH.

N. FOR ROOF SHEATHING APPLICATIONS, FASTENERS SPACED 4 INCHES ON CENTER AT EDGES, 8 INCHES AT INTERMEDIATE SUPPORTS.

O. FASTENERS SPACED 4 INCHES ON CENTER AT EDGES, 8 INCHES AT INTERMEDIATE SUPPORTS FOR SUBFLOOR AND WALL SHEATHING AND 3 INCHES ON CENTER AT EDGES, 6 INCHES AT INTERMEDIATE SUPPORTS FOR ROOF SHEATHING.

P. FASTENERS SPACED 4 INCHES ON CENTER AT EDGES, 8 INCHES AT INTERMEDIATE SUPPORTS.

Q. FOR ROOF JOISTS AND RAFTERS, MINIMUM NAILING PER CBC (IBC)TABLE 2308.10.4.1.

R. FOR ROOF SLOPES 3:12 OR GREATER IN WHICH CEILING JOISTS SERVE AS A TIE FOR ROOF RAFTERS, MINIMUM NAILING OR HOLDOWN STRAPSMUST BE ADEQUATE TO WITHSTAND MINIMUM WIND UPLIFT PER CBC (IBC) TABLE 2308.10.1.

S. AT 3X SOLE, 2-20D END NAILS SHALL BE USED IN PLACE OF 2-16D END NAILS.

7 TYPICAL NAILING SCHEDULE
NOT TO SCALE

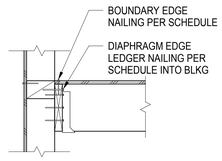

D DIAPHRAGM NAILING AT LEDGER (BALLOON FRAMING)

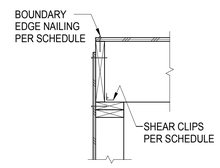

E DIAPHRAGM NAILING AT EXTERIOR (PLATFORM FRAMING)

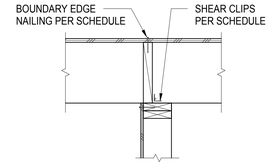

F DIAPHRAGM NAILING AT INTERIOR FRAMING

NOTE:
FOR INFO NOT NOTED ON DETAILS 10D, E AND F, SEE 1/S8-201,1/S8-203, AND 5/S9-101.

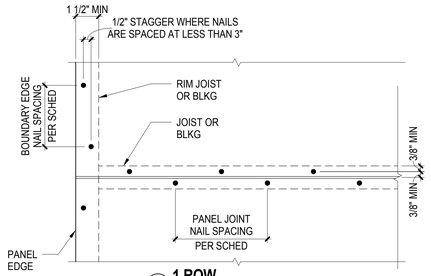

A 1 ROW

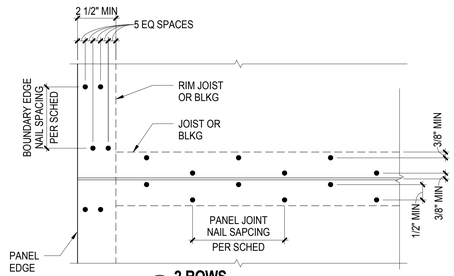

B 2 ROWS

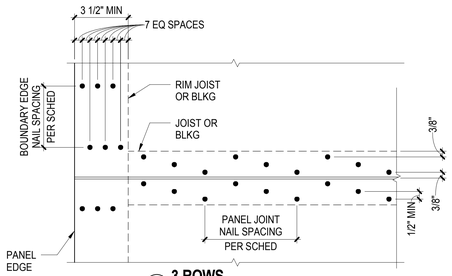

C 3 ROWS

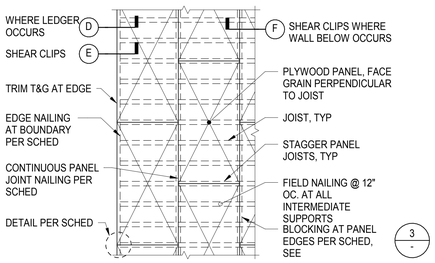

PLYWOOD NAILING SCHEDULE								
MARK	NAIL SIZE	BOUNDARY EDGE NAIL SPACING	CONTINUOUS PANEL JOINT EDGE NAIL SPACING	STAGGERED PANEL JOINT EDGE NAIL SPACING	DETAIL	BLOCKING REQUIRED	DIAPHRAGM EDGE LEDGER NAILING (OR SCREWS AS NOTED)	SHEAR CLIP SPACING 5
1	10d	6"	6"	6"	A	NO (4)	16d @ 8" OC	A35 @ 2'-6" OC
2	10d	4"	4"	6"	A	YES	16d @ 4" OC	A35 @ 1'-6" OC
3	10d	2"	2"	3"	A	YES	16d @ 3" OC	A35 @ 8" OC
4	10d	4"	4"	4"	B	YES	3/8" DIA x 7" LAG SCREWS @ 8" OC	A35 @ 8" OC
5	10d	4"	4"	4"	C	YES	3/8" DIA x 8" LAG SCREWS @ 6" OC	A35 @ 6" OC

NOTES:
1. FOR 8d NAILS, PROVIDE 1 3/8" MINIMUM PENETRATION INTO FRAMING.
   FOR 10d NAILS, PROVIDE 1 1/2" MINIMUM PENETRATION INTO FRAMING.
2. MINIMUM PLYWOOD SHEATHING WIDTH IS 24".
3. SEE GENERAL NOTES FOR PLYWOOD GRADES AND THICKNESS.
4. 1 PSCA/PSCL OR EQUIVALENT AS REQD FOR ALIGNMENT AT ALL PANEL EDGES.
5. SHEAR CLIP SPACING AT SHEAR WALLS PER SHEAR WALL SCHEDULE.WHERE JOISTS ARE PERPENDICULAR TO WALL, CLIPS MAY BE ADJUSTED AS NECESSARY TO AVOID JOIST.

8 TYPICAL DIAPHRAGM NAILING SCHEDULE
NOT TO SCALE

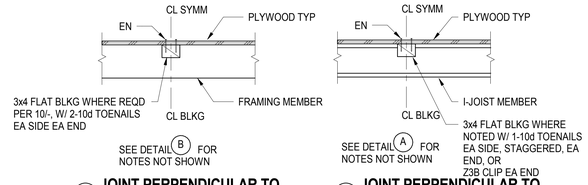

A JOINT PERPENDICULAR TO FRAMING MEMBER

C JOINT PERPENDICULAR TO I-JOIST MEMBER

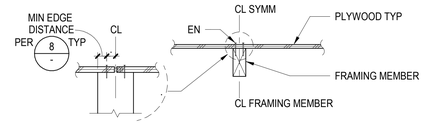

B JOINT PARALLEL TO FRAMING MEMBER

3 TYPICAL DIAPHRAGM PLYWOOD NAILING
NOT TO SCALE

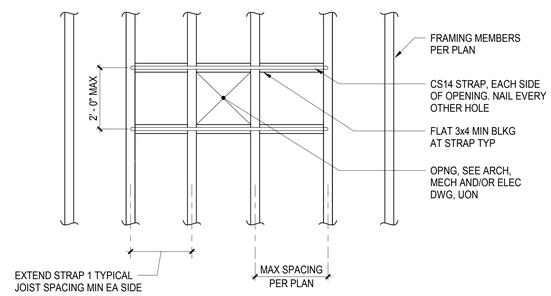

6 TYPICAL SMALL OPENING IN DIAPHRAGM
NOT TO SCALE

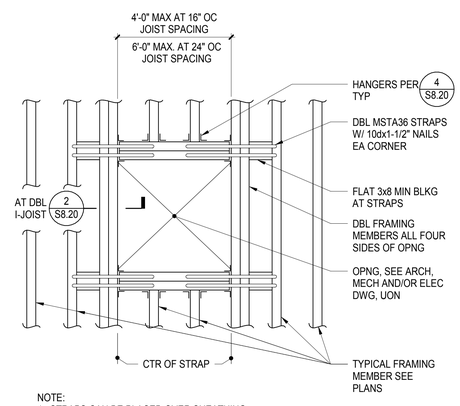

NOTE:
1. STRAPS CAN BE PLACED OVER SHEATHING.
2. FOR OPENINGS NOT SHOWN ON STRUCTURAL PLANS, NOTIFY SEOR.

9 TYPICAL LARGE OPENING IN DIAPHRAGM
NOT TO SCALE

AXIS GFA
1130 WESTWOOD BLVD
LOS ANGELES, CA 90024
T 310.209.7520
F 310.209.7516
www.axisgfa.com

PROJECT NAME

Residence Inn® Marriott.

840 KILDARE STREET,
LANCASTER, CA

OWNER:

INSITE REAL STATE DEVELOPMENT
6265 VARIEL AVENUE
WOODLAND HILLS, CA 91367

Thornton Tomasetti
Thornton Tomasetti, Inc.
707 Wilshire Blvd, Suite 4450
Los Angeles, CA 90017-3618
T 213.330.7000 F 213.330.7001

Project Status

REGISTERED PROFESSIONAL ENGINEER
STEPHEN GANTRY, EMPLOYER
No. S4416
Exp. 6/30/18
STRUCTURAL
STATE OF CALIFORNIA

NO.	DATE	ISSUES AND REVISIONS	BY
	10.13.17	DESIGN DEVELOPMENT	
	11.20.17	CD PROGRESS SET	
	12.18.17	PLAN CHECK	
	02.16.18	PLAN CHECK	

DATE

SCALE AS NOTED

PROJECT NUMBER

COMPUTER FILE S17081

PROJECT NAME

DESCRIPTION
TYPICAL WOOD DETAILS AND SCHEDULES

SHEET NUMBER
S8.00

ALL DRAWINGS AND WRITTEN MATERIAL APPEARING HEREIN CONSTITUTE ORIGINAL AND UNPUBLISHED WORK OF THE ARCHITECT AND MAY NOT BE DUPLICATED, USED OR DISCLOSED WITHOUT WRITTEN CONSENT OF THE ARCHITECT

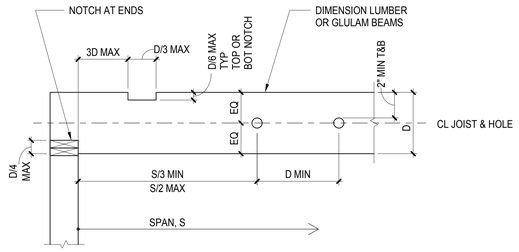

NOTE:

1. NOTCH MAY OCCUR TOP OR BOTTOM, NOT BOTH.
2. D IS DEFINED AS DEPTH OF JOIST OR BEAM. S IS DEFINED AS CLEAR SPAN OF JOIST OR BEAM.
3. MAXIMUM DIAMETER OF HOLE NOT TO EXCEED MINIMUM OF D/3 OR 2", WHICHEVER IS SMALLER.
4. PREDRILL CORNERS OF NOTCHES.
5. NO NOTCHES PERMITTED IN MIDDLE THIRD OF SPAN.

1 WOOD-TYP Beams Holes & Notches
1" = 1'-0"

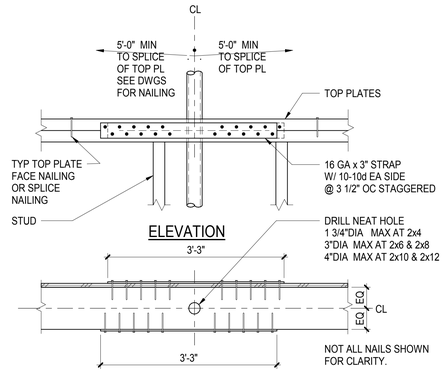

2 WOOD-TYP Plumbing Penetration at Wall
1 1/2" = 1'-0"

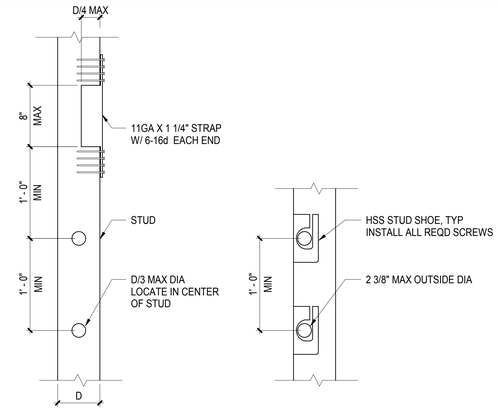

A TYPICAL STUD WALLS

B INTERIOR NON-SHEAR WALLS

NOTES:
1. ALL HOLES ARE TO BE DRILLED
2. PRE-DRILL CORNERS OF NOTCHES

3 WOOD-TYP Penetrations Through Wall Studs
1 1/2" = 1'-0"

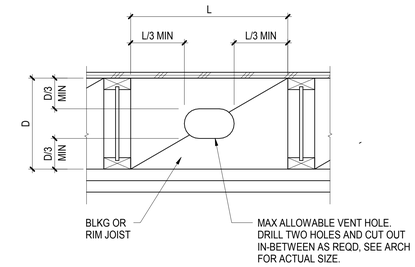

4 WOOD-TYP Holes in Blkg
1 1/2" = 1'-0"

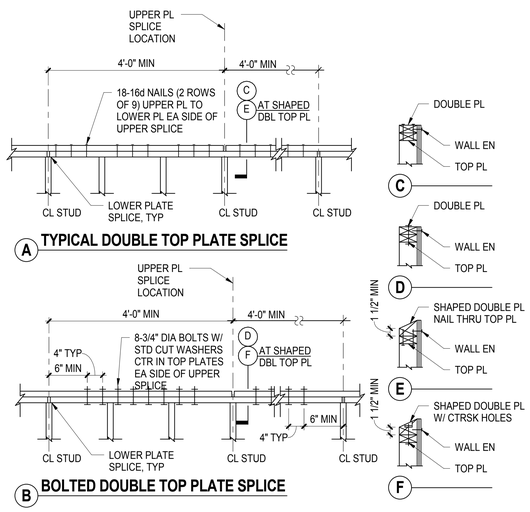

A TYPICAL DOUBLE TOP PLATE SPLICE

B BOLTED DOUBLE TOP PLATE SPLICE

5 WOOD-TYP Double Top Plate Splice
12" = 1'-0"

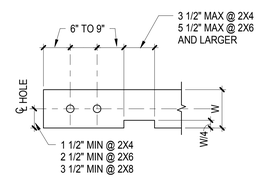

SILL PLATE PLAN VIEW

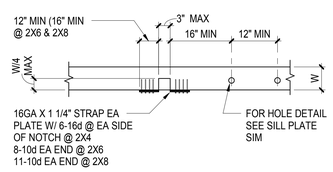

TOP PLATE PLAN VIEW

6 6/S8.01
3/4" = 1'-0"

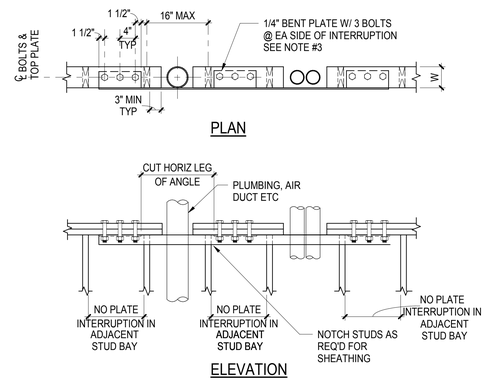

NOTES:

1. NO TOP OR SILL PLATE SPLICE TO OCCR WITHIN 6'-0" OF INTERRUPTION
2. DETAIL APPLIES WHERE DRILLED HOLE EXCEEDS W/3, NOTCH EXCEEDS W/3, NOTCH EXCEEDS W/4 OR TOP PLATE IS INTERRUPTED
3. AT 2X4 TOP PLATE USE 3/4" DIA BOLTS AT 2X6 TOP PLATE USE 1" DIA BOLTS

7 7/S8.01
3/4" = 1'-0"

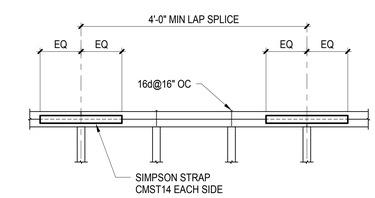

8 TOP PLATE SPLICE ALTERNATE
1" = 1'-0"

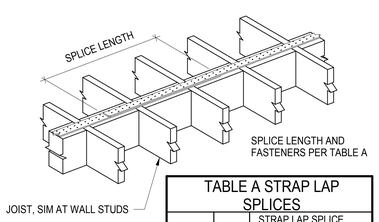

TABLE A STRAP LAP SPLICES			
MODEL No.	GAGE	STRAP LAP SPLICE	
		MINIMUM FASTENERS PER SPLICE	MINIMUM SPLICE LENGTH
CMST12	12	25-16d	22"
		30-10d	27"
CMST14	14	18-16d	16"
		21-10d	19"
CMSTC16	16	13-16d	11"
		15-10d	12"

NOTES:
1. NO STRAP MODIFICATION IS ALLOWED AND SPLICE MUST MEET BOTH MINIMUM NUMBER OF FASTENERS AND THE MINIMUM SPLICE LENGTH.
2. ALTERNATE PER DETAIL 2/S8-002 MAY BE USED AT CONTRACTOR'S OPTION.

9 STRAP SPLICE
1" = 1'-0"

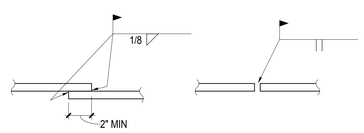

A LAP

B BUTT

NOTE:
EITHER DETAIL A OR B MAY BE USED IN LIEU OF 1/-.
COORDINATE ARCHITECTURAL FINISH REQUIREMENTS.

10 STRAP SPLICE - ALTERNATE
1 1/2" = 1'-0"

AXIS GFA
1130 WESTWOOD BLVD
LOS ANGELES, CA 90024
T 310.209.7520
F 310.209.7516
www.axisgfa.com

PROJECT NAME

Residence Inn® Marriott®

840 KILDARE STREET,
LANCASTER, CA

OWNER:

INSITE REAL STATE DEVELOPMENT
6265 VARIEL AVENUE
WOODLAND HILLS, CA 91367

Thornton Tomasetti
Thornton Tomasetti, Inc.
707 Wilshire Blvd, Suite 4450
Los Angeles, CA 90017-3618
T 213.330.7000 F 213.330.7001

Project Status

REGISTERED PROFESSIONAL ENGINEER CHARLES DANIEL BRADER No. S4416 Exp. 6/30/18 STRUCTURAL STATE OF CALIFORNIA

NO.	DATE	ISSUES AND REVISIONS	BY
	10.13.17	DESIGN DEVELOPMENT	
	11.20.17	CD PROGRESS SET	
	12.18.17	PLAN CHECK	
	02.16.18	PLAN CHECK	

DATE

SCALE AS NOTED

PROJECT NUMBER

COMPUTER FILE S17081

PROJECT NAME

DESCRIPTION
TYPICAL WOOD DETAILS

SHEET NUMBER
S8.01

ALL DRAWINGS AND WRITTEN MATERIAL APPEARING HEREIN CONSTITUTE ORIGINAL AND UNPUBLISHED WORK OF THE ARCHITECT AND MAY NOT BE DUPLICATED, USED OR DISCLOSED WITHOUT WRITTEN CONSENT OF THE ARCHITECT

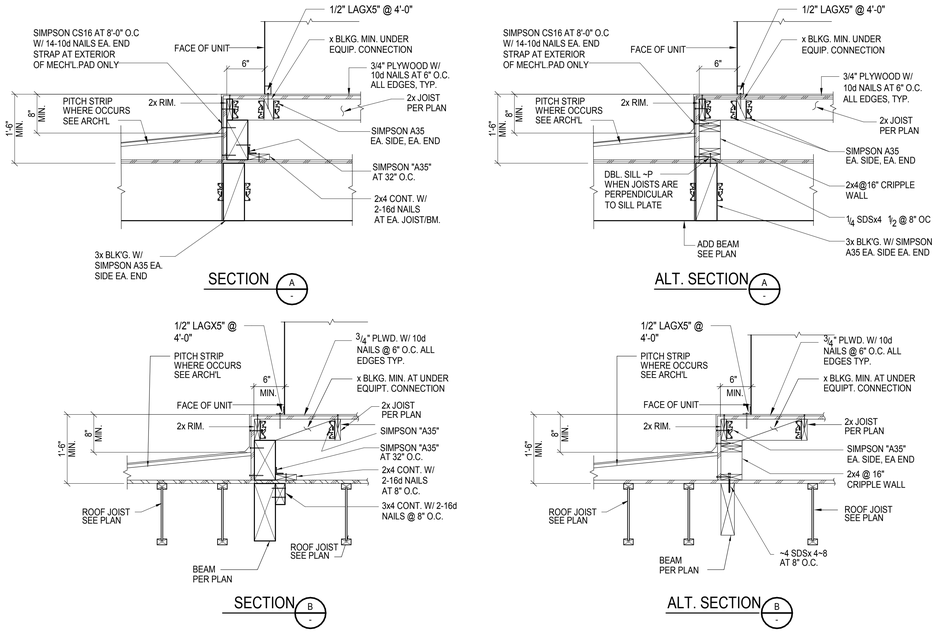

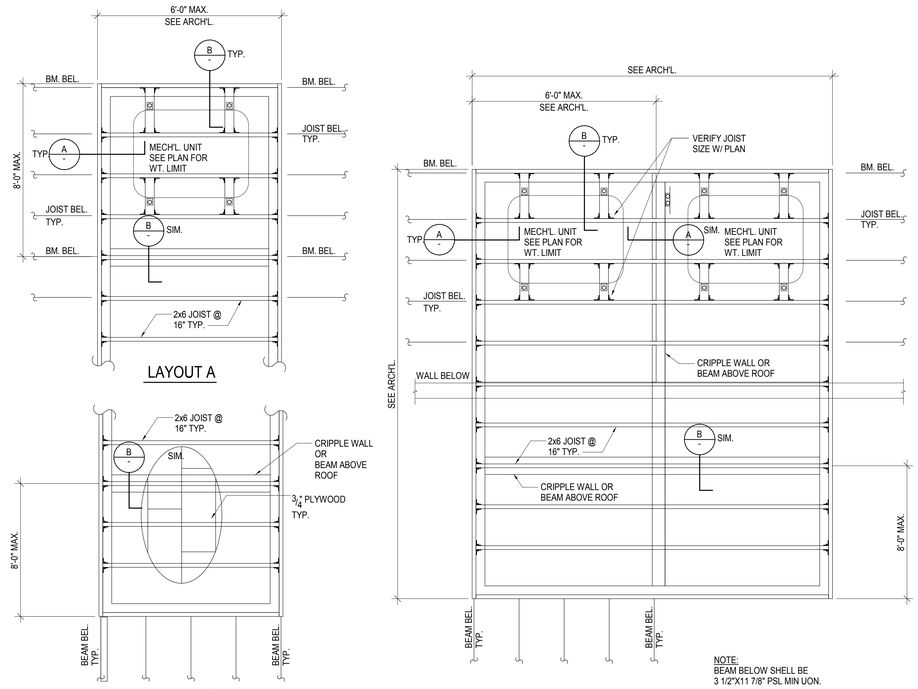

1 TYPICAL ROOF EQUIPMENT PLATFORM

NOT TO SCALE

AXIS GFA

1130 WESTWOOD BLVD
LOS ANGELES, CA 90024
T 310.209.7520
F 310.209.7516
www.axisgfa.com

PROJECT NAME

Residence Inn® Marriott.

840 KILDARE STREET,
LANCASTER, CA

OWNER:

INSITE REAL STATE DEVELOPMENT
6265 VARIEL AVENUE
WOODLAND HILLS, CA 91367

Thornton Tomasetti
Thornton Tomasetti, Inc.
707 Wilshire Blvd, Suite 4450
Los Angeles, CA 90017-3618
T 213.330.7000 F 213.330.7001

Project Status

REGISTERED PROFESSIONAL ENGINEER
CHANDAN GANTRU DRAKER
No. S4416
Exp. 6/30/18
STRUCTURAL
STATE OF CALIFORNIA

NO.	DATE	ISSUES AND REVISIONS	BY
	10.13.17	DESIGN DEVELOPMENT	
	11.20.17	CD PROGRESS SET	
	12.18.17	PLAN CHECK	
	02.16.18	PLAN CHECK	

DATE

SCALE AS NOTED

PROJECT NUMBER

COMPUTER FILE **S17081**

PROJECT NAME

DESCRIPTION
TYPICAL WOOD DETAILS

SHEET NUMBER
S8.02

ALL DRAWINGS AND WRITTEN MATERIAL APPEARING HEREIN CONSTITUTE ORIGINAL AND UNPUBLISHED WORK OF THE ARCHITECT AND MAY NOT BE DUPLICATED, USED OR DISCLOSED WITHOUT WRITTEN CONSENT OF THE ARCHITECT

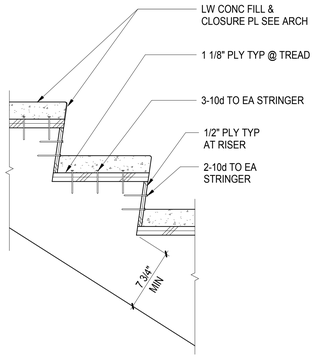

1 TYPICAL STAIR CONSTRUCTION
NOT TO SCALE

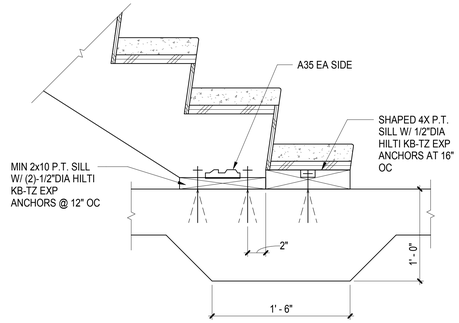

2 TYPICAL STRINGER TO SLAB
NOT TO SCALE

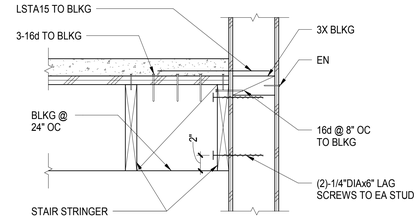

3 TYPICAL STRINGER TO PARALLEL WALL
NOT TO SCALE

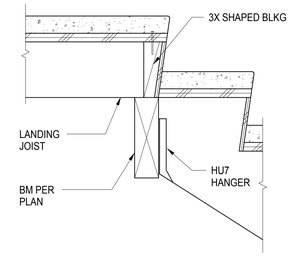

4 TYPICAL STRINGER TO LANDING
NOT TO SCALE

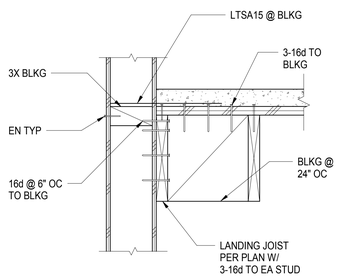

5 TYPICAL LANDING TO PARALLEL WALL
NOT TO SCALE

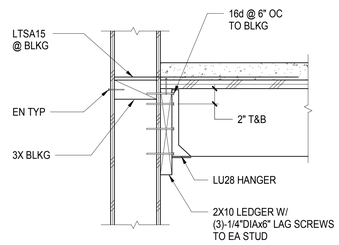

6 TYPICAL LANDING TO PERPENDICULAR WALL
NOT TO SCALE

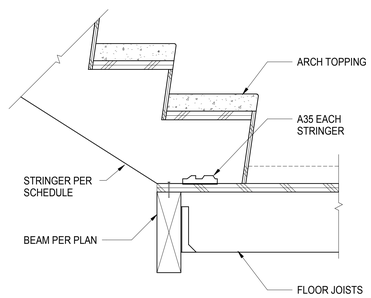

7 TYPICAL STRINGER TO LANDING
NOT TO SCALE

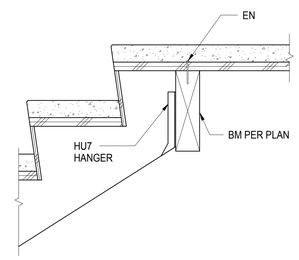

8 TYPICAL STRINGER TO FLOOR
NOT TO SCALE

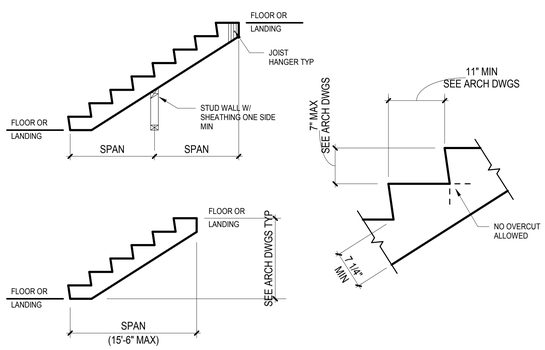

STAIR STRINGER SCHEDULE		
SPAN	STRINGER SIZE	SPACING
0 TO 7'-9"	2x14	16"
7'-9" TO 9'-0"	2x14	12"
9'-0" TO 11'-0"	2-2x14	16"
11'-0" TO 13'-0"	2-2x14	12"
13'-0" TO 15'-6"	3-2x14	8"

NOTES:

1. FOR STAIR STRINGER SPAN SEE ARCH DWGS
2. SEE ARCH DWGS FOR TREAD CONSTRUCTION
3. NAIL DOUBLE 2X14 W/ 16d NAILS @ 9" OC STAGG

9 TYPICAL STAIR STRINGER SPAN DETAIL
1" = 1'-0"

AXIS GFA

1130 WESTWOOD BLVD
LOS ANGELES, CA 90024
T 310.209.7520
F 310.209.7516
www.axisgfa.com

PROJECT NAME

Residence Inn® Marriott.

840 KILDARE STREET,
LANCASTER, CA

OWNER:

INSITE REAL STATE
DEVELOPMENT
6265 VARIEL AVENUE
WOODLAND HILLS, CA 91367

Thornton Tomasetti
Thornton Tomasetti, Inc.
707 Wilshire Blvd, Suite 4450
Los Angeles, CA 90017-3618
T 213.330.7000 F 213.330.7001

Project Status

REGISTERED PROFESSIONAL ENGINEER
CHRISTOPHER GANTRU TAYLOR
No. S4416
Exp. 6/30/18
STRUCTURAL
STATE OF CALIFORNIA

NO.	DATE	ISSUES AND REVISIONS	BY
	10.13.17	DESIGN DEVELOPMENT	
	11.20.17	CD PROGRESS SET	
	12.18.17	PLAN CHECK	
	02.16.18	PLAN CHECK	

DATE

SCALE AS NOTED

PROJECT NUMBER

COMPUTER FILE **S17081**

PROJECT NAME

DESCRIPTION
TYPICAL STAIR DETAILS

SHEET NUMBER
S8.03

ALL DRAWINGS AND WRITTEN MATERIAL APPEARING HEREIN CONSTITUTE ORIGINAL AND UNPUBLISHED WORK OF THE ARCHITECT AND MAY NOT BE DUPLICATED, USED OR DISCLOSED WITHOUT WRITTEN CONSENT OF THE ARCHITECT

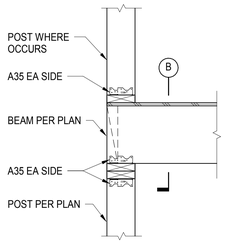

A AT FLUSH BEAM

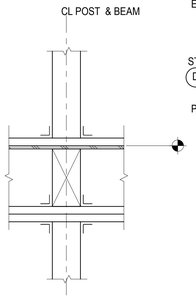

B SECTION

NOTE:
INTERRUPTED TOP PLATES NOT SHOWN FOR CLARITY

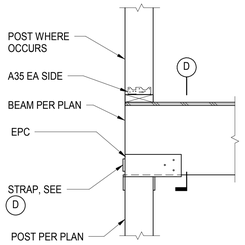

C AT BEAM DEEPER THAN JOISTS

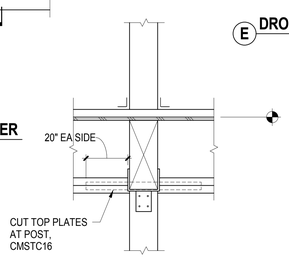

D SECTION

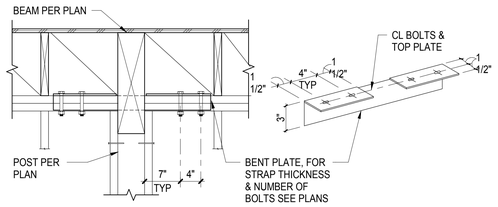

E DROP BEAM

1 TYPICAL BEAM AND POST CONNECTION
NOT TO SCALE

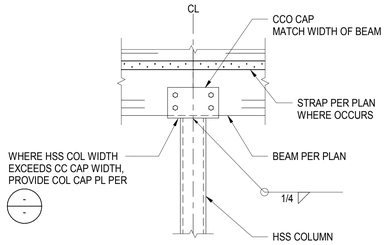

3 TYPICAL BEAM TO HSS COLUMN CONNECTION2
NOT TO SCALE

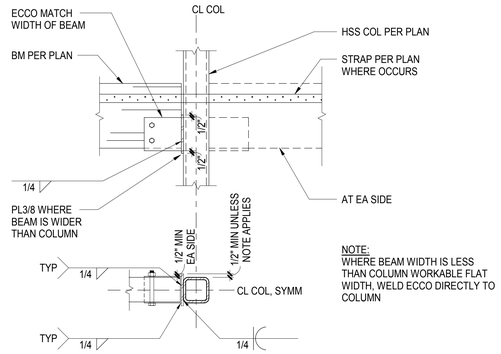

4 TYPICAL BEAM TO HSS COLUMN CONNECTION
NOT TO SCALE

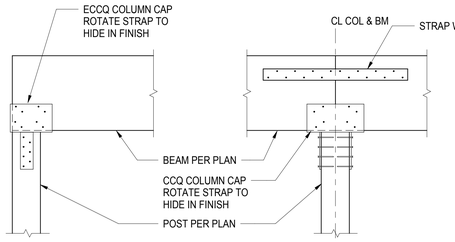

A POST CAP AT END OF BEAM

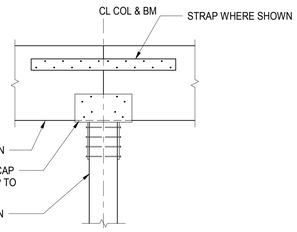

B POST CAP

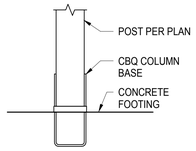

C POST BASE

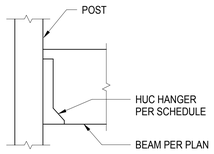

D BEAM TO POST CONNECTION

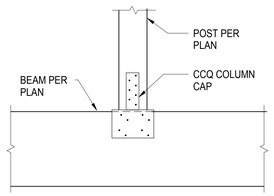

E POST BASE

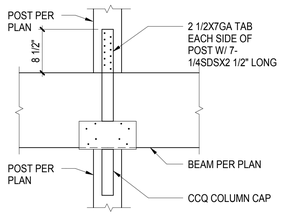

F POST BASE

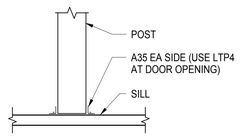

G POST BASE

5 TYPICAL BEAM AND POST CONNECTION
NOT TO SCALE

AXIS GFA
1130 WESTWOOD BLVD
LOS ANGELES, CA 90024
T 310.209.7520
F 310.209.7516
www.axisgfa.com

PROJECT NAME

Residence Inn® Marriott.

840 KILDARE STREET,
LANCASTER, CA

OWNER:

INSITE REAL STATE DEVELOPMENT
6265 VARIEL AVENUE
WOODLAND HILLS, CA 91367

Thornton Tomasetti
Thornton Tomasetti, Inc.
707 Wilshire Blvd, Suite 4450
Los Angeles, CA 90017-3618
T 213.330.7000 F 213.330.7001

Project Status

REGISTERED PROFESSIONAL ENGINEER
CHARANJIT GANTRA
No. S4416
Exp. 6/30/18
STRUCTURAL
STATE OF CALIFORNIA

NO.	DATE	ISSUES AND REVISIONS	BY
		10.13.17 DESIGN DEVELOPMENT	
		11.20.17 CD PROGRESS SET	
		12.18.17 PLAN CHECK	
		02.16.18 PLAN CHECK	

DATE

SCALE AS NOTED

PROJECT NUMBER

COMPUTER FILE S17081

PROJECT NAME

DESCRIPTION
TYPICAL WOOD CONNECTIONS

SHEET NUMBER
S8.10

ALL DRAWINGS AND WRITTEN MATERIAL APPEARING HEREIN CONSTITUTE ORIGINAL AND UNPUBLISHED WORK OF THE ARCHITECT AND MAY NOT BE DUPLICATED, USED OR DISCLOSED WITHOUT WRITTEN CONSENT OF THE ARCHITECT

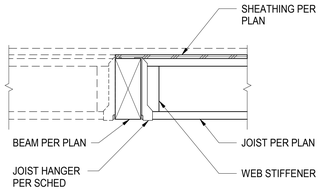

1 TYPICAL JOIST TO WOOD BEAM CONNECTION
NOT TO SCALE

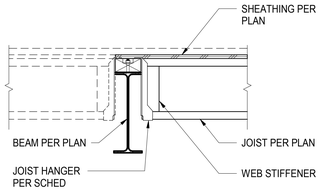

2 TYPICAL JOIST TO STEEL BEAM CONNECTION
NOT TO SCALE

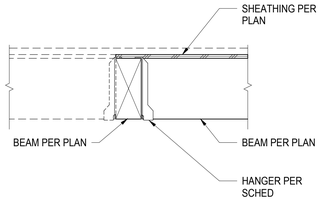

3 TYPICAL WOOD BEAM TO WOOD GIRDER (W/ HANGER)
NOT TO SCALE

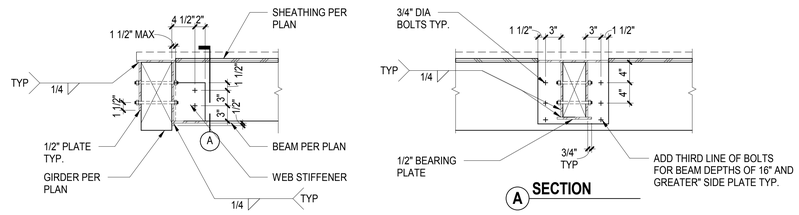

4 TYPICAL WOOD BEAM TO WOOD GIRDER
NOT TO SCALE

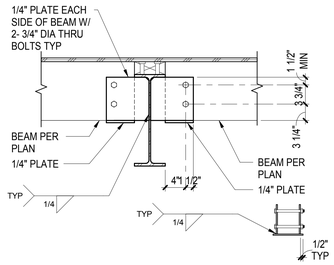

5 TYPICAL WOOD BEAM TO STEEL GIRDER
1" = 1'-0"

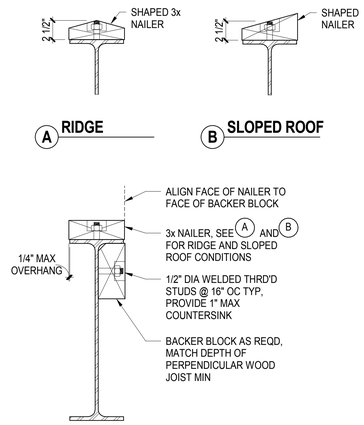

6 TYPICAL NAILER AND BACKER BLOCK
1 1/2" = 1'-0"

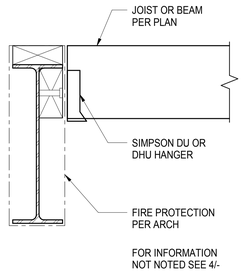

7 TYPICAL JOIST SUPPORT AT FIRE PROTECTED BEAM
1 1/2" = 1'-0"

AXIS GFA
1130 WESTWOOD BLVD
LOS ANGELES, CA 90024
T 310.209.7520
F 310.209.7516
www.axisgfa.com

PROJECT NAME

Residence Inn® Marriott.

840 KILDARE STREET,
LANCASTER, CA

OWNER:

INSITE REAL STATE DEVELOPMENT
6265 VARIEL AVENUE
WOODLAND HILLS, CA 91367

Thornton Tomasetti
Thornton Tomasetti, Inc.
707 Wilshire Blvd, Suite 4450
Los Angeles, CA 90017-3618
T 213.330.7000 F 213.330.7001

Project Status

REGISTERED PROFESSIONAL ENGINEER
FLORIAN GANTNER, EDWARD
No. S4416
Exp. 6/30/18
STRUCTURAL
STATE OF CALIFORNIA

NO.	DATE	ISSUES AND REVISIONS	BY
	10.13.17	DESIGN DEVELOPMENT	
	11.20.17	CD PROGRESS SET	
	12.18.17	PLAN CHECK	
	02.16.18	PLAN CHECK	

DATE

SCALE AS NOTED

PROJECT NUMBER

COMPUTER FILE S17081

PROJECT NAME

DESCRIPTION
TYPICAL WOOD CONNECTIONS

SHEET NUMBER
S8.11

ALL DRAWINGS AND WRITTEN MATERIAL APPEARING HEREIN CONSTITUTE ORIGINAL AND UNPUBLISHED WORK OF THE ARCHITECT AND MAY NOT BE DUPLICATED, USED OR DISCLOSED WITHOUT WRITTEN CONSENT OF THE ARCHITECT

NOTES :

A. INFORMATION PROVIDED IS FOR TJI WOOD I-JOIST MANUFACTURED BY WEYERHAEUSER. SEE MANUFACTURER'S REQUIREMENTS FOR JOISTS BY OTHER MANUFACTURERS. FABRICATION, AND TESTING SHALL COMPLY WITH ASTM D5055-04, "SPECIFICATION FOR ESTABLISHING AND MONITORING STRUCTURAL CAPACITIES OF PREFABRICATED WOOD I-JOISTS."

B. PRIOR TO FABRICATION OF I-JOISTS, THE FOLLOWING MATERIAL BEARING THE APPROVAL OF THE THE MANUFACTURER'S ENGINEER MUST BE SUBMITTED TO THE ARCHITECT FOR REVIEW:

1. SHOP DRAWINGS CLEARLY DELINEATING LAYOUT, BRIDGING REQUIREMENTS, JOIST MEMBER SIZES (INCLUDING GRADE AND SPECIES OF LUMBER USED), ELEVATION OF TAPERED JOISTS (IF ANY), WEB OPENINGS, CONNECTION DETAILS, AND BEARING DETAILS.

C. WOOD I-JOISTS SHALL BE DESIGNED IN ACCORDANCE WITH THE CODE AS DEFINED IN SECTION CD-1 OF THE GENERAL NOTES.

D. WOOD I-JOISTS SHALL BE DESIGNED TO WITHSTAND THE DEAD LOADS, LIVE LOADS AND ROOF WIND UPLIFT LOADS INDICATED IN THE GENERAL NOTES AND LOAD MAPS. ALL JOISTS SHALL BE DESIGNED TO WITHSTAND A 200 LBS CONCENTRATED DEAD LOAD ACTING AT ANY LOCATION ALONG THE SPAN OF THE JOIST ACTING SIMULTANEOUSLY WITH THE DESIGN LOADS. ANY ADDITIONAL LOAD REQUIREMENTS ARE INDICATED ON THE PLANS AND/OR DETAILS.

E. CONTRACTOR SHALL INSTALL ERECTION BRACING PER JOIST MANUFACTURER'S REQUIREMENTS.

F. PROVIDE ALL BLOCKING, STIFFENERS, LATERAL AND DIAGONAL BRACING, CLIPS, AND ANCHORS AS DETAILED IN THESE DRAWINGS. DO NOT CUT, MODIFY, OR DRILL I-JOISTS EXCEPT AS DETAILED IN THE STRUCTURAL DRAWINGS.

G. PROVIDE TENSION BRIDGING PER MANUFACTURERS REQUIREMENTS.

H. CONTRACTOR SHALL COORDINATE ALL PLUMBING, ELECTRICAL, MECHANICAL, FIRE PROTECTION, AND OTHER EQUIPMENT REQUIRED BY OTHER TRADES. CONFLICTS WITH JOIST STRUCTURAL REQUIREMENTS SHALL BE BROUGHT TO THE IMMEDIATE ATTENTION OF THE ARCHITECT.

I. PROVIDE MINIMUM BEARING AT JOIST ENDS AND AT INTERMEDIATE SUPPORTS PER DETAIL 1 UON ON STRUCTURAL DRAWINGS. NAIL JOISTS AT BEARING PER DETAILS.

J. PROVIDE 1-1/2" DIAMETER KNOCKOUT HOLES AT 12" OC IN I-JOIST BLOCKING AT EAVES AND WHERE NOTED ON DRAWINGS. HOLES THROUGH I-JOIST WEBS SHALL BE PERMITTED WHERE NOTED ON THESE DRAWINGS. SEE 2/- FOR ALLOWABLE HOLE LOCATIONS.

K. LATERAL SUPPORT SHALL BE PROVIDED AT ALL BEARING LOCATIONS. WHERE TOP FLANGE HANGERS ARE USED, PROVIDE LATERAL BLOCKING AT ENDS OF JOISTS PER 4/S8.21.

L. ALIGN I-JOISTS OVER WALL STUDS. ADD WALL STUDS AS REQUIRED TO ALIGN WITH JOIST.

1 WOOD I-JOIST NOTES
NOT TO SCALE

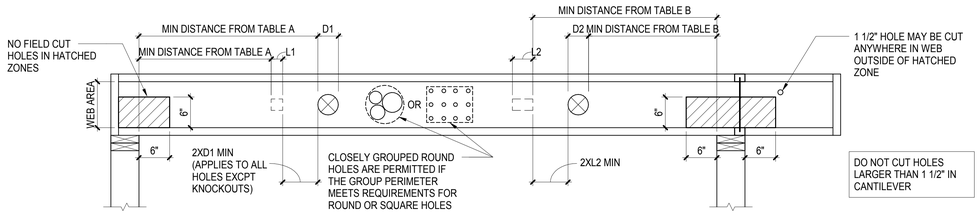

NOTES:

1. INFORMATION PROVIDED IS FOR TJI WOOD I-JOISTS MANUFACTURED BY WEYERHAEUSER. SEE MANUFACTURER'S REQUIREMENTS FOR JOISTS BY OTHER MANUFACTURERS.
2. SIZES SHOWN ARE HOLES SIZES, NOT DUCT SIZES. RECTANGULAR HOLES ARE BASED ON MEASUREMENT OF LONGEST SIDE.

TABLE A, END SUPPORT: MINIMUM DISTANCE FROM EDGE OF HOLE TO INSIDE FACE OF NEAREST END SUPPORT

DEPTH	TJI	ROUND HOLE SIZE									SQUARE OR RECTANGULAR HOLE SIZE									
		2"	3"	4"	5"	6 1/2"	7"	8 7/8"	11"	13"	2"	3"	4"	5"	6 1/2"	7"	8 7/8"	11"	13"
9 1/2"	110	1'-0"	1'-6"	2'-0"	3'-0"	5'-0"					1'-0"	1'-6"	2'-6"	3'-6"	4'-6"				
	210	1'-0"	1'-6"	2'-0"	3'-0"	5'-6"					1'-0"	2'-0"	2'-6"	4'-0"	5'-0"				
	230	1'-6"	2'-0"	2'-6"	3'-6"	5'-6"					1'-0"	2'-0"	3'-0"	4'-6"	5'-0"				
11 7/8"	110	1'-0"	1'-0"	1'-6"	2'-0"	2'-6"	3'-0"	5'-6"			1'-0"	1'-6"	2'-0"	2'-6"	4'-6"	5'-0"	6'-0"		
	210	1'-0"	1'-6"	2'-0"	2'-0"	3'-0"	3'-6"	6'-0"			1'-0"	1'-6"	2'-6"	3'-0"	5'-0"	5'-6"	6'-6"		
	230	1'-0"	1'-6"	2'-0"	2'-6"	3'-0"	3'-6"	6'-6"			1'-0"	2'-0"	2'-6"	3'-6"	5'-6"	5'-6"	7'-0"		
	360	1'-6"	2'-0"	3'-0"	3'-6"	4'-6"	5'-0"	7'-0"			1'-6"	2'-6"	3'-6"	4'-6"	6'-6"	6'-6"	7'-6"		
	560	1'-6"	2'-6"	3'-0"	4'-0"	5'-6"	6'-0"	8'-6"			2'-6"	3'-6"	4'-6"	5'-6"	7'-0"	7'-6"	8'-0"		
14"	110	1'-0"	1'-0"	1'-0"	1'-0"	1'-6"	2'-0"	3'-0"	5'-6"		1'-0"	1'-0"	1'-6"	2'-0"	3'-6"	4'-0"	6'-0"	8'-0"	
	210	1'-0"	1'-0"	1'-0"	1'-6"	2'-0"	2'-6"	3'-6"	6'-0"		1'-0"	1'-0"	2'-0"	2'-6"	4'-0"	4'-6"	6'-6"	8'-6"	
	230	1'-0"	1'-0"	1'-0"	1'-6"	2'-6"	2'-6"	4'-0"	7'-0"		1'-0"	1'-0"	2'-0"	3'-0"	4'-0"	5'-0"	7'-0"	9'-0"	
	360	1'-0"	1'-0"	1'-6"	2'-6"	3'-6"	4'-0"	5'-6"	8'-0"		1'-0"	1'-6"	2'-6"	4'-0"	6'-0"	6'-6"	8'-0"	9'-6"	
	560	1'-0"	1'-0"	2'-0"	3'-0"	4'-6"	5'-0"	6'-6"	9'-0"		1'-6"	3'-0"	4'-0"	5'-0"	7'-0"	7'-6"	9'-0"	10'-0"	
16"	110	1'-0"	1'-0"	1'-0"	1'-0"	1'-0"	1'-0"	2'-0"	3'-6"	5'-0"	1'-0"	1'-0"	1'-0"	1'-6"	3'-0"	3'-0"	5'-6"	7'-6"	10'-0"
	210	1'-0"	1'-0"	1'-0"	1'-0"	1'-0"	1'-6"	2'-6"	3'-6"	6'-0"	1'-0"	1'-0"	1'-0"	2'-0"	3'-0"	3'-6"	6'-6"	8'-0"	11'-0"
	230	1'-0"	1'-0"	1'-0"	1'-0"	1'-6"	1'-6"	3'-0"	4'-0"	7'-0"	1'-0"	1'-0"	1'-0"	2'-0"	3'-6"	4'-0"	7'-0"	9'-0"	11'-0"
	360	1'-0"	1'-0"	1'-0"	1'-0"	2'-6"	2'-6"	4'-6"	6'-6"	9'-0"	1'-0"	1'-0"	1'-6"	3'-0"	5'-0"	5'-6"	9'-0"	10'-0"	11'-6"
	560	1'-0"	1'-0"	1'-0"	1'-0"	2'-6"	3'-0"	5'-0"	7'-6"	10'-0"	1'-0"	2'-0"	3'-0"	4'-6"	6'-6"	7'-0"	10'-0"	11'-0"	12'-0"

TABLE B, INTERMEDIATE OR CANTILEVER SUPPORT: MINIMUM DISTANCE FROM EDGE OF HOLE TO INSIDE FACE OF NEAREST INTERMEDIATE OR CANTILEVER SUPPORT

DEPTH	TJI	ROUND HOLE SIZE									SQUARE OR RECTANGULAR HOLE SIZE									
		2"	3"	4"	5"	6 1/2"	7"	8 7/8"	11"	13"	2"	3"	4"	5"	6 1/2"	7"	8 7/8"	11"	13"
9 1/2"	110	2'-0"	2'-6"	3'-6"	4'-6"	7'-6"					1'-6"	2'-6"	3'-6"	5'-6"	6'-6"				
	210	2'-0"	2'-6"	3'-6"	5'-0"	8'-0"					2'-0"	3'-0"	4'-0"	6'-6"	7'-6"				
	230	2'-6"	3'-0"	4'-0"	5'-6"	8'-6"					2'-0"	3'-6"	4'-6"	6'-6"	7'-6"				
11 7/8"	110	1'-0"	1'-0"	1'-6"	2'-6"	4'-0"	4'-6"	8'-6"			1'-0"	1'-6"	2'-6"	4'-0"	7'-0"	7'-0"	9'-6"		
	210	1'-0"	1'-0"	2'-0"	3'-0"	4'-6"	5'-0"	9'-0"			1'-0"	2'-0"	3'-0"	4'-6"	8'-0"	8'-0"	10'-0"		
	230	1'-0"	2'-0"	2'-6"	3'-6"	5'-0"	5'-6"	10'-0"			1'-0"	2'-6"	3'-6"	5'-0"	8'-6"	9'-0"	10'-6"		
	360	2'-0"	3'-0"	4'-0"	5'-6"	7'-0"	7'-6"	11'-0"			2'-0"	3'-6"	5'-0"	7'-0"	9'-6"	9'-6"	11'-0"		
	560	1'-6"	3'-0"	4'-6"	5'-6"	8'-0"	8'-6"	12'-0"			3'-0"	4'-6"	6'-0"	8'-0"	10'-6"	11'-0"	12'-0"		
14"	110	1'-0"	1'-0"	1'-0"	1'-0"	2'-0"	2'-6"	4'-6"	8'-6"		1'-0"	1'-0"	1'-0"	2'-6"	5'-0"	6'-0"	9'-0"	12'-0"	
	210	1'-0"	1'-0"	1'-0"	1'-0"	2'-6"	3'-0"	5'-6"	9'-6"		1'-0"	1'-0"	2'-0"	3'-6"	6'-0"	7'-0"	10'-0"	13'-0"	
	230	1'-0"	1'-0"	1'-0"	2'-0"	3'-6"	4'-0"	6'-0"	10'-6"		1'-0"	1'-0"	2'-6"	4'-0"	6'-6"	7'-6"	11'-0"	13'-6"	
	360	1'-0"	1'-0"	2'-0"	3'-6"	5'-6"	6'-0"	8'-6"	12'-6"		1'-0"	2'-0"	4'-0"	5'-6"	9'-0"	10'-0"	12'-0"	14'-0"	
	560	1'-0"	1'-0"	1'-6"	3'-6"	5'-6"	6'-6"	9'-6"	13'-6"		1'-0"	3'-0"	5'-0"	7'-0"	10'-0"	11'-6"	13'-6"	15'-0"	
16"	110	1'-0"	1'-0"	1'-0"	1'-0"	1'-0"	1'-0"	2'-6"	5'-0"	8'-6"	1'-0"	1'-0"	1'-0"	1'-0"	3'-6"	4'-6"	8'-6"	11'-6"	15'-0"
	210	1'-0"	1'-0"	1'-0"	1'-0"	1'-0"	1'-0"	3'-6"	6'-0"	10'-0"	1'-0"	1'-0"	1'-0"	1'-6"	4'-6"	5'-6"	10'-0"	12'-6"	16'-0"
	230	1'-0"	1'-0"	1'-0"	1'-0"	1'-6"	2'-0"	4'-0"	6'-6"	11'-0"	1'-0"	1'-0"	1'-0"	2'-6"	5'-0"	6'-0"	10'-6"	13'-6"	16'-6"
	360	1'-0"	1'-0"	1'-0"	1'-0"	3'-0"	4'-0"	6'-6"	10'-0"	13'-6"	1'-0"	1'-0"	2'-0"	4'-0"	7'-6"	8'-6"	13'-0"	14'-6"	17'-0"
	560	1'-0"	1'-0"	1'-0"	1'-0"	2'-6"	3'-6"	7'-0"	11'-0"	15'-0"	1'-0"	1'-0"	3'-6"	5'-6"	9'-0"	10'-0"	14'-6"	16'-0"	18'-0"

2 TYPICAL PENETRATIONS IN WOOD I-JOISTS
1" = 1'-0"

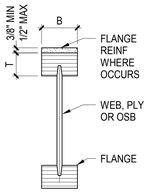

I - JOIST

JOIST SIZE	T FLANGE	B FLANGE	MINIMUM BEARING DISTANCE	
			END OR HANGER	INTERMEDIATE
TJI 110	1 1/4 - 1 3/8	1 3/4	1-3/4"	3-1/2"
TJI 210	1 1/4 - 1 3/8	2 1/16	1-3/4"	3-1/2"
TJI 230	1 1/4 - 1 3/8	2 5/16	1-3/4"	3-1/2"
TJI 360	1 3/8	2 5/16	1-3/4"	3-1/2"
TJI 560	1 3/8	3 1/2	1-3/4"	3-1/2"

NOTES:

1. INFORMATION PROVIDED IS FOR TJI WOOD I-JOIST MANUFACTURED BY WEYERHAEUSER. SEE MANUFACTURER'S REQUIREMENTS FOR JOISTS BY OTHER MANUFACTURERS.
2. PROVIDE STIFFENERS PER 1/S8.21 AT END BEARING AND INTERMEDIATE BEARING LOCATIONS WHERE REQUIRED PER SCHEDULE.
3. PROVIDE STIFFENERS PER 1/S8.21 AT ALL HANGERS NOT SPECIFICALLY DESIGNED TO LATERALLY SUPPORT THE TOP FLANGE.

3 TYPICAL WOOD I-JOIST DIMENSIONS
1" = 1'-0"

MARK ON PLANS	JOIST SIZE	SPACING	MAX SPAN	MIN BEARING LENGTH		BEARING STIFFENERS REQUIRED	HANGER WHERE REQUIRED		NOTES
				END OR HANGER	INTERMEDIATE		TOP FLANGE	FACE MOUNT	
J1	11 7/8 TJI 210	19.2"	15'-0"	1 3/4"	3 1/2"	NO	ITS2.06/11.88	IUS2.06/11.88	
	11 7/8 LPI-20	19.2"	15'-0"	1 3/4"	3 1/2"	NO	ITS2.56/11.88	IUS2.56/11.88	
	11 7/8 BCI-6000-1.8	19.2"	15'-0"	1 3/4"	3 1/2"	NO	ITS2.37/11.88	IUS2.37/11.88	
J2	11 7/8 TJI 560	16'-0"	21'-6"	1 3/4"	3 1/2"	NO	ITS3.56/11.88	IUS3.56/11.88	
	11 7/8 LPI-42	16'-0"	21'-6"	1 3/4"	3 1/2"	NO	ITS3.56/11.88	IUS3.56/11.88	
	11 7/8 BCI-90-2.0	16'-0"	21'-6"	1 3/4"	3 1/2"	NO	ITS3.56/11.88	IUS3.56/11.88	
J3	11 7/8 TJI 560	12"	23'-6"	1 3/4"	3 1/2"	NO	ITS3.56/11.88	IUS3.56/11.88	
	11 7/8 LPI-42	12"	23'-6"	1 3/4"	3 1/2"	NO	ITS3.56/11.88	IUS3.56/11.88	
	11 7/8 BCI-90-2.0	12"	23'-6"	1 3/4"	3 1/2"	NO	ITS3.56/11.88	IUS3.56/11.88	
J4	11 7/8 TJI 560	16"	23'-6"	1 3/4"	3 1/2"	NO	ITS3.56/11.88	IUS3.56/11.88	ROOF
	11 7/8 LPI-42	16"	23'-6"	1 3/4"	3 1/2"	NO	ITS3.56/11.88	IUS3.56/11.88	ROOF
	11 7/8 BCI-90-2.0	16"	23'-6"	1 3/4"	3 1/2"	NO	ITS3.56/11.88	IUS3.56/11.88	ROOF
J5	11 7/8 TJI 560	16"	12'-0"	1 3/4"	3 1/2"	NO	ITS3.56/11.88	IUS3.56/11.88	STAIR AND ELEVATOR LOBBY
	11 7/8 LPI-42	16"	12'-0"	1 3/4"	3 1/2"	NO	ITS3.56/11.88	IUS3.56/11.88	STAIR AND ELEVATOR LOBBY
	11 7/8 BCI-90-2.0	16"	12'-0"	1 3/4"	3 1/2"	NO	ITS3.56/11.88	IUS3.56/11.88	STAIR AND ELEVATOR LOBBY
J11	2X8	16"	7-0"	1 3/4"	3 1/2"	-			CORRIDOR
J12	2X10	16"	8'-0"	1 3/4"	3 1/2"	-			BALCONY (SHAPED)
J13	2X10	16"	12'-0"	1 3/4"	3 1/2"	-			STAIR ROOF

4 WOOD JOIST SCHEDULE
NOT TO SCALE

AXIS GFA
1130 WESTWOOD BLVD
LOS ANGELES, CA 90024
T 310.209.7520
F 310.209.7516
www.axisgfa.com

PROJECT NAME

Residence Inn® Marriott.

840 KILDARE STREET,
LANCASTER, CA

OWNER:

INSITE REAL STATE DEVELOPMENT
6265 VARIEL AVENUE
WOODLAND HILLS, CA 91367

Thornton Tomasetti
Thornton Tomasetti, Inc.
707 Wilshire Blvd, Suite 4450
Los Angeles, CA 90017-3618
T 213.330.7000 F 213.330.7001

Project Status

REGISTERED PROFESSIONAL ENGINEER
CHANDAN GANTRU DRAKER
No. S4416
Exp. 6/30/18
STRUCTURAL
STATE OF CALIFORNIA

NO.	DATE	ISSUES AND REVISIONS	BY
	10.13.17	DESIGN DEVELOPMENT	
	11.20.17	CD PROGRESS SET	
	12.18.17	PLAN CHECK	
	02.16.18	PLAN CHECK	

DATE

SCALE AS NOTED

PROJECT NUMBER

COMPUTER FILE S17081

PROJECT NAME

DESCRIPTION
TYPICAL JOIST DETAILS

SHEET NUMBER
S8.20

ALL DRAWINGS AND WRITTEN MATERIAL APPEARING HEREIN CONSTITUTE ORIGINAL AND UNPUBLISHED WORK OF THE ARCHITECT AND MAY NOT BE DUPLICATED, USED OR DISCLOSED WITHOUT WRITTEN CONSENT OF THE ARCHITECT

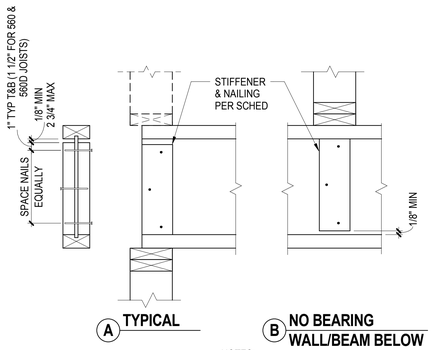

NOTES:
1. PLYWOOD STIFFENERS SHALL MEET THE REQUIREMENTS OF PS1 OR PS2, WITH FACE GRAIN VERTICAL. 2x4 STIFFENERS SHALL BE CONSTRUCTION GRADE OR BETTER.

TJI	DEPTH (IN.)	MINIMUM WEB STIFFENER SIZE	NAIL TYPE	# OF NAILS	
				END	INT.
110	ALL	5/8" x 2 5/16" (1)	8D (0.113" x 2 1/2")	3	3
210	ALL	3/4" x 2 5/16" (1)		3	3
210, 360	ALL	7/8" x 2 5/16" (1)		3	3
560	ALL	2X4 (2)	16D (0.135" x 3 1/2")	3	3
560D	18"	2X4 (2)	16D (0.135" x 3 1/2")	4	4
	20"			5	5
	22" (3)			6	11
	24" (3)			6	13

1 I-JOIST WEB STIFFENER
NOT TO SCALE

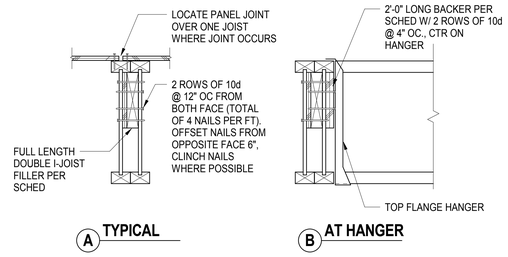

FLANGE WIDTH	DOUBLE I-JOIST FILLER	BACKER AT TOP FLANGE HANGER
1 3/4"	2 x	3/4" PLY
2 1/2"	2 x & 1/2" PLY	1" PLY
3 1/2"	DBL 2x	2x

NOTES:
1. DEPTH OF FILLER / BACKER SHALL BE 5 1/2" FOR 9 1/2" OR 11 7/8" I-JOIST, 7 1/4" FOR 14" OR 16" I-JOIST, 9 1/4" FOR 18" DEEPER I-JOIST.
2. PLYWOOD FILLER / BACKER SHALL MEET THE REQUIREMENTS OF PS1 OR PS2. 2x FILLER / BACKER SHALL BE CONSTRUCTION GRADE OR BETTER.

2 DOUBLE I-JOIST ASSEMBLY
NOT TO SCALE

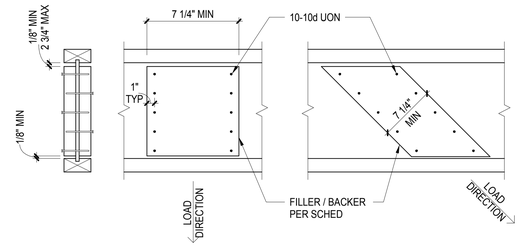

FLANGE WIDTH	FILLER/BACKER
1 3/4"	3/4" PLY
2 1/2"	1" PLY
3 1/2"	2x

NOTES:
1. PLYWOOD FILLER / BACKER SHALL MEET THE REQUIREMENTS OF PS1 OR PS2, WITH FACE GRAIN PARALLEL TO LOAD DIRECTION. 2x FILLER / BACKER SHALL BE CONSTRUCTION GRADE OR BETTER.

3 FILLER OR BACKER BLOCK
NOT TO SCALE

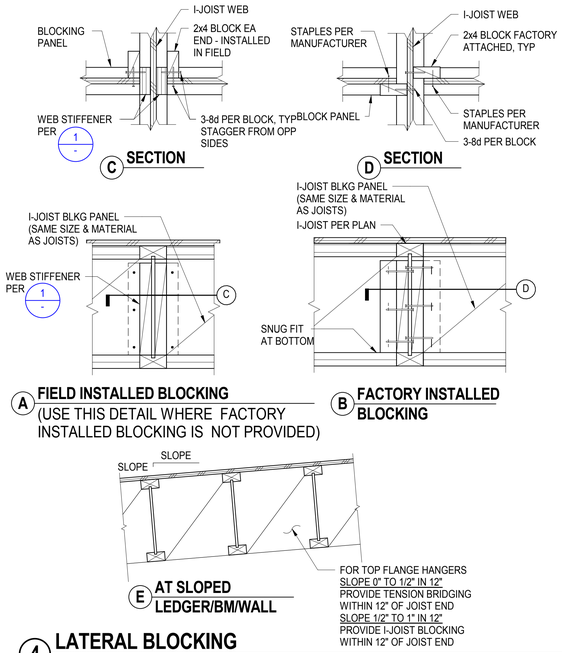

4 LATERAL BLOCKING
1" = 1'-0"

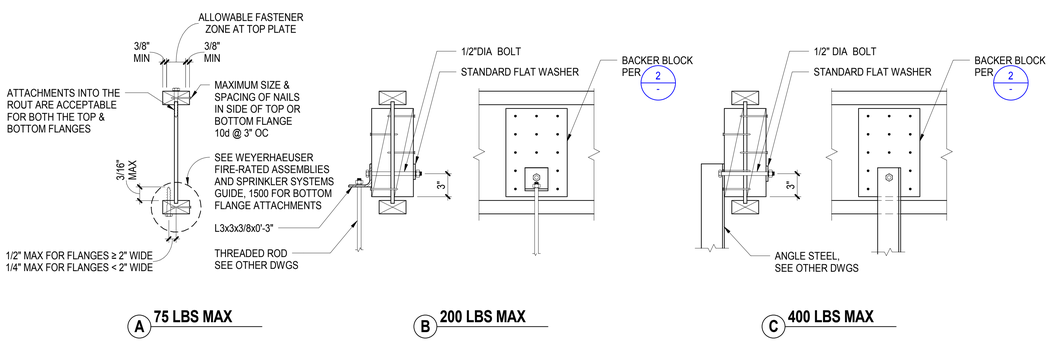

10 HUNG SUPPORTS AT I-JOIST
NOT TO SCALE

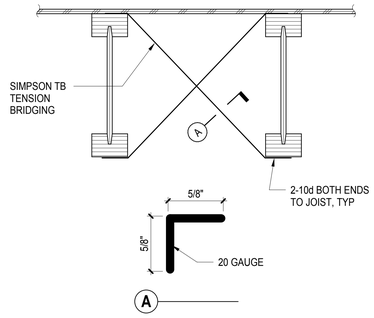

6 I-JOIST BRIDGING
NOT TO SCALE

AXIS GFA
1130 WESTWOOD BLVD
LOS ANGELES, CA 90024
T 310.209.7520
F 310.209.7516
www.axisgfa.com

PROJECT NAME

Residence Inn® Marriott.

840 KILDARE STREET,
LANCASTER, CA

OWNER:

INSITE REAL STATE DEVELOPMENT
6265 VARIEL AVENUE
WOODLAND HILLS, CA 91367

Thornton Tomasetti
Thornton Tomasetti, Inc.
707 Wilshire Blvd, Suite 4450
Los Angeles, CA 90017-3618
T 213.330.7000 F 213.330.7001

Project Status

REGISTERED PROFESSIONAL ENGINEER
CHAKAR GANTRI, SAN JOSE
No. S4416
Exp. 6/30/18
STRUCTURAL
STATE OF CALIFORNIA

NO.	DATE	ISSUES AND REVISIONS	BY
	10.13.17	DESIGN DEVELOPMENT	
	11.20.17	CD PROGRESS SET	
	12.18.17	PLAN CHECK	
	02.16.18	PLAN CHECK	

DATE

SCALE AS NOTED

PROJECT NUMBER

COMPUTER FILE S17081

PROJECT NAME

DESCRIPTION
TYPICAL JOIST DETAILS

SHEET NUMBER
S8.21

ALL DRAWINGS AND WRITTEN MATERIAL APPEARING HEREIN CONSTITUTE ORIGINAL AND UNPUBLISHED WORK OF THE ARCHITECT AND MAY NOT BE DUPLICATED, USED OR DISCLOSED WITHOUT WRITTEN CONSENT OF THE ARCHITECT

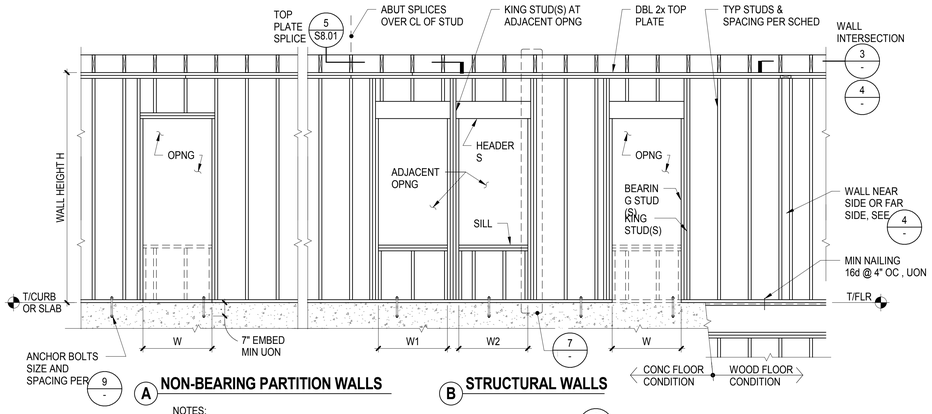

A NON-BEARING PARTITION WALLS

B STRUCTURAL WALLS

NOTES:
1. FOR HEADERS, SILLS, KING STUDS AND BEARING STUDS, SEE SCHEDULE PER DETAIL 6 -
2. SEE 1 S8.40 FOR FRAMING REQUIREMENTS AT SHEAR WALL PANEL JOINTS.

1 TYPICAL WALL FRAMING
NOT TO SCALE

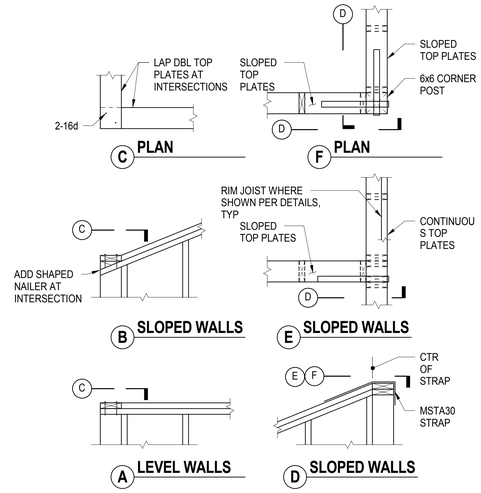

3 TYPICAL TOP PLATE INTERSECTIONS
NOT TO SCALE

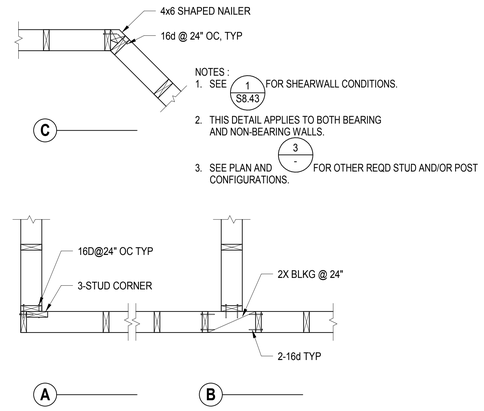

4 TYPICAL WALL INTERSECTIONS
NOT TO SCALE

STRUCTURAL WALLS							
STORY	HEIGHT	EXTERIOR		DEMISING		CORRIDOR	
		STUD SIZE	SPACING	STUD SIZE	SPACING	STUD SIZE	SPACING
FIFTH	10'-4"	2X6	16"	2X4	16" STAGG	2X6	16"
FOURTH	10'-4"	2X6	16"	3X4	16" STAGG	2X6	16"
THIRD	10'-4"	2X6	12"	3X4	16" STAGG	3X6	16"
SECOND	11'-0"	3X6	16"	4X4	16" STAGG	3X6	16"
FIRST	13'-0"	2X6	16"	4X4	16" STAGG	2X6	16"

A

NON-BEARING PARTITION		
WALL HEIGHT	STUD SIZE	SPACING
H ≤ 15'-0"	2X4	16"
15'-0" < H ≤ 24'-0"	2X6	8"

B

NOTE:

1. STRUCTURAL WALLS ARE DEFINED AS EXTERIOR, BEARING, AND/OR SHEAR WALLS. ALL OTHER WALLS ARE NON-BEARING PARTITION WALLS
2. SEE 4/S8.30 FOR MINIMUM STUDS SIZES FOR SHEAR WALLS, WHICH MAY SUPERCEDE THE INFORMATION SHOWN ABOVE
3. USE MIN DFL#2 GRADE FOR STUDS.

5 TYPICAL WALL STUD SCHEDULE
NOT TO SCALE

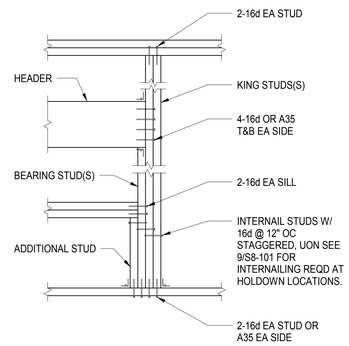

STRUCTURAL WALL SCHEDULE[2]					
OPENING WIDTH	KING STUD(S)	ADJACENT OPENINGS		BEARING STUD(S)	SILL[3] SIZE
		COMBINED WIDTH W1+ W2	KING STUD(S)		
W≤ 6'-0"	3-2x SW	6'-0" MAX	4-2x SW	1-2x SW	2-2x SW
W≤ 10'-0"	4-2x SW	10'-0" MAX	6-2x SW	1-2x SW	2-2x SW

A

HEADER SCHEDULE	
LABEL	SIZE
H1	4X6
H2	6X6
H3	6X8
H4	6X10

C

NON-BEARING PARTITION WALL SCHEDULE[2]					
OPENING WIDTH	KING STUD(S)	ADJACENT OPENINGS		BEARING STUD(S)	SILL[3] SIZE
		COMBINED WIDTH W1+ W2	KING STUD(S)		
W≤ 6'-0"	2-2x SW	6'-0" MAX	3-2x SW	1-2x SW	2-2x SW
W≤ 10'-0"	2-2x SW	10'-0" MAX	3-2x SW	1-2x SW	2-2x SW

B

NOTES:

1. AT SHEAR WALL ENDS, USE SHEAR WALL POSTS AND ADD KING STUD(S) TO HD POST IF REQUIRED TO CREATE A TOTAL POST WIDTH GREATER THAN THE SCHEDULED KING POST.
2. SW IS DEFINED AS STUD WIDTH.
3. INTERNAIL 2x HEADER & SILL WITH 10d @ 6" MINIMUM.
4. FOR DEFINITION OF STRUCTURAL AND NON-BEARING PARTITION WALL DEFINITION, SEE 5 -.
5. FOR STRUCTURAL WALLS, IF NO HEADER IS CALLED OUT ON PLAN PROVIDE SW X 6 HEADERS.
6. FOR NON-BEARING WALLS, PROVIDE 2-2 X SW HEADERS FOR OPENING WIDTH LESS THAN 6'-0" AND 4-2 X SW HEADERS FOR OPENING WIDTH GREATER THAN 6'-0" (MAX WIDTH 10'-0").

6 TYPICAL FRAMING AND FRAMING SCHEDULE AT WALL OPENING
NOT TO SCALE

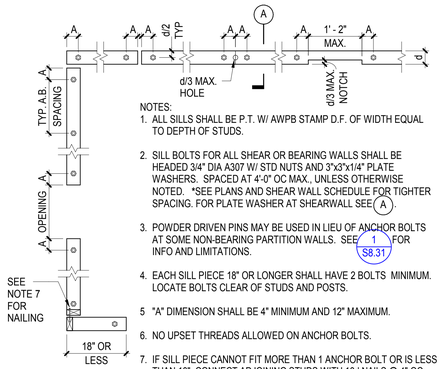

NOTES:
1. ALL SILLS SHALL BE P.T. W/ AWPB STAMP D.F. OF WIDTH EQUAL TO DEPTH OF STUDS.
2. SILL BOLTS FOR ALL SHEAR OR BEARING WALLS SHALL BE HEADED 3/4" DIA A307 W/ STD NUTS AND 3"x3"x1/4" PLATE WASHERS. SPACED AT 4'-0" OC MAX., UNLESS OTHERWISE NOTED. *SEE PLANS AND SHEAR WALL SCHEDULE FOR TIGHTER SPACING. FOR PLATE WASHER AT SHEARWALL SEE A.
3. POWDER DRIVEN PINS MAY BE USED IN LIEU OF ANCHOR BOLTS AT SOME NON-BEARING PARTITION WALLS. SEE 1 S8.31 FOR INFO AND LIMITATIONS.
4. EACH SILL PIECE 18" OR LONGER SHALL HAVE 2 BOLTS MINIMUM. LOCATE BOLTS CLEAR OF STUDS AND POSTS.
5 "A" DIMENSION SHALL BE 4" MINIMUM AND 12" MAXIMUM.
6. NO UPSET THREADS ALLOWED ON ANCHOR BOLTS.
7. IF SILL PIECE CANNOT FIT MORE THAN 1 ANCHOR BOLT OR IS LESS THAN 18", CONNECT ADJOINING STUDS WITH 16d NAILS @ 4" OC
8. RETIGHTEN ALL BOLTS PRIOR TO CLOSING IN.

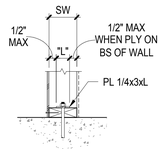

A SECTION AT SHEAR WALL

*THE HOLE IN THE PLATE WASHER IS PERMITTED TO BE DIAGONALLY SLOTTED WITH A WIDTH UP TO 3/16" LARGER THAN THE BOLT DIAMETER AND A SLOT LENGTH NOT TO EXCEED 1 3/4", PROVIDED A STANDARD CUT WASHER IS PLACED BETWEEN THE PLATE WASHER AND THE NUT.

9 TYPICAL ANCHOR BOLT AND SILL PLATE
NOT TO SCALE

AXIS GFA
1130 WESTWOOD BLVD
LOS ANGELES, CA 90024
T 310.209.7520
F 310.209.7516
www.axisgfa.com

PROJECT NAME

Residence Inn® Marriott.

840 KILDARE STREET,
LANCASTER, CA

OWNER:

INSITE REAL STATE DEVELOPMENT
6265 VARIEL AVENUE
WOODLAND HILLS, CA 91367

Thornton Tomasetti
Thornton Tomasetti, Inc.
707 Wilshire Blvd, Suite 4450
Los Angeles, CA 90017-3618
T 213.330.7000 F 213.330.7001

Project Status

REGISTERED PROFESSIONAL ENGINEER
CONRAD A. GANTRI, SE
No. S4416
Exp. 6/30/18
STRUCTURAL
STATE OF CALIFORNIA

NO.	DATE	ISSUES AND REVISIONS	BY
	10.13.17	DESIGN DEVELOPMENT	
	11.20.17	CD PROGRESS SET	
	12.18.17	PLAN CHECK	
	02.16.18	PLAN CHECK	

DATE

SCALE AS NOTED

PROJECT NUMBER

COMPUTER FILE S17081

PROJECT NAME

DESCRIPTION
TYPICAL WOOD WALL DETAILS

SHEET NUMBER
S8.30

ALL DRAWINGS AND WRITTEN MATERIAL APPEARING HEREIN CONSTITUTE ORIGINAL AND UNPUBLISHED WORK OF THE ARCHITECT AND MAY NOT BE DUPLICATED, USED OR DISCLOSED WITHOUT WRITTEN CONSENT OF THE ARCHITECT

NOTES:
1. AT CONTRACTOR'S OPTIONS ANCHOR IS:

	NO CURB		CURB	
	ANCHOR SIZE	SPACING	ANCHOR SIZE	SPACING
ANCHOR BOLT	1/2" DIA	4'-0"	3/8" DIA	2'-8"
EXPANSION ANCHOR	1/2" DIA	4'-0"	3/8" DIA	2'-8"
SCREW	1/2" DIA	4'-0"	3/8" DIA	2'-8"
PAF	0.145" DIA	2'-8"	NOT ALLOWED	N/A

2. SEE DETAIL 1 ON THIS SHEET FOR TYPICAL WALL FRAMING. SEE DETAIL 6 ON THIS SHEET FOR FRAMING SCHEDULE AT OPENINGS.
3. FOR CURB CONDITION SEE (B).

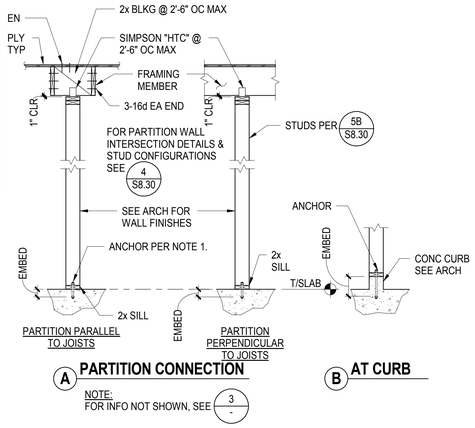

(A) PARTITION CONNECTION

NOTE:
FOR INFO NOT SHOWN, SEE 3 -

(B) AT CURB

(1) TYPICAL NON-BEARING WALL PARTITION
1/2" = 1'-0"

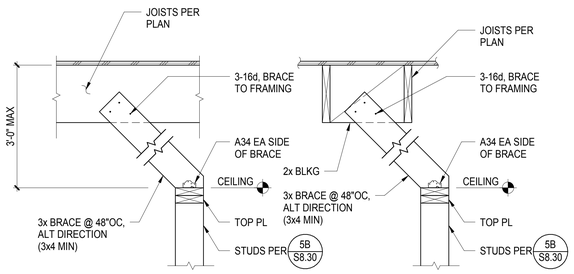

(E) PARTITION PARALLEL & PERPENDICULAR TO JOISTS (ALTERNATE DETAIL)

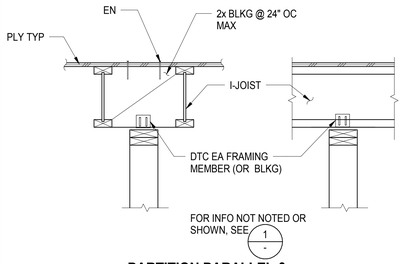

(C) PARTITION PARALLEL & PERPENDICULAR TO I-JOISTS

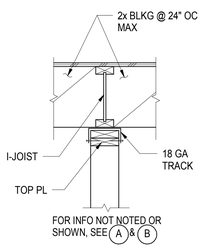

(D) PARTITION PARALLEL TO I-JOIST DIRECTLY UNDER I-JOIST CONNECTION

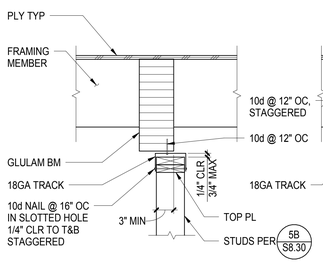

(A) PARTITION PARALLEL TO GLULAM BEAM TOP CONNECTION

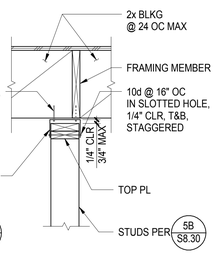

(B) PARTITION PARALLEL TO JOIST, DIRECTLY UNDER JOIST TOP CONNECTION

(2) TYPICAL NON-BEARING WALL TOP CONNECTION1
NOT TO SCALE

AXIS GFA
1130 WESTWOOD BLVD
LOS ANGELES, CA 90024
T 310.209.7520
F 310.209.7516
www.axisgfa.com

PROJECT NAME

Residence Inn® Marriott.

840 KILDARE STREET,
LANCASTER, CA

OWNER:

INSITE REAL STATE DEVELOPMENT
6265 VARIEL AVENUE
WOODLAND HILLS, CA 91367

Thornton Tomasetti
Thornton Tomasetti, Inc.
707 Wilshire Blvd, Suite 4450
Los Angeles, CA 90017-3618
T 213.330.7000 F 213.330.7001

Project Status

REGISTERED PROFESSIONAL ENGINEER
CHANDRA DANTRO SANDERS
No. S4416
Exp. 6/30/18
STRUCTURAL
STATE OF CALIFORNIA

NO.	DATE	ISSUES AND REVISIONS	BY
	10.13.17	DESIGN DEVELOPMENT	
	11.20.17	CD PROGRESS SET	
	12.18.17	PLAN CHECK	
	02.16.18	PLAN CHECK	

DATE

SCALE AS NOTED

PROJECT NUMBER

COMPUTER FILE S17081

PROJECT NAME

DESCRIPTION
TYPICAL WOOD WALL DETAILS

SHEET NUMBER
S8.31

ALL DRAWINGS AND WRITTEN MATERIAL APPEARING HEREIN CONSTITUTE ORIGINAL AND UNPUBLISHED WORK OF THE ARCHITECT AND MAY NOT BE DUPLICATED, USED OR DISCLOSED WITHOUT WRITTEN CONSENT OF THE ARCHITECT

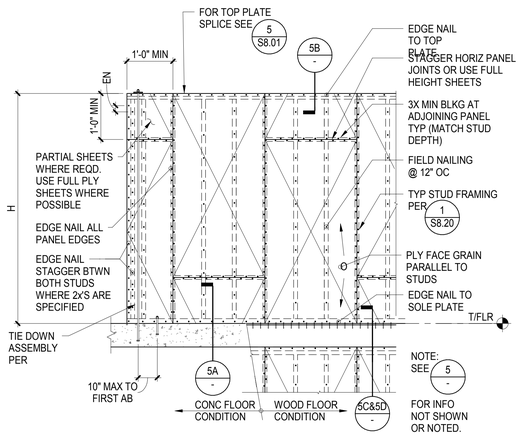

1 TYPICAL SHEAR WALL ELEVATION

NOT TO SCALE

SHEAR WALL CONNECTION SCHEDULE

SHEARWALL SYMBOL	DETAIL CONDITION						ALLOWABLE SHEAR (ASD)
	(A)		(B)	(C)		(D)	
	ANCHOR BOLT	MUD SILL	SHEAR CLIP	SOLE PLATE NAILING	SOLE PLATE SIZE	SHEAR CLIP	
XX / 6.1	3/4" DIA @ 4'-0" OC	2x	A35 OR LPT4 @ 16" OC	16d @ 6" OC	2x	A35 OR LPT4 @ 16" OC	340 LBS/FT
XX / 4.1	3/4" DIA @ 4'-0" OC	3x	A35 OR LPT4 @ 12" OC	16d @ 4" OC	2x	A35 OR LPT4 @ 12" OC	510 LBS/FT
XX / 3.1	3/4" DIA @ 2'-8" OC	3x	A35 OR LPT4 @ 12" OC	16D@3" OC OR 1/2" DIA X 7" LAG SCREWS OR 1/4" DIA X 5" SDS SCREWS @ 8" OC	2x	A35 OR LPT4 @ 12" OC	665 LBS/FT
XX / 2.1	3/4" DIA @ 2'-8" OC	3x	A35 OR LPT4 @ 8" OC	1/2" DIA X 7" LAG SCREWS OR 1/4" DIA X 5" SDS @ 6" OC	2x	A35 OR LPT4 @ 8" OC	870 LBS/FT
XX / 4.2	3/4" DIA @ 1'-4" OC	3x	A35@12" OC + LPT4@12" OC	1/2" DIA X 7" LAG SCREWS OR 1/4" DIA X 5" SDS SCREWS @ 6" OC	2x	A35@12" OC + LPT4@12" OC	1020 LBS/FT
XX / 3.2	3/4" DIA @ 1'-4" OC	3x	A35@12" OC + LPT4@12" OC	1/2" DIA X 7" LAG SCREWS OR 1/4" DIA X 5" SDS SCREWS @ 4" OC	2x	A35@12" OC + LPT4@12" OC	1330 LBS/FT
XX / 2.2	3/4" DIA @ 1'-4" OC	3x	A35@8" OC + LPT4@8" OC	1/2" DIA X 7" LAG SCREWS OR 1/4" DIA X 5" SDS SCREWS @ 3" OC	2x	A35@8" OC + LPT4@8" OC	1740 LBS/FT

2 SHEAR WALL SCHEDULE

1" = 1'-0"

NOTES:

1. USE 10d (2 1/8" LONG) COMMON WIRE NAILS UON
2. #.1 — FIRST NUMBER SHOWN IN SYMBOL REPRESENTS PLYWOOD PANEL EDGE NAIL SPACING IN INCHES
3. # 2 — DENOTES PLYWOOD ON BOTH SIDES OF WALL
4. PROVIDE 3x FRAMING MEMBERS AT ALL PLYWOOD ADJOINING PANEL EDGES. STAGGER NAILS ON EACH SIDE OF STUD WHERE PLYWOOD IS ON BOTH SIDES
5. USE LTP4 AS ALTERNATE TO A35 UON
6. SEE DETAIL 9/S8-100 FOR ANCHOR BOLT AND SILL DETAIL.
7. PILOT DRILL HOLES FOR SOLE PLATE NAILING OR BOLTING
8. NAILS INTO PRESSURE TREATED MUD SILL SHALL BE GALVANIZED FOR NAILS IN FIRE TREATED WOOD SEE GENERAL NOTES.
9. SEE DETAIL 1/- FOR TYPICAL SHEAR WALL FRAMING ELEVATION
10. SEE PLAN AND DETAIL 9/- FOR SHEAR WALL HOLDOWNS
11. 3x BLKG MIN AT 2 SIDE CLIPS
12. FOR SHEATHING TYPE SEE GENERAL NOTES. WHERE FIRE TREATMENT IS APPLIED TO WALL SHEATHING, WALL SHEATHING SHALL BE 9/16" THICK, SEE GENERAL NOTES.
13. PLATE WASHER TO MUD SILL SHALL BE 3X3X1/4" FOR 2X4 WALL. PLATE WASHER TO MUD SILL SHAL BE MIN 5X3X1/4" FOR 2X6 WALL. MAX DISTANCE FROM WALL SHEATHING TO EDGE OF PLATE IS 1/2". PLATE WASHER CAN BE SLOTTED WHERE STANDARD WASHER IS PLACED ON TOP OF PLATE WASHER.

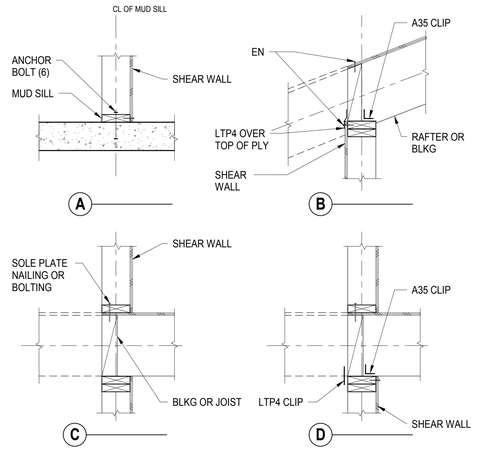

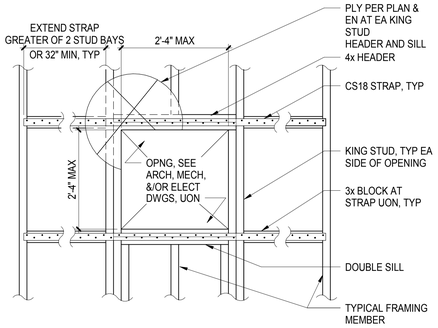

NOTES:

1. FOR INFO NOT SHOWN OR NOTED, SEE 1 S8.20 & 1 -
2. NOTIFY "SEOR" FOR PERMISSION
3. FOR OPENING OF 8"x8" OR LESS IN BETWEEN WALL STUDS, BLOCKING AND STRAPS ARE NOT REQUIRED

3 TYPICAL SMALL OPENING IN SHEARWALL

NOT TO SCALE

AXIS GFA

1130 WESTWOOD BLVD
LOS ANGELES, CA 90024
T 310.209.7520
F 310.209.7516
www.axisgfa.com

PROJECT NAME

Residence Inn® Marriott.

840 KILDARE STREET,
LANCASTER, CA

OWNER:

INSITE REAL STATE DEVELOPMENT
6265 VARIEL AVENUE
WOODLAND HILLS, CA 91367

Thornton Tomasetti

Thornton Tomasetti, Inc.
707 Wilshire Blvd, Suite 4450
Los Angeles, CA 90017-3618
T 213.330.7000 F 213.330.7001

Project Status

REGISTERED PROFESSIONAL ENGINEER
CONRAD A. GANTRO, JR.
No. S4416
Exp. 6/30/18
STRUCTURAL
STATE OF CALIFORNIA

NO.	DATE	ISSUES AND REVISIONS	BY
	10.13.17	DESIGN DEVELOPMENT	
	11.20.17	CD PROGRESS SET	
	12.18.17	PLAN CHECK	
	02.16.18	PLAN CHECK	

DATE

SCALE AS NOTED

PROJECT NUMBER

COMPUTER FILE **S17081**

PROJECT NAME

DESCRIPTION
TYPICAL WOOD SHEAR WALL DETAILS

SHEET NUMBER
S8.40

ALL DRAWINGS AND WRITTEN MATERIAL APPEARING HEREIN CONSTITUTE ORIGINAL AND UNPUBLISHED WORK OF THE ARCHITECT AND MAY NOT BE DUPLICATED, USED OR DISCLOSED WITHOUT WRITTEN CONSENT OF THE ARCHITECT

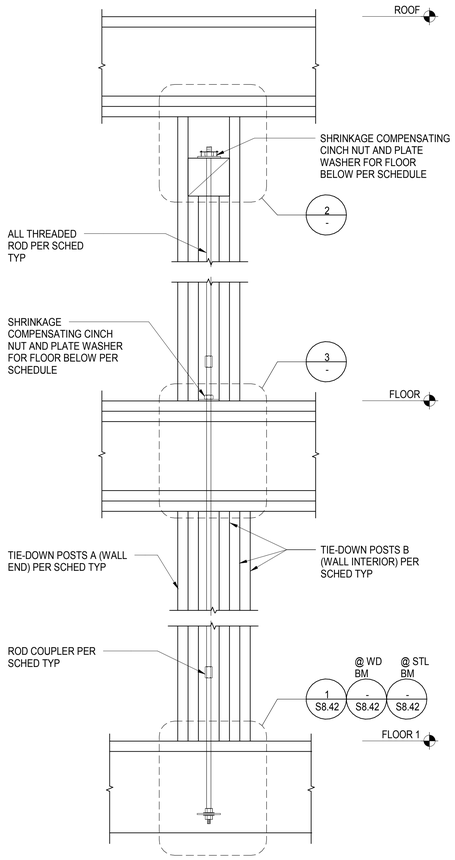

TIE-DOWN SYSTEM NOTES:

1. THE CONTINUOUS ROD SYSTEM SHALL CONSIST OF THREADED STEEL ROD, STEEL BEARING PLATES, COMPRESSION POSTS, BLOCKS, AND CINCH NUT. THE CINCH NUT SHALL RESIST SHEAR WALL UPLIFT WHILE COMPENSATING FOR THE SETTLEMENT, SHRINKAGE, AND COMPRESSION LOADING BY THE CONTINUAL DOWNWARD ACTUATION OF THE CINCH NUT. CINCH NUT BY ZONE FOUR (ICC ESR 2190) OR EQUIVALENT.
2. CINCH NUTS SHALL BE ATTACHED BY (2) 1/4" LAG SCREWS WITH MINIMUM WOOD PENETRTAION OF 1". LAG SCREWS ARE INSTALLED WITH MINIMAL TORQUE AGAINST THE CINCH NUT TOP SO AS NOT TO BEND THE CINCH NUT TOP.
3. PLATE WASHERS ARE ASTM A36 MATERIAL. PLATE WASHERS SHALL MAINTAIN TIGHT CONTACT AGAINST THE WOOD MEMBER.
4. COUPLER REDUCING NUTS MAY BE REQUIRED AT THE FOUNDATION OR FLOOR TO FLOOR CONNECTIONS.
5. REDUCING COUPLERS SHALL LAVE THE LARGER DIAMETER ROD FULLY SEATED FIRST, THEN TIGHTEN THE SMALLER ROD.
6. STANDARD COUPLERS SHALL CONFIRM TO ASTM ....
7. CONTRACTOR TO VERIFY COUPLERS ARE THREADED HALF WAY INTO COUPLER FROM EACH SIDE.
8. THREADED RODS INSTALLATION AT BOTTOM PLATE AND FLOOR FRAMING SHALL USE OVERSIZE HOLES PER DETAILS.
9. MAXIMUM OUT OF PLUMB FOR ROD IS 2" FOR EVERY 100' OF FLOOR HEIGHT.

PLATE WASHER SCHEDULE

PLATE WASHER MARK	WIDTH (IN)	LENGTH (IN)	THICKNESS (IN)	HOLE DIA (IN)
PW-5	3.00	3.000	0.250	1.3125
PW-6	3.25	3.375	0.375	1.3125
PW-7	3.25	3.875	0.500	1.3125
PW-9	3.25	5.000	0.625	1.3125
PW-11	3.25	5.875	0.750	1.3125
PW-15	3.25	5.875	0.750	1.3125
PW-20	3.25	10.250	1.250	1.3125
PW-25	3.50	11.750	1.500	1.3125
PW-30	3.50	14.00	1.750	1.3125
PW6-36	5.00	11.750	1.500	1.3125
PW6-43	5.00	14.00	1.750	1.3125

CINCH NUT SCHEDULE

CINCH NUT MARK	DEFLECTION AT ALLOWABLE LOAD (IN)	ALLOWABLE LOAD
CN-5	0.0187	10667
CN-6	0.0224	14048
CN-7	0.0234	21140
CN-8	0.0241	24626
CN-9	0.0233	33311
CN-10	0.0287	41874
CN-11	0.0268	45080
CN-11	0.0361	62126

1 TYPICAL CONTINUOUS TIE-DOWN SYSTEM DETAILS
1 1/2" = 1'-0"

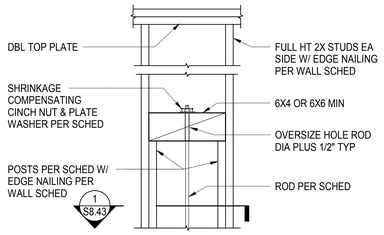

2 TYPICAL TIE-DOWN AT ROOF
NOT TO SCALE

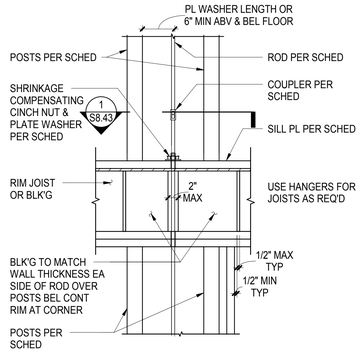

3 TYPICAL TIE-DOWN ROD AT WOOD FRAMED FLOOR
NOT TO SCALE

AXIS GFA

1130 WESTWOOD BLVD
LOS ANGELES, CA 90024
T 310.209.7520
F 310.209.7516
www.axisgfa.com

PROJECT NAME

Residence Inn® Marriott.

840 KILDARE STREET,
LANCASTER, CA

OWNER:

INSITE REAL STATE DEVELOPMENT
6265 VARIEL AVENUE
WOODLAND HILLS, CA 91367

Thornton Tomasetti
Thornton Tomasetti, Inc.
707 Wilshire Blvd, Suite 4450
Los Angeles, CA 90017-3618
T 213.330.7000 F 213.330.7001

Project Status

REGISTERED PROFESSIONAL ENGINEER
CHARLES QIAN TRC
No. S4416
Exp. 6/30/18
STRUCTURAL
STATE OF CALIFORNIA

NO.	DATE	ISSUES AND REVISIONS	BY
	10.13.17	DESIGN DEVELOPMENT	
	11.20.17	CD PROGRESS SET	
	12.18.17	PLAN CHECK	
	02.16.18	PLAN CHECK	

DATE

SCALE AS NOTED

PROJECT NUMBER

COMPUTER FILE S17081

PROJECT NAME

DESCRIPTION
TYPICAL WOOD SHEAR WALL DETAILS

SHEET NUMBER
S8.41

ALL DRAWINGS AND WRITTEN MATERIAL APPEARING HEREIN CONSTITUTE ORIGINAL AND UNPUBLISHED WORK OF THE ARCHITECT AND MAY NOT BE DUPLICATED, USED OR DISCLOSED WITHOUT WRITTEN CONSENT OF THE ARCHITECT

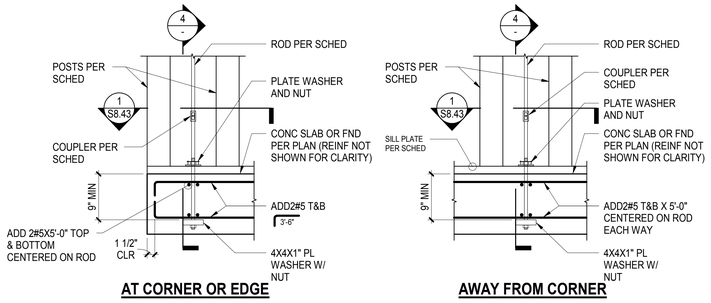

1 TYPICAL TIE-DOWN AT CONCRETE SLAB OR FOUNDATION

NOT TO SCALE

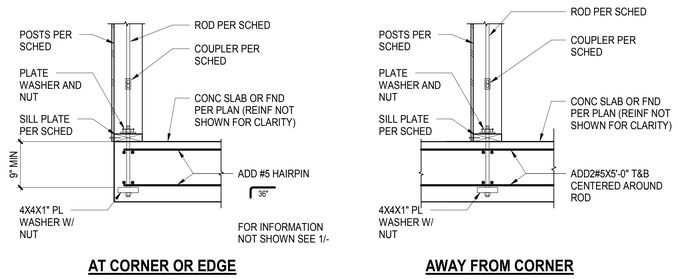

2 TYPICAL TIE-DOWN AT CONCRETE SLAB OR FOUNDATION

NOT TO SCALE

AXIS GFA

1130 WESTWOOD BLVD
LOS ANGELES, CA 90024
T 310.209.7520
F 310.209.7516
www.axisgfa.com

PROJECT NAME

Residence Inn® Marriott.

840 KILDARE STREET,
LANCASTER, CA

OWNER:

INSITE REAL STATE DEVELOPMENT
6265 VARIEL AVENUE
WOODLAND HILLS, CA 91367

Thornton Tomasetti
Thornton Tomasetti, Inc.
707 Wilshire Blvd, Suite 4450
Los Angeles, CA 90017-3618
T 213.330.7000 F 213.330.7001

Project Status

REGISTERED PROFESSIONAL ENGINEER
CHANDAN GANTRU DRAKER
No. S4416
Exp. 6/30/18
STRUCTURAL
STATE OF CALIFORNIA

NO.	DATE	ISSUES AND REVISIONS	BY
	10.13.17	DESIGN DEVELOPMENT	
	11.20.17	CD PROGRESS SET	
	12.18.17	PLAN CHECK	
	02.16.18	PLAN CHECK	

DATE

SCALE AS NOTED

PROJECT NUMBER

COMPUTER FILE **S17081**

PROJECT NAME

DESCRIPTION
TYPICAL WOOD SHEAR WALL DETAILS

SHEET NUMBER
S8.42

ALL DRAWINGS AND WRITTEN MATERIAL APPEARING HEREIN CONSTITUTE ORIGINAL AND UNPUBLISHED WORK OF THE ARCHITECT AND MAY NOT BE DUPLICATED, USED OR DISCLOSED WITHOUT WRITTEN CONSENT OF THE ARCHITECT

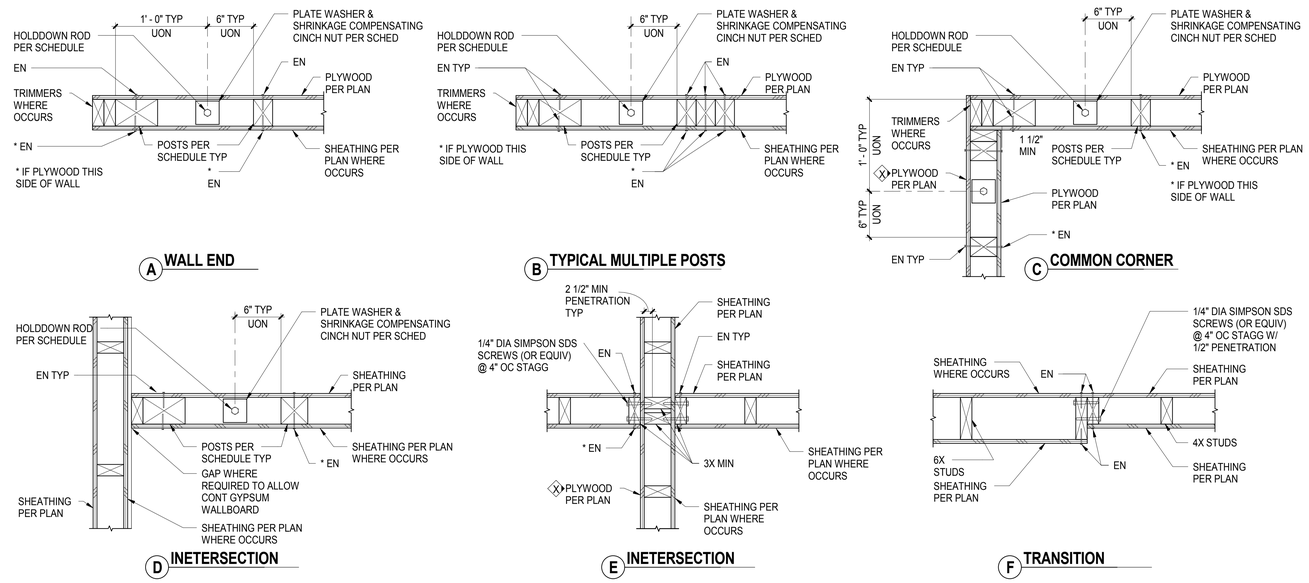

1 TYPICAL SHEARWALL ENDS, CORNERS & INTERSECTIONS2
NOT TO SCALE

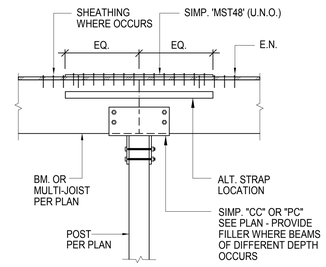

3 TYPICAL DRAG CONNECTION AT COLUMN
NOT TO SCALE

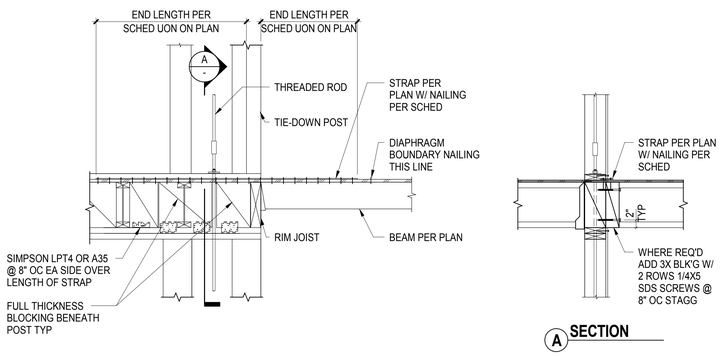

STRAP SCHEDULE			
STRAP	BLK'G. WHERE REQ.D	MIN. END LENGTH	MIN. NAILS EA. END
CMST12	4x	5'-6"	43-10d
CMST14	4x	4'-0"	33-10d
CMSTC16	4x	3'-0"	25-10d
CS14	3x	1'-8"	13-10d
CS16	3x	1'-4"	10-10d
MST60	3x	2'-3"	32-16d
MST48	3x	1'-9"	25-16d
MST27	3x	0'-11"	13-16d
LSTA24	3x	0'-9"	7-16d

NOTE:
NAILS ARE TO BE UNIFORMLY DISTRIBUTED OVER THE END LENGTH WITH A MAXIMUM SPACING OF 4" OC

4 TYPICAL DRAG CONNECTION
NOT TO SCALE

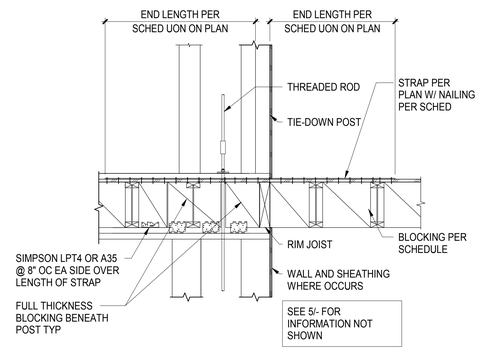

6 TYPICAL DRAG CONNECTION
3/4" = 1'-0"

AXIS GFA
1130 WESTWOOD BLVD
LOS ANGELES, CA 90024
T 310.209.7520
F 310.209.7516
www.axisgfa.com

PROJECT NAME

Residence Inn® Marriott.

840 KILDARE STREET,
LANCASTER, CA

OWNER:

INSITE REAL STATE DEVELOPMENT
6265 VARIEL AVENUE
WOODLAND HILLS, CA 91367

Thornton Tomasetti
Thornton Tomasetti, Inc.
707 Wilshire Blvd, Suite 4450
Los Angeles, CA 90017-3618
T 213.330.7000 F 213.330.7001

Project Status

REGISTERED PROFESSIONAL ENGINEER CHARLES QIAN (TE) SIGNATURE No. S4416 Exp. 6/30/18 STRUCTURAL STATE OF CALIFORNIA

NO.	DATE	ISSUES AND REVISIONS	BY
	10.13.17	DESIGN DEVELOPMENT	
	11.20.17	CD PROGRESS SET	
	12.18.17	PLAN CHECK	
	02.16.18	PLAN CHECK	

DATE

SCALE AS NOTED

PROJECT NUMBER

COMPUTER FILE S17081

PROJECT NAME

DESCRIPTION
TYPICAL WOOD SHEAR WALL DETAILS

SHEET NUMBER
S8.43

ALL DRAWINGS AND WRITTEN MATERIAL APPEARING HEREIN CONSTITUTE ORIGINAL AND UNPUBLISHED WORK OF THE ARCHITECT AND MAY NOT BE DUPLICATED, USED OR DISCLOSED WITHOUT WRITTEN CONSENT OF THE ARCHITECT

SHEAR WALL SCHEDULE LEVEL 2

WALL LABEL	LENGTH	SHEATHING EDGE NAILING (IN)	NO. OF SHEATHING LAYERS	PLATE WASHER	CINCH NUT	HOLDOWN ROD MATERIAL	HOLDOWN ROD SIZE	SIZE OF COMPRESSION POST ATA WALL END	SIZE OF COMPRESSION POST AWAY FROM END
2WX01	14' - 8"	2	1	PW-5	CN-10	A36	10	6x6	6x6
2WX02	5' - 11"	2	1	PW-5	CN-10	A36	10	6x6	6x6
2WX03	7' - 8"	2	1	PW-5	CN-10	A36	10	6x6	6x6
2WX04	7' - 4"	2	1	PW-5	CN-10	A36	10	6x6	6x6
2WX05	5' - 11"	2	1	PW-5	CN-10	A36	10	6x6	6x6
2WX06	6' - 5"	2	1	PW-5	CN-10	A36	10	6x6	6x6
2WX07	14' - 1"	2	1	PW-5	CN-10	A36	10	6x6	6x6
2WX08	23' - 10"	3	2	PW-5	CN-10	A36	10	8x6	6x6
2WX09	23' - 6"	3	2	PW-5	CN-10	A36	10	8x6	6x6
2WX10	9' - 4"	2	1	PW-5	CN-10	A36	10	6x6	6x6
2WX11	14' - 3"	2	1	PW-5	CN-10	A36	10	6x6	6x6
2WX12	18' - 9"	2	1	PW-5	CN-10	A36	10	6x6	6x6
2WX13	16' - 0"	2	1	PW-5	CN-10	A36	10	6x6	6x6
2WX14	27' - 2"	2	1	PW-5	CN-10	A36	10	6x6	6x6
2WX15	17' - 4"	2	1	PW-5	CN-10	A36	10	6x6	6x6
2WX16	8' - 11"	2	1	PW-5	CN-10	A36	10	6x6	6x6
2WX17	14' - 3"	2	1	PW-5	CN-10	A36	10	6x6	6x6
2WX18	18' - 9"	2	1	PW-5	CN-10	A36	10	6x6	6x6
2WX19	14' - 3"	2	1	PW-5	CN-10	A36	10	6x6	6x6
2WX20	8' - 11"	2	1	PW-5	CN-10	A36	10	6x6	6x6
2WX21	8' - 11"	2	1	PW-5	CN-10	A36	10	6x6	6x6
2WX22	14' - 3"	2	1	PW-5	CN-10	A36	10	6x6	6x6
2WX23	9' - 4"	2	1	PW-5	CN-10	A36	10	6x6	6x6
2WX24	25' - 11"	2	1	PW-5	CN-10	A36	10	6x6	6x6
2WX25	14' - 10"	2	1	PW-5	CN-10	A36	10	6x6	6x6
2WX26	8' - 7"	2	1	PW-5	CN-10	A36	10	6x6	6x6
2WX27	16' - 1"	2	1	PW-5	CN-10	A36	10	6x6	6x6
2WX28	10' - 0"	2	1	PW-5	CN-10	A36	10	6x6	6x6
2WX29	18' - 7"	2	1	PW-5	CN-10	A36	10	6x6	6x6
2WX30	17' - 8"	2	1	PW-5	CN-10	A36	10	6x6	6x6
2WX31	16' - 0"	2	1	PW-5	CN-10	A36	10	6x6	6x6
2WX32	32' - 9"	2	1	PW-5	CN-10	A36	10	6x6	6x6
2WX33	16' - 7"	2	1	PW-5	CN-10	A36	10	6x6	6x6
2WX34	9' - 3"	2	1	PW-5	CN-10	A36	10	6x6	6x6
2WX35	14' - 3"	2	1	PW-5	CN-10	A36	10	6x6	6x6
2WX36	9' - 4"	2	1	PW-5	CN-10	A36	10	6x6	6x6
2WX37	30' - 10"	2	1	PW-5	CN-10	A36	10	6x6	6x6
2WX38	23' - 10"	3	2	PW-5	CN-10	A36	10	8x6	6x6
2WX39	11' - 0"	2	1	PW-5	CN-10	A36	10	6x6	6x6
2WX40	5' - 9"	2	1	PW-5	CN-10	A36	10	6x6	6x6
2WX41	8' - 10"	2	1	PW-5	CN-10	A36	10	6x6	6x6
2WX42	8' - 6"	2	1	PW-5	CN-10	A36	10	6x6	6x6
2WX43	7' - 5"	2	1	PW-5	CN-10	A36	10	6x6	6x6
2WX44	14' - 4"	2	1	PW-5	CN-10	A36	10	6x6	6x6
2WX45	23' - 10"	3	2	PW-5	CN-10	A36	10	8x6	6x6
2WY01	4' - 10"	2	1	PW-5	CN-9	A36	9	6x6	6x6
2WY02	4' - 10"	2	1	PW-5	CN-9	A36	9	6x6	6x6
2WY03	10' - 4"	2	1	PW-5	CN-9	A36	9	6x6	6x6
2WY04	24' - 4"	2	1	PW-5	CN-10	A36	10	8x6	6x6
2WY05	29' - 5"	2	1	PW-5	CN-10	A36	10	8x6	6x6
2WY06	21' - 1"	2	1	PW-5	CN-10	A36	10	8x6	6x6
2WY07	24' - 11"	2	1	PW-5	CN-10	A36	10	8x6	6x6
2WY08	24' - 4"	2	1	PW-5	CN-10	A36	10	8x6	6x6
2WY09	19' - 3"	2	1	PW-5	CN-10	A36	10	8x6	6x6
2WY10	21' - 1"	2	1	PW-5	CN-10	A36	10	8x6	6x6
2WY11	14' - 3"	2	1	PW-5	CN-10	A36	10	8x6	6x6
2WY12	24' - 4"	2	1	PW-5	CN-10	A36	10	8x6	6x6
2WY13	29' - 5"	2	1	PW-5	CN-10	A36	10	8x6	6x6
2WY14	13' - 10"	2	1	PW-5	CN-10	A36	10	8x6	6x6
2WY15	17' - 2"	2	1	PW-5	CN-10	A36	10	8x6	6x6
2WY16	24' - 1"	2	1	PW-5	CN-8	A36	8	12x4	10x4
2WY17	29' - 9"	2	1	PW-5	CN-8	A36	8	12x4	10x4
2WY18	21' - 1"	2	1	PW-5	CN-10	A36	10	8x6	4x6
2WY19	24' - 11"	2	1	PW-5	CN-10	A36	10	8x6	6x6
2WY20	24' - 4"	2	1	PW-5	CN-10	A36	10	8x6	6x6
2WY21	29' - 9"	2	1	PW-5	CN-10	A36	10	8x6	6x6
2WY22	21' - 1"	2	1	PW-5	CN-10	A36	10	8x6	6x6
2WY23	13' - 10"	2	1	PW-5	CN-10	A36	10	8x6	6x6
2WY24	24' - 1"	2	1	PW-5	CN-8	A36	8	12x4	10x4
2WY25	24' - 4"	2	1	PW-5	CN-8	A36	8	12x4	10x4
2WY26	24' - 1"	2	1	PW-5	CN-8	A36	8	12x4	10x4
2WY27	24' - 3"	2	1	PW-5	CN-8	A36	8	12x4	10x4
2WY28	21' - 1"	2	1	PW-5	CN-10	A36	10	8x6	6x6
2WY29	21' - 1"	2	1	PW-5	CN-10	A36	10	8x6	6x6
2WY30	24' - 4"	2	1	PW-5	CN-10	A36	10	6x6	6x6
2WY31	24' - 3"	2	1	PW-5	CN-9	A36	9	6x6	6x6
2WY32	14' - 3"	2	1	PW-5	CN-9	A36	9	6x6	6x6
2WY33	10' - 0"	2	1	PW-5	CN-9	A36	9	6x6	6x6
2WY34	4' - 10"	2	1	PW-5	CN-9	A36	9	6x6	6x6
2WY35	4' - 10"	2	1	PW-5	CN-9	A36	9	6x6	6x6
2WY36	4' - 10"	2	1	PW-5	CN-9	A36	9	6x6	6x6
2WY37	15' - 1"	2	1	PW-5	CN-9	A36	9	6x6	6x6
2WY38	24' - 1"	2	1	PW-5	CN-8	A36	8	12x4	10x4
2WY39	29' - 9"	2	1	PW-5	CN-8	A36	8	12x4	10x4

SHEAR WALL SCHEDULE LEVEL 3

WALL LABEL	LENGTH	SHEATHING EDGE NAILING (IN)	NO. OF SHEATHING LAYERS	PLATE WASHER	CINCH NUT	HOLDOWN ROD MATERIAL	HOLDOWN ROD SIZE	SIZE OF COMPRESSION POST ATA WALL END	SIZE OF COMPRESSION POST AWAY FROM END
3WX01	14' - 8"	3	1	PW-5	CN-8	A36	8	4x6	4x6
3WX02	5' - 11"	3	1	PW-5	CN-8	A36	8	4x6	4x6
3WX03	7' - 8"	3	1	PW-5	CN-8	A36	8	4x6	4x6
3WX04	7' - 4"	3	1	PW-5	CN-8	A36	8	4x6	4x6
3WX05	5' - 11"	3	1	PW-5	CN-8	A36	8	4x6	4x6
3WX06	6' - 5"	3	1	PW-5	CN-8	A36	8	4x6	4x6
3WX07	13' - 7"	3	1	PW-5	CN-8	A36	8	4x6	4x6
3WX08	23' - 10"	2	1	PW-5	CN-8	A36	8	4x6	4x6
3WX09	23' - 7"	2	1	PW-5	CN-8	A36	8	4x6	4x6
3WX10	9' - 4"	2	1	PW-5	CN-8	A36	8	4x6	4x6
3WX11	14' - 3"	2	1	PW-5	CN-8	A36	8	4x6	4x6
3WX12	18' - 9"	2	1	PW-5	CN-8	A36	8	4x6	4x6
3WX13	16' - 0"	2	1	PW-5	CN-8	A36	8	4x6	4x6
3WX14	27' - 2"	2	1	PW-5	CN-8	A36	8	4x6	4x6
3WX15	17' - 4"	2	1	PW-5	CN-8	A36	8	4x6	4x6
3WX16	8' - 11"	2	1	PW-5	CN-8	A36	8	4x6	4x6
3WX17	14' - 3"	2	1	PW-5	CN-8	A36	8	4x6	4x6
3WX18	18' - 9"	2	1	PW-5	CN-8	A36	8	4x6	4x6
3WX19	14' - 3"	2	1	PW-5	CN-8	A36	8	4x6	4x6
3WX20	8' - 11"	2	1	PW-5	CN-8	A36	8	4x6	4x6
3WX21	8' - 11"	2	1	PW-5	CN-8	A36	8	4x6	4x6
3WX22	14' - 3"	2	1	PW-5	CN-8	A36	8	4x6	4x6
3WX23	9' - 4"	2	1	PW-5	CN-8	A36	8	4x6	4x6
3WX24	25' - 11"	2	1	PW-5	CN-8	A36	8	4x6	4x6
3WX25	14' - 9"	2	1	PW-5	CN-8	A36	8	4x6	4x6
3WX26	8' - 7"	2	1	PW-5	CN-8	A36	8	4x6	4x6
3WX27	16' - 1"	2	1	PW-5	CN-8	A36	8	4x6	4x6
3WX28	10' - 0"	2	1	PW-5	CN-8	A36	8	4x6	4x6
3WX29	19' - 0"	2	1	PW-5	CN-8	A36	8	4x6	4x6
3WX30	18' - 1"	2	1	PW-5	CN-8	A36	8	4x6	4x6
3WX31	16' - 0"	2	1	PW-5	CN-8	A36	8	4x6	4x6
3WX32	32' - 9"	2	1	PW-5	CN-8	A36	8	4x6	4x6
3WX33	17' - 0"	2	1	PW-5	CN-8	A36	8	4x6	4x6
3WX34	9' - 3"	2	1	PW-5	CN-8	A36	8	4x6	4x6
3WX35	14' - 6"	2	1	PW-5	CN-8	A36	8	4x6	4x6
3WX36	9' - 4"	2	1	PW-5	CN-8	A36	8	4x6	4x6
3WX37	30' - 10"	2	1	PW-5	CN-8	A36	8	4x6	4x6
3WX38	23' - 9"	2	1	PW-5	CN-8	A36	8	4x6	4x6
3WX39	11' - 0"	3	1	PW-5	CN-8	A36	8	4x6	4x6
3WX40	5' - 9"	3	1	PW-5	CN-8	A36	8	4x6	4x6
3WX41	8' - 10"	3	1	PW-5	CN-8	A36	8	4x6	4x6
3WX42	8' - 6"	3	1	PW-5	CN-8	A36	8	4x6	4x6
3WX43	7' - 5"	3	1	PW-5	CN-8	A36	8	4x6	4x6
3WX44	14' - 4"	3	1	PW-5	CN-8	A36	8	4x6	4x6
3WX45	23' - 10"	2	1	PW-5	CN-8	A36	8	4x6	4x6
3WY01	4' - 10"	3	1	PW-5	CN-7	A36	7	4x6	4x6
3WY02	4' - 10"	3	1	PW-5	CN-7	A36	7	4x6	4x6
3WY03	10' - 4"	3	1	PW-5	CN-7	A36	7	4x6	4x6
3WY04	24' - 4"	2	1	PW-5	CN-7	A36	7	6x6	4x6
3WY05	29' - 5"	2	1	PW-5	CN-7	A36	7	6x6	4x6
3WY06	21' - 1"	2	1	PW-5	CN-7	A36	7	6x6	4x6
3WY07	24' - 11"	2	1	PW-5	CN-7	A36	7	6x6	4x6
3WY08	24' - 4"	2	1	PW-5	CN-7	A36	7	6x6	4x6
3WY09	19' - 3"	2	1	PW-5	CN-7	A36	7	6x6	4x6
3WY10	21' - 1"	2	1	PW-5	CN-7	A36	7	6x6	4x6
3WY11	14' - 3"	2	1	PW-5	CN-7	A36	7	6x6	4x6
3WY12	24' - 4"	2	1	PW-5	CN-7	A36	7	6x6	4x6
3WY13	29' - 5"	2	1	PW-5	CN-7	A36	7	6x6	4x6
3WY14	13' - 10"	2	1	PW-5	CN-7	A36	7	6x6	4x6
3WY15	17' - 2"	2	1	PW-5	CN-7	A36	7	6x6	4x6
3WY16	24' - 1"	3	1	PW-5	CN-6	A36	6	8x4	6x4
3WY17	29' - 9"	3	1	PW-5	CN-6	A36	6	8x4	6x4
3WY18	21' - 1"	2	1	PW-5	CN-7	A36	7	6x6	4x6
3WY19	24' - 11"	2	1	PW-5	CN-7	A36	7	6x6	4x6
3WY20	24' - 4"	2	1	PW-5	CN-7	A36	7	6x6	4x6
3WY21	29' - 9"	2	1	PW-5	CN-7	A36	7	6x6	4x6
3WY22	21' - 1"	2	1	PW-5	CN-7	A36	7	6x6	4x6
3WY23	13' - 10"	2	1	PW-5	CN-7	A36	7	6x6	4x6
3WY24	24' - 1"	3	1	PW-5	CN-6	A36	6	8x4	8x4
3WY25	24' - 4"	3	1	PW-5	CN-6	A36	6	8x4	8x4
3WY26	24' - 1"	3	1	PW-5	CN-6	A36	6	8x4	8x4
3WY27	24' - 3"	3	1	PW-5	CN-6	A36	6	8x4	8x4
3WY28	21' - 1"	2	1	PW-5	CN-7	A36	7	6x6	4x6
3WY29	21' - 1"	2	1	PW-5	CN-7	A36	7	6x6	4x6
3WY30	24' - 4"	2	1	PW-5	CN-7	A36	7	6x6	4x6
3WY31	24' - 3"	2	1	PW-5	CN-7	A36	7	6x6	4x6
3WY32	14' - 3"	3	1	PW-5	CN-7	A36	7	4x6	4x6
3WY33	10' - 0"	3	1	PW-5	CN-7	A36	7	4x6	4x6
3WY34	4' - 10"	3	1	PW-5	CN-7	A36	7	4x6	4x6
3WY35	4' - 10"	3	1	PW-5	CN-7	A36	7	4x6	4x6
3WY36	4' - 10"	3	1	PW-5	CN-7	A36	7	4x6	4x6
3WY37	15' - 1"	3	1	PW-5	CN-7	A36	7	4x6	4x6
3WY38	24' - 1"	4	1	PW-5	CN-6	A36	6	8x4	6x4
3WY39	29' - 9"	3	1	PW-5	CN-6	A36	6	8x4	6x4

SHEAR WALL SCHEDULE LEVEL 4

WALL LABEL	LENGTH	SHEATHING EDGE NAILING (IN)	NO. OF SHEATHING LAYERS	PLATE WASHER	CINCH NUT	HOLDOWN ROD MATERIAL	HOLDOWN ROD SIZE	SIZE OF COMPRESSION POST ATA WALL END	SIZE OF COMPRESSION POST AWAY FROM END
4WX01	14' - 8"	4	1	PW-5	CN-6	A36	6	3x6	3x6
4WX02	5' - 11"	4	1	PW-5	CN-6	A36	6	3x6	3x6
4WX03	7' - 8"	4	1	PW-5	CN-6	A36	6	3x6	3x6
4WX04	7' - 4"	4	1	PW-5	CN-6	A36	6	3x6	3x6
4WX05	5' - 11"	4	1	PW-5	CN-6	A36	6	3x6	3x6
4WX06	6' - 5"	4	1	PW-5	CN-6	A36	6	3x6	3x6
4WX07	13' - 10"	4	1	PW-5	CN-6	A36	6	3x6	3x6
4WX08	23' - 10"	3	1	PW-5	CN-6	A36	6	3x6	3x6
4WX09	23' - 7"	3	1	PW-5	CN-6	A36	6	3x6	3x6
4WX10	9' - 4"	3	1	PW-5	CN-6	A36	6	3x6	3x6
4WX11	14' - 3"	3	1	PW-5	CN-6	A36	6	3x6	3x6
4WX12	18' - 9"	3	1	PW-5	CN-6	A36	6	3x6	3x6
4WX13	16' - 0"	3	1	PW-5	CN-6	A36	6	3x6	3x6
4WX14	27' - 2"	3	1	PW-5	CN-6	A36	6	3x6	3x6
4WX15	17' - 4"	3	1	PW-5	CN-6	A36	6	3x6	3x6
4WX16	8' - 11"	3	1	PW-5	CN-6	A36	6	3x6	3x6
4WX17	14' - 3"	3	1	PW-5	CN-6	A36	6	3x6	3x6
4WX18	18' - 9"	3	1	PW-5	CN-6	A36	6	3x6	3x6
4WX19	14' - 3"	3	1	PW-5	CN-6	A36	6	3x6	3x6
4WX20	8' - 11"	3	1	PW-5	CN-6	A36	6	3x6	3x6
4WX21	8' - 11"	3	1	PW-5	CN-6	A36	6	3x6	3x6
4WX22	14' - 3"	3	1	PW-5	CN-6	A36	6	3x6	3x6
4WX23	9' - 4"	3	1	PW-5	CN-6	A36	6	3x6	3x6
4WX24	25' - 11"	3	1	PW-5	CN-6	A36	6	3x6	3x6
4WX25	14' - 9"	3	1	PW-5	CN-6	A36	6	3x6	3x6
4WX26	8' - 7"	3	1	PW-5	CN-6	A36	6	3x6	3x6
4WX27	16' - 1"	3	1	PW-5	CN-6	A36	6	3x6	3x6
4WX28	10' - 6"	3	1	PW-5	CN-6	A36	6	3x6	3x6
4WX29	19' - 6"	3	1	PW-5	CN-6	A36	6	3x6	3x6
4WX30	18' - 1"	3	1	PW-5	CN-6	A36	6	3x6	3x6
4WX31	16' - 0"	3	1	PW-5	CN-6	A36	6	3x6	3x6
4WX32	32' - 9"	3	1	PW-5	CN-6	A36	6	3x6	3x6
4WX33	17' - 0"	3	1	PW-5	CN-6	A36	6	3x6	3x6
4WX34	9' - 3"	3	1	PW-5	CN-6	A36	6	3x6	3x6
4WX35	14' - 6"	3	1	PW-5	CN-6	A36	6	3x6	3x6
4WX36	9' - 4"	3	1	PW-5	CN-6	A36	6	3x6	3x6
4WX37	30' - 10"	3	1	PW-5	CN-6	A36	6	3x6	3x6
4WX38	23' - 10"	3	1	PW-5	CN-6	A36	6	3x6	3x6
4WX39	11' - 0"	4	1	PW-5	CN-6	A36	6	3x6	3x6
4WX40	5' - 9"	4	1	PW-5	CN-6	A36	6	3x6	3x6
4WX41	8' - 10"	4	1	PW-5	CN-6	A36	6	3x6	3x6
4WX42	8' - 6"	4	1	PW-5	CN-6	A36	6	3x6	3x6
4WX43	7' - 5"	4	1	PW-5	CN-6	A36	6	3x6	3x6
4WX44	14' - 4"	4	1	PW-5	CN-6	A36	6	3x6	3x6
4WX45	23' - 10"	3	1	PW-5	CN-6	A36	6	3x6	3x6
4WY01	4' - 10"	4	1	PW-5	CN-6	A36	6	3x6	3x6
4WY02	4' - 10"	4	1	PW-5	CN-6	A36	6	3x6	3x6
4WY03	10' - 4"	4	1	PW-5	CN-6	A36	6	3x6	3x6
4WY04	24' - 4"	3	1	PW-5	CN-6	A36	6	3x6	3x6
4WY05	29' - 5"	3	1	PW-5	CN-6	A36	6	3x6	3x6
4WY06	21' - 1"	3	1	PW-5	CN-6	A36	6	3x6	3x6
4WY07	24' - 11"	3	1	PW-5	CN-6	A36	6	3x6	3x6
4WY08	24' - 4"	3	1	PW-5	CN-6	A36	6	3x6	3x6
4WY09	19' - 3"	3	1	PW-5	CN-6	A36	6	3x6	3x6
4WY10	20' - 10"	3	1	PW-5	CN-6	A36	6	3x6	3x6
4WY11	14' - 3"	3	1	PW-5	CN-6	A36	6	3x6	3x6
4WY12	24' - 4"	3	1	PW-5	CN-6	A36	6	3x6	3x6
4WY13	29' - 5"	3	1	PW-5	CN-6	A36	6	3x6	3x6
4WY14	13' - 10"	3	1	PW-5	CN-6	A36	6	3x6	3x6
4WY15	17' - 2"	3	1	PW-5	CN-6	A36	6	3x6	3x6
4WY16	24' - 1"	4	1	PW-5	CN-5	A36	5	4x4	4x4
4WY17	29' - 9"	4	1	PW-5	CN-5	A36	5	4x4	4x4
4WY18	21' - 1"	3	1	PW-5	CN-6	A36	6	3x6	3x6
4WY19	24' - 11"	3	1	PW-5	CN-6	A36	6	3x6	3x6
4WY20	24' - 4"	3	1	PW-5	CN-6	A36	6	3x6	3x6
4WY21	29' - 9"	3	1	PW-5	CN-6	A36	6	3x6	3x6
4WY22	21' - 1"	3	1	PW-5	CN-6	A36	6	3x6	3x6
4WY23	13' - 10"	3	1	PW-5	CN-6	A36	6	3x6	3x6
4WY24	24' - 1"	4	1	PW-5	CN-5	A36	5	4x4	4x4
4WY25	24' - 4"	4	1	PW-5	CN-5	A36	5	4x4	4x4
4WY26	24' - 1"	4	1	PW-5	CN-5	A36	5	4x4	4x4
4WY27	24' - 3"	4	1	PW-5	CN-5	A36	5	4x4	4x4
4WY28	21' - 1"	3	1	PW-5	CN-6	A36	6	3x6	3x6
4WY29	21' - 1"	3	1	PW-5	CN-6	A36	6	3x6	3x6
4WY30	24' - 4"	3	1	PW-5	CN-6	A36	6	3x6	3x6
4WY31	24' - 3"	3	1	PW-5	CN-6	A36	6	3x6	3x6
4WY32	14' - 3"	4	1	PW-5	CN-6	A36	6	3x6	3x6
4WY33	10' - 0"	4	1	PW-5	CN-6	A36	6	3x6	3x6
4WY34	5' - 0"	4	1	PW-5	CN-6	A36	6	3x6	3x6
4WY35	4' - 10"	4	1	PW-5	CN-6	A36	6	3x6	3x6
4WY36	4' - 10"	4	1	PW-5	CN-6	A36	6	3x6	3x6
4WY37	15' - 1"	4	1	PW-5	CN-6	A36	6	3x6	3x6
4WY38	24' - 1"	4	1	PW-5	CN-5	A36	5	4x4	4x4
4WY39	29' - 9"	4	1	PW-5	CN-5	A36	5	4x4	4x4

AXIS GFA

1130 WESTWOOD BLVD
LOS ANGELES, CA 90024
T 310.209.7520
F 310.209.7516
www.axisgfa.com

PROJECT NAME

Residence Inn® Marriott.

840 KILDARE STREET,
LANCASTER, CA

OWNER:

INSITE REAL STATE
DEVELOPMENT
6265 VARIEL AVENUE
WOODLAND HILLS, CA 91367

Thornton Tomasetti

Thornton Tomasetti, Inc.
707 Wilshire Blvd, Suite 4450
Los Angeles, CA 90017-3618
T 213.330.7000 F 213.330.7001

Project Status

REGISTERED PROFESSIONAL ENGINEER
CHRISTOPHER GANTRU TAYLOR
No. S4416
Exp. 6/30/18
STRUCTURAL
STATE OF CALIFORNIA

NO.	DATE	ISSUES AND REVISIONS	BY
	10.13.17	DESIGN DEVELOPMENT	
	11.20.17	CD PROGRESS SET	
	12.18.17	PLAN CHECK	
	02.16.18	PLAN CHECK	

DATE

SCALE AS NOTED

PROJECT NUMBER

COMPUTER FILE S17081

PROJECT NAME

DESCRIPTION
WOOD SHEAR WALL SCHEDULE

SHEET NUMBER
S8.44

ALL DRAWINGS AND WRITTEN MATERIAL APPEARING HEREIN CONSTITUTE ORIGINAL AND UNPUBLISHED WORK OF THE ARCHITECT AND MAY NOT BE DUPLICATED, USED OR DISCLOSED WITHOUT WRITTEN CONSENT OF THE ARCHITECT

SHEAR WALL SCHEDULE LEVEL 5

WALL LABEL	LENGTH	SHEATHING EDGE NAILING (IN)	NO. OF SHEATHING LAYERS	PLATE WASHER	CINCH NUT	HOLDOWN ROD MATERIAL	HOLDOWN ROD SIZE	SIZE OF COMPRESSION POST ATA WALL END	SIZE OF COMPRESSION POST AWAY FROM END
5WX01	14' - 8"	6	1	PW-5	CN-5	A36	5	2x6	2x6
5WX02	5' - 11"	6	1	PW-5	CN-5	A36	5	2x6	2x6
5WX03	7' - 8"	6	1	PW-5	CN-5	A36	5	2x6	2x6
5WX04	7' - 4"	6	1	PW-5	CN-5	A36	5	2x6	2x6
5WX05	5' - 11"	6	1	PW-5	CN-5	A36	5	2x6	2x6
5WX06	6' - 5"	6	1	PW-5	CN-5	A36	5	2x6	2x6
5WX07	13' - 10"	6	1	PW-5	CN-5	A36	5	2x6	2x6
5WX08	23' - 10"	6	1	PW-5	CN-5	A36	5	2x6	2x6
5WX09	23' - 7"	6	1	PW-5	CN-5	A36	5	2x6	2x6
5WX10	9' - 4"	6	1	PW-5	CN-5	A36	5	2x6	2x6
5WX11	14' - 3"	6	1	PW-5	CN-5	A36	5	2x6	2x6
5WX12	18' - 9"	6	1	PW-5	CN-5	A36	5	2x6	2x6
5WX13	16' - 0"	6	1	PW-5	CN-5	A36	5	2x6	2x6
5WX14	27' - 2"	6	1	PW-5	CN-5	A36	5	2x6	2x6
5WX15	17' - 4"	6	1	PW-5	CN-5	A36	5	2x6	2x6
5WX16	8' - 11"	6	1	PW-5	CN-5	A36	5	2x6	2x6
5WX17	14' - 3"	6	1	PW-5	CN-5	A36	5	2x6	2x6
5WX18	18' - 9"	6	1	PW-5	CN-5	A36	5	2x6	2x6
5WX19	14' - 3"	6	1	PW-5	CN-5	A36	5	2x6	2x6
5WX20	8' - 11"	6	1	PW-5	CN-5	A36	5	2x6	2x6
5WX21	8' - 11"	6	1	PW-5	CN-5	A36	5	2x6	2x6
5WX22	14' - 3"	6	1	PW-5	CN-5	A36	5	2x6	2x6
5WX23	9' - 4"	6	1	PW-5	CN-5	A36	5	2x6	2x6
5WX24	25' - 11"	6	1	PW-5	CN-5	A36	5	2x6	2x6
5WX25	14' - 9"	6	1	PW-5	CN-5	A36	5	2x6	2x6
5WX26	8' - 7"	6	1	PW-5	CN-5	A36	5	2x6	2x6
5WX27	16' - 1"	6	1	PW-5	CN-5	A36	5	2x6	2x6
5WX28	10' - 6"	6	1	PW-5	CN-5	A36	5	2x6	2x6
5WX29	19' - 6"	6	1	PW-5	CN-5	A36	5	2x6	2x6
5WX30	18' - 1"	6	1	PW-5	CN-5	A36	5	2x6	2x6
5WX31	16' - 0"	6	1	PW-5	CN-5	A36	5	2x6	2x6
5WX32	32' - 9"	6	1	PW-5	CN-5	A36	5	2x6	2x6
5WX33	17' - 0"	6	1	PW-5	CN-5	A36	5	2x6	2x6
5WX34	9' - 3"	6	1	PW-5	CN-5	A36	5	2x6	2x6
5WX35	14' - 6"	6	1	PW-5	CN-5	A36	5	2x6	2x6
5WX36	9' - 4"	6	1	PW-5	CN-5	A36	5	2x6	2x6
5WX37	30' - 10"	6	1	PW-5	CN-5	A36	5	2x6	2x6
5WX38	23' - 9"	6	1	PW-5	CN-5	A36	5	2x6	2x6
5WX39	11' - 0"	6	1	PW-5	CN-5	A36	5	2x6	2x6
5WX40	5' - 9"	6	1	PW-5	CN-5	A36	5	2x6	2x6
5WX41	8' - 10"	6	1	PW-5	CN-5	A36	5	2x6	2x6
5WX42	8' - 6"	6	1	PW-5	CN-5	A36	5	2x6	2x6
5WX43	7' - 5"	6	1	PW-5	CN-5	A36	5	2x6	2x6
5WX44	14' - 4"	6	1	PW-5	CN-5	A36	5	2x6	2x6
5WX45	23' - 10"	6	1	PW-5	CN-5	A36	5	2x6	2x6
5WY01	4' - 10"	6	1	PW-5	CN-5	A36	5	2x6	2x6
5WY02	4' - 10"	6	1	PW-5	CN-5	A36	5	2x6	2x6
5WY03	10' - 4"	6	1	PW-5	CN-5	A36	5	2x6	2x6
5WY04	24' - 4"	6	1	PW-5	CN-5	A36	5	2x6	2x6
5WY05	29' - 5"	6	1	PW-5	CN-5	A36	5	2x6	2x6
5WY06	21' - 1"	6	1	PW-5	CN-5	A36	5	2x6	2x6
5WY07	24' - 11"	6	1	PW-5	CN-5	A36	5	2x6	2x6
5WY08	24' - 4"	6	1	PW-5	CN-5	A36	5	2x6	2x6
5WY09	19' - 3"	6	1	PW-5	CN-5	A36	5	2x6	2x6
5WY10	20' - 10"	6	1	PW-5	CN-5	A36	5	2x6	2x6
5WY11	14' - 3"	6	1	PW-5	CN-5	A36	5	2x6	2x6
5WY12	24' - 4"	6	1	PW-5	CN-5	A36	5	2x6	2x6
5WY13	29' - 5"	6	1	PW-5	CN-5	A36	5	2x6	2x6
5WY14	13' - 10"	6	1	PW-5	CN-5	A36	5	2x6	2x6
5WY15	17' - 2"	6	1	PW-5	CN-5	A36	5	2x6	2x6
5WY16	24' - 1"	6	1	PW-5	CN-5	A36	5	3x4	3x4
5WY17	29' - 9"	6	1	PW-5	CN-5	A36	5	3x4	3x4
5WY18	21' - 1"	6	1	PW-5	CN-5	A36	5	2x6	2x6
5WY19	24' - 11"	6	1	PW-5	CN-5	A36	5	2x6	2x6
5WY20	24' - 4"	6	1	PW-5	CN-5	A36	5	2x6	2x6
5WY21	29' - 9"	6	1	PW-5	CN-5	A36	5	2x6	2x6
5WY22	21' - 1"	6	1	PW-5	CN-5	A36	5	2x6	2x6
5WY23	13' - 10"	6	1	PW-5	CN-5	A36	5	2x6	2x6
5WY24	24' - 1"	6	1	PW-5	CN-5	A36	5	3x4	3x4
5WY25	24' - 4"	6	1	PW-5	CN-5	A36	5	3x4	3x4
5WY26	24' - 1"	6	1	PW-5	CN-5	A36	5	3x4	3x4
5WY27	24' - 3"	6	1	PW-5	CN-5	A36	5	3x4	3x4
5WY28	21' - 1"	6	1	PW-5	CN-5	A36	5	2x6	2x6
5WY29	21' - 1"	6	1	PW-5	CN-5	A36	5	2x6	2x6
5WY30	24' - 4"	6	1	PW-5	CN-5	A36	5	2x6	2x6
5WY31	24' - 3"	6	1	PW-5	CN-5	A36	5	2x6	2x6
5WY32	14' - 3"	6	1	PW-5	CN-5	A36	5	2x6	2x6
5WY33	10' - 0"	6	1	PW-5	CN-5	A36	5	2x6	2x6
5WY34	5' - 0"	6	1	PW-5	CN-5	A36	5	2x6	2x6
5WY35	4' - 10"	6	1	PW-5	CN-5	A36	5	2x6	2x6
5WY36	4' - 10"	6	1	PW-5	CN-5	A36	5	2x6	2x6
5WY37	15' - 1"	6	1	PW-5	CN-5	A36	5	2x6	2x6
5WY38	24' - 1"	6	1	PW-5	CN-5	A36	5	3x4	3x4
5WY39	29' - 9"	6	1	PW-5	CN-5	A36	5	3x4	3x4

AXIS GFA

1130 WESTWOOD BLVD
LOS ANGELES, CA 90024
T 310.209.7520
F 310.209.7516
www.axisgfa.com

PROJECT NAME

Residence Inn® Marriott.

840 KILDARE STREET,
LANCASTER, CA

OWNER:

INSITE REAL STATE
DEVELOPMENT
6265 VARIEL AVENUE
WOODLAND HILLS, CA 91367

Thornton Tomasetti

Thornton Tomasetti, Inc.
707 Wilshire Blvd, Suite 4450
Los Angeles, CA 90017-3618
T 213.330.7000 F 213.330.7001

Project Status

REGISTERED PROFESSIONAL ENGINEER
CONRADO GANTRIO TAMBERG
No. S4416
Exp. 6/30/18
STRUCTURAL
STATE OF CALIFORNIA

NO.	DATE	ISSUES AND REVISIONS	BY
	10.13.17	DESIGN DEVELOPMENT	
	11.20.17	CD PROGRESS SET	
	12.18.17	PLAN CHECK	
	02.16.18	PLAN CHECK	

DATE

SCALE AS NOTED

PROJECT NUMBER

COMPUTER FILE **S17081**

PROJECT NAME

DESCRIPTION
WOOD SHEAR WALL SCHEDULE

SHEET NUMBER
S8.45

ALL DRAWINGS AND WRITTEN MATERIAL APPEARING HEREIN CONSTITUTE ORIGINAL AND UNPUBLISHED WORK OF THE ARCHITECT AND MAY NOT BE DUPLICATED, USED OR DISCLOSED WITHOUT WRITTEN CONSENT OF THE ARCHITECT

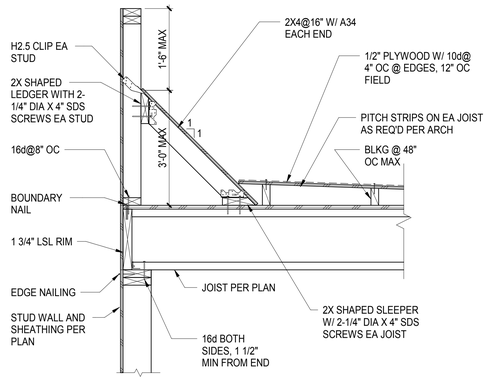

PERPENDICULAR

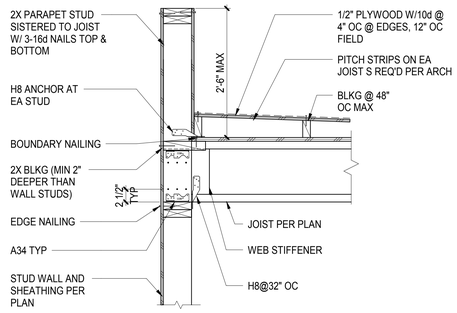

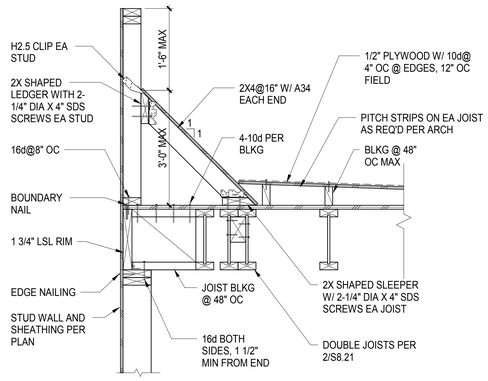

PARALLEL

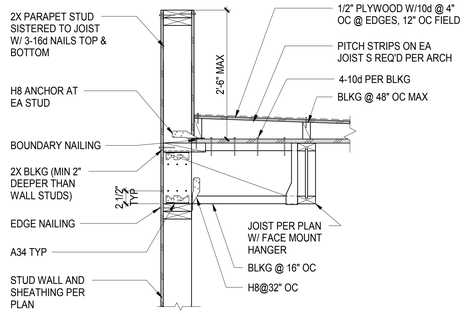

1 TYPICAL ROOF I-JOIST ON EXTERIOR WALL

NOT TO SCALE

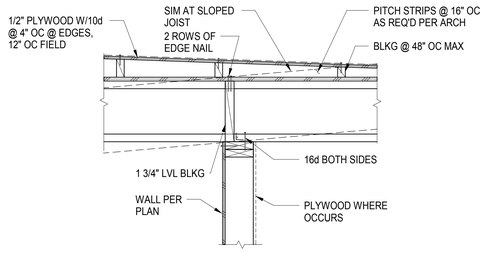

PERPENDICULAR

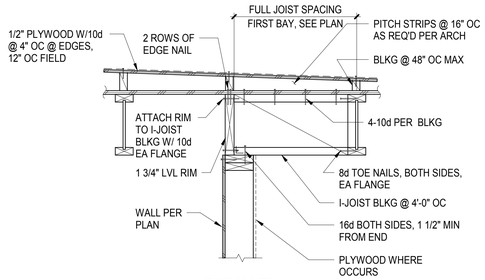

PARALLEL

3 TYPICAL ROOF I-JOIST ON INTERIOR WALL

NOT TO SCALE

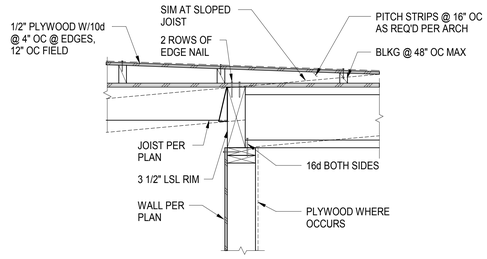

PERPENDICULAR

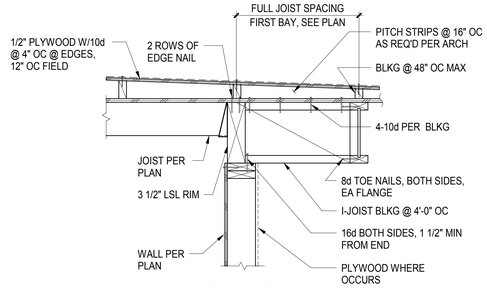

PARALLEL

5 TYPICAL ROOF I-JOIST ON CORRIDOR WALL

NOT TO SCALE

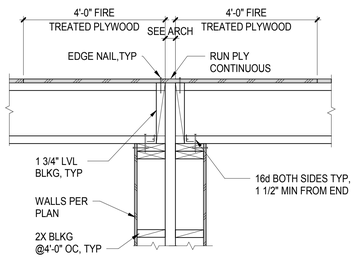

PERPENDICULAR

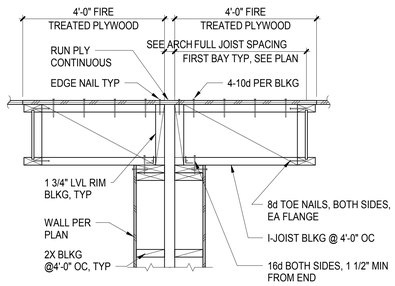

PARALLEL

7 TYPICAL ROOF I-JOIST ON FIRE WALL

NOT TO SCALE

AXIS GFA

1130 WESTWOOD BLVD
LOS ANGELES, CA 90024
T 310.209.7520
F 310.209.7516
www.axisgfa.com

PROJECT NAME

Residence Inn® Marriott.

840 KILDARE STREET,
LANCASTER, CA

OWNER:

INSITE REAL STATE DEVELOPMENT
6265 VARIEL AVENUE
WOODLAND HILLS, CA 91367

Thornton Tomasetti

Thornton Tomasetti, Inc.
707 Wilshire Blvd, Suite 4450
Los Angeles, CA 90017-3618
T 213.330.7000 F 213.330.7001

Project Status

REGISTERED PROFESSIONAL ENGINEER
CHANDAN GANTRI, GRADUATE
No. S4416
Exp. 6/30/18
STRUCTURAL
STATE OF CALIFORNIA

NO.	DATE	ISSUES AND REVISIONS	BY
	10.13.17	DESIGN DEVELOPMENT	
	11.20.17	CD PROGRESS SET	
	12.18.17	PLAN CHECK	
	02.16.18	PLAN CHECK	

DATE

SCALE AS NOTED

PROJECT NUMBER

COMPUTER FILE S17081

PROJECT NAME

DESCRIPTION
TYPICAL WOOD DETAILS

SHEET NUMBER
S8.50

ALL DRAWINGS AND WRITTEN MATERIAL APPEARING HEREIN CONSTITUTE ORIGINAL AND UNPUBLISHED WORK OF THE ARCHITECT AND MAY NOT BE DUPLICATED, USED OR DISCLOSED WITHOUT WRITTEN CONSENT OF THE ARCHITECT

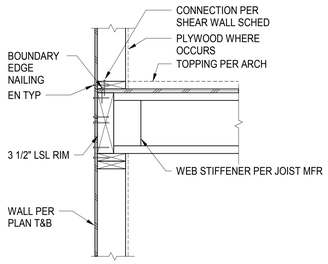

B PERPENDICULAR

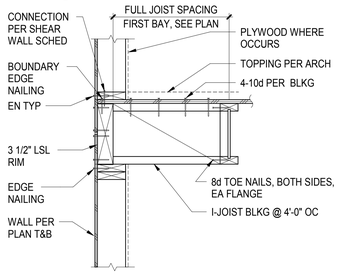

A PARALLEL

1 TYPICAL FLOOR I-JOIST ON EXTERIOR WALL
NOT TO SCALE

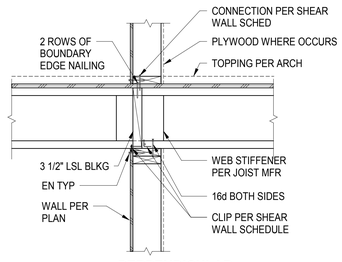

B PERPENDICULAR

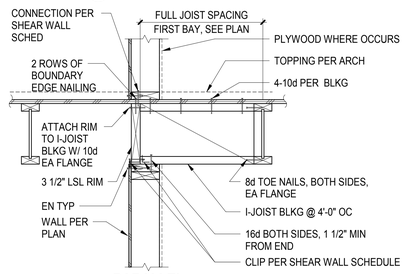

A PARALLEL

2 TYPICAL FLOOR I-JOIST ON INTERIOR WALL
NOT TO SCALE

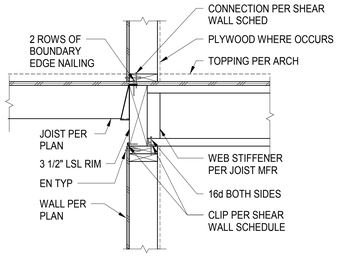

B PERPENDICULAR

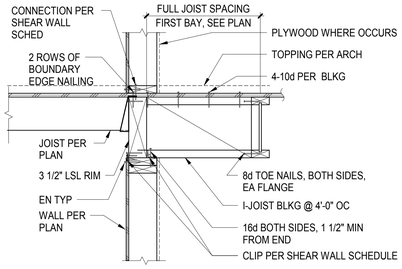

A PARALLEL

3 TYPICAL FLOOR I-JOIST ON CORRIDOR WALL2
1" = 1'-0"

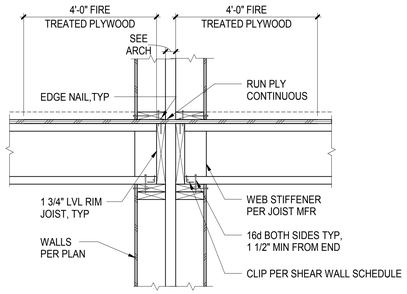

B PERPENDICULAR

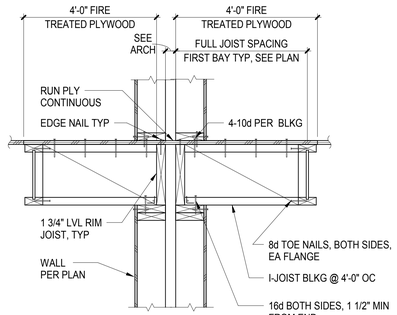

A PARALLEL

4 TYPICAL FLOOR I-JOIST ON FIRE WALL
NOT TO SCALE

AXIS GFA
1130 WESTWOOD BLVD
LOS ANGELES, CA 90024
T 310.209.7520
F 310.209.7516
www.axisgfa.com

PROJECT NAME

Residence Inn® Marriott.

840 KILDARE STREET,
LANCASTER, CA

OWNER:

INSITE REAL STATE DEVELOPMENT
6265 VARIEL AVENUE
WOODLAND HILLS, CA 91367

Thornton Tomasetti
Thornton Tomasetti, Inc.
707 Wilshire Blvd, Suite 4450
Los Angeles, CA 90017-3618
T 213.330.7000 F 213.330.7001

Project Status

REGISTERED PROFESSIONAL ENGINEER
CHANDAN GANTRU DRAKER
No. S4416
Exp. 6/30/18
STRUCTURAL
STATE OF CALIFORNIA

NO.	DATE	ISSUES AND REVISIONS	BY
	10.13.17	DESIGN DEVELOPMENT	
	11.20.17	CD PROGRESS SET	
	12.18.17	PLAN CHECK	
	02.16.18	PLAN CHECK	

DATE

SCALE AS NOTED

PROJECT NUMBER

COMPUTER FILE S17081

PROJECT NAME

DESCRIPTION
TYPICAL WOOD DETAILS

SHEET NUMBER
S8.51

ALL DRAWINGS AND WRITTEN MATERIAL APPEARING HEREIN CONSTITUTE ORIGINAL AND UNPUBLISHED WORK OF THE ARCHITECT AND MAY NOT BE DUPLICATED, USED OR DISCLOSED WITHOUT WRITTEN CONSENT OF THE ARCHITECT

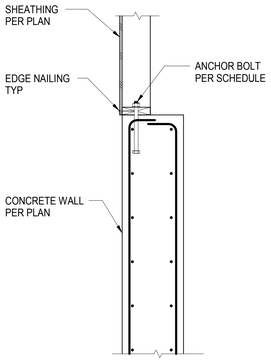

1 SECTION
1" = 1'-0"

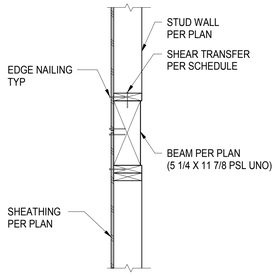

2 SECTION
1" = 1'-0"

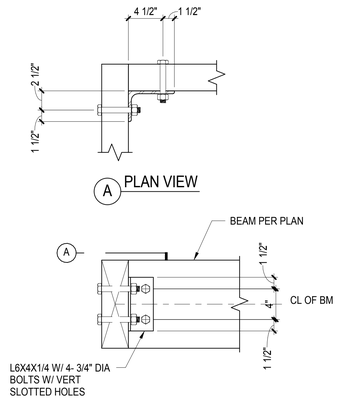

3 SECTION
1 1/2" = 1'-0"

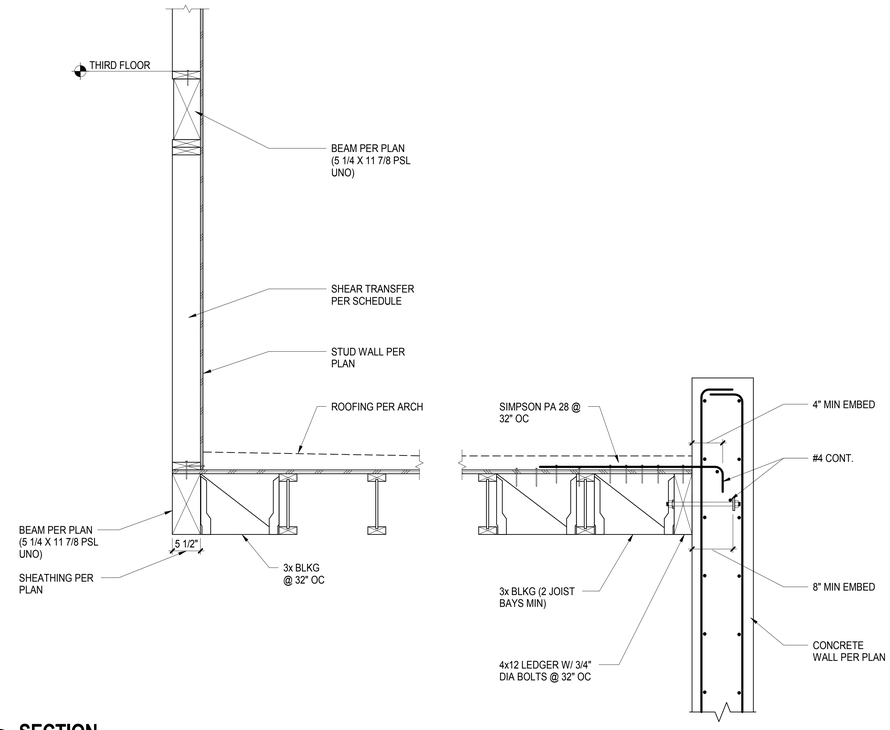

4 SECTION
1" = 1'-0"

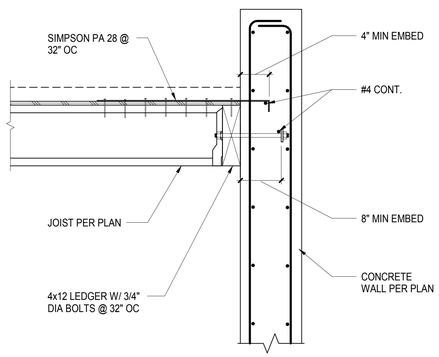

5 SECTION
1" = 1'-0"

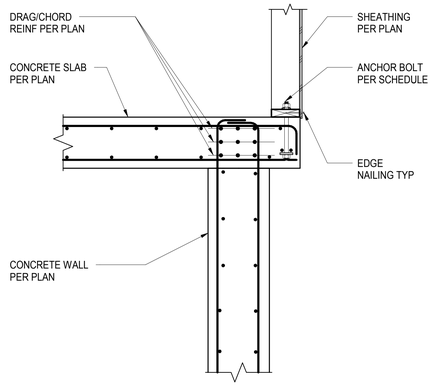

6 SECTION
1" = 1'-0"

AXIS GFA
1130 WESTWOOD BLVD
LOS ANGELES, CA 90024
T 310.209.7520
F 310.209.7516
www.axisgfa.com

PROJECT NAME

Residence Inn® Marriott.

840 KILDARE STREET,
LANCASTER, CA

OWNER:

INSITE REAL STATE
DEVELOPMENT
6265 VARIEL AVENUE
WOODLAND HILLS, CA 91367

Thornton Tomasetti
Thornton Tomasetti, Inc.
707 Wilshire Blvd, Suite 4450
Los Angeles, CA 90017-3618
T 213.330.7000 F 213.330.7001

Project Status

REGISTERED PROFESSIONAL ENGINEER
CHARLES GANIRU TAWASHI
No. S4416
Exp. 6/30/18
STRUCTURAL
STATE OF CALIFORNIA

NO.	DATE	ISSUES AND REVISIONS	BY
	10.13.17	DESIGN DEVELOPMENT	
	11.20.17	CD PROGRESS SET	
	12.18.17	PLAN CHECK	
	02.16.18	PLAN CHECK	

DATE

SCALE AS NOTED

PROJECT NUMBER

COMPUTER FILE **S17081**

PROJECT NAME

DESCRIPTION
WOOD DETAILS

SHEET NUMBER
S8.60

ALL DRAWINGS AND WRITTEN MATERIAL APPEARING HEREIN CONSTITUTE ORIGINAL AND UNPUBLISHED WORK OF THE ARCHITECT AND MAY NOT BE DUPLICATED, USED OR DISCLOSED WITHOUT WRITTEN CONSENT OF THE ARCHITECT

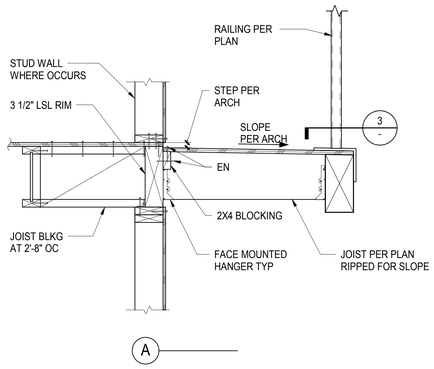

1 SECTION
1" = 1'-0"

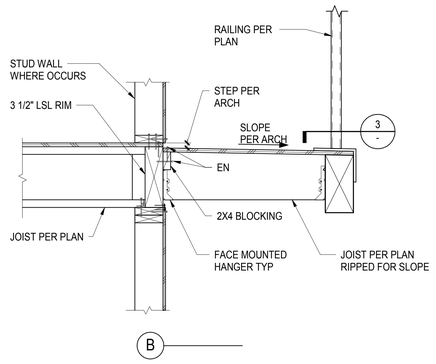

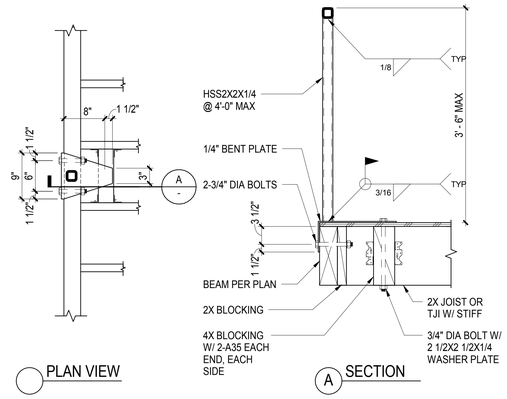

3 HANDRAIL SUPPORT DETAIL AT PERPERDICULAR JOIST
1" = 1'-0"

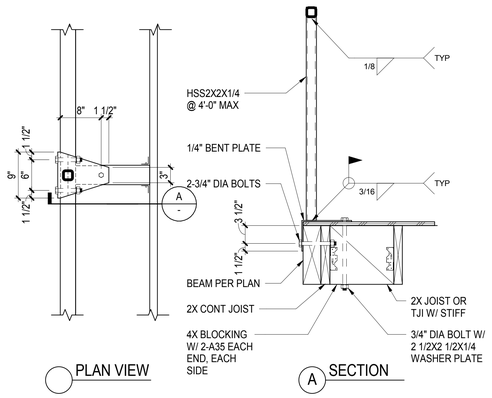

4 HANDRAIL SUPPPORT DETAIL AT PARALLEL JOIST
1" = 1'-0"

AXIS GFA
1130 WESTWOOD BLVD
LOS ANGELES, CA 90024
T 310.209.7520
F 310.209.7516
www.axisgfa.com

PROJECT NAME

Residence Inn® Marriott.

840 KILDARE STREET,
LANCASTER, CA

OWNER:

INSITE REAL STATE DEVELOPMENT
6265 VARIEL AVENUE
WOODLAND HILLS, CA 91367

Thornton Tomasetti
Thornton Tomasetti, Inc.
707 Wilshire Blvd, Suite 4450
Los Angeles, CA 90017-3618
T 213.330.7000 F 213.330.7001

Project Status

REGISTERED PROFESSIONAL ENGINEER
CHANDAN GANTRU DRAKER
No. S4416
Exp. 6/30/18
STRUCTURAL
STATE OF CALIFORNIA

NO.	DATE	ISSUES AND REVISIONS	BY
	10.13.17	DESIGN DEVELOPMENT	
	11.20.17	CD PROGRESS SET	
	12.18.17	PLAN CHECK	
	02.16.18	PLAN CHECK	

DATE

SCALE AS NOTED

PROJECT NUMBER

COMPUTER FILE S17081

PROJECT NAME

DESCRIPTION
WOOD DETAILS

SHEET NUMBER
S8.61

ALL DRAWINGS AND WRITTEN MATERIAL APPEARING HEREIN CONSTITUTE ORIGINAL AND UNPUBLISHED WORK OF THE ARCHITECT AND MAY NOT BE DUPLICATED, USED OR DISCLOSED WITHOUT WRITTEN CONSENT OF THE ARCHITECT

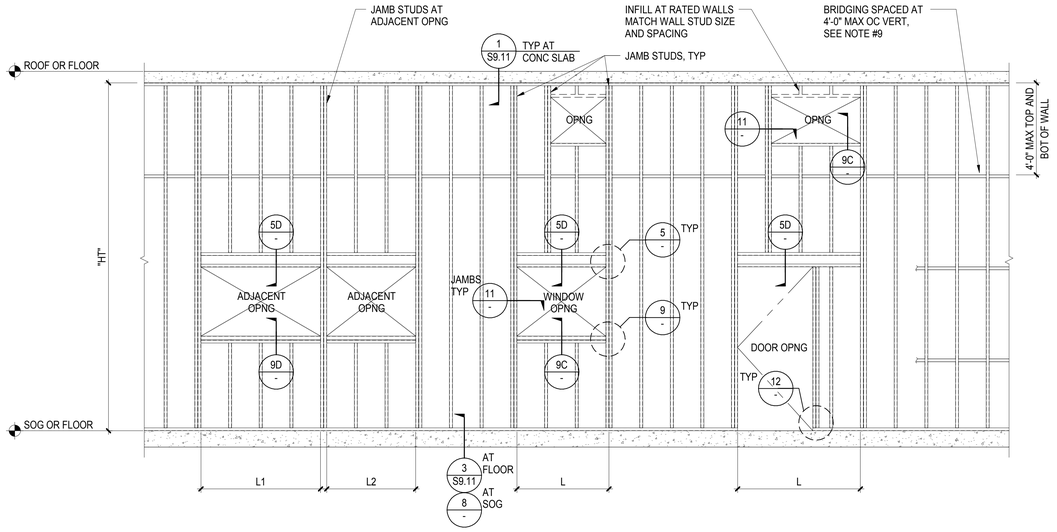

1. PROVIDE STUDS, TRACKS AND BRACING PER SCHEDULE BELOW:

METAL STUD SCHEDULE

REF: STEEL STUD MANUFACTURER'S ASSOCIATION (ESR-3064P)

MAX. WALL HEIGHT "H"	NOMINAL STUD SIZE	SSMA PRODUCT IDENTIFICATION	STUD SPACING	MINIMUM PROPERTIES Ix in^4	Sx in^3	Ma in-k
STUDS						
15'-0"	6" x 1 5/8" x 18GA	600S162-43	16" OC	2.316	0.772	16.68
18'-0"	6" x 2" x 18GA	600S200-43	12" OC	2.683	0.894	17.24
18'-0"	6" x 1 5/8" x 16GA	600S162-54	12" OC	2.860	0.953	30.33
18'-0"	6" x 2" x 16GA	600S200-54	16" OC	3.319	1.106	30.40
TRACKS						
BOTTOM TRACK	6" x 1 1/2" x 16GA	600T150-54	-	2.400	0.609	18.24
TOP TRACK	6" x 1 1/2" x 16GA	600T150-54	-	2.400	0.609	18.24
CAPPING TRACK	6" x 2" x 16GA	600T200-54	-	2.641	0.717	21.48

2. ALL STUDS AND TRACKS SHALL CONFORM TO ASTM A1003 OR A653.
   a. 18 GA AND LIGHTER: MINIMUM YIELD POINT OF 33 KSI.
   b. 16 GA AND HEAVIER: MINIMUM YIELD POINT OF 50 KSI.
   c. ALL STUDS AND TRACKS SHALL BE MANUFACTURED BY CURRENT MEMBERS OF THE STEEL STUD MANUFACTURERS ASSOCIATION (SSMA) LISTED IN ICC REPORT NO. ESR-3064P. ALL STUDS AND TRACKS SHALL COMPLY WITH ICC REPORT NO. ESR-3064P.
3. ALL FRAMING COMPONENTS SHALL BE CUT SQUARELY OR ON AN ANGLE (SUCH AS BRACING) TO SQUARELY FIT AGAINST ABUTTING MEMBERS. MEMBERS SHALL BE HELD FIRMLY IN POSITION UNTIL PROPERLY FASTENED.
4. STUDS AND TRACKS SHALL BE JOINED TOGETHER BY WELDING AND SHEET METAL SCREWS AS NOTED ON THE DRAWINGS.
5. MANUFACTURER PROVIDED PUNCH-OUTS MAY BE LOCATED ALONG THE CENTERLINE OF THE WEBS OF FRAMING MEMBERS. PUNCH-OUTS SHALL HAVE A MINIMUM CENTER-TO-CENTER SPACING OF 24". PUNCH-OUTS SHALL HAVE A MAXIMUM WIDTH OF HALF THE MEMBER DEPTH OR 2 1/2", WHICHEVER IS LESS, AND A MAXIMUM LENGTH OF 4 1/2". USE UNPUNCHED STUDS IF RESTRICTIONS ON LOCATIONS OF PUNCHOUTS CANNOT BE MET. PUNCH-OUTS IN TRACKS ARE NOT PERMITTED.
6. SPLICES IN STUDS AND BRACES SHALL NOT BE PERMITTED.
7. ALL FRAMING SHALL BE COORDINATED WITH GLAZING MANUFACTURERS, MECHANICAL, ELECTRICAL, PLUMBING AND OTHER TRADES.
8. PROVIDE 0.08" THICK x 1.1" SQ OR 1.425" ROUND WASHERS FOR ALL POWDER ACTUATED FASTENERS.
9. SEE DETAIL 1/S9-300 FOR TYPICAL COLD ROLLED CHANNEL (CRC) BRIDGING ATTACHMENTS AND SPLICES. BRIDGING MAY BE OMITTED WHERE GYPSUM WALLBOARD OR LATH OR PLYWOOD IS PROVIDED ON BOTH SIDES OF STUDS AND ATTACHED WITH FASTENERS AT 12" OC MAX ALONG THE FULL HEIGHT OF EACH WALL STUD.
10. SEE GENERAL STRUCTURAL NOTES ON S0.11 FOR OTHER INFORMATION.
11. FOR WALL CORNERS SEE 5/S9-30.

1 TYPICAL EXTERIOR PLATFORM FRAMED METAL STUD WALL FRAMING ELEVATION AND NOTES
NOT TO SCALE

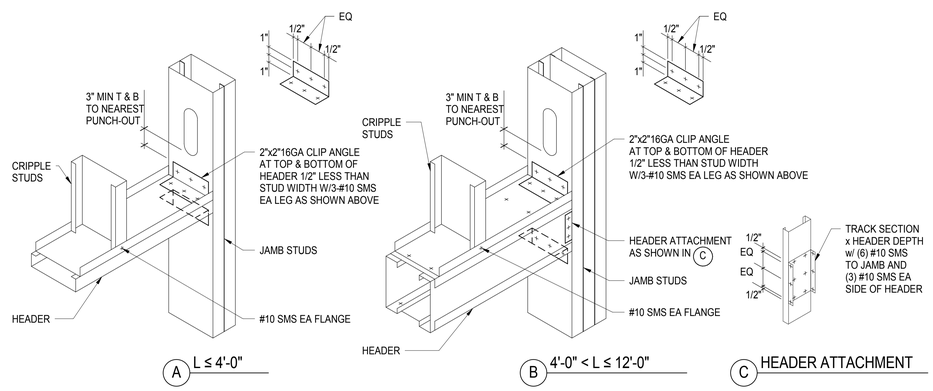

5 TYPICAL EXTERIOR HEADER AND JAMB CONNECTION
NOT TO SCALE

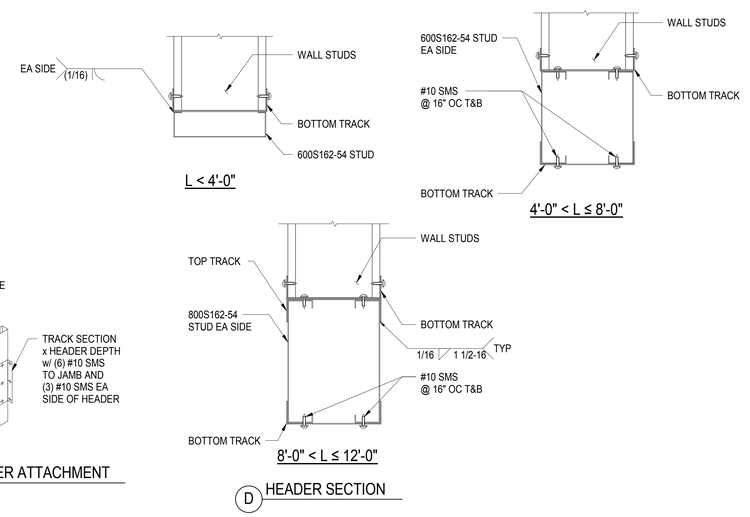

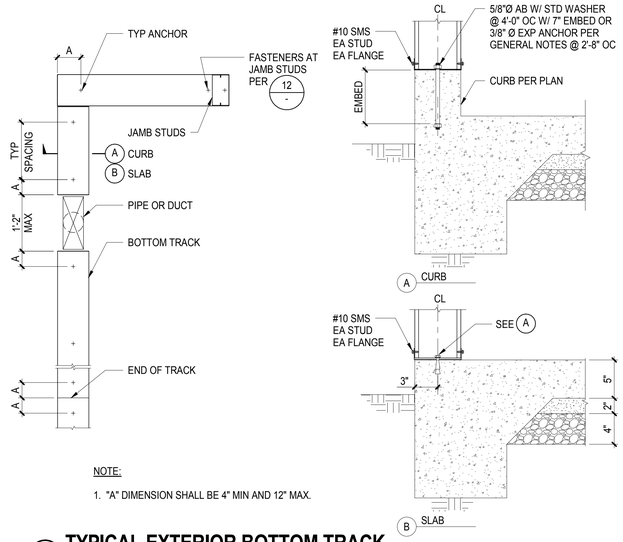

NOTE:
1. "A" DIMENSION SHALL BE 4" MIN AND 12" MAX.

8 TYPICAL EXTERIOR BOTTOM TRACK
NOT TO SCALE

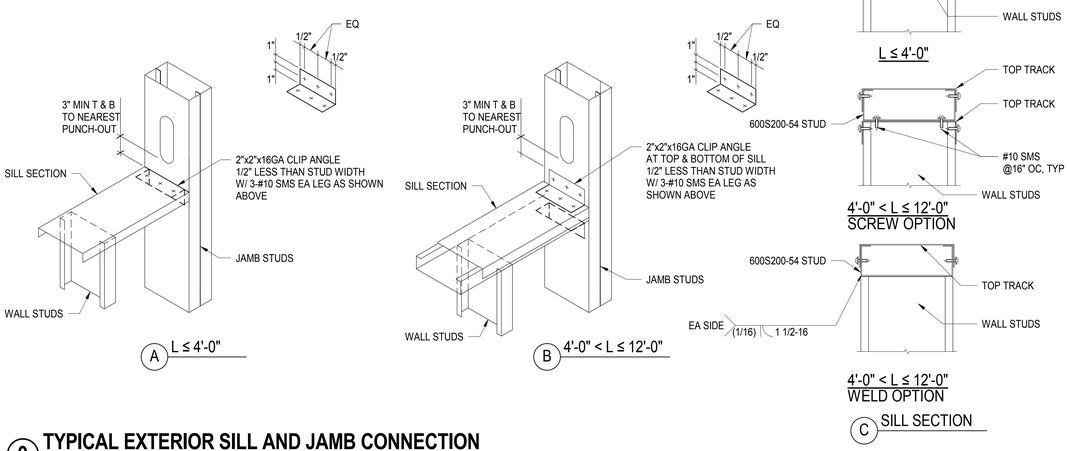

9 TYPICAL EXTERIOR SILL AND JAMB CONNECTION
NOT TO SCALE

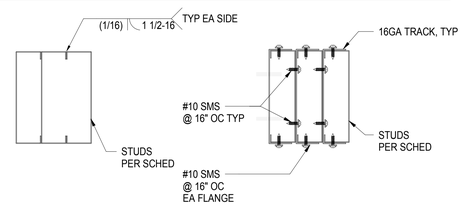

JAMB STUD SCHEDULE

MAX OPENING "L" OR COMBINED OPENING L1 + L2 AT ADJACENT OPENING	HT≤ 11'-0" STUDS	HT≤ 11'-0" CONN AT TOP TRACK	11'-0" < HT ≤ 18'-0" STUDS	11'-0" < HT ≤ 18'-0" CONN AT TOP TRACK
L ≤ 4'-0"	(2) 600S162-43 OR (1) 600JS250-33*	SL600*	(2) 600S162-43 OR (1) 600JS250-54*	SL600*
4'-0" < L ≤ 8'-0"	(2) 600S162-43 OR (1) 600JS250-33*	SL600*	(3) 600S200-43 OR (1) 600JS350-97*	SL600*
8'-0" < L ≤ 12'-0"	(3) 600S162-43 OR (1) 600JS250-43*	SL600*	(3) 600S162-68	SL600*

NOTE:
1. JAMB STUDS DEPTHS SHALL MATCH TYPICAL WALL STUD DEPTHS.
2. * DENOTES TSN (THE STEEL NETWORK) JAMB STUDS AND CLIPS.

11 TYPICAL EXTERIOR JAMB STUD SCHEDULE
NOT TO SCALE

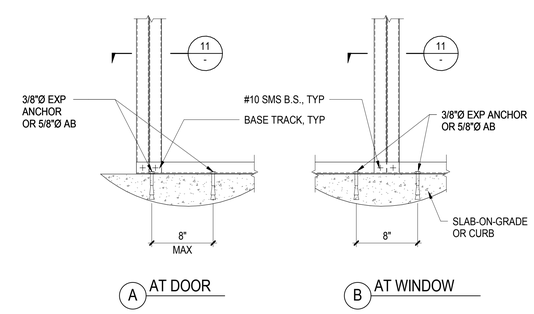

NOTES:
1. AT WALL ON CURB, CAN USE 5/8"Ø AB PER 8a/S9-100

12 TYPICAL BOXED STUD JAMB BASE
1 1/2" = 1'-0"

AXIS GFA
1130 WESTWOOD BLVD
LOS ANGELES, CA 90024
T 310.209.7520
F 310.209.7516
www.axisgfa.com

PROJECT NAME

Residence Inn® Marriott.

840 KILDARE STREET, LANCASTER, CA

OWNER:

INSITE REAL STATE DEVELOPMENT
6265 VARIEL AVENUE
WOODLAND HILLS, CA 91367

Thornton Tomasetti
Thornton Tomasetti, Inc.
707 Wilshire Blvd, Suite 4450
Los Angeles, CA 90017-3618
T 213.330.7000 F 213.330.7001

Project Status

REGISTERED PROFESSIONAL ENGINEER CHARLES GANTRE HANSEN No. S4416 Exp. 6/30/18 STRUCTURAL STATE OF CALIFORNIA

NO.	DATE	ISSUES AND REVISIONS	BY
	10.13.17	DESIGN DEVELOPMENT	
	11.20.17	CD PROGRESS SET	
	12.18.17	PLAN CHECK	
	02.16.18	PLAN CHECK	

DATE
SCALE AS NOTED
PROJECT NUMBER
COMPUTER FILE S17081
PROJECT NAME

DESCRIPTION
TYPICAL EXTERIOR METAL STUD DETAILS

SHEET NUMBER
S9.10

ALL DRAWINGS AND WRITTEN MATERIAL APPEARING HEREIN CONSTITUTE ORIGINAL AND UNPUBLISHED WORK OF THE ARCHITECT AND MAY NOT BE DUPLICATED, USED OR DISCLOSED WITHOUT WRITTEN CONSENT OF THE ARCHITECT

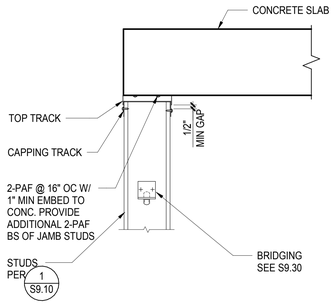

NOTE:

1. DETAIL 2 ON THIS SHEET MAY BE USED AS AN ALTERNATE.

1 TYPICAL TOP TRACK AT CONC SLAB
NOT TO SCALE

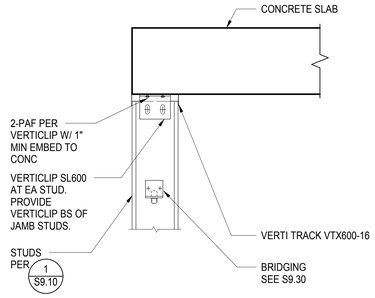

NOTE:

1. VERTI TRACK AND CLIP BY THE STEEL NETWORK.

2 ALTERNATE TOP TRACK AT CONC SLAB
NOT TO SCALE

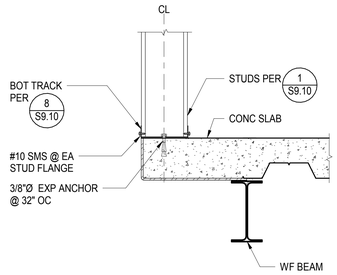

NOTE:

1. AT JAMB STUDS SEE 12 S9.10 .

3 TYPICAL BOTTOM TRACK AT CONC SLAB
NOT TO SCALE

AXIS GFA
1130 WESTWOOD BLVD
LOS ANGELES, CA 90024
T 310.209.7520
F 310.209.7516
www.axisgfa.com

PROJECT NAME

Residence Inn® Marriott.

840 KILDARE STREET,
LANCASTER, CA

OWNER:

INSITE REAL STATE DEVELOPMENT
6265 VARIEL AVENUE
WOODLAND HILLS, CA 91367

Thornton Tomasetti
Thornton Tomasetti, Inc.
707 Wilshire Blvd, Suite 4450
Los Angeles, CA 90017-3618
T 213.330.7000 F 213.330.7001

Project Status

REGISTERED PROFESSIONAL ENGINEER
CHANDAN GANTRU DRAKER
No. S4416
Exp. 6/30/18
STRUCTURAL
STATE OF CALIFORNIA

NO.	DATE	ISSUES AND REVISIONS	BY
	10.13.17	DESIGN DEVELOPMENT	
	11.20.17	CD PROGRESS SET	
	12.18.17	PLAN CHECK	
	02.16.18	PLAN CHECK	

DATE

SCALE AS NOTED

PROJECT NUMBER

COMPUTER FILE S17081

PROJECT NAME

DESCRIPTION
TYPICAL EXTERIOR METAL STUD DETAILS

SHEET NUMBER
S9.11

ALL DRAWINGS AND WRITTEN MATERIAL APPEARING HEREIN CONSTITUTE ORIGINAL AND UNPUBLISHED WORK OF THE ARCHITECT AND MAY NOT BE DUPLICATED, USED OR DISCLOSED WITHOUT WRITTEN CONSENT OF THE ARCHITECT

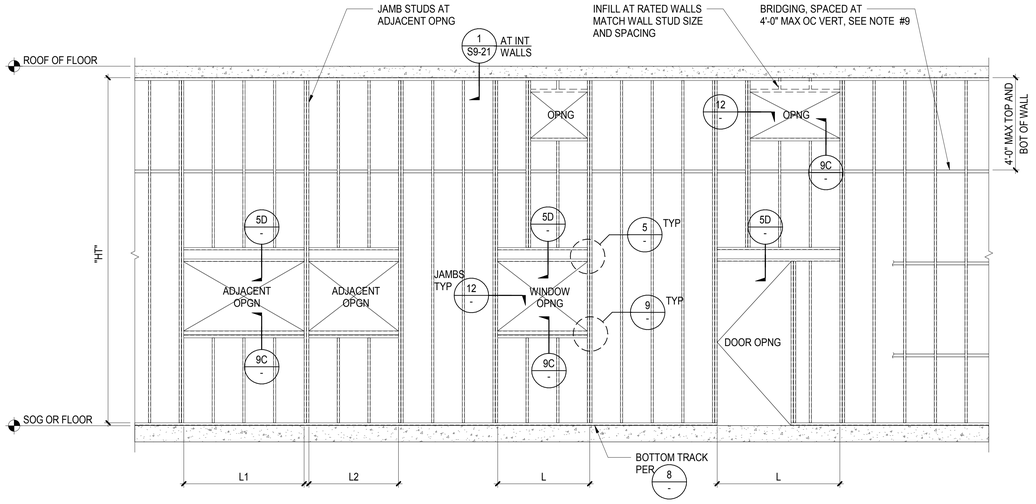

1. PROVIDE STUDS, TRACKS AND BRACING PER SCHEDULE BELOW:

METAL STUD SCHEDULE

REF: STEEL STUD MANUFACTURER'S ASSOCIATION (ER-4943P)

MAX. HEIGHT "H"	NOMINAL SIZE	SSMA PRODUCT IDENTIFICATION	SPACING (INCHES)	MINIMUM PROPERTIES Ix in^4	Sx in^3	Ma in-k
STUDS						
15'-0" FOR SILLS	3 5/8" x 20GA	362S125-33	16	0.415	0.201	3.96
	3 5/8" x 14GA	362S125-68	-	0.802	0.434	12.98
16'-0" FOR SILLS	4" x 20GA	400S125-33	16	0.523	0.231	4.56
	4" x 14GA	400S125-68	-	1.015	0.498	14.91
20'-0" FOR SILLS	6" x 20GA	600S125-33	16	1.391	0.408	8.06
	6" x 14GA	600S125-68	-	2.735	0.898	26.88
TRACKS						
BOTTOM TRACK	3 5/8" x 16GA	362T125-54	-	0.678	0.312	9.34
TOP TRACK	3 5/8" x 16GA	362T150-54	-	0.735	0.325	9.74
CAPPING TRACK	3 5/8" x 16GA	362T200-54	-	0.832	0.345	10.34
BOTTOM TRACK	4" x 16GA	400T125-54	-	0.849	0.359	10.74
TOP TRACK	4" x 16GA	400T150-54	-	0.918	0.374	11.19
CAPPING TRACK	4" x 16GA	400T200-54	-	1.037	0.397	11.88
BOTTOM TRACK	6" x 16GA	600T125-54	-	2.221	0.654	19.55
TOP TRACK	6" x 16GA	600T150-54	-	2.374	0.678	20.30
CAPPING TRACK	6" x 16GA	600T200-54	-	2.641	0.717	21.48

2. ALL STUDS AND TRACKS SHALL CONFORM TO ASTM A1003 OR A653.
   a. 18 GA AND LIGHTER: MINIMUM YIELD POINT OF 33 KSI
   b. 16 GA AND HEAVIER: MINIMUM YIELD POINT OF 50 KSI
   c. ALL STUDS AND TRACKS SHALL BE MANUFACTURED BY CURRENT MEMBERS OF THE STEEL STUD MANUFACTURERS ASSOCIATION (SSMA) LISTED IN ICC REPORT NO. ESR-3064P. ALL STUDS AND TRACKS SHALL COMPLY WITH ICC REPORT NO. ESR-3064P.
3. ALL FRAMING COMPONENTS SHALL BE CUT SQUARELY OR ON AN ANGLE (SUCH AS BRACING) TO SQUARELY FIT AGAINST ABUTTING MEMBERS. MEMBERS SHALL BE HELD FIRMLY IN POSITION UNTIL PROPERLY FASTENED.
4. STUDS AND TRACKS SHALL BE JOINED TOGETHER BY WELDING AND SHEET METAL SCREWS AS NOTED ON THE DRAWINGS.
5. MANUCATURER PROVIDED PUNCH-OUTS MAY BE LOCATED ALONG THE CENTERLINE OF THE WEBS OF FRAMING MEMBERS. PUNCH-OUTS SHALL HAVE A MINIMUM CENTER-TO-CENTER SPACING OF 24". PUNCH-OUTS SHALL HAVE A MAXIMUM WIDTH OF HALF THE MEMBER DEPTH OR 2 1/2", WHICHEVER IS LESS, AND A MAXIMUM LENGTH OF 4 1/2". SEE DETAIL 10/S9-300 FOR REQUIREMENTS WHEN HOLES ARE ADDED IN THE STUD WEB. PUNCH-OUTS IN TRACKS ARE NOT PERMITTED.
6. SPLICE IN STUDS AND BRACES SHALL NOT BE PERMITTED.
7. ALL FRAMING SHALL BE COORDINATED WITH GLAZING MANUFACTURER, MECHANICAL, ELECTRICAL, PLUMBING AND OTHER TRADES.
8. PROVIDE 0.08" THICK x 1.1" SQ OR 1.425" ROUND WASHERS FOR ALL POWDER ACTUATED FASTENERS.
9. SEE DETAIL 1/S9-300 FOR TYPICAL COLD ROLLED CHANNEL (CRC) BRIDGING ATTACHMENTS AND SPLICES. BRIDGING MAY BE OMITTED WHERE GYPSUM WALLBOARD OR LATH OR PLYWOOD IS PROVIDED ON BOTH SIDES OF STUDS AND ATTACHED WITH FASTENERS AT 12" OC MAX ALONG THE FULL HEIGHT OF EACH WALL STUD.
10. SEE GENERAL STRUCTURAL NOTES ON S0-001 FOR OTHER INFORMATION.
11. FOR WALL CORNERS, SEE 5/S9-30.
12. FOR STUD BACKING, SEE 3 &4/S9-30.

1 TYPICAL INTERIOR TYPICAL METAL STUD WALL FRAMING ELEVATION AND NOTES2

NOT TO SCALE

FRAMING ELEVATION

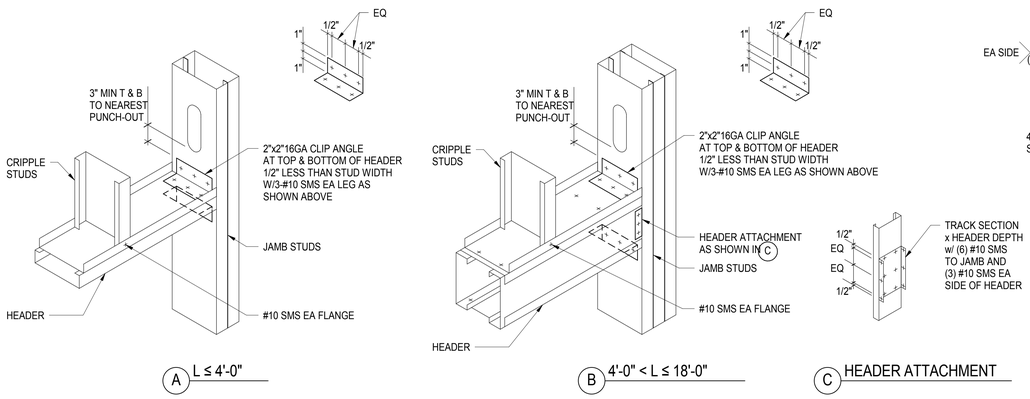

A L ≤ 4'-0"

B 4'-0" < L ≤ 18'-0"

C HEADER ATTACHMENT

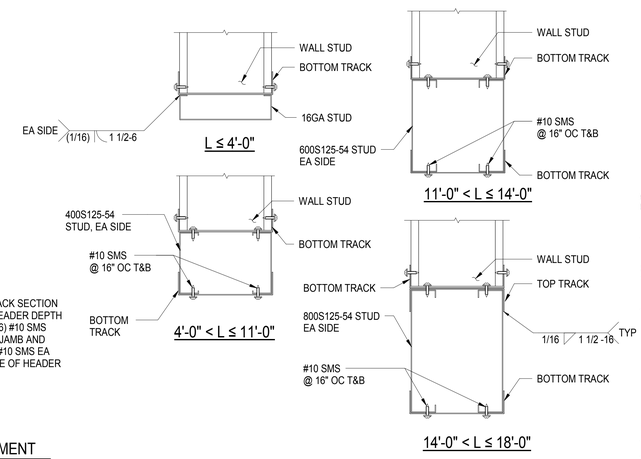

D HEADER SECTION

5 TYPICAL INTERIOR HEADER AND JAMB CONNECTION2

NOT TO SCALE

INTERIOR BOTTOM TRACK SILL ANCHOR SCHEDULE - NO CURB

ANCHOR TYPE	SIZE AND SPACING: SLAB-ON-GRADE	DECK AND FILL
ANCHOR BOLT	3/8"Ø @ 4'-0" OC W/ 3" EMBED	N.A.
EXPANSION ANCHOR*	3/8"Ø @ 4'-0" OC	3/8"Ø @ 4'-0" OC W/ 1 3/4" EMBED
SCREW ANCHOR*	3/8"Ø @ 4'-0" OC	N.A.
PAF	PAF @ 2'-8" OC W/ 1 1/4" EMBED	PAF @ 2'-8" OC W/ 1" EMBED

*EMBED PER GENERAL NOTES

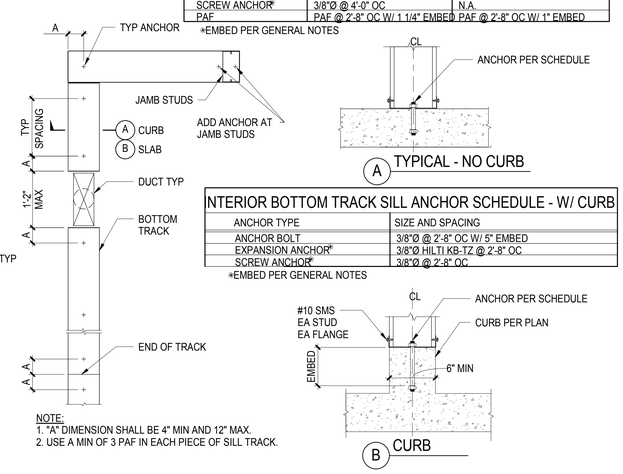

A TYPICAL - NO CURB

INTERIOR BOTTOM TRACK SILL ANCHOR SCHEDULE - W/ CURB

ANCHOR TYPE	SIZE AND SPACING
ANCHOR BOLT	3/8"Ø @ 2'-8" OC W/ 5" EMBED
EXPANSION ANCHOR*	3/8"Ø HILTI KB-TZ @ 2'-8" OC
SCREW ANCHOR*	3/8"Ø @ 2'-8" OC

*EMBED PER GENERAL NOTES

NOTE:
1. "A" DIMENSION SHALL BE 4" MIN AND 12" MAX.
2. USE A MIN OF 3 PAF IN EACH PIECE OF SILL TRACK.

B CURB

8 TYPICAL INTERIOR BOTTOM TRACK2

NOT TO SCALE

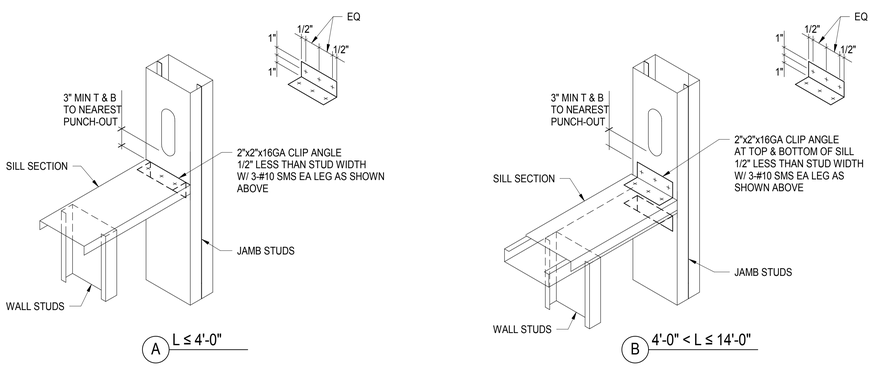

A L ≤ 4'-0"

B 4'-0" < L ≤ 14'-0"

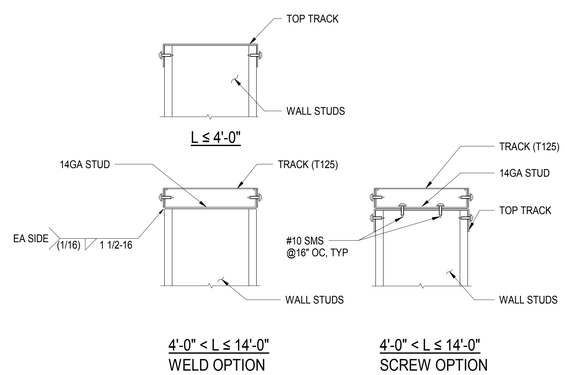

C SILL DETAILS

NOTE:
1. WHEN L > 14'-0", SEE 5/S9-201 FOR WALLS ON SLAB-ON-GRADE, AND 7/S9-201 FOR WALLS ON ELEVATED SLAB.

9 TYPICAL INTERIOR SILL AND JAMB CONNECTION2

NOT TO SCALE

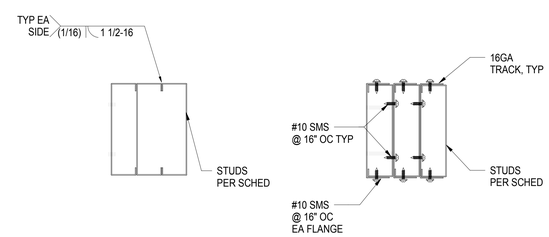

WELD OPTION

SCREW OPTION

JAMB STUD SCHEDULE

MAX ALLOWABLE OPENING WIDTH L OR COMBINED OPENING WIDTH L1 + L2 AT ADJACENT OPENING	STUDS
11'-0"	2-16GA STUDS
18'-0"	3-16GA STUDS

NOTES:
1. JAMB STUDS DEPTHS SHALL MATCH TYPICAL WALL STUD DEPTHS.
2. WHEN OPENING WIDTH IS GREATER THAN 14'-0" AND STORY "HT" IS GREATER THAN 14'-0", PROVIDE TOP TRACK REINF AT JAMB STUDS PER 8/S9.21

12 TYPICAL INTERIOR JAMBS2

NOT TO SCALE

AXIS GFA
1130 WESTWOOD BLVD
LOS ANGELES, CA 90024
T 310.209.7520
F 310.209.7516
www.axisgfa.com

PROJECT NAME

Residence Inn® Marriott.

840 KILDARE STREET,
LANCASTER, CA

OWNER:

INSITE REAL STATE DEVELOPMENT
6265 VARIEL AVENUE
WOODLAND HILLS, CA 91367

Thornton Tomasetti
Thornton Tomasetti, Inc.
707 Wilshire Blvd, Suite 4450
Los Angeles, CA 90017-3618
T 213.330.7000 F 213.330.7001

Project Status

REGISTERED PROFESSIONAL ENGINEER
DUNKAR GANTRI SINGH
No. S4416
Exp. 6/30/18
STRUCTURAL
STATE OF CALIFORNIA

NO.	DATE	ISSUES AND REVISIONS	BY
	10.13.17	DESIGN DEVELOPMENT	
	11.20.17	CD PROGRESS SET	
	12.18.17	PLAN CHECK	
	02.16.18	PLAN CHECK	

DATE

SCALE AS NOTED

PROJECT NUMBER

COMPUTER FILE S17081

PROJECT NAME

DESCRIPTION
TYPICAL INTERIOR METAL STUD DETAILS

SHEET NUMBER
S9.20

ALL DRAWINGS AND WRITTEN MATERIAL APPEARING HEREIN CONSTITUTE ORIGINAL AND UNPUBLISHED WORK OF THE ARCHITECT AND MAY NOT BE DUPLICATED, USED OR DISCLOSED WITHOUT WRITTEN CONSENT OF THE ARCHITECT

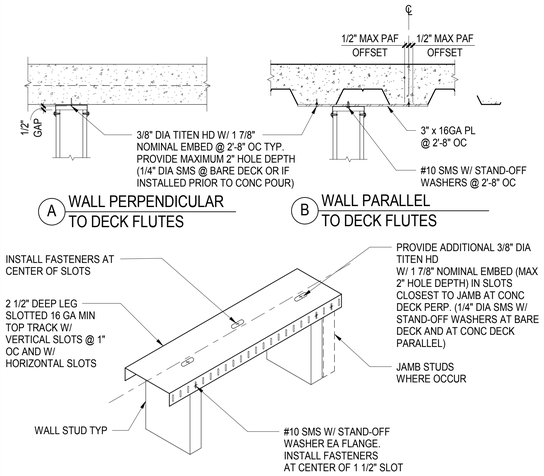

NOTE:
1. DETAIL 2 ON THIS SHEET MAY BE USED AS AN ALTERNATE DETAIL.
2. IF WALL HEIGHT "H" EXCEEDS 14'-0", USE DETAIL 8/-

1 TYPICAL INTERIOR TOP TRACK
NOT TO SCALE

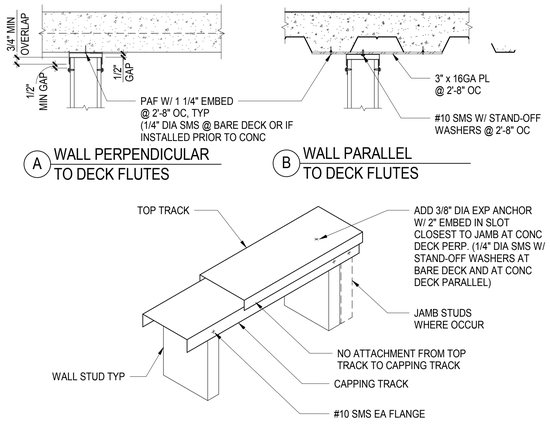

NOTE:
1. INSIDE DIMENSION OF OUTER TOP TRACK TO BE 1/8" MORE THAN STUD WIDTH.

2 ALTERNATE INTERIOR TOP TRACK2
NOT TO SCALE

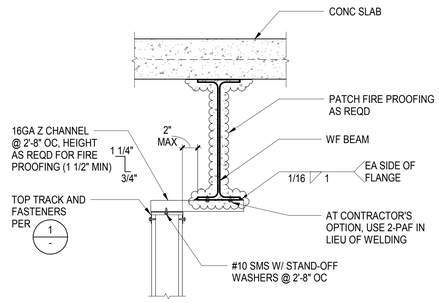

3 TYPICAL TOP TRACK AT WALL PARALLEL WF BEAM
NOT TO SCALE

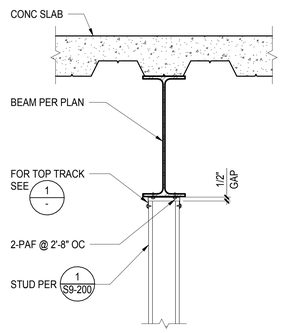

4 TYPICAL TOP TRACK AT WALL UNDER BEAM2
NOT TO SCALE

AXIS GFA
1130 WESTWOOD BLVD
LOS ANGELES, CA 90024
T 310.209.7520
F 310.209.7516
www.axisgfa.com

PROJECT NAME

Residence Inn® Marriott.

840 KILDARE STREET,
LANCASTER, CA

OWNER:

INSITE REAL STATE DEVELOPMENT
6265 VARIEL AVENUE
WOODLAND HILLS, CA 91367

Thornton Tomasetti
Thornton Tomasetti, Inc.
707 Wilshire Blvd, Suite 4450
Los Angeles, CA 90017-3618
T 213.330.7000 F 213.330.7001

Project Status

REGISTERED PROFESSIONAL ENGINEER
CHANDAN GANTRU DRAKER
No. S4416
Exp. 6/30/18
STRUCTURAL
STATE OF CALIFORNIA

NO.	DATE	ISSUES AND REVISIONS	BY
	10.13.17	DESIGN DEVELOPMENT	
	11.20.17	CD PROGRESS SET	
	12.18.17	PLAN CHECK	
	02.16.18	PLAN CHECK	

DATE

SCALE AS NOTED

PROJECT NUMBER

COMPUTER FILE S17081

PROJECT NAME

DESCRIPTION
TYPICAL INTERIOR METAL STUD DETAILS

SHEET NUMBER
S9.21

ALL DRAWINGS AND WRITTEN MATERIAL APPEARING HEREIN CONSTITUTE ORIGINAL AND UNPUBLISHED WORK OF THE ARCHITECT AND MAY NOT BE DUPLICATED, USED OR DISCLOSED WITHOUT WRITTEN CONSENT OF THE ARCHITECT

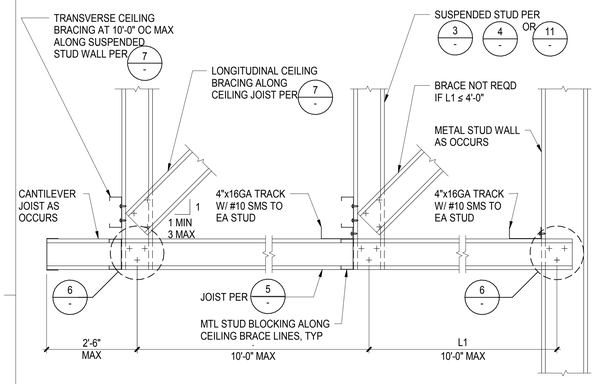

1 TYPICAL INTERIOR CEILING FRAMING2
NOT TO SCALE

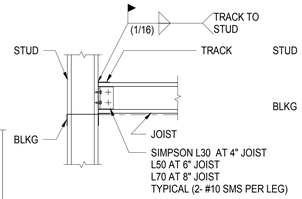

C JOIST INTO WALL

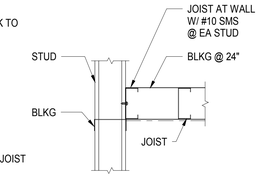

D JOIST PARALLEL TO WALL

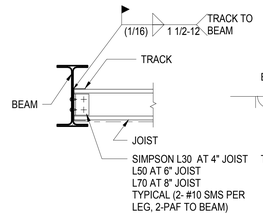

A JOIST INTO BEAM

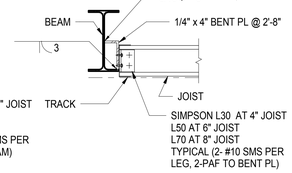

B JOIST INTO BEAM

C TRACK ATTACHMENT TO PLATE UNDER SLAB

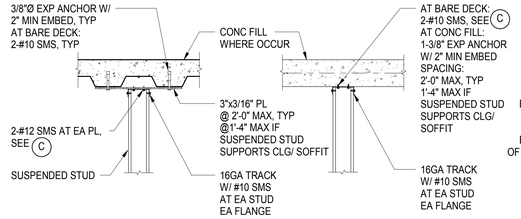

A WALL PARALLEL TO DECK FLUTES
B WALL PERPENDICULAR TO DECK FLUTES

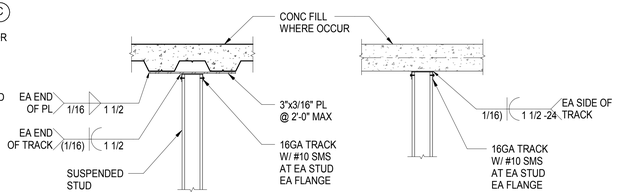

A WALL PARALLEL TO DECK FLUTES
B WALL PERPENDICULAR TO DECK FLUTES

1 TYPICAL INTERIOR CEILING FRAMING2
NOT TO SCALE

2 TYPICAL CEILING FRAMING CONNECTIONS
NOT TO SCALE

3 TYPICAL SUSPENDED STUD AT CONCRETE SLAB - SCREWED
NOT TO SCALE

4 TYPICAL SUSPENDED AT CONCRETE SLAB STUD - WELDED2
NOT TO SCALE

INTERIOR METAL STUD CEILING JOIST SCHEDULE						
NOMINAL SIZE	SSMA PRODUCT IDENTIFICATION	Ixx (IN^4)	Sxx (IN^3)	SPACING (IN)	MAX. SPAN (FT)	REMARKS
3 5/8" x 20GA	362S162-33	0.551	0.304	16	8'-6"	
3 5/8" x 18GA	362S162-43	0.710	0.392	16	10'-0"	
4" x 18GA	400S162-43	0.892	0.443	16	12'-0"	
6" x 18 GA	600S162-43	2.316	0.772	16	15'-0"	
8" x 16 GA	800S200-54	6.573	1.499	16	18'-0"	

NOTES:

1. JOIST AND TRACK DESIGNATIONS ARE BASED ON STEEL STUD MANUFACTURER'S ASSOCIATION (ICC ER-4943P).
2. DESIGN LOADS: DEAD LOAD = 9 PSF, LIVE LOAD = 10 PSF
3. SEE TYPICAL CEILING JOIST FRAMING DETAILS 1 AND 2 .
4. PROVIDE LONGITUDINAL AND TRANSVERSE BRACING PER 1 .

5 METAL STUD CEILING JOIST SCHEDULE2
NOT TO SCALE

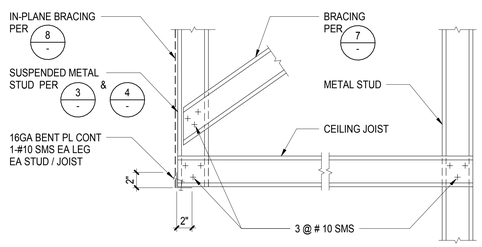

6 TYPICAL SOFFIT CONNECTIONS2
NOT TO SCALE

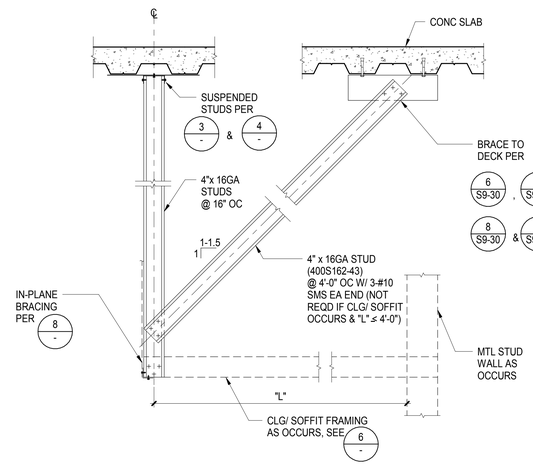

7 TYPICAL STUD BRACING2
NOT TO SCALE

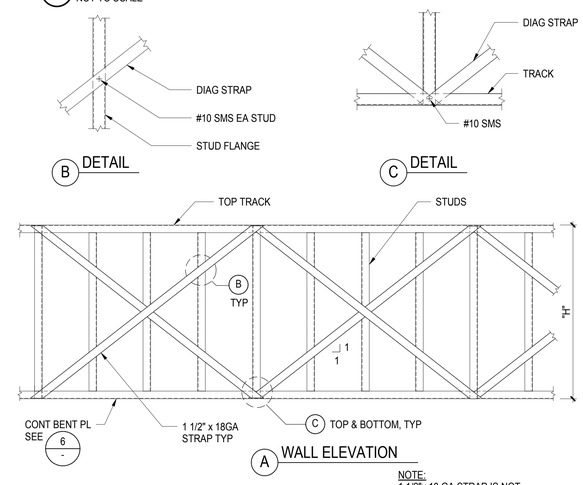

A WALL ELEVATION

NOTE:
1 1/2"x 18 GA STRAP IS NOT REQUIRED WHEN "H" IS LESS THAN 3'-0".

8 TYPICAL IN-PLANE BRACING2
NOT TO SCALE

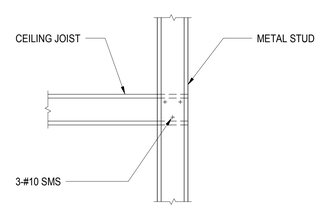

9 TYPICAL JOIST TO STUD CONNECTION2
NOT TO SCALE

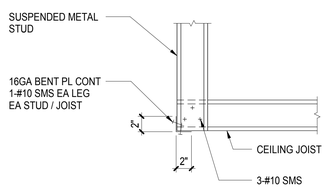

10 TYPICAL SOFFIT CORNER2
NOT TO SCALE

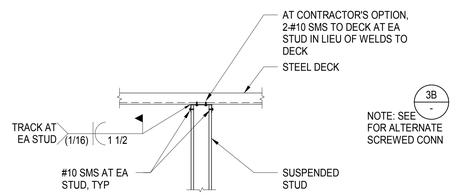

B WALL PERPENDICULAR TO DECK FLUTES

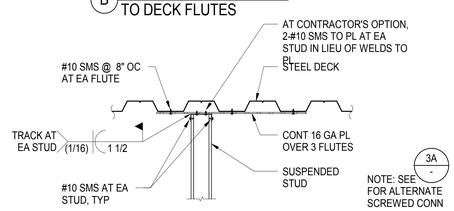

A WALL PARALLEL TO DECK FLUTES

11 TYPICAL SUSPENDED STUD AT STEEL DECK
NOT TO SCALE

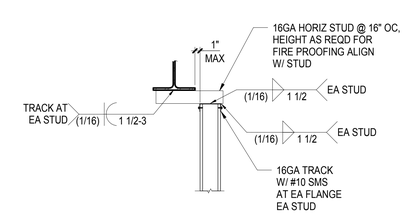

B WALL UNDER BEAM

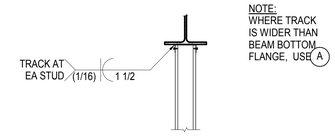

NOTE:
WHERE TRACK IS WIDER THAN BEAM BOTTOM FLANGE, USE A

A WALL UNDER BEAM

12 TYPICAL SUSPENDED STUD AT WF BEAM2
NOT TO SCALE

2 1/2" MIN

AXIS GFA
1130 WESTWOOD BLVD
LOS ANGELES, CA 90024
T 310.209.7520
F 310.209.7516
www.axisgfa.com

PROJECT NAME

Residence Inn® Marriott.

840 KILDARE STREET,
LANCASTER, CA

OWNER:

INSITE REAL STATE DEVELOPMENT
6265 VARIEL AVENUE
WOODLAND HILLS, CA 91367

Thornton Tomasetti
Thornton Tomasetti, Inc.
707 Wilshire Blvd, Suite 4450
Los Angeles, CA 90017-3618
T 213.330.7000 F 213.330.7001

Project Status

REGISTERED PROFESSIONAL ENGINEER
CHANDAN GANTRU TAMBERE
No. S4416
Exp. 6/30/18
STRUCTURAL
STATE OF CALIFORNIA

NO.	DATE	ISSUES AND REVISIONS	BY
	10.13.17	DESIGN DEVELOPMENT	
	11.20.17	CD PROGRESS SET	
	12.18.17	PLAN CHECK	
	02.16.18	PLAN CHECK	

DATE

SCALE AS NOTED

PROJECT NUMBER

COMPUTER FILE S17081

PROJECT NAME

DESCRIPTION
TYPICAL INTERIOR SOFFIT AND CEILING DETAILS

SHEET NUMBER
S9.22

ALL DRAWINGS AND WRITTEN MATERIAL APPEARING HEREIN CONSTITUTE ORIGINAL AND UNPUBLISHED WORK OF THE ARCHITECT AND MAY NOT BE DUPLICATED, USED OR DISCLOSED WITHOUT WRITTEN CONSENT OF THE ARCHITECT

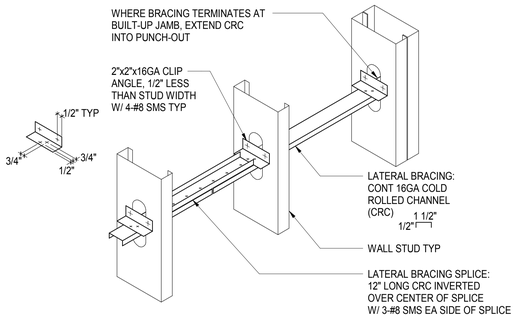

NOTES:

1. DETAIL 2/- MAY BE USED AS AN ALTERNATE.
2. IF STUD DEPTH IS GREATER THAN 6", USE DETAIL 2/- .
3. AT CONTRACTOR'S OPTION, IN LIEU OF 16GA CRC, USE EITHER OF (WITH SCREWS PER MANUFACTURER'S REQUIREMENTS):
   A. BRIDGECLIP BY THE STEEL NETWORK.
   B. SUBH/MSUBH BRIDGING CONNECTOR BY SIMPSON STRONG-TIE.

1 TYPICAL BRIDGING
NOT TO SCALE

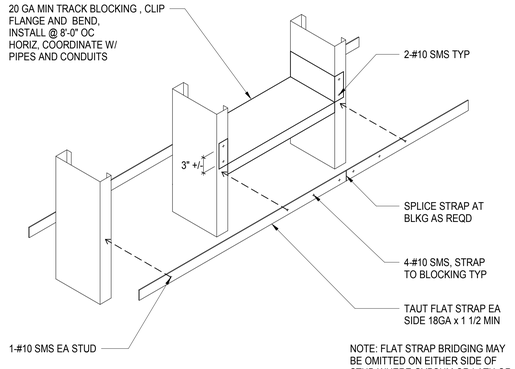

NOTE: FLAT STRAP BRIDGING MAY BE OMITTED ON EITHER SIDE OF STUD WHERE GYPSUM OR LATH OR PLYWOOD IS PROVIDED AND ATTACHED WITH FASTENERS AT 12" OC MAX ALONG THE FULL HEIGHT OF EACH WALL STUD

2 ALTERNATE BRIDGING
NOT TO SCALE

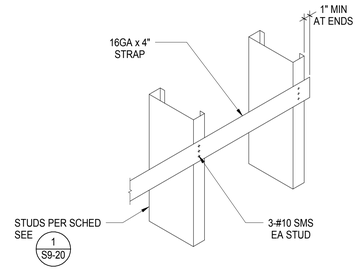

NOTES:

1. USE FOR MISC ITEMS (EG SURFACE MOUNTED MIRROR, WASTE RECEPTACLE, TOWEL DISPENSERS, WALL MOUNTED DOOR STOP, ETC.) MAX WT 40 LB/LIN FT LOAD.
2. VERIFY NUMBER, LENGTH, HEIGHT AND LOCATION OF BACKING PLATE REQUIRED WITH ACCESSORY MANUFACTURERS.
3. USE #12 SHEET METAL SCREWS MIN WHEN ATTACHING ITEM TO BACKING.
4. SEE 10/- FOR ALTERNATE BACKING PLATE DETAIL.

3 TYPICAL BACKING PLATE2
NOT TO SCALE

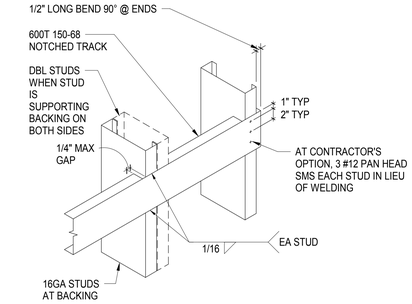

NOTES:

1. USE FOR UPPER WALL HUNG CABINETS, FULL HEIGHT CABINETS, GRAB BARS, HANDRAILS, WALL HUNG EQUIPMENT ETC. MAX WT 300LBS/LIN FT.
2. LENGTH, HEIGHT AND LOCATION TO SUIT ITEMS BEING FASTENED. SEE ANCHORAGE DETAIL OF SPECIFIC ITEMS FOR ADDITIONAL INFORMATION.
3. ATTACH TO THREE STUDS MIN (DBL STUD COUNTS AS ONE STUD).
4. USE #12 SHEET METAL SCREWS MIN WHEN ATTACHING ITEMS.
5. SEE 11/- FOR ALTERNATE BACKING STUD DETAIL.

4 TYPICAL BACKING STUD2
NOT TO SCALE

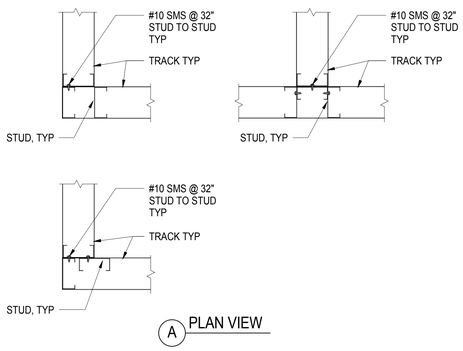

A PLAN VIEW

5 TYPICAL WALL CORNERS AND INTERSECTIONS2
NOT TO SCALE

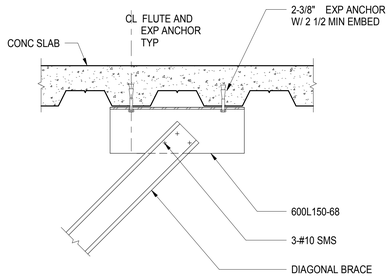

6 TYPICAL BRACE AT STEEL DECK WITH CONCRETE PERPENDICULAR TO DECK FLUTES
NOT TO SCALE

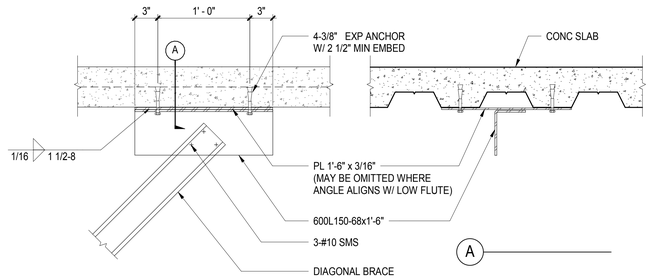

7 TYPICAL BRACE AT STEEL DECK WITH CONCRETE PARALLEL TO DECK FLUTES
NOT TO SCALE

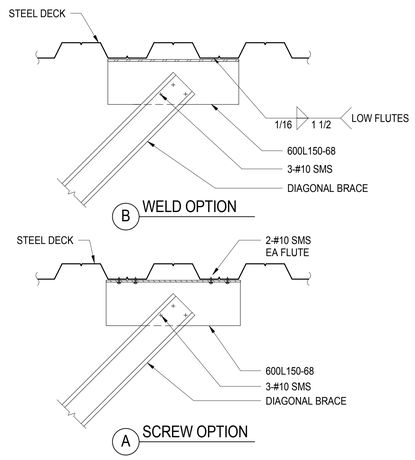

8 TYPICAL BRACE AT STEEL DECK WITHOUT CONCRETE PERPENDICULAR TO DECK FLUTES
NOT TO SCALE

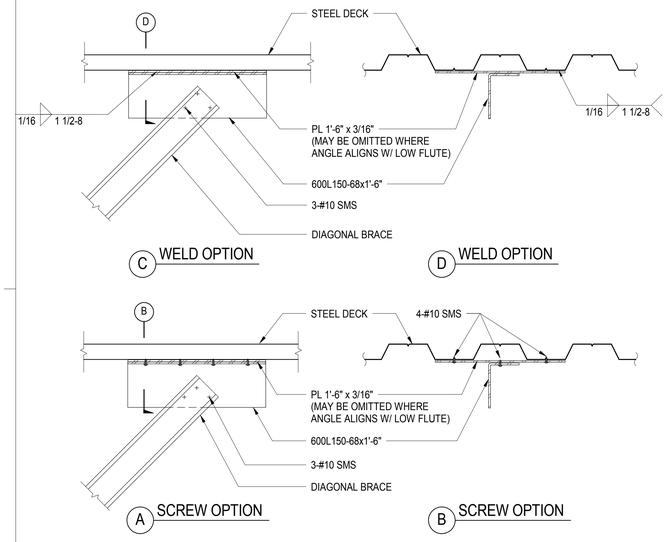

9 TYPICAL BRACE AT STEEL DECK WITHOUT CONCRETE PARALLEL TO DECK FLUTES
NOT TO SCALE

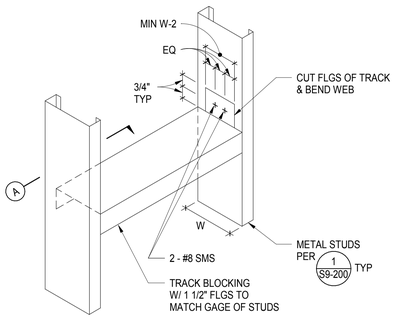

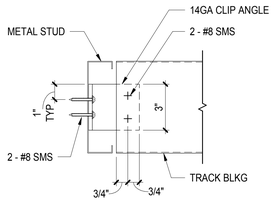

NOTES :

1. USE FOR MISC ITEMS (EG SURFACE MOUNTED MIRROR, WASTE RECEPTACLE, TOWEL DISPENSERS, WALL MOUNTED DOOR STOP, ETC) MAX WT 40 LB/LIN FT POINT LOAD.
2. VERIFY NUMBER, LENGTH, HEIGHT AND LOCATION OF BACKING PLATE REQUIRED WITH ACCESSORY MANUFACTURERS.
3. USE #12 SHEET METAL SCREWS MIN WHEN ATTACHING ITEM TO BACKING.

10 ALTERNATE BACKING PLATE2
NOT TO SCALE

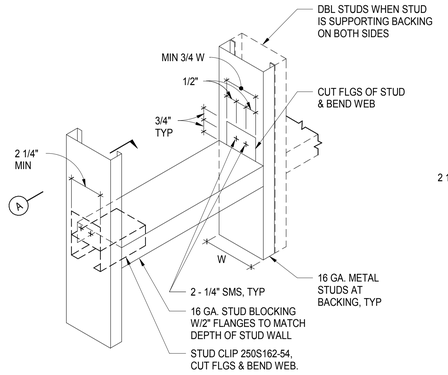

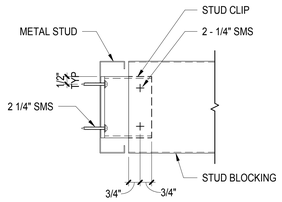

NOTES :

1. USE FOR UPPER WALL HUNG CABINETS, FULL HEIGHT CABINETS, GRAB BARS, HANDRAILS, WALL HUNG EQUIPMENT ETC. MAX WT 300LBS/LIN FT.
2. LENGTH, HEIGHT AND LOCATION TO SUIT ITEMS BEING FASTENED. SEE ANCHORAGE DETAIL OF SPECIFIC ITEMS FOR ADDITIONAL INFORMATION.
3. ATTACH TO THREE STUDS MIN (DBL STUD COUNTS AS ONE STUD).
4. USE #12 SHEET METAL SCREWS MIN WHEN ATTACHING ITEMS.

11 ALTERNATE BACKING STUD2
NOT TO SCALE

AXIS GFA

1130 WESTWOOD BLVD
LOS ANGELES, CA 90024
T 310.209.7520
F 310.209.7516
www.axisgfa.com

PROJECT NAME

Residence Inn® Marriott.

840 KILDARE STREET,
LANCASTER, CA

OWNER:

INSITE REAL STATE DEVELOPMENT
6265 VARIEL AVENUE
WOODLAND HILLS, CA 91367

Thornton Tomasetti
Thornton Tomasetti, Inc.
707 Wilshire Blvd, Suite 4450
Los Angeles, CA 90017-3618
T 213.330.7000 F 213.330.7001

Project Status

REGISTERED PROFESSIONAL ENGINEER GARNER GANIRE No. S4416 Exp. 6/30/18 STRUCTURAL STATE OF CALIFORNIA

NO.	DATE	ISSUES AND REVISIONS	BY
	10.13.17	DESIGN DEVELOPMENT	
	11.20.17	CD PROGRESS SET	
	12.18.17	PLAN CHECK	
	02.16.18	PLAN CHECK	

DATE

SCALE AS NOTED

PROJECT NUMBER

COMPUTER FILE S17081

PROJECT NAME

DESCRIPTION
TYPICAL METAL STUD DETAILS

SHEET NUMBER
S9.30

ALL DRAWINGS AND WRITTEN MATERIAL APPEARING HEREIN CONSTITUTE ORIGINAL AND UNPUBLISHED WORK OF THE ARCHITECT AND MAY NOT BE DUPLICATED, USED OR DISCLOSED WITHOUT WRITTEN CONSENT OF THE ARCHITECT

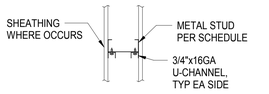

C PLAN

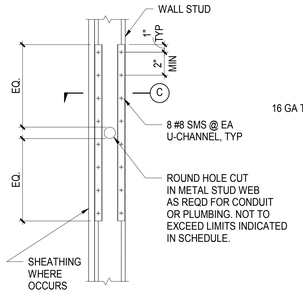

OPTION-1

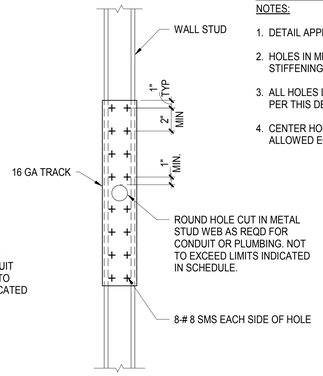

OPTION-2

A WHEN HOLE IS LARGER THAN MANUFACTURERS PUNCH-OUT REINFORCEMENT OF STUD

NOMINAL STUD SIZE	MAX HOLE SIZE
3 5/8"	2 1/8"
4"	2 1/2"
6"	4 1/2"

NOTES:

1. DETAIL APPLIES AT INTERIOR WALL STUDS ONLY.
2. HOLES IN METAL STUD SHALL BE CUT IN WEBS ONLY. FLANGES OR THE STIFFENING PROJECTION OF FLANGES SHALL NOT BE CUT.
3. ALL HOLES LARGER THAN THE PRE-PUNCHED HOLES SHALL BE REINFORCED, PER THIS DETAIL.
4. CENTER HOLE ON STUD WEB WHERE POSSIBLE, MAX HOLE OFFSET ALLOWED EQUAL 1/8".

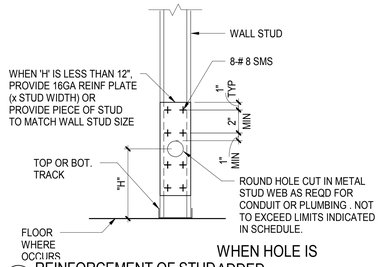

B WHEN HOLE IS REINFORCEMENT OF STUD ADDED AT END OF STUD

1 TYPICAL STUD REINFORCEMENT AT HOLES - INTERIOR STUDS ONLY2

NOT TO SCALE

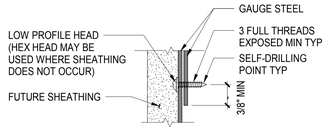

A STEEL TO STEEL

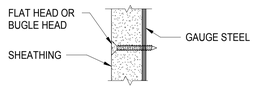

B SHEATHING TO STEEL

3 TYPICAL SHEET METAL SCREWS2

NOT TO SCALE

AXIS GFA

1130 WESTWOOD BLVD
LOS ANGELES, CA 90024
T 310.209.7520
F 310.209.7516
www.axisgfa.com

PROJECT NAME

Residence Inn® Marriott.

840 KILDARE STREET,
LANCASTER, CA

OWNER:

INSITE REAL STATE DEVELOPMENT
6265 VARIEL AVENUE
WOODLAND HILLS, CA 91367

Thornton Tomasetti

Thornton Tomasetti, Inc.
707 Wilshire Blvd, Suite 4450
Los Angeles, CA 90017-3618
T 213.330.7000 F 213.330.7001

Project Status

REGISTERED PROFESSIONAL ENGINEER
CHANDAN GANTRU DRAKER
No. S4416
Exp. 6/30/18
STRUCTURAL
STATE OF CALIFORNIA

NO.	DATE	ISSUES AND REVISIONS	BY
	10.13.17	DESIGN DEVELOPMENT	
	11.20.17	CD PROGRESS SET	
	12.18.17	PLAN CHECK	
	02.16.18	PLAN CHECK	

DATE

SCALE AS NOTED

PROJECT NUMBER

COMPUTER FILE S17081

PROJECT NAME

DESCRIPTION
TYPICAL METAL STUD DETAILS

SHEET NUMBER
S9.31

ALL DRAWINGS AND WRITTEN MATERIAL APPEARING HEREIN CONSTITUTE ORIGINAL AND UNPUBLISHED WORK OF THE ARCHITECT AND MAY NOT BE DUPLICATED, USED OR DISCLOSED WITHOUT WRITTEN CONSENT OF THE ARCHITECT